Attachment C

Impact of Potential Unbundling Requirements on SBC's Project Pronto Network Architecture

Various state commissions have conducted or are presently conducting proceedings that address CLEC efforts to unbundle SBC's Project Pronto infrastructure. These proceedings focus primarily upon one simple issue: the propriety of establishing a mandate that SBC must allow CLECs to use the Project Pronto network architecture to support any service that the CLECs desire. This one issue drives all CLEC requests, including their efforts to obtain line card "collocation" and the piece-part unbundling of Project Pronto. For example, CLECs are attempting to obtain the right to place any line card of their choice in SBC's Project Pronto Remote Terminals (RTs) in order to offer differentiated services that the Project Pronto architecture was not designed to efficiently support.

There are very real consequences associated with these CLEC unbundling proposals. First, any requirement that allows CLECs to place their own line cards in SBC's equipment and/or mandates that SBC provide any service, feature or function of the Project Pronto network architecture would add substantial costs to Project Pronto deployment. In fact, such costs are estimated to be so significant as to make SBC's ADSL service uneconomic, particularly as compared to competing broadband services such as cable modem service. Therefore, in light of such unbundling requirements, SBC would have no incentive to move forward with ongoing Project Pronto deployment. Second, in addition to the costs of supporting these alternatives, CLEC requests would serve to limit the availability of SBC's ADSL service over the architecture and/or serve to detrimentally impact the quality of service that could be provided over the Project Pronto infrastructure.

The additional costs that would be created by the CLECs' requests are driven by two factors: (i) stranded capacity created by CLEC line card collocation, and (ii) additional service provisioning costs created by CLEC provisioning of bandwidth-intensive services.

Stranded Capacity Costs

Allowing CLECs to "collocate" line cards in order to support differentiated services would result in stranded capacity in Project Pronto RT locations. Consider the example of one CLEC collocating one line card to offer a differentiated service. In the Project Pronto equipment, one line card is capable of supporting service to four end-users. However, if a CLEC were to collocate its own line card for the purpose of offering one end-user a differentiated service from SBC's ADSL service, that CLEC line card may not support the intended base of four end-user customers. Or, the line card may be capable of supporting four end-user customers, but may only be used to serve one end-user. The end result is the stranding of additional capacity that otherwise would be available in a particular slot in the RT and could have been used to provision additional ADSL service.

This is a direct and material opportunity cost to SBC. Whereas one slot in one RT previously could have supported four end-users, now this one slot serves potentially one end-user (unless and until the CLEC adds an additional customer). Given that each RT is limited to a finite number of slots, the result is a reduction in the number of end-users that could be served by the RT. In other words, the very goal behind SBC's Project Pronto investment – making ADSL service widely available to the mass market – would be fundamentally eroded by CLEC use of capacity to provide different services under a different product and marketing paradigm.

This effect is magnified by the fact that not every channel bank in a given Project Pronto RT site is wired to each and every Serving Area Interface (SAI) location subtending that RT site. As shown in the attached diagram, which illustrates the Project Pronto network architecture, an ADSL channel bank in a Project Pronto RT site is wired out to a particular SAI location, which serves numerous end-user customer premises. Because each Project Pronto RT site typically serves three-to-five SAI locations, in some instances it may be necessary for a CLEC to place cards in multiple channel banks to reach customers served by differing SAIs. The end result is a magnified loss in overall capacity.

The only way to compensate for this lost capacity would be for SBC to augment its network with additional capacity. However, these costs are so significant as to render the continued deployment of Project Pronto uneconomic. For example, in Illinois, where line card collocation was initially imposed on SBC,[1] the capital cost due to stranded capacity created by CLEC line card collocation was estimated to be in excess of $50 million. And this amount does not include the potential cost of system modifications to support CLEC line card collocation. The cost of stranded capacity, when spread across the projected demand for ADSL service throughout the state of Illinois, would have driven the cost of ADSL service over the Project Pronto architecture to prohibitive and uneconomic levels. In fact, the estimated additional capital costs to offset stranded capacity created simply by CLEC line card collocation, spread across the expected ADSL take rate for Project Pronto for all carriers in Illinois, could potentially more than double the cost of providing access to other CLECs. In real world terms, this would have driven the retail price to end-user customers for the ADSL service as provisioned over Project Pronto to more than $80 per month. Given that the going market rate for broadband Internet

[1] The Illinois Commerce Commission has since changed its position to not require CLEC line card "collocation" over Project Pronto.

access across the country is generally $50 or less per month, it is easy to see why SBC viewed the continued deployment of Project Pronto in Illinois as uneconomic in light of a line card collocation mandate.

Service Provisioning Costs

In addition to the stranded capacity costs created by CLEC line card collocation, CLEC-placed line cards would significantly increase SBC's service provisioning costs. There is a limited amount of bandwidth between the serving wire center and each Project Pronto RT site. A CLEC could quickly exhaust this limited capacity by offering bandwidth-intensive services that the Project Pronto architecture was not designed to efficiently support.

SBC has designed Project Pronto to offer mass market (primarily residential) end-users high-speed Internet access. By offering these end-users an Unspecified Bit Rate (UBR) quality of service, SBC is able to reduce the cost of the service by "oversubscribing" its network. Over-subscription takes advantage of the fact that residential end-users generally do not access the Internet and download content all at the same time. Therefore, while one end-user may be online and downloading content, another end-user may not. As a result, many more end-users can be provisioned service over the Project Pronto architecture than would otherwise be possible.

For example, as illustrated below, a given Project Pronto RT site is capable of provisioning ADSL service to approximately 672 end-users.[2] By providing a UBR quality of service, SBC can transport all 672 of those end-users ADSL service over the 135 Mbps of available bandwidth and still

[2] There are approximately 3 channel banks capable of providing ADSL service in a given Project Pronto RT site. Each channel bank contains 56 slots. Using the ADSL card that provides four ports, capable of serving four customers, per card, the total physical capacity of a given RT site in a typical

offer a robust, high bandwidth downstream service that is suited for the needs of mass market end-users. Therefore, by taking advantage of over-subscription, SBC can in many instances offer high speed Internet access to large numbers of end-users from each RT site.

In contrast, a business customer may require a Symmetrical DSL (SDSL) service that is provisioned at a Constant Bit Rate (CBR) quality of service, rather than a UBR quality of service. This is due to the fact that a business customer using SDSL usually does not want to share bandwidth with other end-users. As a result, a significant amount of bandwidth must be dedicated to each business customer.

For each business customer that is provided a CBR quality of service, the CLEC would utilize a substantial portion of the available bandwidth that could otherwise have been used to provision ADSL service for residential high-speed Internet access. Consider a situation in which a CLEC offers a 1.544 Mbps dedicated CBR service to a business customer. Simple math demonstrates that the largest number of end-users that could be served would be 135 Mbps (the finite amount of bandwidth provisioned by at each Project Pronto RT site) divided by 1.544 Mbps equals approximately 85 end-users. Thus, for each CBR service provisioned to a business customer, at whatever speed, there is a significant reduction in the available capacity for UBR services provisioned over the architecture.

---

configuration is 56 x 3 x 4 or 672 total ADSL customers in most instances. This is the current configuration supported by SBC.

The following graph illustrates how the shift to provide higher-level CBR services at particular volumes dramatically impacts the number of end-users that can be provided UBR service.

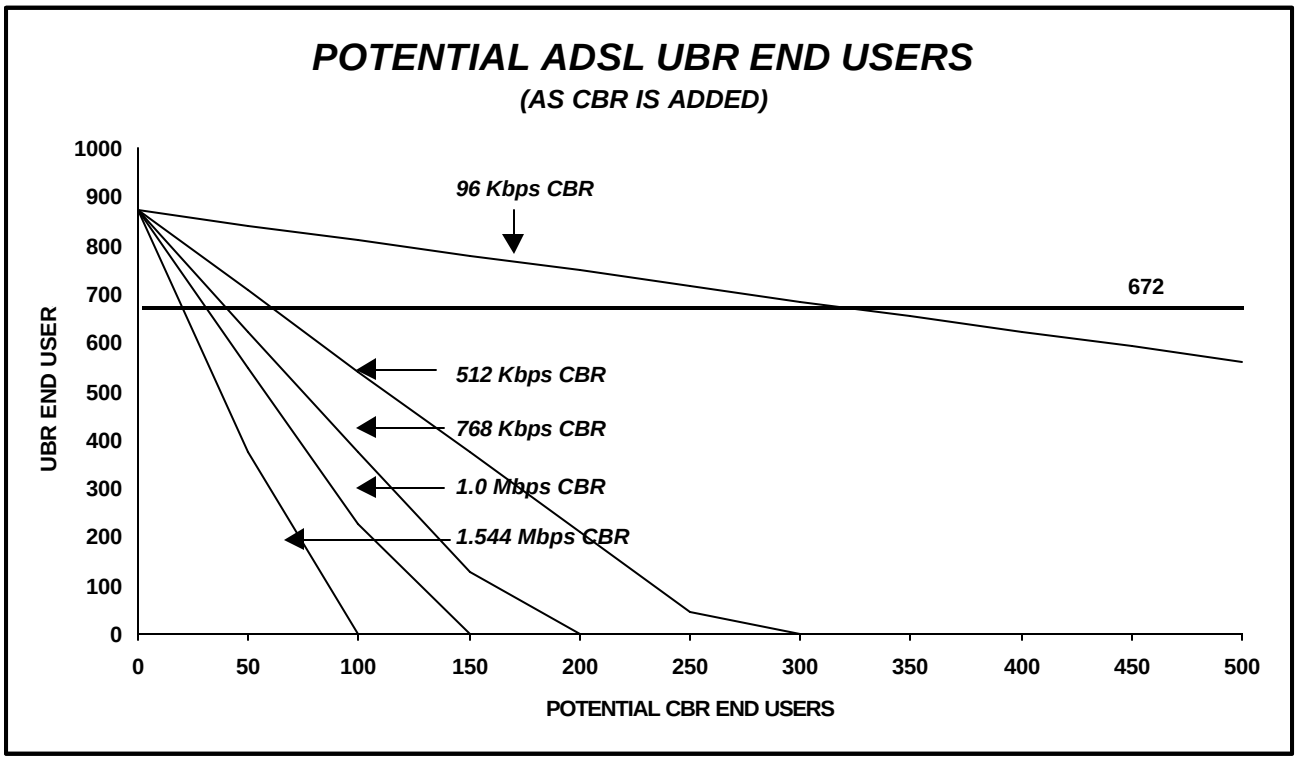

One of the fundamental economic principles underlying SBC's design of its Project Pronto architecture is the ability to over-subscribe the network. Lacking this ability, the end result would be greatly reduced availability of ADSL service to mass market end-users. As a result, the capital cost of the Project Pronto deployment would be spread across fewer end-users than had been planned. This, in turn, would lead directly to higher prices for ADSL service provided over the Project Pronto network architecture. Such a price increase could destroy the competitive viability of ADSL service in comparison to competing broadband services such as cable modem service. If SBC cannot compete with cable modem service, then it will not be economic to deploy Project Pronto.

Project Pronto

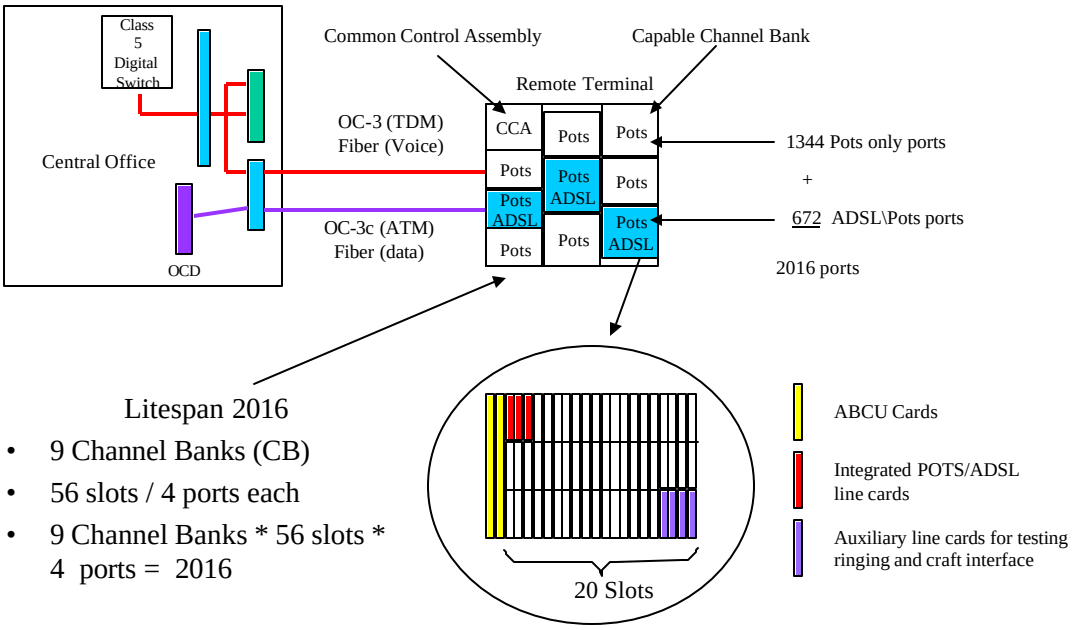

Litespan 2016

- 9 Channel Banks (CB)
- 56 slots / 4 ports each
- 9 Channel Banks * 56 slots * 4 ports = 2016
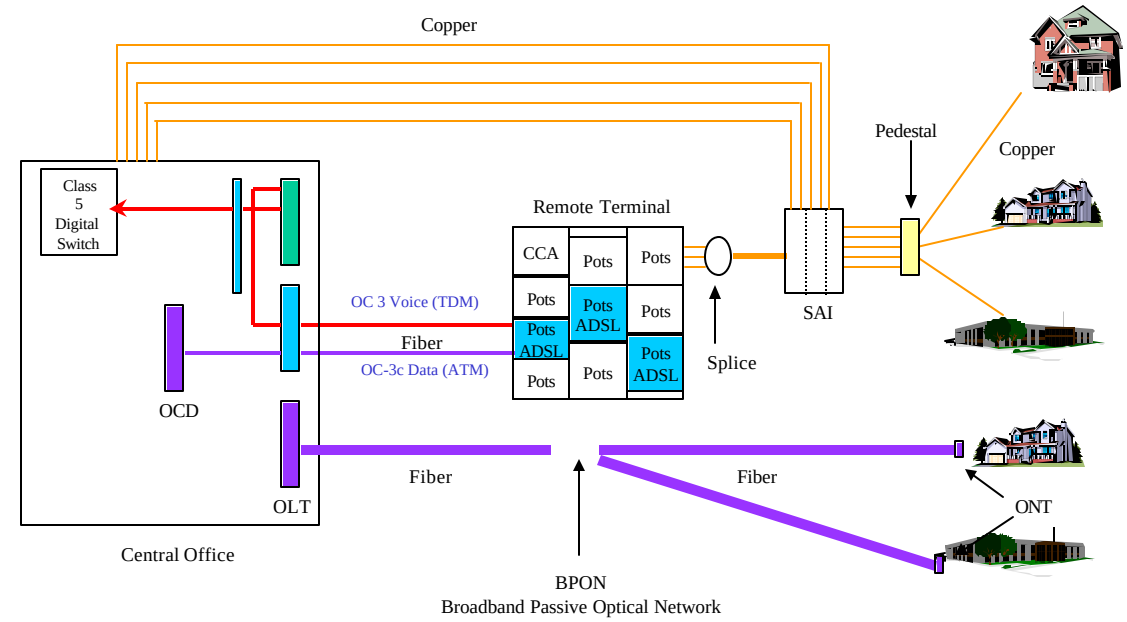
Project Pronto