high-capacity loops and transport. The Commission should also confirm that incumbent LECs must permit carriers to convert stand-alone loops from special access to UNEs. In addition, the Commission must eliminate co-mingling prohibitions, including ensuring that carriers may obtain unbundled loops even if they do not not terminate at a collocation arrangement but instead at a carrier point of presence. Finally, the Commission must establish a true quiet period – one that is long enough to give UNEs a chance to work.

A. The Commission Must End the ILEC Practice of Refusing to Provide UNEs Based on Claims of "Lack of Facilities" and Require Incumbent LECs to Attach Electronics in Order to Activate DS1 Loops

The Commission asks whether it has the authority to require incumbent LECs to engage in the activities necessary to activate DS1 loops that are not currently activated in the network, such as attaching any necessary electronics, and, if it has such authority, should the Commission use it and what should be the limits of such authority.[38/] Following the policy adopted by Verizon as expressed in the Pennsylvania 271 proceeding, the Commission suggests, for example, that it may not be reasonable to require an incumbent LEC to "engage in the construction of new outside plant," but it may reasonable to require use of spare port capacity on an existing multiplexer.[39/] For the reasons cited below, NewSouth contends that the Commission has ample authority to require incumbent LECs to attach the electronics necessary to derive high-

---

38/ Notice ¶ 52.

39/ *Id.* (citing the Commission's *Pennsylvania 271 Order*). As explained in the *Pennsylvania 271 Order*, Verizon's policy is that, when requisite electronics, such as line cards, have not been deployed but space exists for them in the multiplexers at the central office and end-user premises, Verizon will order and insert the line cards needed to provision the high capacity loop. If the spare facilities and/or capacity of those facilities are unavailable, Verizon will not provide the new facilities and equipment. In those instances, Verizon will only complete a competitor's order for high capacity loops from a special access tariff. Application of Verizon Pennsylvania Inc., Verizon Long Distance, Verizon Enterprise Solutions, Verizon Global Networks Inc., and Verizon Select Services Inc. for Authorization To Provide In-Region, InterLATA Services in Pennsylvania, CC Docket No. 01-138, *Memorandum Opinion and Order*, FCC 01-269, ¶¶ 91-92 (rel. Sept. 19, 2001) ("*Pennsylvania 271 Order*").

capacity loops and tranport, and that Verizon's suggestion is woefully insufficient. Instead, the Commission should require incumbent LECs to add equipment capacity required to fulfill a request for high-capacity loops to the same extent that the incumbent would add such capacity to fulfill a request for such capacity for one of its own retail customers, or to fill a special access order. More expansively, NewSouth submits that the Commission should utilize this proceeding to bring some much needed clarity to the issue of when network facilities should be considered available or "existing" so as to trigger the unbundling obligation. Incumbent LECs have taken an increasingly restrictive view on what it means for network facilities to be available. Incumbent LECs have argued that they are only required to unbundle existing facilities and are not required to construct new network facilities, by which they mean that a facility must already be fully in place between the exact locations requested by the competing carrier, and the necessary equipment must already be installed or "spare" capacity readily available.

The incumbents' position is predicated on an overly expansive reading of the Eighth Circuit's language concerning the so-called "superior network" rule and this Commission's conclusion that the incumbent's *transport* unbundling obligations are limited to "existing facilities." The Eighth Circuit held that "subsection 251(c)(3) implicity requires unbundled access only to an incumbent LEC's *existing* network – not to a yet unbuilt superior one."[40/] At the same time, however, the Eighth Circuit endorsed this Commission's determination that incumbent LECs must make modifications to their network necessary to enable access to unbundled network elements. The Commission too has held, albeit only expressly with respect to unbundled transport, that incumbent LECs are not required to "construct facilities to meet a requesting carrier's requirements where the incumbent LEC has not deployed transport facilities

---

40/ *AT&T Corp. v. Iowa Utilities. Bd.*, 120 F.3d 753, 813 (1999) (emphasis in original).

for its own use."[41/] A significant amount of litigation has occurred as a result of these limitations regarding what constitutes the incumbent LEC's "existing network" and when facilities should be considered "available" for purposes of fulfilling the incumbent LEC's unbundling obligations.

The questions raised in the Notice provide an opportunity to bring further certainty to these issues. The Commission should clarify what it means by "existing facilities" and what constitutes the "construction" of new network so as to avoid unbundling obligations. Specifically, the Commission should define "existing facilities" or "existing network" with reference to the incumbent LEC's facilities available in the existing service area where the request is being made, not just the facilities available for the specific origination and termination points for the unbundled network element being requested. This definition finds support in state and judicial proceedings addressing this issue.

For example, in *Ameritech Michigan v. BRE Communications, L.L.C.,*[42/] the District Court affirmed the Michigan Public Service Commission's ("PSC") finding that Ameritech's refusal to undertake certain loop construction work was unlawful. In that case, Ameritech claimed that it was not obligated to provide unbundled loops where "new construction" was required.[43/] Ameritech argued that requiring it to provide the unbundled loop in such circumstances was tantamount to requiring it to a build a superior, unbuilt network, in violation of the Eight Circuit's ruling.[44/]

41/ *UNE Remand Order* ¶ 324

42/ No. 99-CV-71180-DT, 2000 U.S. Dist. LEXIS 21402 (E.D. Mich. Jan. 4, 2002).

43/ For example, Ameritech claimed that it was not required to provide unbundled loops where loop components were not connected through to the customer, or where the customer was being served over an intergrated digital loop carrier system and no spare copper facilities were available and Ameritech must build a new loop facility. *BRE Communications,* 2000 U.S. Dist. LEXIS 21402, at *7-12.

44/ *BRE Communications*, 2000 U.S. Dist. LEXIS 21402, at *17-18.

The District Court disagreed. It affirmed the Michigan Commission's finding that Ameritech has existing facilities in the areas that BRE requested access, and that these facilities were designed to meet the ultimate service demand within that area. The Court held that "since Ameritech has an existing network of unbundled loops that can be used for unbundled loop access, it must provide BRE with access and make the unbundled loops 'available' *even if additional engineering and construction are necessary.*"[45/]

A similar result was reached by the Washington State Commission. In rejecting Qwest's restrictive reading of the scope of this Commission's language in paragraph 324 of the *UNE Remand Order* that an incumbent LEC's transport unbundling obligation is limited to "existing facilities," the Washington Comission wrote:

> "[T]he incumbent LEC is still required to provide access to UNEs within its network even if it must construct additional capacity within its network to make the UNEs available to competitors. Qwest implies that the term 'existing network' only applies to actual facilities that are in place, when in fact existing network applies to the 'area' (end offices, serving wire centers, tandem switches, interexchange points of presence, etc.) that Qwest's interoffice facilities serve. This same concept applies to the loop side of Qwest's network where Qwest is obligated to construct additional loops to reach customer premises whenever local facilities have reached exhaust. . . . Qwest [must] construct new facilities to any location currently served by Qwest when similar facilities to those locations have been exhausted. In situations outside of currently served areas, Qwest may construct facilities under the same terms and conditions it would construct similar facilities for its own customers in those locations."[46/]

Utilizing similar reasoning to that employed in the *BRE* case, the Michigan Commission also affirmatively answered the specific point raised in the Notice, *i.e.*, should the incumbent be

---

45/ *Id.* at *20-21 (emphasis added). The Court also found that Ameritech's imposition of special construction charges violated the non-discrimination obligations of section 251(c)(3) and deprived requesting carriers of a meaningful opportunity to compete because Ameritech did not impose the same special construction charges on its own customers. *Id.* at *23-26.

46/ *U.S. West Communications, Inc.*, Docket Nos., UT-003022, UT-00304, 13th Supplemental Order, 2001 WL 1672340, at *12 (Wash. U.T.C. July 24, 2001) (Qwest must provide unbundled dedicated transport capacity and "[i]n cases where capacity is limited or at exhaust, Qwest is required to either light additional fiber or change electronics to provide additional capacity in the same manner it would provide additional capacity for its own use").

required to attach additional electronics when the capacity of its existing equipment is exhausted. The Michigan PSC, in an order affirmed by the Michigan Court of Appeals, held that Ameritech must add capacity to multiplexing equipment in order to provide unbundled SONET service.[47] Much like Verizon's position in the Pennsylvania 271 case, Ameritech took the position that it would provide unbundled transport if spare slots were available, but it was not required to install additional bays if the capacity in existing bays was exhausted. Ameritech argued that, under Federal Communication Commission precedent, it is only required to unbundle existing transport facilities and that facilities do not exist if it must add more bays.[48]

The Michigan Commission and Court of Appeals correctly rejected Ameritech's narrow view of its unbundling obligations and concluded that Ameritech must add electronics, even if it means installing an additional bay in order to expand capacity. The Michigan PSC concluded that adding such capacity was not requiring Ameritech to supply a superior unbuilt network, but simply requiring access to Ameritech's existing network with a technology that Ameritech uses for its own purposes. It held that the 1996 Act "requires Ameritech Michigan to provide transport facilities of the type that are currently in use, even if that requires the installation of additional electronics at either end of the fiber."[49]

The Michigan Commission noted that Ameritech would install additional electronics if needed to serve its retail customers, and would install additional electronics if needed to fill a

---

[47] *See, e.g., WorldCom Technologies Inc., v. Ameritech Michigan,* Case No. U-12072, Opinion and Order, 2000 WL 363350, at *6 (Mich. P.S.C. March 3, 2000) ("*Michigan Order*"), *aff'd, Ameritech Michigan v. Michigan PSC & Worldcom Technologies, Inc.,* Nos. 226242, 229912, slip op., 2002 WL 99379 (Mich. App. Jan. 22, 2002).

[48] Ameritech also argued that adding more bays would violate the Eighth Circuit's decision that section 251(c)(3) requires access only to the existing network, "not to a yet unbuilt superior one." *See Michigan Order* at 2000 WL 363350, at *6 (citing *Iowa Utilities Bd.*, 120 F3d. at 813).

[49] *Id.* The Michigan Commission noted that Ameritech once shared this view but changed its policy somewhere in the early part of 1999.

special access order. The Commission held that its refusal to do so when necessary to fill UNE orders constituted unlawful discrimination, and "serves to hinder rather than promote the competition intended" by the 1996 Act.[50/] The Michigan Court of Appeals affirmed, holding that adding additional equipment capacity did not constitute the construction of new facilities so as to excuse Ameritech from having to provide unbundled transport.[51/] The court also affirmed the Michigan Commission's finding that Ameritech's refusal to increase capacity to fill UNE transport orders when it would add the same capacity to fill its own customers orders or a special access order constituted unlawful discrimination under the 1996 Act.[52/] The Washington State and Arizona Commissions have come to the same result, holding that Qwest must attach electronics necessary to provision high-capacity tranmission facilities.[53/]

This precedent is wholly consistent with the Commission's previous rulings and is solidly grounded in the goals and principles of the 1996 Act. The Commission has previously concluded that the definition of a loop includes (1) any conditioning necessary to enable the

---

50/ *Id.* at *6-7.

51/ *Ameritech Michigan v. Michigan PSC & Worldcom Technologies, Inc.*, Nos. 226242, 229912, slip op., 2002 WL 99379, at *3 (Mich. App. Jan. 22, 2002) (rejecting Ameritech's argument that "capacity was not available to fill MCI's orders for [unbundled transport] when all that was needed to increase capacity was to attach SONET equipment at the end of in-place fiber optic cable").

52/ *Id.* at *4 ("The evidence showed that while no significant difference existed between the effort required to add capacity to provide special access service and that required to add capacity to provide [unbundled transport], Ameritech routinely rejected MCI's orders for [unbundled transport] on the ground that needed capacity did not exist, while routinely filling orders for special access service, even when it was required to add capacity to do so.").

53/ *See U.S. West Communications Inc.*, Docket No. T-0000A-97-0238, Dec. No. 64216, 2001 WL 1672367, at *3 (Ariz. C.C. Nov. 20, 2001) (Arizona Corporation Commission holding that Qwest must attach electronics on unbundled dedicated transport, including electronics on transport link terminating in CLEC wire center); *U.S. West Communications, Inc.*, Docket Nos., UT-003022, UT-00304, 13th Supplemental Order, 2001 WL 1672340, at *14 (Wash. U.T.C. July 24, 2001) (Qwest must provide unbundled dedicated transport capacity and "[i]n cases where capacity is limited or at exhaust, Qwest is required to either light additional fiber or change electronics to provide additional capacity in the same manner it would provide additional capacity for its own use").

requesting carrier to provide high-capacity services over that loop – even if the incumbent LEC did not use the loop for such purposes; and (2) attached electronics (except DSLAMs), including multiplexing equipment used to derive loop transmission capacity.[54/] The Commission found that including electronics, such as those used to boost the loop's capacity to DS1 or higher levels, in the definition of the loop was consistent with the statutory definition of a network element, which includes all the features, functions and capabilities of the network element.[55/] Similarly, the Commission has defined high-capacity transport to include "all technically feasible capacity-related services, including those provided by electronics that are necessary components of the functionality of capacity-related services and are used to originate and terminate telecommunications services."[56/] Thus, the Commission has previously found that, in order to give meaning to the statutory requirement, unbundled network elements include all the capabilities and functions of that network element,[57/] the Commission has authority to define specific network elements to include the associated electronics necessary to derive the high-capacity functionality of that element.

Were the Commission to conclude that incumbent LECs are under no obligation to expand equipment capacity, requesting carriers would be restricted to competing for the incumbents' existing high capacity customers. Carriers like NewSouth, which seek to expand the services available to customers by combining their own switches with unbundled DS1 loops would be greatly restricted, undermining the Commission's goal of facilities based competition.

Moreover, as found by the state commissions and cases described above, the nondiscrimiation requirements of section 251(c)(3) would be violated if incumbent LECs refused

---

54/ *UNE Remand Order* ¶ 175, 190-91.
55/ *UNE Remand Order* ¶ 175-76.
56/ *UNE Remand Order* ¶ 323.
57/ 47 U.S.C. § 153(29).

to expand capacity to fill UNE orders but would expand capacity for their own customers or to fill special access orders. Indeed, Verizon admits to such discrimination when it stated that it provides expanded capacity only if the competing carrier orders a tariffed service.[58/]

In light of the preceding, NewSouth urges the Commission to adopt the following rules: (1) Incumbent LECs must attach electronics when spare slots are available (this is consistent with Verizon's policy as stated in the Pennyslvania 271 order and is the minium requirement); (2) Incumbent LECs must add capacity when existing slots are exhausted whenever and to the same extent such capacity would be added to fulfill retail orders or special access orders; and (3) Incumbent LECs must inform competing carriers when central office equipment is exhausted, where such capacity is available, and any plans to expand such capacity.[59/]

B. Competitive Carriers Must Be Allowed to Convert Stand-Alone Loops from Special Access to UNEs

Incumbent LECs contend that, because the Commission has established a framework for converting loop/transport combinations purchased as special access service to EELs, they have no duty to convert to UNEs stand-alone loops purchased from special access tariffs. There is no basis for incumbent LECs to refuse to convert stand-alone loops to UNEs. Essentially, the incumbent LECs argue that, by creating a framework for permissible EEL conversions, the Commission meant to exclude any other facility from conversion, even if there is no usage restriction on that facility. This is an incorrect reading of the Commission's orders.

The Commission was clear in the *UNE Remand Order* that usage restrictions do not apply to stand-alone loops, and it specifically rejected arguments that competing carriers should

---

58/ *Pennsylvania 271 Order* ¶ 91.

59/ *Ameritech Michigan v. Michigan PSC & Worldcom Technologies, Inc.*, Nos. 226242, 229912, slip op., 2002 WL 99379, at *3 (Mich. App. Jan. 22, 2002) (upholding the Michigan PSC decision requiring Ameritech to disclose the location of existing transport capacity and its plans to expand its transport capacity).

not be allowed to obtain as UNEs high-capacity (DS1 and higher) facilities that are obtainable via special access tariffs.[60] The Commission expressly found "no basis for placing a restriction on what services a carrier may offer using the loop network element."[61] The Commission also expressly distinguished between stand-alone loops, which would not be subject to any usage restrictions when substituted for special access, and EELs, which would be subject to such a restriction on a "temporary basis" while the Commission further analyzed the policy implications of converting special access facilities to EELs.[62] Although the Commission imposed a local usage restriction on EEL conversions, and established certain safe harbor tests for determining whether local usage requirement had been met, the Commission was always careful to note that such restrictions did not apply to stand-alone loops.[63] Indeed, in the *UNE Remand Supplemental Order Clarification,* the Commission clearly affirmed that the constraint that "IXCs may not *substitute* an incumbent LEC's unbundled loop-transport combinations for special access services unless they provide a significant amount of local usage" did not apply to "stand-alone loops."[64] In other words, although carriers could not substitute EELs for special access services, carriers could substitute stand-alone loops for special access services.

60/ *UNE Remand Order* ¶ 177 (rejecting US West's argument that the Commission should exclude from the definition of loops "facilities that underlie private lines and special access interconnection, because providing these services to competitors at lower-than-tariffed rates would 'promote regulatory arbitrage and serve no valid statutory or public purposes.'")

61/ *Id.*

62/ *Id.* The Commission made clear that carriers purchasing stand-alone loops may provide solely access services, or advances services such as xDSL, over that loop. *See id.* ¶ 487.

63/ *See* Implementation of the Local Competition Provisions of the Telecommunications Act of 1996, CC Docket No. 96-98, *Supplemental Order*, FCC 99-370, ¶ 5 (rel. Nov. 24, 1999) ("*UNE Remand Supplemental Order*") (reiterating that the local usage constraint did not apply to stand-alone loops).

64/ Implementation of the Local Competition Provisions of the Telecommunications Act of 1996, CC Docket No. 96-98, *Supplemental Order Clarification*, FCC 00-183, ¶ 8 & n.3 (rel. June 2, 2000) ("*UNE Remand Supplemental Order Clarification*") (emphasis added).

Incumbent LEC arguments that they are not required to convert stand-alone loops because the Commission has not created a process for such conversion ignore the fact that the Commission had no reason to establish such a process. Because there was no limitation on the types of telecommunications services that could be provided via a stand-alone loop, there was no reason for the Commission to establish a mechanism (apart from the existing, normal ordering and provisioning mechanisms applicable to any loop order) to ensure that the loop was being used for the proper purposes. There is thus no lawful basis, under existing Commission precedent, for incumbent LECs to refuse to convert stand-alone loops.

Nor is there any sound legal or policy rationale for precluding conversion of stand-alone loops from special access to unbundled element status. The 1996 Act entitles requesting carriers to obtain unbundled network elements if they are impaired without such access. Assuming the Commission determines that incumbent LECs must continue to provide DS1 loops, there is no basis for precluding carriers form obtaining that network element on an unbundled basis just because the network element is currently being purchased from a special access tariff. There certainly is no basis to permit the conversion of EELs but not stand-alone loops, particularly in such cases as with NewSouth where the loop is used, just as an EEL, to provide all the customer's telecommunications needs.

C. Co-mingling Restrictions Must be Eliminated

The Commission seeks comment on its current restrictions on the co-mingling of tariffed services with UNEs. The Notice identifies two such restrictions: (1) requesting carriers may not connect loop-transport combinations to the incumbent LEC's tariffed services, and (2) requesting carriers may not "combine" loop network elements or loop-transport combinations with tariffed

special access services.[65] NewSouth urges the Commission to remove such restrictions, which are a deterrent to competition and have no foundation in law or policy.

The co-mingling restrictions were originally designed to ensure that "IXCs" do not use UNEs to "bypass special access services"[66] (*i.e.*, dedicated, high-capacity facilities that run directly between the end user, usually a large business customer, and the IXC's point of presence.").[67] Obviously, if the Commission removes its usage restrictions and permits UNEs to be used for "special access services," the basis of the co-mingling restriction should be lifted.

The incumbent LECs, however, have expanded the co-mingling restriction far beyond its originally stated purpose and have used it as an excuse to preclude any combination of UNEs with tariffed services. This has had a particularly pernicious effect because incumbent LECs have often forced carriers to use special access facilities, particularly for transport and backhaul, and have, thereby, effectively eliminated the ability to obtain unbundled loops as well. For example, BellSouth refused to provide NewSouth with SONET ring transport as UNEs, arguing incorrectly that it had no obligation to provide SONET ring transport as a UNE. NewSouth was thus forced to purchase SONET ring transport from BellSouth's tariff. BellSouth then precluded NewSouth from obtaining local loops (facilities from the customer premises to the SONET ring) on the grounds that combing a UNE loop with special access transport would violate the Commission's co-mingling restriction. In other words, BellSouth was able to leverage its unlawful position that SONET ring transport need not be unbundled into a denial of unbundled local loops.

65/ *Notice* ¶ 34.

66/ *Supplemental Order Clarification* ¶ 28.

67/ *Supplemental Order Clarification* at n.36.

The co-mingling restrictions will have even more prenicious effects if the Commission determines to remove, for example, high capacity transport or other elements from the unbundling obligation. Carriers would often be required to obtain such transport from the incumbent LEC as a tariffed service given the lack of alternatives. Moreover, aggregating traffic onto higher capacity facilities provides efficiencies. The effect of removing high-capacity transport from unbundling obligations and retaining co-mingling restrictions would be to effectively remove the unbundling obligation for loops as well. Thus, at a minimum, the Commission must eliminate co-mingling restrictions if it removes high-capacity transport from unbundling obligations.

There is also no sound policy basis for the co-mingling restriction, especially for facilities-based carriers such as NewSouth, which are the sole provider of its customer's telecommunications needs. If NewSouth is impaired in its ability to offer services without access to local loops (including high-cap loops), such that incumbent LECs must continue to provide that element as a UNE, what possible basis could there be to preclude NewSouth from obtaining that local loop facility at cost-based rates just because the loop at some point is multiplexed onto special access transport? The incumbent LEC would receive special access rates for the special access component (*i.e.*, the transport); the UNE rate would apply only to local loop facility. Incumbent LECs may argue that their billing systems are bifurcated between special access and UNE facilities and it would thus be administratively burdensome to bill for both on what is in effect a single circuit. But the Commission has long held that unbundling obligations cannot be limited by concerns over issues such a billing difficulties.[68/]

[68/] UNEs must be provided where technically feasible. The Commissions' rules provide that the determination of technical feasibility "does not include consideration of . . . billing . . . concerns." 47 C.F.R. § 51.5.

D. Carriers Should be Able to Obtain Unbundled Local Loops Even if the Loop Does Not Terminate in a Collocation Arrangement

NewSouth is able to obtain a DS1 local loop network element as a UNE when the network element terminates at a NewSouth collocation arrangement in an incumbent LEC central office. NewSouth is unable to obtain a DS1 local loop network element as a UNE when the facility terminates in an incumbent LEC central office, but not in a NewSouth collocation arrangement. In the latter case, NewSouth must purchase the local loop network element as a tariffed service. In both cases, NewSouth is the customer's sole or predominant provider of local exchange service. In both cases, the loop facility terminates at a main distribution frame in the incumbent LEC's central office. In both cases, the loop facility is cross-connected and multiplexed onto a high capacity transport facility for backhaul to a NewSouth switch. There is no basis either in law or policy for treating exactly the same type of facility, used for exactly the same purpose, as a UNE in one instance but not in the other. Yet that is the situation NewSouth currently faces.

Most of the local loop network elements that NewSouth purchases from the incumbent LECs terminate at a NewSouth collocation. In these circumstances, the loop facility terminates at the main distribution frame in the incumbent LEC's central office. From there, the loop is cross-connected to equipment in NewSouth's collocation cage. The equipment in the collocation site multiplexes the DS1 onto a DS3 interoffice transport facility or SONET facility for backhaul to a NewSouth switch. (See Exhibit 2). (The incumbent LEC typically provides the backhaul if NewSouth's switch is within the same LATA as the collocated central office. If backhaul requires crossing a LATA boundary, NewSouth will utilize an interexchange carrier that is also collocated in the same central office.) Under this arrangement, NewSouth is able to obtain the

local loop facility (either a stand-alone DS1 loop or a DS1 EEL between the customer premises and the collocation site) as a UNE.

In other circumstances, the local loop network element (either a stand-alone loop or loop/transport combination) terminates at an incumbent LEC central office, but not in a collocation arrangement in that central office. Instead, the DS1 loop facility terminates at a NewSouth point of presence at the central office. In this scenario, the local loop facility terminates at the incumbent LEC's main distribution frame, where it is cross-connected to multiplexing equipment owned by the incumbent LEC. The incumbent LEC charges for the multiplexing from the incumbent LEC's tariff. From the multiplexing equipment, the facility is connected to a channel facility assignment (CFA) block where it is connected with an interoffice transport facility for backhaul to NewSouth's switch. The backhaul transport is typically provided by the incumbent LEC if intraLATA (often on a SONET ring); if interLATA backhaul is required, NewSouth will purchase the transport from an interexchange carrier that also has a point of presence in the central office. The CFA block acts as a point of presence for NewSouth in the incumbent LEC's central office and constitutes a point of demarcation between the incumbent LEC's local loop network element and the backhaul transport facility, whether the incumbent's backhaul transport facility or a third party's backhaul transport facility is used. The diagram at Exhibit 3 shows NewSouth Network Architecture with a loop terminated at a collocation arrangement and a loop terminated at a NewSouth POP. Under this arrangement, incumbent LECs refuse to provide the local loop element as a UNE.

There is no legal basis for such a distinction. The local loop facility in each case falls within the current definition of an unbundled local loop because in each case the element is a "transmission facility between a distribution frame (or its equivalent) in an incumbent LEC

central office and the loop demarcation point at an end-user premises."[69] Moreover, NewSouth is equally impaired without access to this network element, whether it terminates to a collocation arrangement or a point of presence. Yet, incumbent LECs have determined that NewSouth may not obtain the local loop facility as a UNE if NewSouth has not collocated in the central office. Requiring NewSouth to build collocation in order to access UNEs is contrary to the Commission's rules. Collocation is not the only mechanism available to access UNEs.[70] Incumbent LECs must provide *any* technically feasible method of access to UNEs. There is technical infeasibility with accessing local loop facilities at a point of presence as described above.

Nor is there any sound policy basis for distinguishing between a collocation arrangement and a point of presence. As noted above, NewSouth utilizes the local loop facility in exactly the same way whether the facility terminates in a central office where NewSouth has collocated or whether it terminates in a central office where NewSouth has established a point of presence. In either case, the customer served over the local loop facility receives all of its local services from NewSouth. In either case, NewSouth provides facilities-based service to the customer via NewSouth's voice and data platform. Moreover, requiring NewSouth to expand from a point of presence to a collocation arrangement solely to gain access to local loops forces NewSouth to undergo inefficient investment if there are an insufficient number of customers being served from the central office to justify the enormous expenditure for collocation.

69/ 47 C.F.R. § 51.319(a)(1).

70/ *See* 47 C.F.R. § 51.321(a-c) (requiring incumbent LECs to provide *any* technically feasible method of access to UNEs, including *but not limited to* collocation, meet point interconnection arrangements, or a previously successful method of interconnection or access) (emphasis added).

In order to eliminate the ability of incumbent LECs to impose this unnecessary restriction on obtaining local loop facilities, the Commission should confirm that requesting carriers may obtain access to the local loop unbundled element regardless of whether the loop terminates to a collocation arrangement in incumbent LEC central office or a point of presence. Additionally, the Commission should confirm that any incumbent LEC multiplexing equipment utilized with this loop facility should also be available as an unbundled network element. This should be the case under current rules because the multiplexing should constitute "attached electronics" to the loop facility.[71/] The Commission could avoid any controversy in the future, however, by stating expressly that multiplexing equipment constitutes "attached electronics." This modest change in the Commission's rules will further encourage facilities investment by switch-based carriers.

The Commission must also clarify that there are no co-mingling restrictions that would preclude a requesting carrier from obtaining UNE loops that terminate at a point of presence. One of the primary reasons that NewSouth has been unable to obtain this local loop facility as a UNE is because of incumbent LEC claims of co-mingling. This claim arises, for example, when the loop facility is connected to incumbent LEC backhaul from the central office to NewSouth's switch as a special access service. (As noted above, BellSouth has refused to provide access to SONET transport as a UNE and requires NewSouth to obtain such transport as a special access service). This claim of co-mingling is without merit because the local loop facility has terminated at the CFA block. NewSouth pays separately for the backhaul component. Moreover, there is no intermingling of "local" DS1s and "special access" DS1s on the transport component.

[71/] *See* 47 C.F.R. § 51.319(a)(1) (defining the loop to include all features, functions and capabilities of the loop, including attached electronics).

Even when the backhaul transport is purchased from a third party other than the incumbent LEC (typically because interLATA transport is required), the incumbent LEC still will not provide the loop facility as a UNE. The basis here is that NewSouth can only obtain the necessary multiplexing from the incumbent as a special access service. The incumbent LECs claim that they have no obligation to provide "stand alone" multiplexing as a UNE. Therefore, even if the loop facility (the facility from the customer premises to the main distribution frame) falls within the technical definition of unbundled loop, the incumbent LECs claim that they have no obligation to provide it as a UNE because it would be "combined" with the tariffed multiplexing service.

The Commission must end this game playing. It can do so by, as requested above, confirming that access to the multiplexing network element must be provided as a UNE. Barring that, the Commission must at least confirm that a carrier does not violate any co-mingling restriction by combining a UNE loop with tariffed multiplexing. The Commission must also confirm that requesting carriers may obtain a UNE loop that terminates at a point of presence, even if that loop is multiplexed onto an incumbent LEC's tariffed transport service.

E. To Promote Regulatory Certainty, the Commission Should Establish and Strictly Enforce a Five-Year Quiet Period During Which Efforts to Remove UNEs Should be Summarily Rejected

The Commission has recognized the importance of regulatory certainty in the marketplace.[72/] Unfortunately, the regulatory certainty that the Commission has sought to promote has not occurred. In some instances, the Commission has itself taken actions that undermine the regulatory certainty it strives to create. For example, the Commission established a three-year quiet period when it adopted the *UNE Remand Order*. The Commission stated it

---

72/ *See, e.g., UNE Remand Order* ¶ 150.

would not "consider petitions to remove elements form the national list immediately upon adoption of [the *UNE Remand Order*]," because doing so "would threaten the certainty that we believe is necessary to bring rapid competition to the greatest number of consumers.[73/] Notwithstanding this language, the Commission issued a Public Notice seeking comment on a Bell Operating Company petition to remove certain network elements from the national list. That petition was filed within a year of the effective date of some of those elements.[74/] By refusing to dismiss the petition summarily as violating the Commission's three-year quiet period, the Commission fostered exactly the type of market uncertainty it had hoped to remove.

In the Notice, the Commission asks whether the Commission should continue with a fixed period of review that bars the filing of petitions to remove unbundling obligations between cycles.[75/] NewSouth supports retention of the utilizing a periodic review process. The Commission, however, should modify the quiet period. The current three-year period was adopted because it coincided with the term of a typical interconnection agreement. A more relevant time period for business purposes is five years – which coincides with a typical business planning cycle. A five-year quiet period would provide greater market certainty and permit carriers to develop financial plans with assurance that UNEs would be available during the planning period. Whatever period the Commission selects, however, the Commission should adopt explicit language that it will consider no petitions to remove network elements until the next periodic review, and that it will summarily dismiss any such petition filed in the interim. Such a clear and unambiguous rule will go a long way toward promoting market certainty.

73/ *UNE Remand Order* ¶ 150.

74/ Joint Petition of BellSouth, SBC, and Verizon for Elimination of Mandatory Unbundling of High-Capacity Loops and Dedicated Transport, CC Docket No. 96-98 (filed April 5, 2001). NewSouth filed a motion to dismiss the petition as untimely and filed in violation of the Commission's three-year quiet period.

75/ Notice ¶ 77.

V. THE COMMISSION'S GENERAL FRAMEWORK FOR UNBUNDLING SHOULD BE RETAINED

The Commission's interpretation of the "necessary" and "impair" standards as set forth in the *UNE Remand Order* is appropriate and should be retained. The Commission's interpretation reasonably implements the Supreme Court's requirement that the Commission give substance to section 251(d)(2), taking into account the goals of the Act.

A. The Commission's Threshold Impairment Analysis Appropriately Focuses on Alternatives that Exist Outside the Incumbent LECs' Networks

The Commission interpreted the "impairment" requirement in section 251(d)(2) to require the Commission to consider whether, "taking into consideration the availability of alternative elements outside the incumbent's network, including self-provisioning by a requesting carrier or acquiring an alternative from a third-party supplier, a lack of access to that element materially diminishes a requesting carrier's ability to provide the services it seeks to offer."[76/] In making this "materially diminishes" determination, the Commission held that it would consider the factors of cost, timeliness, quality, ubiquity, and operational issues.[77/]

The Commission's analysis correctly focuses on the availability of alternatives to incumbent LEC network elements outside the incumbent LECs network, including the self-provisioning of those elements by new entrants. This analysis is entirely consistent with the Supreme Court's remand on this point. The Supreme Court concluded that Section 251(d)(2) requires the Commission, when determining what network elements must be unbundled, to take into account the objectives of the 1996 Act and give "some substance" to the "necessary and impair" requirements.[78/] In order to give "some substance" to those requirements, the Court

---

76/ *UNE Remand Order* ¶ 51.
77/ *UNE Remand Order* ¶¶ 72-100.
78/ *Iowa Utilities Bd.*, 525 U.S. at 392.

found that the Commission could not "disregard[] entirely the availability of elements outside the [ILECs'] network."[79/] The Court criticized the Commission's initial analysis which assessed impairment in terms of the availability of other unbundled network elements provided by the incumbent LEC. The Court found that the Commission could not, consistent with 1996 Act, "blind itself to the availability of elements outside the incumbent's network."[80/]

The Supreme Court's focus was thus on the availability of facilities *outside* the incumbent LECs' network. The Commission expressly recognized this fact in the *UNE Remand Order* when, in rejecting incumbent LEC arguments that the availability of tariffed services should limit the availability of UNEs, the Commission wrote that "[t]he Supreme Court requires us to compare the use of unbundled network elements with 'self-provisioning, or with purchase from *another provider.*'"[81/] It is thus appropriate that the Commission's primary effort in this proceeding is to collect evidence on the extent to which alternatives to incumbent LEC elements actually exist as a practical matter in the market.

B. The Commission Should Not Attempt to Assign Different Weight to Factors

The Commission does not suggest that it intends to modify this general standard. It does seek comment, however, on whether it should assign different weight to the factors used in its "materially diminishes" determination. It asks whether it should, for example, assign less weight to costs, citing to the Supreme Court's decision.[82/] There is nothing in the Supreme Court's opinion, however, which would justify assigning costs less weight. The Supreme Court did not hold that cost differences between utilizing UNEs or other alternatives should not be a relevant

---

79/ *Id.* at 392.

80/ *Id.* at 389.

81/ *UNE Remand Order* ¶ 70 (quoting *Iowa Utilities Bd.*, 525 U.S. at 384) (emphasis added by Commission).

82/ Notice ¶ 19 (citing *Iowa Utilities Bd.*, 525 U.S. at 389-90).

factor. The Court only admonished the Commission for concluding that *any* "increase in costs" demonstrates impairment. The Court was concerned that, for example, an "increase in costs" that had the effect of reducing an entrants' anticipated annual profits from 100% of investment to 99% of investment might be sufficient to satisfy the impairment standard as originally interpreted in the *Local Competition Order*.[83/]

Although a small diminution of profits may not be sufficient grounds for finding impairment, the question of whether a company can profitably enter a market is obviously pivotal. A critical ingredient to the question of profitability – and hence market entry – is the cost of providing service. Indeed, cost is the pre-eminent determinative of the pace and scope of competitive entry. As such, the Commission was correct to adopt cost as an important factor in assessing whether lack of access to a network element would materially diminish a carrier's ability to provide the services it seeks to offer. The Commission should therefore reject any suggestion that cost be given less weight than other factors. Giving cost less weight than other factors ignores market realities and is clearly not required by the Supreme Court decision. If the Commission is inclined to weight various factors, it should, if anything, assign more weight to costs than to other factors. NewSouth demonstrates above in Section III the extent to which it would be impaired due to the increased costs it would incur if it lost the ability to use UNEs.

VI. THE COMMISSION SHOULD USE CAUTION IN EMPLOYING GRANULAR IMPAIRMENT ANALYSIS

The Notice seeks comment on a variety of questions designed to address whether unbundling obligations may be imposed on a more granular basis. The Commission asks whether it should conduct its impairment analysis on a market-by-market or service-by-service basis, or whether UNEs should be differentiated by facility type. It also seeks comment on

83/ *Iowa Utilities Bd.*, 525 U.S. at 390.

whether the type of customer being served or the type of carrier doing the serving is relevant to the impairment analysis.

NewSouth appreciates the Commission's efforts to assess impairment in a more granular fashion. There is an intuitive appeal to such an approach – as the extent of alternatives available outside the incumbent LECs' network, should vary around certain parameters. The questions for the Commission are what are those parameters, is there any administratively workable level of granularity that results in material variations, and what are the costs of such an approach in terms of market certainty, regulatory uniformity, and resource utilization. NewSouth believes that the answer to these questions suggest that an effort to utilize granular approaches should be used with great caution. NewSouth believes that any effort to establish, by rule, predetermined categories within which unbundling would not be required is impractical. Rather, the Commission should assess the evidence that will be provided in this proceeding. If such evidence demonstrates that there are sufficient alternatives outside the incumbent LEC's network within a specific category of service or product or location, then the Commission may preclude unbundling within that category.

A. Impairment Should Not Be Determined on a Service-by-Service Basis

Determining that UNEs are available for some services but not for others raises significant legal questions. Section 251(c)(3) provides that incumbent LECs have a duty to provide unbundled network elements to "any" requesting carrier for the "provision of a telecommunications service." The Commission suggests that, notwithstanding this unambiguous directive that incumbent LECs must make UNEs available to any requesting carrier for the provision a telecommunications service, the language of 251(d)(2) supports, if not compels, a service-by-service analysis. Section 251(d)(2) provides that, in deciding which network

elements must be unbundled for purposes of 251(c)(3), the Commission must assess whether failure to provide the network element would impair the ability of the telecommunications carrier "to provide the services it seeks to offer." The clause "to provide the services it seeks to offer" should not be read as a source of limitation. The Commission previously held that the term "services" as used in 251(d)(2) is coextensive with the term "telecommunications services" found in section (c)(3).[84/] Although section 251(d)(2) is, on the whole, a limitation on the general unbundling obligation set forth in section 251(c)(3), it is not a limitation on the types of services that may be provided over a network element. The impairment analysis is not predicated on types of services, but rather on which *network elements* must be made available. Network elements are defined as facilities and equipment, and their functionalities and capabilities, not on the nature of services that would run over them. The legal infirmities in adopting a service-by-service approach have been amply demonstrated in the record incorporated into this proceeding.[85/]

Apart from the legal infirmities of a service-by-service analysis, there are a host of practical and administrative difficulties. Adoption of such an approach initially requires a determination of the relevant service categories. The Commission, for example, asks whether it should adopt the service categories defined in the Act.[86/] The Act defines, for example, telecommunications service,[87/] telephone exchange service,[88/] exchange access,[89/] telephone toll

---

84/ *UNE Remand Order* ¶ 81.

85/ *See, e.g.,* Comments of Comptel, CC Docket No. 96-98 (filed April 5, 2001); Comments of AT&T Corp., CC Docket No. 96-98 (filed April 5, 2001).

86/ Notice ¶ 37.

87/ 47 U.S.C. § 153(46).

88/ 47 U.S.C. § 153(47).

89/ 47 U.S.C. § 153(16)

service,[90] and mobile service.[91] The latter four services are all types of telecommunications service and the Commission has held that mobile service providers provide telephone exchange and exchange access service.[92] These overlapping definitions suggest that delineating the appropriate service will be problematic.

The pitfalls of failing to define the service category with precision is amply demonstrated by the Commission's "temporary" ban on converting "special access" service to EELs. Although the Commission appeared to be concerned about special access services, it used the term "special access service" and "exchange access service" in the *Supplemental Clarification Order* seemingly interchangeably, even though they are not coterminous.[93] Special access service, moreover, is not a statutorily defined term and the failure to precisely define what constitutes special access service for purposes of the impairment analysis has engendered much confusion. One reason for the confusion is that incumbent LECs equate any facility purchased from special access tariffs with a special access service, even though those facilities are used for multiple purposes. Incumbent LECs have also sought to use the terms special access service and private line service interchangeably, even though they are not the same services.[94] As a result of the ambiguities, incumbent LECs have successfully avoided providing UNEs for a host of purposes or services.

Even if the definitional issues could be resolved, the focus on services provides little useful information on the extent of available alternative *facilities*. Unbundled network elements, particularly loop and transport elements, are highly fungible with respect to the types of services

---

90/ 47 U.S.C. § 153(48).
91/ 47 U.S.C. § 153(27).
92/ *Local Competition Order* ¶ 1004.
93/ *See, e.g., Supplemental Order Clarification* ¶ 2-3.
94/ Comments of United States Telecom Association, CC Docket No. 96-98 at 5-6 (filed April 5, 2001).

that can be provided over the element. NewSouth, for example, utilizes high-capacity (DS1) loops and high-capacity (DS1 to DS 3) transport to provide all of the various types of services it offers. NewSouth markets services designed to meet a customer's total telecommunications and information technology needs. Thus, it will provide local services and, where requested, it will be the customer's long distance service provider as well, for both intraLATA and interLATA toll traffic. NewSouth also offers data services, such as high-speed Internet access, high-speed data transmission, and various ancillary services such as web hosting and video conferencing. All of these services are provided over same unbundled loop or loop/transport combination. Alternatives to the incumbent LEC loop and transport facilities that NewSouth utilizes for these various services are either available or not, regardless of the services that NewSouth provides. Focusing on which set or subset of services NewSouth provides over the facilities yields precious little information on whether alternatives network elements exist.

NewSouth's example also highlights the administrative impracticalities of assessing impairment on a service-by-service basis. As noted, NewSouth runs a number of different services over the same incumbent LECs' unbundled loop or transport facilities. Would a determination that it was not impaired with respect to one of those services (data services for example) mean that NewSouth could not obtain the element as a UNE, even though lack of access to that UNE would impair NewSouth in the provision other services running through the same pipe (such as telephone exchange services)? Also, what happens if the customer adds a service that the Commission has determined is not impaired? Must the loop then be converted to special access? What if the customer cancels an "unimpaired" service, leaving only impaired services? May NewSouth convert the facility back to a UNE at that point? Who will keep track? Would requesting carriers bear the cost of transferring the same network element from one

regulatory designation to another as the mix of services provided over the facility changes over time? These questions highlight the folly of attempting to define impairment based on the service the carrier seeks to provide with the facility, rather than on the extent of alternative facilities.

B. The Commission Should Not Try to Predetermine Markets in Which Carriers Will Not Be Impaired

As noted, the Commission suggests various types of more granular analysis, such as location, or facility or customer type. All of these forms of granularity raise difficult issues of administrative practicality and enforcement. Indeed, it was difficulties such as these that previously led the Commission to adopt a national list of UNEs, with only certain discrete exceptions, such as the switch carve-out.

Rather than establish, by rule, rigid categories for impairment analysis, the Commission should analyze the evidence of actual marketplace alternatives (as it intends to do) and, if that evidence demonstrates lack of impairment with respect to a particular category, the Commission can then preclude unbundling of the relevant network elements within that category. The Commission should, however, make that determination in this proceeding. The worst possible outcome for the industry would be for the Commission to announce certain market parameters within which it or state commissions would continually review the impairment question. It would be virtually impossible for a business to plan in such an environment. Moreover, given the vastly superior resources of the incumbent LECs, they could effectively hamper competitors with an onslaught of proceedings.

C. The Commission Should Avoid Using Proxies

NewSouth also urges the Commission avoid attempting to define proxies as a surrogate for alternatives in the marketplace in order to resolve the administrative difficulties involved in

actual market-by-market analysis, such as the proxy adopted in the *Pricing Flexibility Order.* There, the Commission relaxed regulation over special access and dedicated transport rates on the theory that sufficient competition existed to restrain anticompetitive behavior. Sufficient competition is presumed to be present whenever at least one collocator relies on transport facilities provided by a transport provider, other than the incumbent LEC, in specified percentages of central offices within an MSA. The Commission found that the existence of a collocator almost always implied that the competitor had installed transmission facilities to compete with the incumbent LEC.[95/]

The collocation-based triggers established in *Pricing Flexibility Order* provide no basis for determining that competitive carriers are impaired without access to UNEs, particularly the local loop. At most, these collocation-based triggers provide information on the extent to which at least one other carrier has installed a collocation arrangement and obtained non-ILEC transport facilities to an IXC POP. The trigger provides no information on the availability of "line side" loops (including "line side" transport as part of an EEL) –or transport to locations other than an IXC POP. Indeed, as the Commission recognized in the *Pricing Flexibility Order*, competitors will initially install "trunk side" transmission facilities (from the collocation to an IXC POP), not "line side" facilities.[96/] Thus, the existence of collocators found sufficient for *Pricing Flexibility* provides no evidence on the extent of alternative local loop facilities.[97/]

95/ Access Charge Reform, CC Docket Nos. 96-262, 94-1, 98-157, *Fifth Report and Order and Further Notice of Proposed Rulemaking*, FCC 99-206, ¶ 82 (rel. Aug. 27, 1999) ("*Pricing Flexibility Order*").

96/ *Pricing Flexibility Order* ¶ 102.

97/ The Commission also recognized that its collocation triggers did not equate with an open local market. It noted that competition may have developed sufficient to warrant pricing flexibility, but not enough to demonstrate compliance with the section 271 checklist. *Pricing Flexibility Order* ¶ 89.

This is consistent with NewSouth's experience. While there are some carriers collocated in the same central offices as NewSouth, none of these carriers are able to provide facilities between the central offices and NewSouth's customers.

Simply adding up all the collocators in a central office provides is an even less accurate indicator of UNE alternatives. NewSouth is collocated in a number of central offices but has no loop or transport facilities of its own. It thus could not be counted as a potential source of alternatives. Indeed, the Commission recognized that carriers that collocate simply to obtain access to the local loop, like NewSouth or like DSL providers such as Covad, are not a source of transport competition since they rely on incumbent LEC transport.[98/]

VII. CONCLUSION

The Commission should not pull the rug out from under carriers who are working hard to make the 1996 Act's promise of local competition a reality. The continuing availability of unbundled network elements is critical to the establishment of facilities-based competition and to promote the deployment of advanced services to consumers. The Commission should take this opportunity to reinvigorate local competition. It can do so by reconfirming what will be obvious on the face of this record – carriers continue to be impaired without access to unbundled network elements.

98/ *Pricing Flexibility Order* ¶ 82.

Respectfully Submitted,

NEWSOUTH COMMUNICATIONS

/s/ Jake E. Jennings

Jake E. Jennings
Vice President – Regulatory Affairs
NewSouth Communications
NewSouth Center
Two N. Main Center
Greenville, SC 29601
864/672-5877

Michael H. Pryor
Christopher R. Bjornson
Mintz, Levin, Cohn, Ferris, Glovsky
and Popeo, P.C.
701 Pennsylvania Avenue, N.W.
Suite 900
Washington, D.C. 20004
202/434-7300

Counsel to NewSouth Communications

April 5, 2002

WDC 312231v2

Exhibit 1

Customer Premises Equipment

Customer Premise Equipment

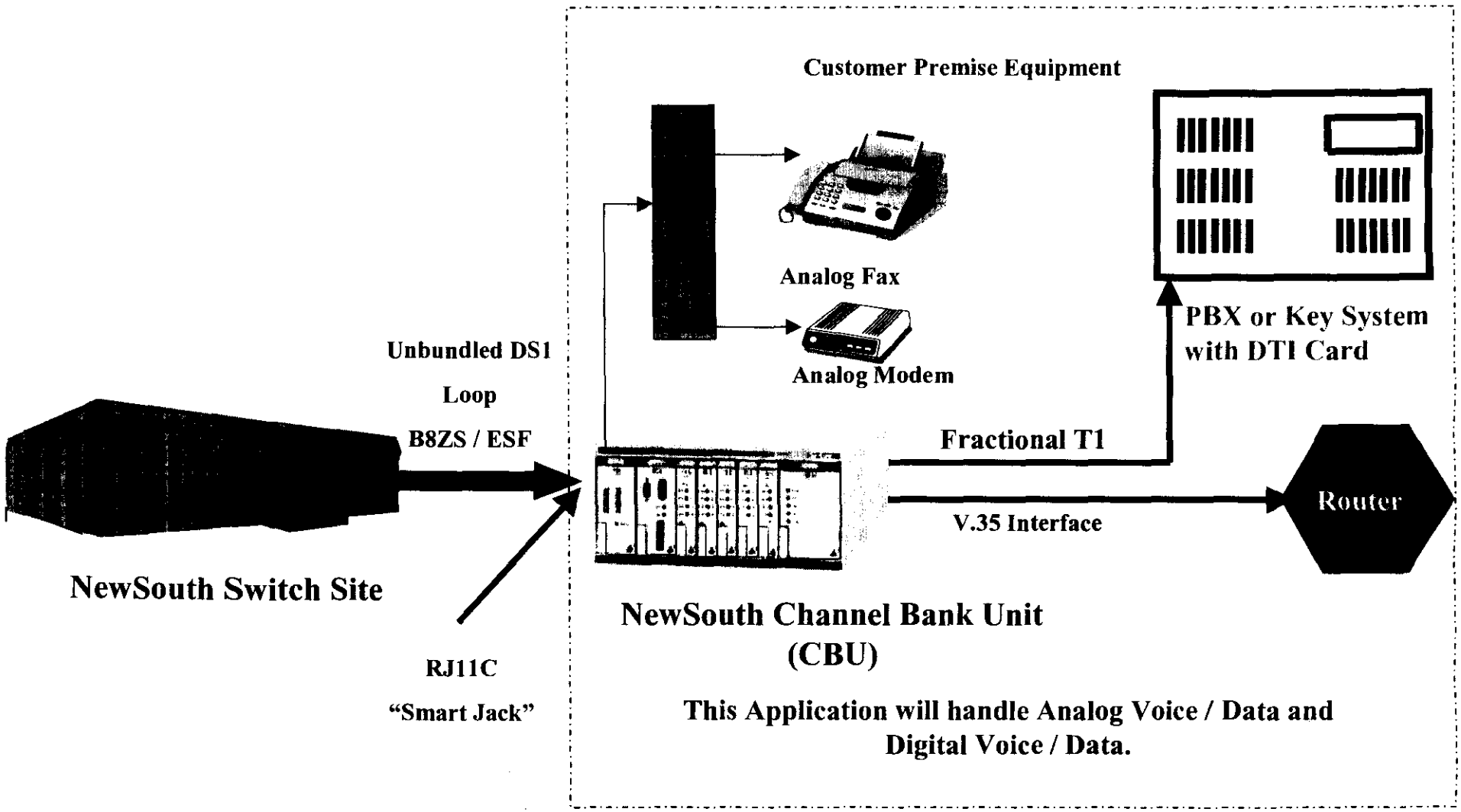

Exhibit 2

NewSouth Collocated Equipment

NewSouth Collocated Equipment

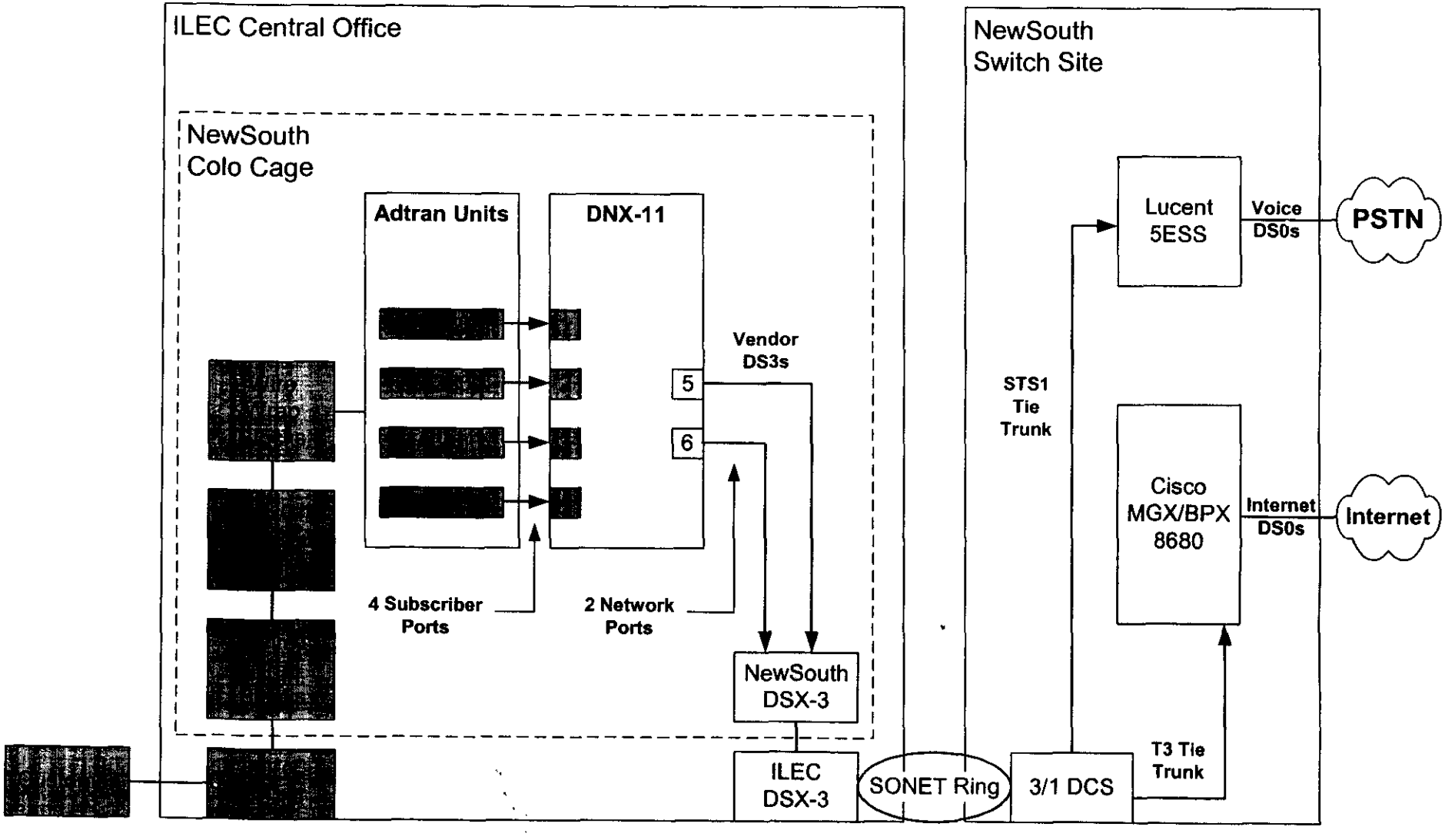

Exhibit 3

Comparison of Local Loops Terminated at a NewSouth Collocation and a NewSouth Point of Presence

NewSouth Network Elements & Architecture
(Local Loop to Collocation)

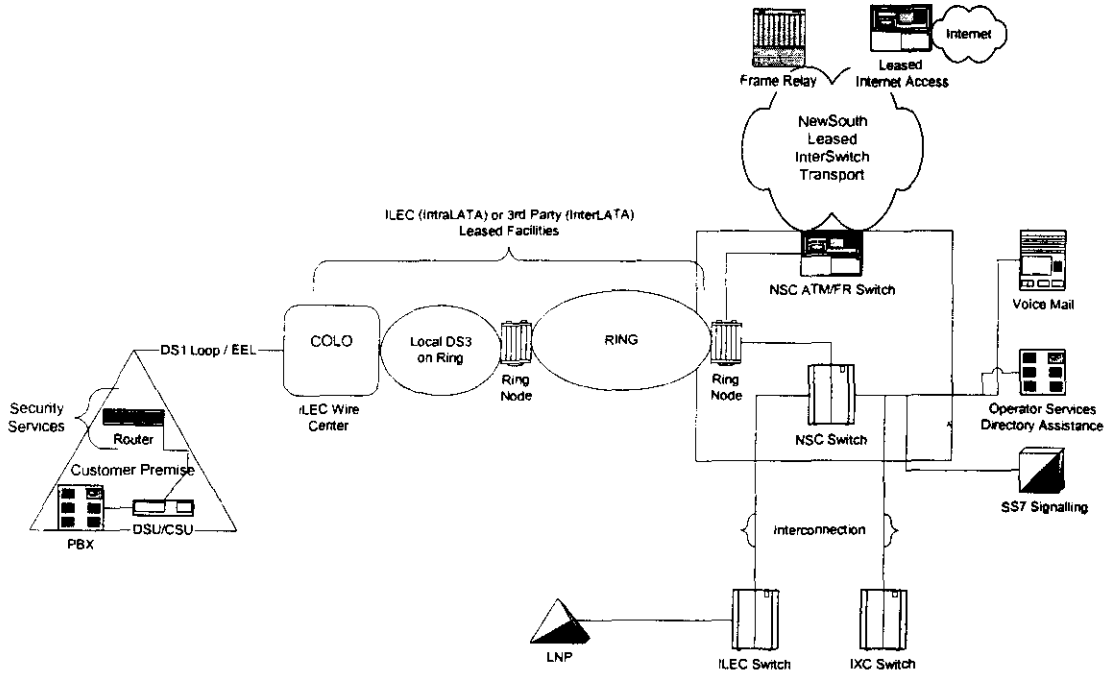

NewSouth Network Elements & Architecture
(Local Loop to POP)

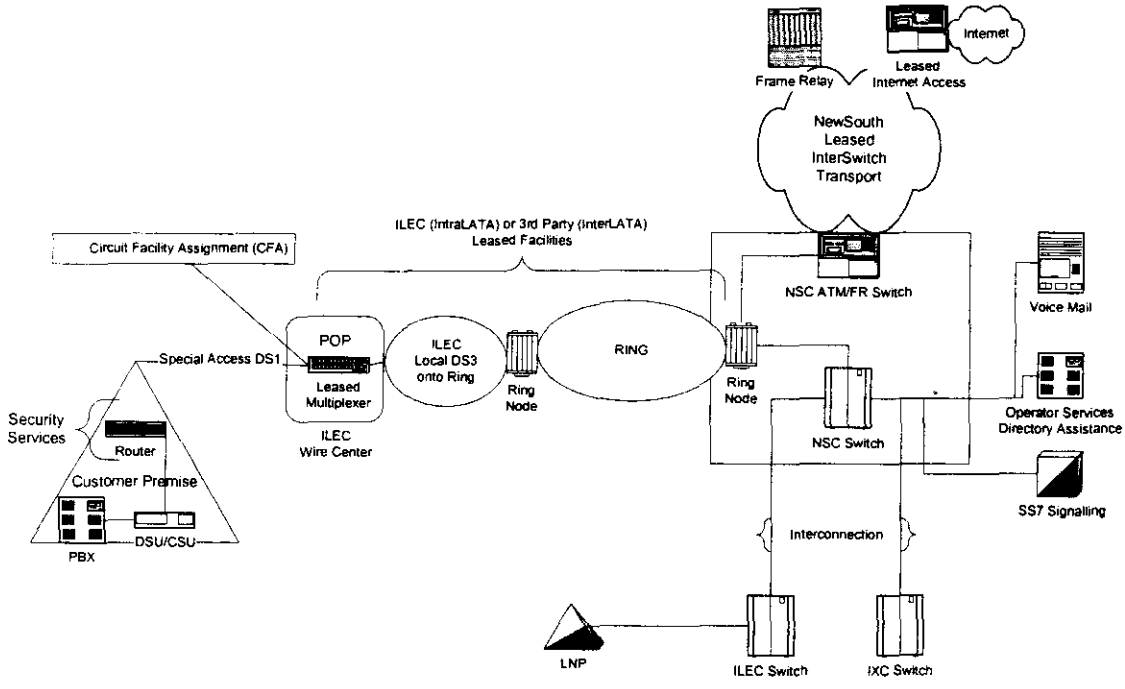

CERTIFICATE OF SERVICE

I, Christopher Bjornson hereby certify that this 5th day of April , 2002, I have caused a true and correct copy of the Comments of NewSouth Communications to be served via first-class mail:

William Caton
Acting Secretary
Federal Communications Commission
445 12th Street, S.W.
Washington, D.C. 20554

Ms. Janice Myles
Wireless Competition Bureau
Federal Communications Commission
455 12th Street, S.W.
Washington, D.C. 20554

Qualex International
Portals II
445 12th Street, SW
Washington, D.C. 20554

Christopher Bjornson

WDC 312237v1