Digital Audio Broadcasting

IBOC Laboratory Test Procedures – AM Band Stereo Separation

Document No. 01-32

December 2001

Revision 1.0

Advanced Television Technology Center
1330 Braddock, Suite 200
Alexandria, VA 22314-1650
(703) 739-3850
(703) 739-3230 (Fax)
www.attc.org

© 2001 ATTC, Inc.

Table of Contents

1 INTRODUCTION 1

1.1 BACKGROUND 1
1.2 DOCUMENT SCOPE 1
1.3 RELATED DOCUMENTS 1

2 SIGNAL DESCRIPTIONS 3

2.1 AM BAND SIGNALS 3
2.1.1 DESIRED HYBRID 3
2.1.2 ADDITIVE WHITE GAUSSIAN NOISE 3

3 STANDARD METHODOLOGIES 4

3.1 AM BAND RF MEASUREMENT 4
3.1.1 IBOC HYBRID MODE POWER 4
3.1.2 ADDITIVE WHITE GAUSSIAN NOISE POWER 5
3.1.3 PERCENT MODULATION 7
3.2 BASEBAND AUDIO MEASUREMENT 8
3.2.1 STEREO SEPARATION MEASUREMENT 8

4 AM DIGITAL STEREO PERFORMANCE PROCEDURES 10

4.1 ENHANCED TO CORE MODE TRANSITION REGION IDENTIFICATION 10
4.2 STEREO SEPARATION WITH A TONE 11
4.3 STEREO SEPARATION WITH SUBJECTIVE AUDIO 13

1 Introduction

1.1 General Overview

1.1.1 Background

Over the course of the past four months, ATTC has conducted a series of tests designed to evaluate the performance of the iBiquity Digital AM IBOC DAB system. These tests, and their corresponding methodologies, have largely been based on the specifications and requirements of the NRSC DAB Subcommittee.

Upon the conclusion of these NRSC defined tests, it was felt that additional tests, beyond the scope of the NRSC requirements, may be necessary to fully describe the stereo separation characteristics of the AM IBOC system. In light of this realization, iBiquity and ATTC worked together to design methodologies that would provide some additional data on AM stereo separation performance and characteristics. This document is a result of that effort.

1.1.2 Document Scope

This document contains the necessary methodologies and procedures for testing the stereo separation performance of the IBOC AM Hybrid mode system. These methodologies and procedures may be readily executed in a laboratory environment. The goal of this document is to provide concise explanations of these methodologies and procedures so that the test engineer and any other readers will be able to better understand the implementation and execution of each test.

1.1.3 Related Documents

Readers of this document may be interested in the physical performance and construction of the test platform. Other test methodologies, procedures and results for the AM IBOC system may also be useful. This information can be found in the following ATTC documents:

1. *Test Bed Proof-Of-Performance Plan (ATTC Doc. 01-20)*
2. *Test Bed Proof-Of-Performance Record of Test Results (ATTC Doc. 01-01)*
3. *Test Bed Daily Calibration Plan (ATTC Doc. 01-21)*
4. *Test Bed Periodic Calibration Plan (ATTC Doc. 01-22)*
5. *Test Bed Daily Calibration Record of Test Results (open ATTC document)*
6. *Digital Audio Broadcasting, IBOC Laboratory Test Procedures - AM Band (ATTC Doc. 01-23)*
7. *Digital Audio Broadcasting, Digital Performance of the iBiquity IBOC System in the AM Band, Summary of Results(ATTC Doc. 01-25)*

1.2 Methodology Overview

1.2.1 Objectives

The test procedures in this document have one primary objective, which may be summarized as:

1. Quantify the stereo separation behavior of the AM IBOC system near the enhanced-core transition region of IBOC operation.

1.2.2 Channel Conditions

The scope of this test effort is limited to AWGN channel conditions. The AWGN condition represents the classic baseline communications channel, and is particularly valuable in facilitating tests that require a high degree of resolution and repeatability.

Since these tests will be focused on IBOC operation near the enhanced-core transition region, the AWGN power within the channel will be set at levels which cause the IBOC system to switch between the enhanced and core modes of operation. The stereo separation performance will then be observed at these various AWGN power levels and switchover points.

1.2.3 Evaluation Methods

Both objective and subjective evaluation methodologies will be used to characterize stereo performance. The objective methodologies will incorporate traditional stereo separation measurements, using standard digital audio instrumentation. The subjective methodologies will incorporate the Expert Observations and Comments (EO&C) of the test engineering staff, based on headphone listening trials and visual observations of an X-Y audio scope.

2 Signal Descriptions

The sections that follow define the signals that are to be used in these tests. Later in this document, if a Desired Hybrid signal with a Moderate Power level is required, the definition of such a signal may be found in this section.

2.1 AM Band Signals

2.1.1 Desired Hybrid

The desired hybrid signal shall contain both analog and digital carriers, as generated by an iBiquity IBOC exciter in AM hybrid mode. The digital portion of the signal will contain both "enhanced" and "core" data streams, utilizing modulation proprietary to iBiquity Digital Corporation. The analog portion of the signal shall have characteristics as follows:

1) Main Carrier: 1080 kHz
2) Power: For these tests a Moderate power level will be used in all cases. A Moderate power level is defined as -70 dBm for the IBOC receiver under test.
3) Pre-emphasis: NRSC-1 standard
4) Bandwidth: 4.5 kHz
5) Positive Peak Modulation: 96%
6) Negative Peak Modulation: 96%
7) Test Dependent Audio Material as follows:
    i) **Stereo Separation with Tones - Digital Signal:** 1 kHz and 4 kHz tones; DAB Processor in Bypass mode
    ii) **Stereo Separation with Tones - Analog Signal:** Twain audio cut; Music Heavy dynamic range processing.
    iii) **Stereo Separation with Subjective Audio:** Messiah audio cut; 2B Classical DAB processing; Fine Arts analog AM processing
    iv) **Stereo Separation with Subjective Audio:** FemaleC10 audio cut; TV 5B News DAB processing; News analog AM processing

The procedures for measuring hybrid mode power and percent modulation may be found in sections 3.1.1 and 3.1.3 respectively.

2.1.2 Additive White Gaussian Noise

Where Additive White Gaussian Noise (AWGN) is required, a broadband noise signal will be added to the spectrum at a specified level. This noise signal will have flat spectral characteristics between 520 and 1710 kHz. Beyond these frequency limits a bandpass filter will attenuate the signal. The peak amplitude excursions of the noise will have a Gaussian distribution.

The procedure for measuring AWGN may be found in section 3.1.2 of this report.

3 Standard Methodologies

The objective of this section is to identify procedures that will be used repeatedly during the execution of these tests. For example, the procedure for measuring a Hybrid mode signal with a Moderate power level (a signal that will be used regularly throughout the testing process) will be defined in this section.

3.1 AM Band RF Measurement

3.1.1 IBOC Hybrid Mode Power

Methodology

This procedure specifies the method that will be used for measuring the power of an IBOC signal in hybrid mode. A hybrid signal is the spectral sum of a traditional analog AM signal and digital carriers. For comparison purposes, we would like to be able to say that a –30dBm hybrid signal has the same amount of *analog* energy as a traditional –30dBm AM signal.

For this reason, all references to the power of a hybrid signal will actually be specifying power in the signal which results from the traditional analog AM carrier (no modulation). In other words, *a –30dBm hybrid signal will actually have –30dBm of power in the analog AM carrier (no modulation) plus the energy resulting from the digital carriers.*

It is not possible to directly measure analog power when the digital carriers are present using a traditional average power meter (at least not without an impracticably steep bandpass filter). Therefore, there are two practical measurement methods that can be employed:

1) Remove digital sidebands and measure remaining analog power with a traditional average power meter or Vector Signal Analyzer
2) Use a spectrum analyzer to measure power of the *unmodulated* analog carrier.

For our purposes, we will utilize the first method in conjunction with an HP437B average power meter. This is facilitated by the fact that the IBOC exciters can readily switch the digital carriers in and out of the spectrum. Since the ratio of analog carrier energy to digital signal energy is a fixed IBOC system parameter, the digital signal power may be unambiguously derived from the analog carrier power at any time.

Setup

The measuring instrument shall be an HP437B average power meter with an HP8482A sensor, and will be configured as shown in Table 3-1.

Table 3-1 HP437B Setup - Hybrid Mode Power

Parameter	Description
Sensor Type	HP 8482A
Limit Checking	On
Low Limit	-30dBm

Parameter	Description
High Limit	+20dBm
Cal. Factor	99.5% (determined for the 8482A)
Note: "Preset" first, and then set above parameters	

Usage of the HP437B must take into consideration the dynamic range of the sensor. Under no circumstances shall a measurement be taken outside the sensor's measurement range. In addition, note that measurements must be made under conditions with no interferers present since any out of band signal will artificially increase readings on the power meter.

Procedure

1) Configure the instrument according to the tables found in the "Setup" section above.
2) The analog carrier must be unmodulated.
3) The digital carriers shall be removed by using the DAB ON/OFF function of the exciter. The remaining energy will be purely analog AM.
4) The power level shall be observed and the instantaneous reading recorded.

Presentation of Data

The resulting measurement shall be expressed to the nearest 0.01 dBm. It should be made clear that this power refers to the analog carrier energy and does not represent the average power level of the entire hybrid signal (as discussed above).

3.1.2 Additive White Gaussian Noise Power

Methodology

This subsection describes the methods which shall be used to measure the average power of an Additive White Gaussian Noise (AWGN) signal.

There are several ways to express the power level of a noise signal such as Additive White Gaussian Noise (AWGN). The first method is bandwidth *independent*, and has units equal to degrees Kelvin. If an AWGN signal has a power that is said to be 30,000 K, then it has the same amount of noise power as a theoretical resistor would at a physical temperature of 30,000 Kelvin. The second method is bandwidth *dependent*, and has units equal to Power per Unit Bandwidth. For our purposes, we need to measure noise power in a given bandwidth. Therefore, we shall use the latter method and express our results in dBm/Hz.

Unfortunately, the measurement of noise power in dBm/Hz units requires some rather specialized procedures and/or equipment. There are two well-known methods used to *measure* the power level of AWGN in bandwidth dependent units.

The first method is informally referred to as the "ENB Method". ENB is an abbreviation for *Equivalent Noise Bandwidth*. In reality, ENB is a property of a bandpass filter. Any bandpass filter has a passband with a finite bandwidth, which may be measured and characterized using a network analyzer or similar instrumentation. This characterization may also involve the calculation of an ENB value for the filter (The details of the ENB calculation are beyond the scope of this test procedure). This ENB calculation may then be used as a conversion factor to convert absolute power units (dBm) into power per unit bandwidth units (dBm/Hz). Using this methodology, one can band-limit AWGN noise using

an ENB calibrated filter, and measure the resultant power in absolute units (using standard instrumentation such as an average power meter). These dBm units may then be converted to dBm/Hz units using the ENB conversion factor as follows:

$$\text{dBm/Hz} = \text{dBm} - 10\log(\text{ENB})$$

where ENB is the bandpass filter's Equivalent Noise Bandwidth, given in Hz units

The setup and procedures for performing a measurement using the ENB method are given in the sections below.

The second method of measuring noise power in dBm/Hz units employs an HP Vector Signal Analyzer (VSA). The VSA is a very sophisticated and rather unique device, because it is fundamentally a time domain device that performs rapid FFT's for spectrum analysis. This architecture allows one to easily measure Power Spectral Density (PSD) without the normal spectrum analyzer concerns of calibrated resolution bandwidth filters. Since the PSD measurement provides results in dBm/Hz units, noise power density can also be directly measured in dBm/Hz units. The setup and procedures for this measurement methodology are also given below.

Unfortunately, both of these measurement methodologies (ENB and VSA) are fundamentally limited by the low level sensitivity of the instrumentation (either the power meter or the VSA). For example, a 30,000 K noise signal has a power level which is rapidly approaching the inherent noise floor of the VSA, and is also significantly below the limits of any standard power sensor. In order to overcome this limitation, noise power is measured at a much higher power level. Then, in order to achieve lower noise power levels, a known/calibrated attenuator is inserted in-line with the high level noise source. (Insertion of this inline attenuation is facilitated by our noise generation instrument, which contains precision attenuators installed internally).

Setup (ENB Method)

The power measuring instrument shall be an HP437B average power in conjunction with a power sensor, and will be configured as shown in Table 3-2.

Table 3-2 HP 437B Setup – Analog FM Power

Parameter	Description
Sensor Type	8482A
Limit Checking	On
Low Limit	-30dBm
Filter/Averaging	Auto
Note: "Preset" first, and then set above parameters	

Because the AWGN noise will have a relatively high peak-to-average ratio, the power sensor must operate with some "headroom".

Procedure (ENB Method)

1) Set the noise generator's output attenuator to 0.0dB, and enable the calibrated internal AM Bandpass Filter (AM BPF).

2) Measure the absolute power of the noise, using the instrumentation described above, and observing the appropriate power limits.
3) Convert the result of Step 2 from dBm to dBm/Hz units using the equation described in the methodology section. Note that the ENB of the noise generator's filter is available on the unit's calibration certificates.

Presentation of Data (ENB Method)

The result of Step 5, above, shall be given in dBm/Hz units and expressed with a precision of 0.01dB.

Setup (VSA Method)

The power measuring instrument shall be an HP89441A Vector Signal Analyzer (VSA), and will be configured as shown in Table 3-3.

Table 3-3 HP Vector Signal Analyzer Setup – Noise Measurements

Parameter	Setting
Note: "Preset" first, and then set parameters below	
Center Frequency	1080 KHz
Span	200 KHz
Range (sensitivity)	Highest sensitivity before "over" LED
Resolution Bandwidth	3kHz (auto-coupled)
Measurement Data	PSD (Power Spectral Density)
Averages	250
Marker Frequency	1080 KHz

Procedure (VSA Method)

1) Setup the HP 89441 VSA according to Table 3-3.
2) Note that the marker must be positioned to take measurements at 1080 KHz
3) Set the noise generator output attenuator to 0.0dB, and the AM bandpass filter inline/enabled.
4) Observe the power spectral density (PSD) marker reading on the VSA, ensuring that the running average has reached at least 250.

Presentation of Data (VSA Method)

The resulting measurement will be given in dBm/Hz units, and expressed with a precision of 0.1dB.

3.1.3 Percent Modulation

Methodology

In order to operate an AM analog signal with maximum SNR and minimum distortion, the modulation percentage of the AM signal needs to be continuously monitored. This continuous monitoring will be accomplished through a broadcast grade, DSP based modulation monitor.

The performance of the modulation monitor shall be verified during the proof-of-performance calibration, using the trapezoid and spectrum analyzer methods. For details

on this verification methodology, please refer to the proof-of-performance plan, as referenced in section 1.1.3.

Setup

The AM channel characteristics shall be measured using the instrumentation and setup shown in Figure 3-1. A complete listing of the setup of these devices may be found in the test bed proof-of-performance record of test results, as referenced above in section 1.1.3.

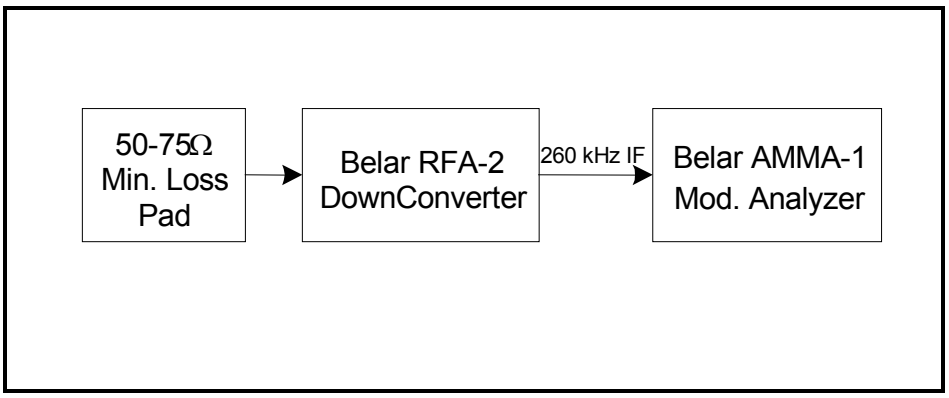

Figure 3-1 Setup for Modulation Readings

Procedure

The equipment shown in Figure 3-1 shall be used to make measurements of the positive and negative percent modulation.

It is important to note that these measurements may only be performed on analog signals. In other words, all measurements must be made with the *IBOC sidebands removed*. These instruments are not designed to provide accurate readings in the presence of IBOC sidebands, and erroneous readings will result if such a measurement is attempted.

Presentation of Data

The resulting data shall be expressed as a percentage (%) with a precision of 1.0%.

3.2 Baseband Audio Measurement

This subsection describes the methods to be used to measure the characteristics of baseband audio signals.

3.2.1 Stereo Separation

Methodology

This section describes the method for measuring the stereo separation of an audio signal at the output of an IBOC receiver. Stereo separation may be measured as either Left-to-Right separation or Right-to-Left separation.

The Left-to-Right stereo separation shall be measured when there is an audio signal present on only the left channel of the desired digital signal. Left-to-Right stereo

separation is defined as the ratio of the signal present at the left channel to the signal present at the right channel of the IBOC receiver output.

The Right-to-Left stereo separation shall be measured when there is an audio signal present on only the right channel of the desired digital signal. The Right-to-Left stereo separation is defined as the ratio of the signal present at the right channel to the signal present at the left channel of the IBOC receiver output.

To perform these measurements, a –20dBFS tone will be applied to one channel of the desired digital signal. Then the left and right digital audio outputs of the IBOC receiver will be measured in dBFS units, using standard digital audio instrumentation. The difference (in dB) between the left and right signals is then calculated, and recorded as the IBOC system's stereo separation.

Setup

The measuring instrument will be the Audio Precision System One with the digital input/output and the digital analyzer settings as shown in Table 3-4 and Table 3-5, respectively.

Table 3-4 Digital I/O Settings for the Audio Precision System One

Parameter	Setting
Input	Serial
Output	Serial
Serial Type	AES/EBU SPDIF
Rate	44.1 kHz
Dither	None
Resolution	16 bits

Table 3-5 Digital Analyzer Settings for the Audio Precision System One

Parameter	Setting
Analyzer	Digital Domain Audio Tester(genanlr)
BP/BR Filter	*NA
HP Filter Freq	22 Hz
Reading Rate	Auto RMS
DGen Freq	1 kHz or 4 kHz
DGen Ampl	-20 dBFS

Procedure

1) Setup the AP System One Digital I/O and Digital Analyzer as shown in Table 3-4 and Table 3-5 respectively.
2) Use the digital generator to apply the desired signal to the appropriate channel.
3) Use the digital analyzer to measure the left and right audio channels in dBFS units.
4) Find the difference between the left and right channel readings of step 3. Record this difference as the stereo separation test result.

Presentation of Data

The stereo separation shall be expressed as a ratio with units of dB and a precision of 1 dB.

4 AM Digital Stereo Performance Procedures

The sections that follow define the procedures and methodologies for testing stereo performance of the IBOC system in the AM band.

4.1 Enhanced to Core Mode Transition Region Identification

Objective

1. Determine the carrier power to AWGN density ratio (C/No) that will cause enhanced to core mode transition in the case of a desired hybrid signal with a moderate power level.

Methodology

The purpose of this test is to determine the C/No where the transition between enhanced mode and core mode operation of the system will occur. In this test plan, the C/No point where enhanced to core transition occurs will be referred to as Te-c.

The test platform will be used to generate AWGN channel conditions. To locate Te-c, an IBOC BLER & "Mode" vs. C/No in AWGN Channel Conditions[1] curve will be generated. To do this, the BLER and mode of the output of the IBOC receiver will be recorded under different AWGN conditions, and a plot will be made.

Once the IBOC BLER vs. C/No in AWGN Channel Conditions curve has been generated, this data can be used to roughly determine Te-c. Using the rough estimate obtained from the curve, the test engineer will listen to, and view on an X-Y scope, various audio cuts to accurately determine Te-c. The test engineer will also record Expert Observations and Comments (EO&C).

Test Conditions

Table 4-1 lists the channel conditions included in this test. Since this test was previously performed, the test engineer will run a short version of the test and compare the results with those previously obtained. Note that the primary test variable is indicated by the entry 'Variable'.

Table 4-2 indicates that EO&C will be recorded for a minimum of three points "near" the selected enhanced-core transition point.

[1] A version of this test was previously performed and documented. For more information on that test procedure and results refer to Digital Audio Broadcasting, IBOC Laboratory Test Procedures - AM Band (ATTC Doc. 01-23), Digital Audio Broadcasting, Record of Test Results, Digital Performance of the iBiquity IBOC System in the AM Band (ATTC Doc. 01-24), and/or Digital Audio Broadcasting, Digital Performance of the iBiquity IBOC System in the AM Band, Summary of Results(ATTC Doc. 01-25).

Table 4-1 Objective Performance in AWGN Conditions

#	Desired	AWGN Level
7101	Hybrid: Moderate	Variable

Table 4-2 EO&C Near the Enhanced to Core Mode Transition

#	Desired	AWGN Level	Receiver	Audio Cut
7801	Hybrid: Moderate	~Te-c	IBOC	Messiah
7802	Hybrid: Moderate	~Te-c	IBOC	Messiah
7803	Hybrid: Moderate	~Te-c	IBOC	Messiah

Procedure

1) Table 4-1 will be use as a guide for this test.
2) Establish the mode and signal strength of the desired signal. For a definition of a desired hybrid signal refer to section 2.1.1 of this report. The procedure for measuring the power level of a Hybrid mode signal can be found in section 3.1.1 of this report.
3) Modulate the Analog and Digital portions of the signal with the appropriate audio cut.
4) Apply AWGN at a low power level. Refer to section 2.1.2 for a definition of AWGN noise, and 3.1.2 for the procedures of AWGN noise power measurement.
5) Increase the AWGN power level in coarse increments until a non-zero BLER is observed in the enhanced data stream.
6) Compare the BLER obtained with that of previous test.
7) If the new data matches the old data, use this curve to roughly estimate Te-c.
8) By listening to and observing the audio output of the IBOC receiver on an X-Y scope at C/No levels near this rough estimate, determine the AWGN level at which the transition from enhanced mode to core mode actually occurs and record this level. Record EO&C at least three levels near the selected transition point.

Presentation of Data

The final Te-c will be given as a C/No ratio in dB units with a precision of 0.1 dB.

4.2 Stereo Separation with a Tone

Objectives

1. Measure the Left-to-Right stereo separation in the presence of AWGN, where the carrier power to AWGN density ratio (C/No) is near the enhanced-core transition point (Te-c).
2. Measure the Right-to-Left stereo separation in the presence of AWGN, where the carrier power to AWGN density ratio (C/No) is near the enhanced-core transition point (Te-c).

Methodology

In this test series, the Left-to-Right (L-R) and Right-to-Left (R-L) stereo separation of AM IBOC will be measured in various channel conditions around the enhanced-core transition region (Te-c). These measurements will be taken at Te-c - 2 dB, Te-c - 4 dB, and Te-c - 6 dB. When these measurements are taken, the analog portion of the signal will be modulated with a typical AM signal in order to emulated real world conditions.

A 1 kHz tone will be applied to the left channel of the desired digital signal (silence will be applied to the right channel) and the Left-to-Right stereo separation will be determined. This process will be repeated for a 4 kHz tone. The tones will then be applied to the right channel of the desired digital signal (with silence to the left channel), then the IBOC receiver output will be measured so that the Right-to-Left stereo separation of the system can be determined.

Test Conditions

Table 4-3 lists the channel conditions included in this series of tests. The following information may be helpful in understanding the construction of this table.

1. Each row of the table indicates one test and each test is assigned a unique identification number in the # column.
2. The *Desired* column indicates the mode and power level of the desired signal. The mode is Hybrid and the power level is Moderate for all of these tests.
3. The *AWGN Level* column indicates the AWGN power level in indirect units, where Te-c is the level at which the transition from enhanced mode to core mode occurs (as determined in section 4.1).
4. The *Receiver* column indicates the receiver under test.
5. The *Audio* column indicates the audio signal that will be used for each test.
6. The *Measurement* column indicates the stereo separation to be measured, either Left-to-Right (L-R) or Right-to-Left (R-L).

Table 4-3 Stereo separation in AWGN Conditions

#	Desired	AWGN Level	Receiver	Audio	Measurement
7804	Hybrid: Moderate	Te-c - 2 dB	IBOC	1 kHz	L-R Separation
7805	Hybrid: Moderate	Te-c - 2 dB	IBOC	4 kHz	L-R Separation
7806	Hybrid: Moderate	Te-c - 2 dB	IBOC	1 kHz	R-L Separation
7807	Hybrid: Moderate	Te-c - 2 dB	IBOC	4 kHz	R-L Separation
7808	Hybrid: Moderate	Te-c - 4 dB	IBOC	1 kHz	L-R Separation
7809	Hybrid: Moderate	Te-c - 4 dB	IBOC	4 kHz	L-R Separation
7810	Hybrid: Moderate	Te-c - 4 dB	IBOC	1 kHz	R-L Separation
7811	Hybrid: Moderate	Te-c - 4 dB	IBOC	4 kHz	R-L Separation
7812	Hybrid: Moderate	Te-c - 6 dB	IBOC	1 kHz	L-R Separation
7813	Hybrid: Moderate	Te-c - 6 dB	IBOC	4 kHz	L-R Separation
7814	Hybrid: Moderate	Te-c - 6 dB	IBOC	1 kHz	R-L Separation
7815	Hybrid: Moderate	Te-c - 6 dB	IBOC	4 kHz	R-L Separation

Procedure

1) The IBOC receiver will be used for this test series.
2) Table 4-3 shall be used as a guide for setting up the channel conditions. Each row of the table shall be executed individually.
3) Establish the mode and signal strength of the desired signal. For a definition of a desired hybrid signal refer to section 2.1.1 of this report. The procedure for measuring the power level of a Hybrid mode signal can be found in section 3.1.1 of this report.
4) Apply the AWGN power level indicated by the test table. For a definition of AWGN refer to section 2.1.2 of this report. The method of determining the AWGN power can be found in section 3.1.2 of this report.
5) Modulate the Analog portion of the signal with the Twain loop with Music Heavy dynamic range processing.

6) Measure Left-to-Right or Right-to-Left stereo separation according to the procedure defined in section 3.2.1.

Presentation of Data

The values measured at the left and right channels will be used to determine the stereo separation for each test. This data will be presented in table form with a precision of 1.0 dB.

4.3 Stereo Separation with Subjective Audio

Objectives

1) Observe the stereo separation of the audio output of the IBOC receiver in the presence of AWGN using an X-Y Scope.
2) Apply subjective audio to the left channel of the desired digital signal and observe the stereo separation of the output of the IBOC receiver on the X-Y Scope.
3) Apply subjective audio to the right channel of the desired digital signal and observe the stereo separation of the output of the IBOC receiver on the X-Y Scope.

Methodology

For this test group the stereo separation of the output of the IBOC receiver will be examined with an X-Y Scope.

To accomplish this, the analog and digital portions of the signal will be modulated with a subjective audio cut and the appropriate dynamic range processing. Next, the appropriate AWGN power level will be added to the spectrum and the audio output of the IBOC receiver will be connected to an X-Y Scope.

Expert Observations and Comments are to be made at a carrier to AWGN density level (C/No), which is near the enhanced-core transition point (Te-c). Specifically, at Te-c - 2 dB, Te-c - 4 dB, and Te-c - 6 dB.

Test Conditions

Table 4-4 shows the channel conditions that are to be included in this set of tests. The following information may be helpful in understanding the construction of this table.

1) Each row represents an individual test and each test is assigned a unique number in the # column.
2) The *Desired* column indicates the mode and power level of the desired signal.
3) The *AWGN Level* column indicates the AWGN power level in indirect units, where Te-c is the level at which the transition from enhanced mode to core mode occurs (as determined in section 4.1).
4) The *Receiver* column indicates the receiver under test for each test.
5) The *Audio* column refers to the subjective audio cut to be played.

Table 4-4 Stereo Separation with Subjective Audio in AWGN Conditions

#	Desired	AWGN Level	Receiver	Audio
7816	Hybrid: Moderate	Te-c - 2 dB	IBOC	Messiah
7817	Hybrid: Moderate	Te-c - 4 dB	IBOC	Messiah

#	Desired	AWGN Level	Receiver	Audio
7818	Hybrid: Moderate	Te-c - 6 dB	IBOC	Messiah
7819	Hybrid: Moderate	Te-c - 2 dB	IBOC	FemaleC10 on Left Only
7820	Hybrid: Moderate	Te-c - 4 dB	IBOC	FemaleC10 on Left Only
7821	Hybrid: Moderate	Te-c - 6 dB	IBOC	FemaleC10 on Left Only
7822	Hybrid: Moderate	Te-c - 2 dB	IBOC	FemaleC10 on Right Only
7823	Hybrid: Moderate	Te-c - 4 dB	IBOC	FemaleC10 on Right Only
7824	Hybrid: Moderate	Te-c - 6 dB	IBOC	FemaleC10 on Right Only

Procedure

1) Table 4-4 shall be used as a guide for setting up the channel conditions for these tests. Each row of the test table should be executed individually.
2) Establish the power level and mode of the desired channel as indicated in the test table. For the definition of a desired Hybrid signal and the method for measuring Hybrid mode power refer to sections 2.1.1 and 3.1.1 respectively.
3) Add the AWGN power level, as indicated by the test table, to the spectrum. For a definition of AWGN and the method for measuring AWGN power refer to sections 2.1.2 and 3.1.2 respectively.
4) Modulate the analog and digital parts of the signal with the audio cut indicated by the test table, with the appropriate processing. The processing used can be found in section 2.1.1.
5) Observe the audio output of the IBOC receiver on an X-Y Scope.

Presentation of Data

Expert Observations of the IBOC receiver audio output will be made and recorded.