- Use of WFA
- Pull and analyze the order (FMAC)
- Trip time to non-staffed CO : R
- Install plug-in equipment on high speed SONET Mux (Cost recovered elsewhere)
- Install plug-in equipment on DCS (Cost recovered elsewhere)
- OSS (OPS/INE) CPU electronic cross-connect/mapping time for 1 DCS and 1 SONET ADM/LTE.
- Perform remote B3ZS test
- Retrieve and analyze PM data (NMA) test (BER, ES, etc) for 100% of the time
- Perform Intrusive test as required : R
- Continuity verification cross-office test done via COMPL/CTAG response included in 2 second (4 second total for DCS and SONET ADM/LTE) acknowledgment response
- Close the order (FMAC)

Fallout:
It is assumed that fallout of the order will occur 2%of the time to the CPC Center because it is a DS3 designed service. The activities include the following:

- Pull and analyze the order
- Clear the jeopardy

Other EDSX/DCS Assumptions for DS1 and DS3 Transport:
According to Bellcore SR-TSV-002275, BOC Notes on the LEC Network, Issue 2 (April 1994), Section 9.2.2.2, pages 9-7 and 9-8[48]: "EDSXs are software controlled alternatives to the manual DSX. . . DCSs are software -controlled devices considered to be intelligent network elements because they can provide the following features:

- Remote Provisioning and rearrangement of the digital interconnections;
- Continuous service monitoring;
- Automatic equipment and facilities protection (self-healing capabilities); and
- Remote test access."

Example: In the case of a DS1 terminating on a DCS or EDSX, no physical DSX or crossconnect is required. At the time of construction (EF&I) the DCS or EDSX should be cabled via CFA directly to the CLEC collocation space or SONET ADM. Done this way, the CFA is effectively accomplished at the time the infrastructure is built. Once the infrastructure is in place, the cross connect takes place electronically in a mater of 2 seconds[49] in a mechanized flow-through manner via upstream OSS systems. Again, all new connects, disconnects, and rearrangements can then be accomplished in a flow-through manner from Operations Support Systems over a standard TL1/X.25 interface within 2 seconds (See Bellcore Technical Reference GR-199-CORE).

[48] Bellcore SR-TSV-002275, BOC Notes on the LEC Network, Issue 2 (April 1994), Section 9.2.2.2, pages 9-7 and 9-8.

[49] Reference Bellcore GR-199-CORE

Element Type 23: DS3 Interoffice Transport – (Disconnect)

Definition: DS3 is a 44.736Mb/s digital transmission medium which has the virtual capacity of 28 DS1's or 672 DS0 voice or data circuits.

Objective: Disconnect a DS3 Interoffice Transport service for a CLEC customer.

Environment: DS3 Interoffice Transport (see Model Description for install DS3 description)

Key Drivers of Cost:
Variable Input
- Labor Rate
- Variable Overhead
- Fallout
- CO Staffed Ratio
- Average Trip Time
- Number of Work Activities per Trip

Work Value Input
- Manual Work Step Times

High Level Process Overview:

Transmission Type: Analog__ Digital x.
Unbundled Loop: Yes__ No __.
Examples of service used on this element type:
DS3 between an ILEC and a CLEC

Time Estimates: Activity times are based on estimates provided by a panel of Subject Matter Experts.

Sample Output: See Attachment B

Detailed Work Activities: See Attachment C

Detailed Work Activity Descriptions:

Technical Description:
The following assumptions were made for DS3 Transport:
- This non-recurring cost was developed to provide the new entrant the ability to install, disconnect, and purchase the capacity for DS3 Transport. The assumptions include that all DS1, DS3 Connecting Facility Assignment (CFA) terminations (also known as Expanded Interconnection Channel Terminations (CFA)) are less than 655 and 450 feet, respectively. There are no ORBs, M1/3 Mux, DSXs; cross connects, adjunct test equipment, and adjunct performance monitoring units since they are inherent in DCS/EDSX.
- The study assumes that the SONET rings are in place (see DS1 transport for SONET diagram).
- For placement of the Plug-in or channel-unit the costs are recovered under recurring charges. Also included in this task is the technician placing his/her wrist strap on to guard against any ESD problems.
- Technology assumes SONET and depending on speed, UPSR and BLSR self-healing rings.
- The DCS technology assumption includes 3/3 DCS/EDSX and/or 3/1 DCS dropping from SONET ring. SONET Plug-in equipment assumes that the DS3 or STS-1 are virtual.
- Crossconnects are electronic via upstream, remote OSS systems.
- Rationale: The assumption of a DS3 terminating on a DCS is that no DSX or associated manual cross connect is required because the DCS - if installed properly - should be cabled or hardwired to

the office repeater bay ("ORB")[50] or Fiber Multiplexer (SONET Mux) without a DSX. All new-connects, disconnects, edits, and rearrangements (rolls) are transaction based and flow through automatically via upstream OSS over a standard TL1/X.25 interface in approximately 2.0 seconds (see Bellcore GR-199-CORE. Section 2, Pg. 2-5).[51]

- Using the most forward-looking technology such as EDSX/DCS, there would be no need to run manual DS3 cross-connects to the DSX every time a customer changed providers since the software based/stored program control technology would allow for flow-through provisioning and maintenance from upstream operations support systems ("OSS") right down to the network elements in a matter of seconds with little or no human intervention required.
  The study also assumes that the performance monitoring for Error Seconds (ES), Bit Error Rate (BER), Cyclical Redundancy Check (CRC), Unavailable Seconds (UAS), Severely Error Seconds (SES), and Automatic Protection Counts (APC) have been set (per Bellcore GR-253-CORE, a module of the TSGR)[52].
  It is further assumed that DS3 was virtual over SONET Ring. It also assumed that cross connects are performed electronically, in a flow-through manner via upstream OSS systems.
  This cross connect will take 50 ms. CPU time with an acknowledgment response within 2 seconds. (see Bellcore GR-199-CORE. Section 2, Pg. 2-5).[53]
- This non-recurring charge was developed to provide the new entrant the ability to install and purchase the capacity for DS3 Transport (see figure below).

Disconnect:

- Flow-through assumed on disconnect from TIRKS to NSDB, and NSDB to OPS/INE.
- OSS (OPS/INE) CPU electronic disconnect of cross-connect time for 1 DCS and 2 SONET ADM/LTE (cost recovered elsewhere)
- Verification of disconnects via COMPL/CTAG autonomous messages from DCS and SONET ADM to OSS.

Fallout:

It is assumed that fallout of the order will occur 2% of the time to the CPC Center because it is a DS1 designed service. The activities include the following:

- Pull and analyze the order
- Clear the jeopardy

Other EDSX/DCS Assumptions for DS1 and DS3 Transport:

According to Bellcore SR-TSV-002275, BOC Notes on the LEC Network, Issue 2 (April 1994), Section 9.2.2.2, pages 9-7 and 9-8[54]: "EDSXs are software controlled alternatives to the manual DSX. . . DCSs

---

50 ORBs are required when LBO exceed the pulse template for DS1 (655') or DS3 (450').

51 Bellcore OTGR, FR-439, (TR-TSY-000199/GR-199-CORE; TL1 Specifications on Memory Administration).

52 Bellcore GR-253-CORE; SONET Requirements and Objectives (a module of the TSGR).

53 Bellcore OTGR, FR-439, (TR-TSY-000199/GR-199-CORE; TL1 Specifications on Memory Administration).

are software -controlled devices considered to be intelligent network elements because they can provide the following features:

- Remote Provisioning and rearrangement of the digital interconnections;
- Continuous service monitoring;
- Automatic equipment and facilities protection (self-healing capabilities); and
- Remote test access."

Example

In the case of a DS3 terminating on a DCS or EDSX, no physical DSX or crossconnect is required. At the time of construction (EF&I) the DCS or EDSX should be cabled via CFA directly to the CLEC collocation space or SONET ADM. Done this way, the CFA is effectively accomplished at the time the infrastructure is built. Once the infrastructure is in place, the cross connect takes place electronically in a mater of 2 seconds[55] in a mechanized flow-through manner via upstream OSS systems. Again, all new connects, disconnects, and rearrangements can then be accomplished in a flow-through manner from Operations Support Systems over a standard TL1/X.25 interface within 2 seconds (See Bellcore Technical Reference GR-199-CORE).

[54] Bellcore SR-TSV-002275, BOC Notes on the LEC Network, Issue 2 (April 1994), Section 9.2.2.2, pages 9-7 and 9-8.

[55] Reference Bellcore GR-199-CORE

Element Type 24: 2 Wire Loop, Different (Foreign) Central Office – (Migration)

Definition: A 2 Wire designed point-to-point designed circuit that is similar in design to a 2-wire FX circuit in that it is multiplexed up to a DS1 Transport on AD4 (Z office) and DCS (A office), and transported to another office where the CLEC physically collocates.

Objective: Migrate a 2 Wire Local Loop service for a CLEC customer in a different Central Office.

Environment: Migration UNE-Loop (see Model description for UNE-Loop description)

Key Drivers of Cost:
Variable Input
- Labor Rate
- Variable Overhead
- Fallout
- CO Staffed Ratio
- Average Trip Time
- Number of Work Activities per Trip

Work Value Input
- Manual Work Step Times

High Level Process Overview:

Transmission Type: Analog x Digital x.
Unbundled Loop: Yes x No __.
Examples of service used on this element type:
POTS, ISDN BRI (Virtual DS0's in a DS1)
FX
1MR, 1MB
1FR, 1MB

Time Estimates: Activity times are based on estimates by a panel of Subject Matter Experts.

Sample Output: See Attachment B

Detailed Work Activities: See Attachment C

Detailed Work Activity Descriptions:

Technical Description:
There may be situations where the CLEC may choose not to collocate in the same wire center serving the end user customer. This circuit, by its nature constitutes a designed circuit. If the 2-wire loop serves the end-user from a different CO or wire center, SMAS test points are modeled with unitized SMAS in the AD4 (ADTS). DS1 Inter Office Facilities (IOF) are used.
In the event that channel banks are a necessity (provided over what is considered DS0 Transport), as is the case of a 2-wire loop (analog or digital) served from a different CO or wire center than the end-user is currently served from (or physical collocation in a different wire center), a forward-looking automated D4 such as an AD4 Automated Digital Terminal System (ADTS[56]) should be assumed in the Z-office or wire center serving the end-user customer. An AD4 is considered a Processor Controlled Network Element (PCNE), supports multi-function channel units, and can be provisioned, monitored, tested, and inventoried from upstream ILEC legacy OSS systems. In this scenario, the SMAS points are assumed to

56 ADTS requirements and objectives can be found in Bellcore's TR-TSY-000174.

be unitized with the associated maintenance-connectors and cabling hardwired into the AD4 seven (7) foot or eleven (actually 11'6") foot bays (see Exhibits below). Conversely, it is also assumed that in the office where the CLEC has decided to collocate (A-office), that the DS1 IOF is terminated on a DCS, and that a DS1 CFA is handed off to the collocated space from the DCS. Consequently, the crossconnect (DS1) in the DCS is assumed to be electronic (CPU time) and flows-through from upstream OSS systems (TIRKS, NSDB, OPS/INE).
As a result of a designed service, the upstream OSS systems (e.g., TIRKS/FEPS) and appropriate work groups (e.g., NTEC,) are also assumed. *Finally, in the above scenario (different CO), the multiplexed (to DS0) DS1 and associated Multiplexer (AD4) is considered to be a DS1/DS0 Transport element.*

Migration:
- Use of WFA
- Pull and analyze the order (NTEC)
- Pull and analyze the order (SSC)
- 4-Work Activities per trip
- Trip time to non-staffed CO
- Travel time within the CO
- Negotiate customer release (CLEC and ILEC)
- Monitor circuit for traffic busy and correct assignment
- Check dial tone and ANI
- Terminate cross-connects on SMAS test points on toll frame
- Terminate cross-connects on LDPF (Cosmic-Type) frame
- Conduct testing - 1000hz (copper only)
- Conduct dial tone and ANI test
- Close the order (NTEC)
- Close the order (SSC)

Fallout:
It is assumed that fallout of the order will occur 2% of the time to the CPC Center because it is a designed service. The activities include the following:
- Pull and analyze the order
- Resolve the fallout

Notes: The IDF/TDF and LDPF (Cosmic-Type) are illustrated as 2 appearances on one frame to identify the cross-connect. If circuit is ISDN/BRI in the above example (different CO), then it is assumed that 3 BRITE Channel Units are installed as opposed to 1 FX Channel Unit installed if it is a POTS voice circuit.

Element Type 25: 2 Wire Loop, Different (Foreign) Central Office – (Install)

Definition: A 2 Wire designed point-to-point designed circuit that is similar in design to a 2-wire FX circuit in that it is multiplexed up to a DS1 Transport on AD4 (Z office) and DCS (A office), and transported to another office where the CLEC physically collocates.

Objective: Install a 2 Wire Local Loop service for a CLEC customer in a different Central Office (CO) or wire center.

Environment: Installation UNE-Loop (see Model description for UNE-Loop description)

Key Drivers of Cost:
Variable Input

- Labor Rate
- Variable Overhead
- Fallout
- Copper Loop Percentage
- Average Trip Time
- Number of Work Activities per Trip
- CO Staffed Ratio

Work Value Input

- Manual Work Step Times

High Level Process Overview:

Transmission Type: Analog x Digital x.
Unbundled Loop: Yes x No __.
Examples of service used on this element type:

Foreign Exchange (FX)
POTS, ISDN/BRI
1MR, 1MB
1FR, 1FB

Time Estimates: Activity times are based on estimates by a panel of Subject Matter Experts.

Sample Output: See Attachment B

Detailed Work Activities: See Attachment C

Detailed Work Activity Descriptions:

Technical Description:
There may be situations where the CLEC may choose not to collocate in the same wire center serving the end user customer. This circuit, by its nature constitutes a designed circuit. If the 2-wire loop serves the end-user from a different CO or wire center, SMAS test points are modeled with unitized SMAS in the AD4 (ADTS). DS1 Inter Office Facilities (IOF) are used.
In the event that channel banks are a necessity (provided over what is considered DS0 Transport), as is the case of a 2-wire loop (analog or digital) served from a different CO or wire center than the end-user is currently served from (or physical collocation in a different wire center), a forward-looking automated D4 such as an AD4 Automated Digital Terminal System (ADTS[57]) should be assumed in the Z-office or wire center serving the end-user customer. An AD4 is considered a Processor Controlled Network Element

57 ADTS requirements and objectives can be found in Bellcore's TR-TSY-000174.

(PCNE), supports multi-function channel units, and can be provisioned, monitored, tested, and inventoried from upstream ILEC legacy OSS systems. In this scenario, the SMAS points are assumed to be unitized with the associated maintenance-connectors and cabling hardwired into the AD4 seven (7) foot or eleven (actually 11'6") foot bays (see Exhibits below). Conversely, it is also assumed that in the office where the CLEC has decided to collocate (A-office), that the DS1 IOF is terminated on a DCS, and that a DS1 CFA is handed off to the collocated space from the DCS. Consequently, the crossconnect (DS1) in the DCS is assumed to be electronic (CPU time) and flows-through from upstream OSS systems (TIRKS, NSDB, OPS/INE).
As a result of a designed service, the upstream OSS systems (e.g., TIRKS/FEPS) and appropriate work groups (e.g., NTEC) are also assumed. *Finally, in the above scenario (different CO), the multiplexed (to DS0) DS1 and associated Multiplexer (AD4) is considered to be a DS1/DS0 Transport element.*

Installation:
- Use of WFA
- 4-Work Activities per trip
- Pull and analyze the order (NTEC)
- Pull and analyze the order (SSC)
- Trip time to non-staffed CO
- Travel time within the CO
- Terminate wire wrap cross-connects to AD4 ADTS Channel Bank/unitized SMAS
- Terminate cross-connects on LDPF (Cosmic-Type) frame
- Conduct testing - 1000hz
- Conduct continuity test (dial tone and ANI)
- Close the order (NTEC)
- Close the order (SSC)

Fallout:
It is assumed that fallout of the order will occur 2% of the time to the CPC Center because it is a designed service. The activities include the following:
- Pull and analyze the order
- Clear the jeopardy - Manual design process

Notes: The IDF/TDF and LDPF (Cosmic-Type) are illustrated as 2 appearances on one frame to identify the cross-connect. If circuit is ISDN/BRI in the above example (different CO), then it is assumed that 3 BRITE Channel Units are installed as opposed to 1 FX Channel Unit installed if it is a POTS voice circuit.

Element Type 26: 2 Wire Loop – Different (Foreign) Central Office – (Disconnect)

Definition: A 2 Wire point-to-point designed circuit that is similar in design to a 2-wire FX circuit in that it is multiplexed up to a DS1 Transport on AD4 (Z office) and DCS (A office), and transported to another office where the CLEC physically collocates.

Objective: Disconnect a 2 Wire Local Loop service for a CLEC customer in a different CO.

Environment: Disconnect UNE-Loop (see Model description for UNE-Loop description)

Key Drivers of Cost:
Variable Input

- Labor Rate
- Variable Overhead
- Fallout
- Copper Loop Percentage
- Average Trip Time
- Number of Work Activities per Trip
- CO Staffed Ratio

Work Value Input

- Manual Work Step Times

High Level Process Overview:

Transmission Type: Analog x Digital x.
Unbundled Loop: Yes x No __.
Examples of service used on this element type:
Foreign Exchange (FX)
POTS; ISDN/BRI
1FB, 1FR; 1MB, 1MR

Time Estimates: Activity times are based on estimates by a panel of Subject Matter Experts.

Sample Output: See Attachment B

Detailed Work Activities: See Attachment C

Detailed Work Activity Descriptions:
Technical Description:

There may be situations where the CLEC may choose not to collocate in the same wire center serving the end user customer. This circuit, by its nature constitutes a designed circuit. If the 2-wire loop serves the end-user from a different CO or wire center, SMAS test points are modeled with unitized SMAS in the AD4 (ADTS). DS1 Inter Office Facilities (IOF) are used.
In the event that channel banks are a necessity (provided over what is considered DS0 Transport), as is the case of a 2-wire loop (analog or digital) served from a different CO or wire center than the end-user is currently served from (or physical collocation in a different wire center), a forward-looking automated D4 such as an AD4 Automated Digital Terminal System (ADTS[58]) should be assumed in the Z-office or wire center serving the end-user customer. An AD4 is considered a Processor Controlled Network Element (PCNE), supports multi-function channel units, and can be provisioned, monitored, tested, and inventoried from upstream ILEC legacy OSS systems. In this scenario, the SMAS points are assumed to

58 ADTS requirements and objectives can be found in Bellcore's TR-TSY-000174.

be unitized with the associated maintenance-connectors and cabling hardwired into the AD4 seven (7) foot or eleven (actually 11'6") foot bays (see Exhibits below). Conversely, it is also assumed that in the office where the CLEC has decided to collocate (A-office), that the DS1 IOF is terminated on a DCS, and that a DS1 CFA is handed off to the collocated space from the DCS. Consequently, the crossconnect (DS1) in the DCS is assumed to be electronic (CPU time) and flows-through from upstream OSS systems (TIRKS, NSDB, OPS/INE). As a result of a designed service, the upstream OSS systems (e.g., TIRKS/FEPS) and appropriate work groups (e.g., NTEC,) are also assumed. *Finally, in the above scenario (different CO), the multiplexed (to DS0) DS1 and associated Multiplexer (AD4) is considered to be a DS1/DS0 Transport element.*

Disconnect:

- Use of WFA
- Pull and analyze the order (NTEC)
- Pull and analyze the order (SSC)
- 4-Work Activities per trip
- Trip time to non-staffed CO
- Travel time within the CO
- Monitor circuit for traffic busy and correct assignment
- Remove cross-connect, wire wrap to AD4 Channel Bank (ADTS)/Unitized SMAS
- Remove cross-connects on LDPF (Cosmic-Type) frame
- Close the order (NTEC)
- Close the order (SSC)

Fallout:

It is assumed that fallout of the order will occur 2% of the time to the CPC Center because it is a designed service. The activities include the following:

- Pull and analyze the order
- Resolve fallout

Element Type 27: 4 Wire Loop – Different (Foreign) Central Office – (Migration)

Definition: A 4 Wire designed point-to-point designed circuit that is similar in design to a 4 wire voice or data circuit, in that it is multiplexed up to a DS1 Transport on AD4 (Z office) and DCS (A office), and transported to another office where the CLEC physically collocates.

Objective: Migrate a 4 Wire Local Loop service for a CLEC end user customer who is served from a different Central Office than the central office the end user is served from currently.

Environment: Installation UNE-Loop (see Model description for UNE-Loop description)

Key Drivers of Cost:
Variable Input
- Labor Rate
- Variable Overhead
- Fallout
- Copper Loop Percentage
- Average Trip Time
- Number of Work Activities per Trip
- CO Staffed Ratio

Work Value Input
- Manual Work Step Times

High Level Process Overview:

Transmission Type: Analog x Digital x.
Unbundled Loop: Yes x No __.
Examples of service used on this element type:
DDS, 4 Wire FX, HDSL, PBX Tie Trunk, VF Data, etc.

Time Estimates: Activity times are based on estimates provided by a panel of Subject Matter Experts.

Sample Output: See Attachment B

Detailed Work Activities: See Attachment C

Detailed Work Activity Descriptions:

Technical Description:
There may be situations where the CLEC may choose not to collocate in the same wire center serving the end user customer. This circuit, by its nature constitutes a designed circuit. If the 2-wire loop serves the end-user from a different CO or wire center, SMAS test points are modeled with unitized SMAS in the AD4 (ADTS). DS1 Inter Office Facilities (IOF) are used.
In the event that channel banks are a necessity (provided over what is considered DS0 Transport), as is the case of a 2-wire loop (analog or digital) served from a different CO or wire center than the end-user is currently served from (or physical collocation in a different wire center), a forward-looking automated D4 such as an AD4 Automated Digital Terminal System (ADTS[59]) should be assumed in the Z-office or wire center serving the end-user customer. An AD4 is considered a Processor Controlled Network Element (PCNE), supports multi-function channel units, and can be provisioned, monitored, tested, and inventoried from upstream ILEC legacy OSS systems. In this scenario, the SMAS points are assumed to

59 ADTS requirements and objectives can be found in Bellcore's TR-TSY-000174.

be unitized with the associated maintenance-connectors and cabling hardwired into the AD4 seven (7) foot or eleven (actually 11'6") foot bays (see Exhibits below). Conversely, it is also assumed that in the office where the CLEC has decided to collocate (A-office), that the DS1 IOF is terminated on a DCS, and that a DS1 CFA is handed off to the collocated space from the DCS. Consequently, the crossconnect (DS1) in the DCS is assumed to be electronic (CPU time) and flows-through from upstream OSS systems (TIRKS, NSDB, OPS/INE).
As a result of a designed service, the upstream OSS systems (e.g., TIRKS/FEPS) and appropriate work groups (e.g., NTEC) are also assumed. *Finally, in the above scenario (different CO), the multiplexed (to DS0) DS1 and associated Multiplexer (AD4) is considered to be a DS1/DS0 Transport element.*

Migration:

- Use of WFA
- Pull and analyze the order (NTEC)
- Pull and analyze the order (SSC)
- 4-Work Activities per trip
- Trip time to non-staffed CO
- Negotiate customer release (CLEC with ILEC)
- Travel time within the CO
- Monitor circuit for traffic busy and correct assignment
- Cross-connect 4 wire, wire wrap, to AD4 Channel Bank/Unitized SMAS
- Terminate cross-connects on LDPF (Cosmic-Type) frame
- Conduct testing - 1000hz
- Close the order (NTEC)
- Close the order (SSC)

Fallout:
It is assumed that fallout of the order will occur 2% of the time to the CPC Center because it is a designed service. The activities include the following:

- Pull and analyze the order
- Resolve the fallout

Element Type 28: 4 Wire Loop – Different (Foreign) Central Office – (Install)

Definition: A 4 Wire designed point-to-point designed circuit that is similar in design to a 4 wire voice or data circuit, in that it is multiplexed up to a DS1 Transport on AD4 (Z office) and DCS (A office), and transported to another office where the CLEC physically collocates.

Objective: Install a 4 Wire Local Loop service for a CLEC customer in a different Central Office (CO) or wire center.

Environment: Installation UNE-Loop (see Model description for UNE-Loop description)

Key Drivers of Cost:
Variable Input
- Labor Rate
- Variable Overhead
- Fallout
- Copper Loop Percentage
- Average Trip Time
- Number of Work Activities per Trip
- CO Staffed Ratio

Work Value Input
- Manual Work Step Times

High Level Process Overview:

Transmission Type: Analog x Digital x.
Unbundled Loop: Yes x No __.
Examples of service used on this element type:
DDS, 4 Wire FX, HDSL, PBX Tie Trunk, VF Data, etc.

Time Estimates: Activity times are based on estimates provided by a panel of Subject Matter Experts.

Sample Output: See Attachment B

Detailed Work Activities: See Attachment C

Detailed Work Activity Descriptions:

Technical Description:
There may be situations where the CLEC may choose not to collocate in the same wire center serving the end user customer. This circuit, by its nature constitutes a designed circuit. If the 2-wire loop serves the end-user from a different CO or wire center, SMAS test points are modeled with unitized SMAS in the AD4 (ADTS). DS1 Inter Office Facilities (IOF) are used.
In the event that channel banks are a necessity (provided over what is considered DS0 Transport), as is the case of a 2-wire loop (analog or digital) served from a different CO or wire center than the end-user is currently served from (or physical collocation in a different wire center), a forward-looking automated D4 such as an AD4 Automated Digital Terminal System (ADTS[60]) should be assumed in the Z-office or wire center serving the end-user customer. An AD4 is considered a Processor Controlled Network Element (PCNE), supports multi-function channel units, and can be provisioned, monitored, tested, and inventoried from upstream ILEC legacy OSS systems. In this scenario, the SMAS points are assumed to be unitized with the associated maintenance-connectors and cabling hardwired into the AD4 seven (7)

60 ADTS requirements and objectives can be found in Bellcore's TR-TSY-000174.

foot or eleven (actually 11'6") foot bays (see Exhibits below). Conversely, it is also assumed that in the office where the CLEC has decided to collocate (A-office), that the DS1 IOF is terminated on a DCS, and that a DS1 CFA is handed off to the collocated space from the DCS. Consequently, the crossconnect (DS1) in the DCS is assumed to be electronic (CPU time) and flows-through from upstream OSS systems (TIRKS, NSDB, OPS/INE).
As a result of a designed service, the upstream OSS systems (e.g., TIRKS/FEPS) and appropriate work groups (e.g., NTEC) are also assumed. *Finally, in the above scenario (different CO), the multiplexed (to DS0) DS1 and associated Multiplexer (AD4) is considered to be a DS1/DS0 Transport element.*

Installation:
- Use of WFA
- Pull and analyze the order (NTEC)
- Pull and analyze the order (SSC)
- 4-Work Activities per trip
- Trip time to non-staffed CO
- Travel within the CO
- Cross-connect 4 wire, wire wrap, to AD4 Channel Bank/Unitized SMAS
- Terminate cross-connects on LDPF (Cosmic-Type) frame
- Conduct testing - 1000hz
- Close the order (NTEC)
- Close the order (SSC)

Fallout:
It is assumed that fallout of the order will occur 2% of the time to the CPC Center because it is a designed service. The activities include the following:
- Pull and analyze the order
- Resolve the fallout

Element Type 29: 4 Wire Loop – Different (Foreign) Central Office – (Disconnect)

Definition: A 4 Wire point-to-point designed circuit that is similar in design to a 4-wire voice or data circuit in that it is multiplexed up to a DS1 Transport on AD4 (Z office) and DCS (A office), and transported to another office where the CLEC physically collocates.

Objective: Disconnect a 4 Wire Local Loop service for a CLEC customer in a different CO.

Environment: Disconnect UNE-Loop (see Model description for UNE-Loop description)

Key Drivers of Cost:
Variable Input

- Labor Rate
- Variable Overhead
- Fallout
- Copper Loop Percentage
- Average Trip Time
- Number of Work Activities per Trip
- CO Staffed Ratio

Work Value Input

- Manual Work Step Times

High Level Process Overview:

Transmission Type: Analog x Digital x.
Unbundled Loop: Yes x No __.

Examples of service used on this element type:

DDS
VF Data
PBX Tie Trunk
HDSL

Time Estimates: Activity times are based on estimates by a panel of Subject Matter Experts.

Sample Output: See Attachment B

Detailed Work Activities: See Attachment C

Detailed Work Activity Descriptions:

Technical Description:

There may be situations where the CLEC may choose not to collocate in the same wire center serving the end user customer. This circuit, by its nature constitutes a designed circuit. If the 2-wire loop serves the end-user from a different CO or wire center, SMAS test points are modeled with unitized SMAS in the AD4 (ADTS). DS1 Inter Office Facilities (IOF) are used.
In the event that channel banks are a necessity (provided over what is considered DS0 Transport), as is the case of a 2-wire loop (analog or digital) served from a different CO or wire center than the end-user is currently served from (or physical collocation in a different wire center), a forward-looking automated D4 such as an AD4 Automated Digital Terminal System (ADTS[61]) should be assumed in the Z-office or wire

61 ADTS requirements and objectives can be found in Bellcore's TR-TSY-000174.

center serving the end-user customer. An AD4 is considered a Processor Controlled Network Element (PCNE), supports multi-function channel units, and can be provisioned, monitored, tested, and inventoried from upstream ILEC legacy OSS systems. In this scenario, the SMAS points are assumed to be unitized with the associated maintenance-connectors and cabling hardwired into the AD4 seven (7) foot or eleven (actually 11'6") foot bays (see Exhibits below). Conversely, it is also assumed that in the office where the CLEC has decided to collocate (A-office), that the DS1 IOF is terminated on a DCS, and that a DS1 CFA is handed off to the collocated space from the DCS. Consequently, the crossconnect (DS1) in the DCS is assumed to be electronic (CPU time) and flows-through from upstream OSS systems (TIRKS, NSDB, OPS/INE).
As a result of a designed service, the upstream OSS systems (e.g., TIRKS/FEPS) and appropriate work groups (e.g., NTEC, SSC) are also assumed. *Finally, in the above scenario (different CO), the multiplexed (to DS0) DS1 and associated Multiplexer (AD4) is considered to be a DS1/DS0 Transport element.*

Disconnect:

- Use of WFA
- Pull and analyze the order (NTEC)
- Pull and analyze the order (SSC)
- 4-Work Activities per trip
- Trip time to non-staffed CO
- Travel within the CO
- Monitor circuit for traffic busy and correct assignment
- Remove cross-connects on LDPF (Cosmic-Type) frame, 1-4 wire
- Remove cross-connect - wire wrap to AD4 Channel Bank (ADTS)/Unitized SMAS
- Remove cross-connect (4 wire SMAS, wire wrap, to AD4 Channel Bank/Unitized SMAS)
- Close the order (NTEC)
- Close the order (SSC)

Fallout:
It is assumed that fallout of the order will occur 2% of the time to the CPC Center because it is a designed service. The activities include the following:

- Pull and analyze the order
- Resolve the fallout

Element Type 30: DS1 Loop to Customer Premise – (Migration)

Definition: A DS1 loop is a 1.544Mbps transmission facility between a subscriber's station equipment and the central office (CO).

Objective: Migrate a DS1 Loop service from an ILEC to a new entrant (CLEC)

Environment: DS1 Loop

Key Drivers of Cost:
Variable Input
- Labor Rate
- Variable Overhead
- Fallout
- Copper Loop Percentage
- Average Trip Time
- Number of Work Activities per Trip
- CO Staffed Ratio

Work Value Input
- Manual Work Step Times

High Level Process Overview:

Transmission Type: Analog _ Digital x.
Unbundled Loop: Yes x No __.
Examples of service used on this element type:
Digital Data Services (DDS)
POTS
ISDN/BRI
Special Services
DS1 Service

Time Estimates: Activity times are based on estimates by a panel of Subject Matter Experts.

Sample Output: See Attachment B

Detailed Work Activities: See Attachment C

Detailed Work Activity Descriptions:

Technical Description:
This DS1 section of the documentation will discuss 4-Wire Copper (TWP) and Integrated Digital Loop Carrier (IDLC) used to provide the DS1 digital loop.

4-Wire Copper Digital Cross connect (DS1) for the Loop

Migration:
- Use of WFA
- Pull and analyze the order (FMAC)
- Pull and analyze the order (SSC)
- 4-Work Activities per trip
- Trip time to non-staffed CO
- Negotiate customer release
- Travel time within the CO

- Install 5 wire cross-connects on DSX bay
- Perform quasi random signal source - QRSS test via remote ITS-DTAU
- Conduct loop back analysis test (Copper only) - (SSC)
- Close the order (FMAC)
- Close the order (SSC)

Fallout:
It is assumed that fallout of the order will occur 2% of the time to the CPC Center because it is a designed service. The activities include the following:
- Pull and analyze the order
- Resolve the fallout

DS1 Loop (Copper)

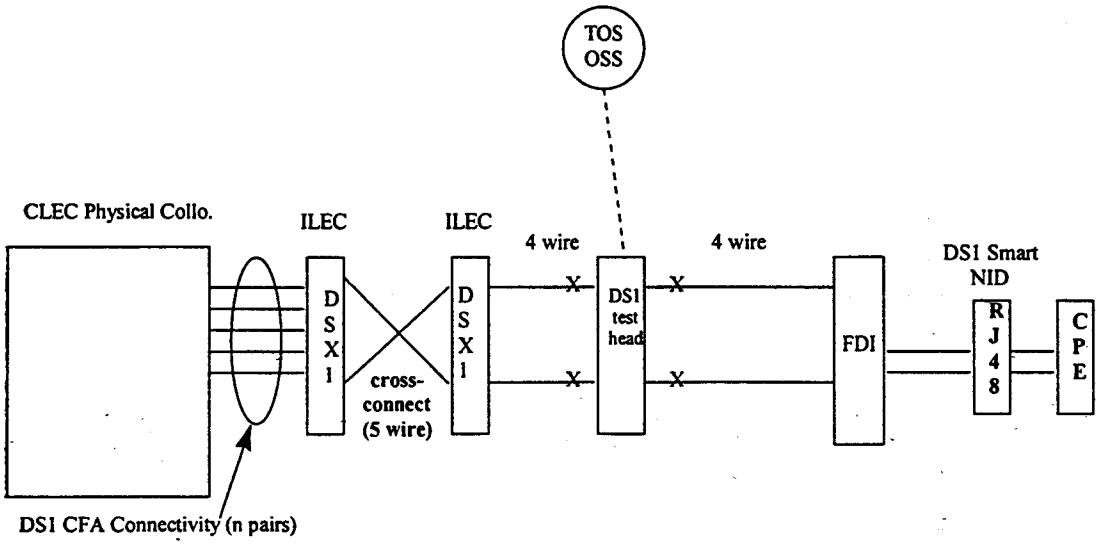

DS1 Copper Loop

4-Wire IDLC Digital Crossconnect (DS1) Loop

Migration:
- Use of WFA
- Pull and analyze the order (NTEC)
- Pull and analyze the order (SSC)
- 4-Work Activities per trip
- Trip time to non-staffed CO
- Travel time within the CO
- Install 5 wire cross-connects on DSX
- Perform quasi random signal source - QRSS test via remote ITS-DTAU
- Conduct loop back analysis test (copper only)-(SSC)
- Close the order (NTEC)
- Close the order (SSC)

Fallout:

It is assumed that fallout of the order will occur 2% of the time to the CPC Center because it is a designed service. The activities include the following:

- Pull and analyze the order
- Resolve the fallout

4 Wire Loop (TR-303 IDLC)

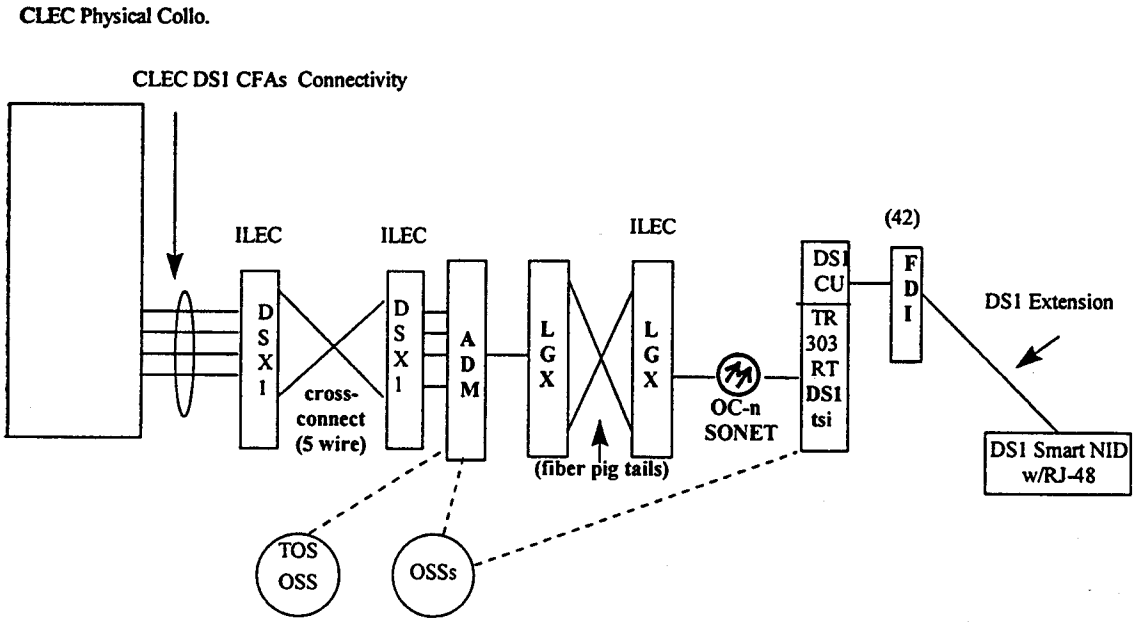

DS1 Fiber (TR-303) Loop

Element Type 31: DS1 Loop to Customer Premise – (Install)

Definition: A DS1 loop is a 1.544Mbps transmission facility between a subscriber's station equipment and the central office (CO).

Objective: Install a DS1 Loop service to a new entrant (CLEC)

Environment: DS1 Loop

Key Drivers of Cost:
Variable Input
- Labor Rate
- Variable Overhead
- Fallout
- Copper Loop Percentage
- Average Trip Time
- Number of Work Activities per Trip
- CO Staffed Ratio

Work Value Input
- Manual Work Step Times

High Level Process Overview:

Transmission Type: Analog _ Digital x.
Unbundled Loop: Yes x No __.
Examples of service used on this element type:
Digital Data Services (DDS)
POTS
ISDN/BRI
Special Services
DS1 Service

Time Estimates: Activity times are based on estimates by a panel of Subject Matter Experts.

Sample Output: See Attachment B

Detailed Work Activities: See Attachment C

Detailed Work Activity Descriptions:

Technical Description:
This DS1 section of the documentation will discuss 4-Wire Copper (TWP) and Integrated Digital Loop Carrier (IDLC) used to provide the 4-wire DS1 digital loop.

4-Wire Copper Digital Crossconnect (DS1) Loop

Installation:
- Use of WFA
- Pull and analyze the order (FMAC)
- Pull and analyze the order (SSC)
- 4-Work Activities per trip
- Trip time to non-staffed CO
- Travel time within the CO

- Install 5 wire cross-connect on DSX
- Perform quasi random signal source - QRSS test via remote ITS-DTAU
- Conduct loop back analysis test (copper only) - (SSC)
- Close the order (FMAC)
- Close the order (SSC)

Fallout:
It is assumed that fallout of the order will occur 2% of the time to the CPC Center because it is a designed service. The activities include the following:
- Pull and analyze the order
- Resolve the fallout

4-Wire IDLC Digital Crossconnect (DS1) Loop

Installation:
- Use of WFA
- Pull and analyze the order (FMAC)
- Pull and analyze the order (SSC)
- 4-Work Activities per trip
- Trip time to non-staffed CO
- Travel time within the CO
- Install 5 wire cross-connects on DSX
- Perform quasi random signal source - QRSS test via remote ITS-DTAU
- Conduct loop back analysis test (Copper only) - (SSC)
- Close the order (NTEC)
- Close the order (SSC)

Fallout:
It is assumed that fallout of the order will occur 2% of the time to the CPC Center because it is a designed service. The activities include the following:
- Pull and analyze the order
- Resolve the fallout

Element Type 32: DS1 Loop to Customer Premise – (Disconnect)

Definition: A DS1 loop is a 1.544Mbps transmission facility between a subscriber's station equipment and the central office.

Objective: Disconnect a DS1 Loop service to a new entrant (CLEC)

Environment: DS1 Loop

Key Drivers of Cost:
Variable Input
- Labor Rate
- Variable Overhead
- Fallout
- Copper Loop Percentage
- Average Trip Time
- Number of Work Activities per Trip
- CO Staffed Ratio

Work Value Input
- Manual Work Step Times

High Level Process Overview:

Transmission Type: Analog _ Digital x.

Unbundled Loop: Yes x No __.

Examples of service used on this element type:
Digital Data Service (DDS)
VF Data
Special Services
DS1 Service

Time Estimates: Activity times are based on estimates by a panel of Subject Matter Experts.

Sample Output: See Attachment B

Detailed Work Activities: See Attachment C

Detailed Work Activity Descriptions:

Technical Description:

This DS1 section of the documentation will discuss 4-Wire Copper (TWP) and Integrated Digital Loop Carrier (IDLC) used to provide the 4-wire DS1 digital loop.

4-Wire Copper Digital Crossconnect (DS1) for the Loop

Disconnect:
- Use of WFA
- Pull and analyze the order (FMAC)
- Pull and analyze the order (SSC)
- 4-Work Activities per trip
- Trip time to non-staffed CO
- Travel time within the CO

- Monitor circuit for traffic busy and correct assignment
- Remove 5 wire cross-connects on DSX
- Close the order (FMAC)
- Close the order (SSC)

Fallout:
It is assumed that fallout of the order will occur 2% of the time to the CPC Center because it is a designed service. The activities include the following:
- Pull and analyze the order
- Resolve the fallout

4-Wire IDLC Digital Crossconnect (DS1) for the Loop

Migration:
- Use of WFA
- Pull and analyze the order (FMAC)
- Pull and analyze the order (SSC)
- 4-Work Activities per trip
- Trip time to non-staffed CO
- Travel time within the CO
- Monitor circuit for traffic busy and correct assignment
- Remove 5 wire cross connect at DSX bay
- Close the order (FMAC)
- Close the order (SSC)

Fallout:
It is assumed that fallout of the order will occur 2% of the time to the CPC Center because it is a designed service. The activities include the following:
- Pull and analyze the order
- Resolve the fallout

Element Type 33: DS3 Loop (Migration)

Definition: DS3 is a 44.736Mb/s digital transmission medium which has the virtual capacity of 28 DS1's and an equivalent 672 DS0 voice and/or data circuits.

Objective: Migrate a DS3 Loop (over fiber) for a CLEC customer.

Environment: DS3 Loop (see Model Description for install DS3 loop description)

Key Drivers of Cost:
Variable Input
- Labor Rate
- Variable Overhead
- Fallout
- CO Staffed Ratio
- Average Trip Time
- Number of Work Activities per Trip

Work Value Input
- Manual Work Step Times

High Level Process Overview:

Transmission Type: Analog__ Digital x.
Unbundled Loop: Yes__ No __.
Examples of service used on this element type:
- DS3 (COAX) between a CLEC (collocated space) and an end-user (via ILEC facilities).

Time Estimates: Activity times are based on estimates provided by a panel of Subject Matter Experts.

Sample Output: See Attachment B

Detailed Work Activities: See Attachment C

Detailed Work Activity Descriptions:

Technical Description:
The following assumptions were made for DS3 Loop:
- This non-recurring cost was developed to provide the new entrant the ability to install, migrate, and purchase the capacity for DS3 Loop. The assumptions include that all DS1, DS3 Connecting Facility Assignment (CFA) terminations (also known as Expanded Interconnection Channel Terminations (CFA) are less than 655 and 450 feet, respectively. The study assumes that the SONET rings are in place (see DS1 transport for SONET diagram).
- For placement of the Plug-in or channel-units in the CO SONET mux and SONET Mux at the end-user-customer premise the costs are recovered under recurring charges. Also included in this task is the technician placing his/her wrist strap on to guard against any ESD problems.
- Technology assumes SONET fiber technology in the loop.
- SONET add-drop-multiplexor (ADM) in the CO and Customer Premise assumes that the DS3 (or STS-1) are virtual and contained within the OCn (where n = 3, 12, or 48).
- Crossconnects, Disconnects, and option settings in the SONET ADM are electronic flow-through via upstream, remote OSS systems (e.g., TIRKS, NSDB, and OPS/INE).
- The assumption of is that the DS3 loops traverse SONET fiber facilities and that DS3 electronic crossconnects are established on the SONET ADM multiplexors in both the CO and customer premise in a flow-through manner via upstream OSS Systems (e.g., TIRKS, NSDB, OPS/INE, etc.). It is also assumed that the SONET ADM is hardwired/cabled to a DSX-3 where the ILEC technician will establish a Coax crossconnect to connect to the CFA leading to the CLEC collocated space. No

office repeater bay ("ORB")[62] is required, and all new-connects, disconnects, edits, and rearrangements (rolls) are transaction based and flow through automatically via upstream OSS over a standard TL1/X.25 interface in approximately 2.0 seconds (see Bellcore GR-199-CORE. Section 2, Pg. 2-5).[63]

- The study also assumes that the performance monitoring for Error Seconds (ES), Bit Error Rate (BER), Cyclical Redundancy Check (CRC), Unavailable Seconds (UAS), Severely Error Seconds (SES), and Automatic Protection Counts (APC) have been set (per Bellcore GR-253-CORE, a module of the TSGR)[64].
- It is further assumed that DS3 was virtual over SONET Ring. It also assumed that cross connects are performed electronically, in a flow-through manner via upstream OSS systems.
  This cross connect will take 50 ms. CPU time with an acknowledgment response within 2 seconds each (see Bellcore GR-199-CORE. Section 2, Pg. 2-5).[65]
- This non-recurring charge was developed to provide the new entrant the ability to install and purchase the capacity for DS3 Loop (see figure below).

DS3 Loop

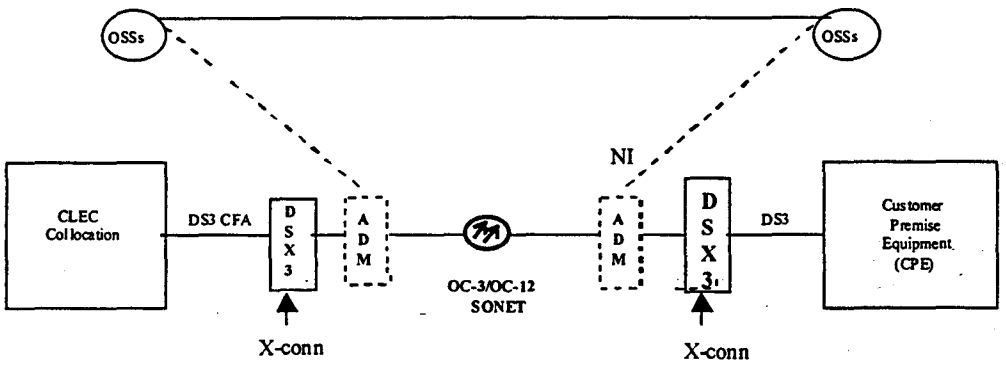

62 ORBs are required when LBO exceed the pulse template for DS1 (655') or DS3 (450').

63 Bellcore OTGR, FR-439, (TR-TSY-000199/GR-199-CORE; TL1 Specifications on Memory Administration).

64 Bellcore GR-253-CORE; SONET Requirements and Objectives (a module of the TSGR).

65 Bellcore OTGR, FR-439, (TR-TSY-000199/GR-199-CORE; TL1 Specifications on Memory Administration).

Installation:

- Use of WFA
- Pull and analyze the order (FMAC and SSC)
- Perform COAX (BNC Connectorized) Migration Crossconnect at DSX-3 panels to CFA interface.
- Perform remote PRSB15 or B3ZS test
- Retrieve and analyze PM data (NMA) test (BER, ES, etc) for 100% of the time
- Perform Intrusive test as required : R
- Close the order (FMAC and SSC)

Fallout:

It is assumed that fallout of the order will occur 2%of the time to the CPC Center because it is a DS3 designed service. The activities include the following:

- Pull and analyze the order
- Clear the jeopardy

Element Type 34: DS3 Loop (Install)

Definition: DS3 is a 44.736Mb/s digital transmission medium which has the virtual capacity of 28 DS1's and an equivalent 672 DS0 voice and/or data circuits.

Objective: Install a DS3 Loop (over fiber) for a CLEC customer.

Environment: DS3 Loop (see Model Description for install DS3 loop description)

Key Drivers of Cost:
Variable Input
- Labor Rate
- Variable Overhead
- Fallout
- CO Staffed Ratio
- Average Trip Time
- Number of Work Activities per Trip

Work Value Input
- Manual Work Step Times

High Level Process Overview:

Transmission Type: Analog__ Digital x.
Unbundled Loop: Yes__ No __.
Examples of service used on this element type:
- DS3 (COAX) between a CLEC (collocated space) and an end-user (via ILEC facilities).

Time Estimates: Activity times are based on estimates provided by a panel of Subject Matter Experts.

Sample Output: See Attachment B

Detailed Work Activities: See Attachment C

Detailed Work Activity Descriptions:

Technical Description:
The following assumptions were made for DS3 Loop:
- This non-recurring cost was developed to provide the new entrant the ability to install and purchase the capacity for DS3 Loop. The assumptions include that all DS1, DS3 Connecting Facility Assignment (CFA) terminations (also known as Expanded Interconnection Channel Terminations (CFA) are less than 655 and 450 feet, respectively. The study assumes that the SONET rings are in place (see DS1 transport for SONET diagram).
- For placement of the Plug-in or channel-units in the CO SONET mux and SONET Mux at the end-user-customer premise the costs are recovered under recurring charges. Also included in this task is the technician placing his/her wrist strap on to guard against any ESD problems.
- Technology assumes SONET fiber technology in the loop.
- SONET add-drop-multiplexor (ADM) in the CO and Customer Premise assumes that the DS3 (or STS-1) are virtual and contained within the OCn (where n = 3, 12, or 48).
- Crossconnects, Disconnects, and option settings in the SONET ADM are electronic flow-through via upstream, remote OSS systems (e.g., TIRKS, NSDB, and OPS/INE).
- The assumption of is that the DS3 loops traverse SONET fiber facilities and that DS3 electronic crossconnects are established on the SONET ADM multiplexors in both the CO and customer premise in a flow-through manner via upstream OSS Systems (e.g., TIRKS, NSDB, OPS/INE, etc.). It is also assumed that the SONET ADM is hardwired/cabled to a DSX-3 where the ILEC technician will establish a Coax crossconnect to connect to the CFA leading to the CLEC collocated space. No

office repeater bay ("ORB")[66] is required, and all new-connects, disconnects, edits, and rearrangements (rolls) are transaction based and flow through automatically via upstream OSS over a standard TL1/X.25 interface in approximately 2.0 seconds (see Bellcore GR-199-CORE. Section 2, Pg. 2-5).[67]

- The study also assumes that the performance monitoring for Error Seconds (ES), Bit Error Rate (BER), Cyclical Redundancy Check (CRC), Unavailable Seconds (UAS), Severely Error Seconds (SES), and Automatic Protection Counts (APC) have been set (per Bellcore GR-253-CORE, a module of the TSGR)[68].
- It is further assumed that DS3 was virtual over SONET Ring. It also assumed that cross connects are performed electronically, in a flow-through manner via upstream OSS systems.
  This cross connect will take 50 ms. CPU time with an acknowledgment response within 2 seconds each (see Bellcore GR-199-CORE. Section 2, Pg. 2-5).[69]
- This non-recurring charge was developed to provide the new entrant the ability to install and purchase the capacity for DS3 Loop (see figure below).

Installation:

- Use of WFA
- Pull and analyze the order (FMAC and SSC)
- Trip time to non-staffed CO : R
- Install plug-in equipment on high speed SONET Mux in CO and Customer Premise (Cost recovered elsewhere).
- Perform COAX (BNC Connectorized) Crossconnect at DSX-3 panels to CFA interface.
- Install plug-in equipment on 2 SONET ADM (Cost recovered elsewhere)
- OSS (OPS/INE) CPU electronic cross-connect/mapping time for 2 SONET ADM/LTE.
- Perform remote PRSB15 or B3ZS test
- Retrieve and analyze PM data (NMA) test (BER, ES, etc) for 100% of the time
- Perform Intrusive test as required : R
- Continuity verification cross-office test done via COMPL/CTAG response included in 2 acknowledgment response
- Close the order (FMAC and SSC)

Fallout:

It is assumed that fallout of the order will occur 2%of the time to the CPC Center because it is a DS3 designed service. The activities include the following:

- Pull and analyze the order
- Clear the jeopardy

---

66 ORBs are required when LBO exceed the pulse template for DS1 (655') or DS3 (450').

67 Bellcore OTGR, FR-439, (TR-TSY-000199/GR-199-CORE; TL1 Specifications on Memory Administration).

68 Bellcore GR-253-CORE; SONET Requirements and Objectives (a module of the TSGR).

69 Bellcore OTGR, FR-439, (TR-TSY-000199/GR-199-CORE; TL1 Specifications on Memory Administration).

Element Type 35: DS3 Loop (Disconnect)

Definition: DS3 is a 44.736Mb/s digital transmission medium which has the virtual capacity of 28 DS1's and an equivalent 672 DS0 voice and/or data circuits.

Objective: Install a DS3 Loop (over fiber) for a CLEC customer.

Environment: DS3 Loop (see Model Description for install DS3 loop description)

Key Drivers of Cost:
Variable Input
- Labor Rate
- Variable Overhead
- Fallout
- CO Staffed Ratio
- Average Trip Time
- Number of Work Activities per Trip

Work Value Input
- Manual Work Step Times

High Level Process Overview:

Transmission Type: Analog__ Digital x.
Unbundled Loop: Yes__ No __.
Examples of service used on this element type:
- DS3 (COAX) between a CLEC (collocated space) and an end-user (via ILEC facilities).

Time Estimates: Activity times are based on estimates provided by a panel of Subject Matter Experts.

Sample Output: See Attachment B

Detailed Work Activities: See Attachment C

Detailed Work Activity Descriptions:

Technical Description:
The following assumptions were made for DS3 Loop:
- This non-recurring cost was developed to provide the new entrant the ability to install and purchase the capacity for DS3 Loop. The assumptions include that all DS1, DS3 Connecting Facility Assignment (CFA) terminations (also known as Expanded Interconnection Channel Terminations (CFA) are less than 655 and 450 feet, respectively. The study assumes that the SONET rings are in place (see DS1 transport for SONET diagram).
- For placement of the Plug-in or channel-units in the CO SONET mux and SONET Mux at the end-user-customer premise the costs are recovered under recurring charges. Also included in this task is the technician placing his/her wrist strap on to guard against any ESD problems.
- Technology assumes SONET fiber technology in the loop.
- SONET add-drop-multiplexor (ADM) in the CO and Customer Premise assumes that the DS3 (or STS-1) are virtual and contained within the OCn (where n = 3, 12, or 48).
- Crossconnects, Disconnects, and option settings in the SONET ADM are electronic flow-through via upstream, remote OSS systems (e.g., TIRKS, NSDB, and OPS/INE).
- The assumption of is that the DS3 loops traverse SONET fiber facilities and that DS3 electronic crossconnects are established on the SONET ADM multiplexors in both the CO and customer premise in a flow-through manner via upstream OSS Systems (e.g., TIRKS, NSDB, OPS/INE, etc.). It is also assumed that the SONET ADM is hardwired/cabled to a DSX-3 where the ILEC technician will establish a Coax crossconnect to connect to the CFA leading to the CLEC collocated space. No

office repeater bay ("ORB")[70] is required, and all new-connects, disconnects, edits, and rearrangements (rolls) are transaction based and flow through automatically via upstream OSS over a standard TL1/X.25 interface in approximately 2.0 seconds (see Bellcore GR-199-CORE. Section 2, Pg. 2-5).[71]

- The study also assumes that the performance monitoring for Error Seconds (ES), Bit Error Rate (BER), Cyclical Redundancy Check (CRC), Unavailable Seconds (UAS), Severely Error Seconds (SES), and Automatic Protection Counts (APC) have been set (per Bellcore GR-253-CORE, a module of the TSGR)[72].
- It is further assumed that DS3 was virtual over SONET Ring. It also assumed that cross connects are performed electronically, in a flow-through manner via upstream OSS systems.
  This cross connect will take 50 ms. CPU time with an acknowledgment response within 2 seconds each (see Bellcore GR-199-CORE. Section 2, Pg. 2-5).[73]
- This non-recurring charge was developed to provide the new entrant the ability to install and purchase the capacity for DS3 Loop (see figure below).

Installation:

- Use of WFA
- Pull and analyze the order (FMAC and SSC)
- Trip time to non-staffed CO : R
- Remove COAX (BNC Connectorized) Crossconnect at DSX-3 panels to CFA interface.
- OSS (OPS/INE) CPU electronic disconnect time for 2 SONET ADM/LTE.
- Verification of disconnect via COMPL/CTAG response included in 2 acknowledgment response
- Close the order (FMAC and SSC)

Fallout:

It is assumed that fallout of the order will occur 2%of the time to the CPC Center because it is a DS3 designed service. The activities include the following:

- Pull and analyze the order
- Clear the jeopardy

---

70 ORBs are required when LBO exceed the pulse template for DS1 (655') or DS3 (450').

71 Bellcore OTGR, FR-439, (TR-TSY-000199/GR-199-CORE; TL1 Specifications on Memory Administration).

72 Bellcore GR-253-CORE; SONET Requirements and Objectives (a module of the TSGR).

73 Bellcore OTGR, FR-439, (TR-TSY-000199/GR-199-CORE; TL1 Specifications on Memory Administration).

Element Type 36: Line Port; DS0 - Analog LU or Digital ISLU – (Install)

Definition: This 2 Wire unbundled line port provides a 2 wire twisted pair (TWP) path between the ILEC Local Digital Switch (LDS) and the CLEC Collocation space and will support POTS or ISDN/BRI services.

Objective: Install a Line Port from the ILEC LDS switch (5ESS) to the CLEC

Key Drivers of Cost:
Variable Input
- Labor Rate
- Variable Overhead
- Fallout
- Copper Port Percentage
- Average Trip Time
- Number of Work Activities per Trip
- CO Staffed Ratio

Work Value Input
- Manual Work Step Times

High Level Process Overview:

Transmission Type: Analog x Digital x.
Unbundled Port: Yes x No __.
Examples of service used on this element type:
POTS
ISDN/BRI

Time Estimates: Activity times are based on estimates provided by a panel of Subject Matter Experts.

Sample Output: See Attachment B

Detailed Work Activities: See Attachment C

Detailed Work Activity Descriptions:

Technical Description:
This 2-wire unbundled line port supports 2-wired twisted pair (TWP) as its transmission media. It models a POTS line unit (LU) or ISDN/BRI line unit (ISLU). The investments for the ISLU, LU, and associated PICBs and PIDBs are recovered in the recurring costs modeled in SCIS. Recent Change line translations, and a 2-wire cross-connect at the LDPF (Cosmic-Type) - in order to connect to the CFA and physical collocation - are also modeled (see exhibit below).

Installation:
- Use of WFA
- Pull and analyze the order
- 4-Work Activities per trip
- Trip time to non-staffed CO
- Install 2-wire cross-connect from MDF to CFA appearance
- Close the order

Fallout:

It is assumed that fallout of the order will occur 2% of the time to the RCMAC. The activities include the following:

- Pull and analyze the order
- Clear the jeopardy

2 Wire (POTS or ISDN/BRI) Unbundled Line Port

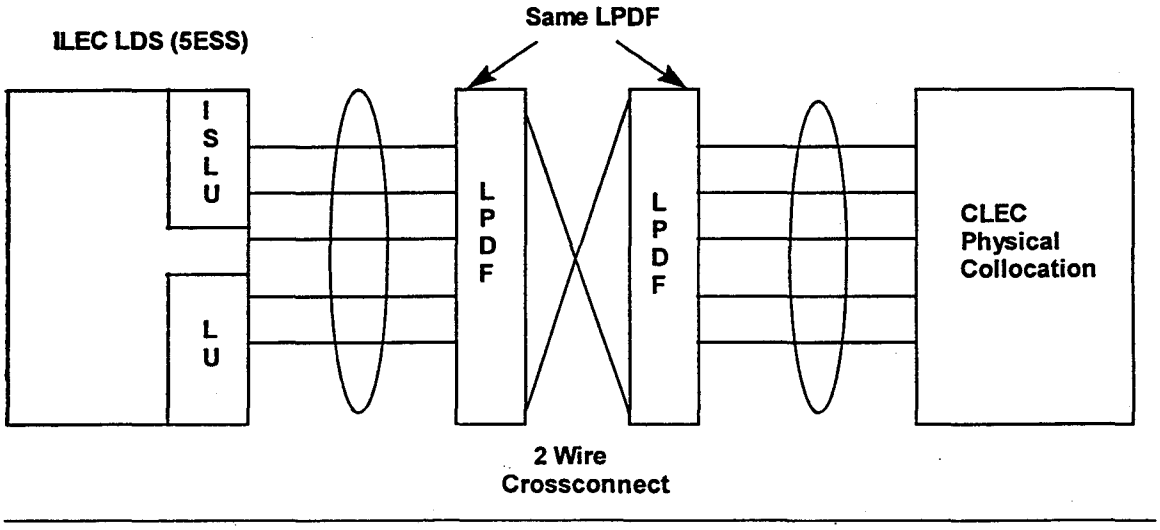

Element Type 37: Line Port; DS0 – Analog LU or Digital ISLU/IDT – (Disconnect)

Definition: This 2 Wire unbundled line port provides a 2 wire twisted pair (TWP) path between the ILEC Local Digital Switch (LDS) and the CLEC Collocation space and will support POTS and ISDN/BRI services.

Objective: Remove a DS0 Line Port from the ILEC LDS switch (5ESS) to the CLEC

Environment:

Key Drivers of Cost:

Variable Input
- Labor Rate
- Variable Overhead
- Fallout
- Copper Loop Percentage
- Average Trip Time
- Number of Work Activities per Trip
- CO Staffed Ratio

Work Value Input
- Manual Work Step Times

High Level Process Overview:

Transmission Type: Analog x Digital x.
Unbundled Port: Yes x No __.
Examples of service used on this element type:
POTS
ISDN/BRI
1MB, 1MR; 1FB, 1FR

Time Estimates: Activity times are based on estimates by a panel of Subject Matter Experts.

Sample Output: See Attachment B

Detailed Work Activities: See Attachment C

Detailed Work Activity Descriptions:

Technical Description:

This 2-wire unbundled line port supports 2-wired twisted pair (TWP) as its transmission media. It models a POTS line unit (LU) or ISDN/BRI line unit (ISLU). The investments for the ISLU, LU, and associated PICBs and PIDBs are recovered in the recurring costs modeled in SCIS. Recent Change line translations, and a 2-wire cross-connect at the LDPF (Cosmic-Type) - in order to connect to the CFA and physical collocation - are also modeled (see exhibit below).

Disconnect:
- Use of WFA
- Pull and analyze the order
- Trip time to non-staffed CO
- 4-Work Activities per trip
- Disconnect 2-wire cross-connect at LDPF (Cosmic-Type)

- Close the order

Fallout:
It is assumed that fallout of the order will occur 2% of the time to the RCMAC. The activities include the following:

- Pull and analyze the order (2.5 minutes)
- Clear the jeopardy (15 minutes)

Element Type 38: Channelized DS1 Line Port; TR-303 IDCU/IDT – (Install)

Definition: A channelized DS1 line port provides a path for 24 DS0's (POTS or ISDN/BRI) between the Integrated Digital Carrier Unit (IDCU/IDT) in the Local Digital Switch (LDS) and the CLEC Collocation space. The DS1 is initially provisioned and then 24 DS0's are migrated or augmented electronically onto the DS1 via recent change translations.

Objective: Install a DS1 channelized line port from the ILEC LDS switch to the CLEC collocation area.
Key Drivers of Cost:
Variable Input

- Labor Rate
- Variable Overhead
- Fallout
- Copper Port Percentage
- Average Trip Time
- Number of Work Activities per Trip
- CO Staffed Ratio

Work Value Input

- Manual Work Step Times

High Level Process Overview:

Transmission Type: Analog _ Digital x.
Unbundled Port: Yes x No __.
Examples of service used on this element type:
POTS
ISDN/BRI

Time Estimates: Activity times are based on estimates by a panel of Subject Matter Experts.

Sample Output: See Attachment B

Detailed Work Activities: See Attachment C

Detailed Work Activity Descriptions:
Technical Description:

With TR-303 IDLC, the SONET Optical Carrier 3 ("OC3") Fiber Feeder terminates (point to point or ring) on the Remote Terminal (RT). Typically, DS1 Traffic terminates on Integrated Digital Terminal ("IDT") and to a SONET Add Drop Multiplexer ("ADM"), both of which are located in the Wire Center. Because the technology is integrated, there is no need for a physical jumper for a DS0 between the ADM and collocated space. Only a DS1 is initially provisioned, and then the 24 DS0 channels are migrated or rolled electronically on the DS1. As the DS1 becomes full, then the DS1 is augmented for another 24 DS0 channels or time-slots (see exhibit on the following page).

Installation:

- Use of WFA
- Pull and analyze the order
- 4-Work Activities per trip
- Trip time to non-staffed CO Travel time within the CO
- Install 5 wire cross-connect at DSX
- Perform quasi random signal source - QRSS test via remote ITS-DTAU
- Close the order

Fallout:
It is assumed that fallout of the order will occur 2% of the time to the CPC. The activities include the following:

- Pull and analyze the order
- Clear the jeopardy

2 Wire (POTS or ISDN/BRI) Unbundled TR303 (IDLC) Line

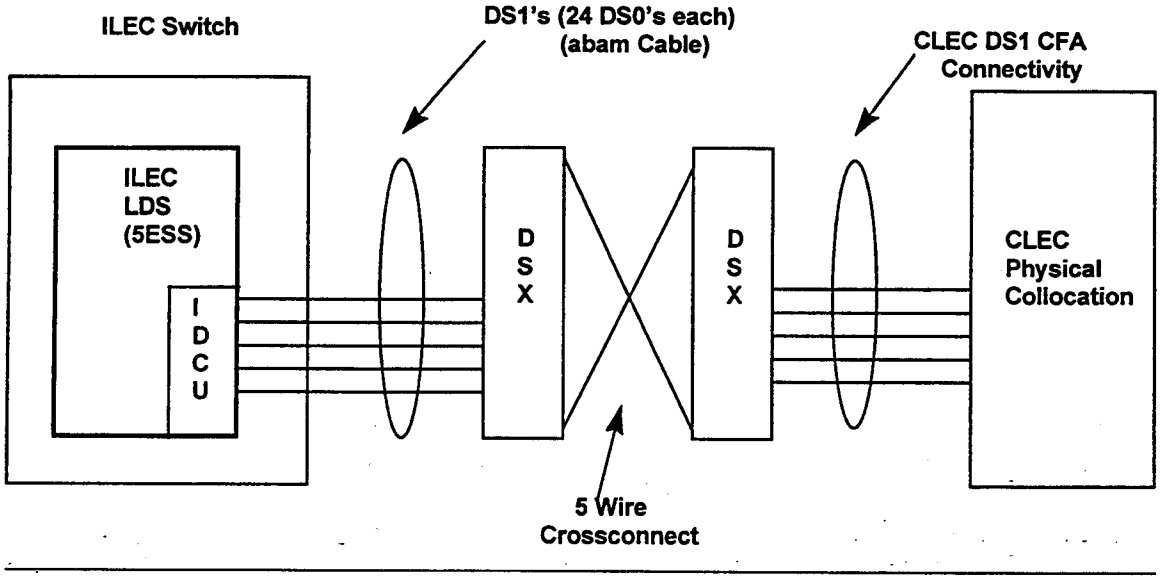

Element Type 39: Channelized DS1 Line Port (TR-303 IDCU/IDT) - Disconnect

Definition: A channelized DS1 line port provides a path for 24 DS0's between the Integrated Digital Line Unit (IDCU/IDT) in the Local Digital Switch (LDS) and the CLEC Collocation space. The DS1 is initially provisioned and then 24 DS0's are migrated and/or augmented electronically to the DS1 via recent change translations.

Objective: Disconnect a DS1 channelized line port from the ILEC switch to the CLEC collocation area.

Environment:

Key Drivers of Cost:
Variable Input
- Labor Rate
- Variable Overhead
- Fallout
- Copper Loop Percentage
- Average Trip Time
- Number of Work Activities per Trip
- CO Staffed Ratio

Work Value Input
- Manual Work Step Times

High Level Process Overview:

Transmission Type: Analog _ Digital x.
Unbundled Loop: Yes x No __.
Examples of service used on this element type:
POTS
ISDN/BRI
IMB, IMR; 1FB, 1FR

Time Estimates: Activity times are based on estimates by a panel of Subject Matter Experts.

Sample Output: See Attachment B

Detailed Work Activities: See Attachment C

Detailed Work Activity Descriptions:

Technical Description:

With TR-303 IDLC, The SONET Optical Carrier 3 ("OC3") Fiber Feeder terminates (point to point or ring) on the Remote Terminal (RT). Typically, DS1 Traffic terminates on Integrated Digital Terminal ("IDT") and to a SONET Add Drop Multiplexer ("ADM"), both of which are located in the Wire Center. Because the technology is integrated, there is no need for a physical jumper for a DS0 between the ADM and collocated space. Only a DS1 is initially provisioned, and then the 24 DS0 channels are migrated or rolled electronically on the DS1. As the DS1 becomes full, then the DS1 is augmented for another 24 DS0 channels or time-slots.

Disconnect:

- Use of WFA
- Pull and analyze the order
- 4-Work Activities per trip
- Trip time to non-staffed CO
- Monitor circuit for traffic busy and correct assignment
- Disconnect 5 wire cross-connect at DSX
- Close the order

Fallout:
It is assumed that fallout of the order will occur 2% of the time to the CPC. The activities include the following:

- Pull and analyze the order
- Clear the jeopardy

Element Type 40: Fiber Cross Connects – (Install)

Definition: A bi-directional 2 fiber, fiber-to-fiber connection through the LGX cross connect panel or fiber distribution panel (FDP).

Objective: Establish a fiber path from the collocated space to the CLEC point of interconnection (POI)

Environment:

Key Drivers of Cost:
Variable Input
- Labor Rate
- Variable Overhead
- Average Trip Time
- Number of Work Activities per Trip
- CO Staffed Ratio

Work Value Input
- Manual Work Step Times

High Level Process Overview:

Transmission Type: Analog _ Digital x.
Unbundled Loop: Yes x No __.
Examples of service used on this element type:
SONET OCn

Time Estimates: Activity times are based on estimates by a panel of Subject Matter Experts.

Sample Output: See Attachment B

Detailed Work Activities: See Attachment C

Detailed Work Activity Descriptions:

Technical Description:

The NRCs associated with the 2-Fiber Entrance Facility consists of the time it takes to install the 2 fiber connectorized pig-tails (crossconnects) at the LGX cross connect panel. The Testing is assumed to take place – at the time of construction (EF&I) - remotely via an Intelligent OTDR system (e.g., Fiber-Check 5000 [FC-5000] type system). It is further assumed that data-basing of the system as well as the creation of the templates and inventory for the OTDR (FC-5000) system, and NMA surveillance OSS system are built at the time of construction (EF&I).

Installation:
- Use of WFA
- Pull and analyze the order (FMAC)
- 4-Work Activities per trip
- Trip time to non-staffed CO
- Travel time within the CO
- Install 2 fiber pigtails at LGX by FMAC
- Close the order

Fiber Crossconnect at LGX

Fiber Crossconnect

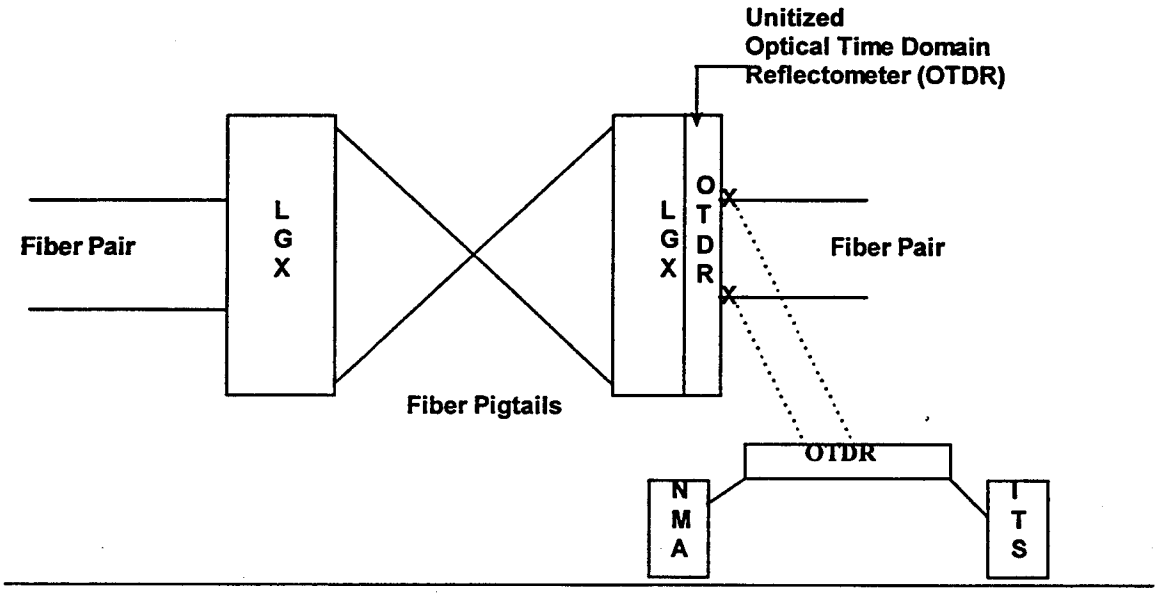

Element Type 41: Fiber Cross Connects – (Disconnect)

Definition: A bi-directional 2 fiber, fiber-to-fiber connection through the LGX cross connect panel or fiber distribution panel (FDP).

Objective: Disconnect a fiber path from the fiber loop to the CLEC point of interconnection (POI)

Environment:

Key Drivers of Cost:
Variable Input
- Labor Rate
- Variable Overhead
- Average Trip Time
- Number of Work Activities per Trip
- CO Staffed Ratio

Work Value Input
- Manual Work Step Times

High Level Process Overview:

Transmission Type: Analog _ Digital x.
Unbundled Loop: Yes x No __.
Examples of service used on this element type:
SONET OCn

Time Estimates: Activity times are based on estimates by a panel of Subject Matter Experts.

Sample Output: See Attachment B

Detailed Work Activities: See Attachment C

Detailed Work Activity Descriptions:

Technical Description:

The NRCs associated with the 2-Fiber Entrance Facility consists of the time it takes to disconnect the 2 fiber pig-tails (crossconnects) at the LGX cross connect panel.

Disconnect:
- Use of WFA
- Pull and analyze the order (FMAC)
- 4-Work Activities per trip
- Trip time to non-staffed CO
- Travel time within the CO
- Monitor circuit for traffic busy and correct assignment
- Disconnect fiber pigtails at LGX by FMAC
- Close the order FMAC

Element Type 42: SS7 Links; 56Kb/s DS0 – (Install)

Definition: A 56Kb/s DS0 SS7 signaling link between two SS7 signaling points.

Objective: Establish a DS0 signaling link for the transmission of signaling information between two SS7 signaling points.

Environment:

Key Drivers of Cost:
Variable Input
- Labor Rate
- Variable Overhead
- Fallout
- Copper Loop Percentage
- Average Trip Time
- Number of Work Activities per Trip
- CO Staffed Ratio

Work Value Input
- Manual Work Step Times

High Level Process Overview:

Transmission Type: Analog _ Digital x.
Unbundled Loop: Yes x No __.
Examples of service used on this element type:
SS7 Link

Time Estimates: Activity times are based on estimates by a panel of Subject Matter Experts.

Sample Output: See Attachment B

Detailed Work Activities: See Attachment C

Detailed Work Activity Descriptions:

Technical Description:
Telecommunication carriers use an out-of-band signaling network to carry signaling messages for the processing and routing of telephone calls. The standard signaling system used today is the signaling system seven ("SS7") protocol. The SS7 system establishes a signaling link for the transmission of signaling information between SS7 signaling points. These Signaling Elements, illustrated in the figure below, include Signaling End Points, such as Signaling Switch Points (SSP), Service Control Points (SCP), and Signal Transfer Points (STP). The SS7 Links act as conduits of SS7 messages between all signaling points.

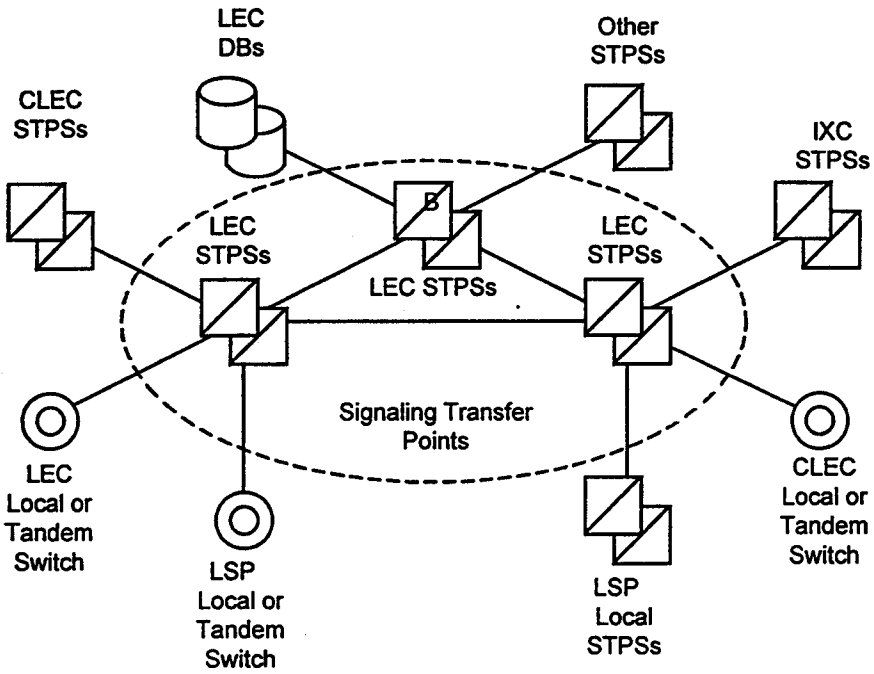

Signaling Elements

a. Signaling Links - Signaling Links are transmission facilities in a signaling network that carry "out-of-band" signaling messages,(i.e., Signaling between an end office and a Signal Transfer Point, between two signal transfer points, between a tandem switch and a signal transfer point, and between a signal transfer point and a Service Control Point). SS7 Signaling Links are characterized according to their use in the signaling network. Electrically, all links are essentially identical in that they are bi-directional data links. They can differ in speed from 56 kb/s (DS0) to 1.544 Mb/s (DS1). Access (A) links are links that interconnect an STP with a signaling end point. Today, an end point can be a SSP or a SCP. In essence the "A" link provides *access* to the SS7 signaling network. Links interconnecting two mated pairs of STPs are referred to as Diagonal (D) links whose sole function is to carry signaling traffic between signaling switches known as Signal Transfer Points (STP). "D" links connect a pair of STPs in a local network with STPs in a non-local network.

b. Signal Transfer Point ("STP") - An STP acts as a signaling switch. It enables the exchange of SS7 messages between signaling end points (e.g., SSPs and SCPs).

c. Service Control Point ("SCP") - An SCP is a database that permits the storage, access, and manipulation of information required to offer a particular service and/or capability. Deployed in an SS7 network, an SCP directs and processes informational requests and provides operational interfaces to allow for provisioning, administration and maintenance of subscriber data and service application data. (e.g., an 800 database which stores customer record data needed to route 800 calls).

d. Switching Signaling Point ("SSP") - An SSP is a local digital switch that is SS7 compatible.

SS7 Element Assumptions:

Technical Description : For this element, there are NRCs associated with SS7 "A" Link (The Service Order driven cross-connection of the DS0 (56kb/s) or DS1 (1.544Mb/s) "A" link is the NRC Recent Change STP translations). This NRC is pertaining to the Point Code-to-Link-set, MTP routing translation, and Screening translation required at the ILEC control and mate STPs for the "A" link. In the case of the STP-to-STP ("D" link) relationship, both MTP routing translations and Screening translations have to be

performed by both the ILEC and the CLEC STPs therefore mutually beneficial and an every day cost of doing business. The cost should be equal to both the ILEC and CLEC (Bill and Keep).

Installation:

- Use of WFA
- Pull and analyze order - SSC & NTEC
- Travel time to central office (non-staffed)/4 work activities
- Travel time within the CO / 4 work activities
- Cross connect (wire wrap to AD4 ADTS Channel Bank/unitized SMAS)
- Conduct SS7 test
- Conduct loop back analysis test
- Close order - SSC & NTEC

Fallout:

It is assumed that fallout of the order will occur 2% of the time to the CPC. The activities include the following:

- Pull and analyze the order
- Resolve fallout

Element Type 43: SS7 Links; 56Kb/s DS0 – (Disconnect)

Definition: A 56 Kb/s DS0 SS7 signaling link between two SS7 signaling points.

Objective: Disconnect a DS0 signaling link for the transmission of signaling information between two SS7 signaling points.

Environment:

Key Drivers of Cost:
Variable Input
- Labor Rate
- Variable Overhead
- Fallout
- Copper Loop Percentage
- Average Trip Time
- Number of Work Activities per Trip
- CO Staffed Ratio

Work Value Input
- Manual Work Step Times

High Level Process Overview:

Transmission Type: Analog _ Digital x.
Unbundled Loop: Yes x No __.
Examples of service used on this element type:
SS7 Links

Time Estimates: Activity times are based on estimates by a panel of Subject Matter Experts.

Sample Output: See Attachment B

Detailed Work Activities: See Attachment C

Detailed Work Activity Descriptions:

Please refer to 'Detailed Work Activity Descriptions' under Element Type 42.

Disconnect:
- Use of WFA
- Pull and analyze order - SSC & NTEC
- Travel time to central office (non-staffed)/4 work activities
- Travel time within the CO / 4 work activities
- Monitor circuit for traffic busy and correct assignment
- Disconnect cross connect (wire wrap to AD4 ADTS Channel Bank/unitized SMAS)
- Close order - SSC & NTEC

Fallout:

It is assumed that fallout of the order will occur 2% of the time to the CPC. The activities include the following:

- Pull and analyze the order
- Resolve fallout

Element Type 44: SS7 Links; 1.544Mb/s DS1 – (Install)

Definition: A DS1 1.544Mb/s SS7 signaling link between two SS7 signaling points.

Objective: Establish a DS1 signaling link for the transmission of signaling information between two SS7 signaling points.

Environment:

Key Drivers of Cost:
Variable Input
- Labor Rate
- Variable Overhead
- Fallout
- Copper Loop Percentage
- Average Trip Time
- Number of Work Activities per Trip
- CO Staffed Ratio

Work Value Input
- Manual Work Step Times

High Level Process Overview:

Transmission Type: Analog _ Digital x.
Unbundled Loop: Yes x No __.
Examples of service used on this element type:
SS7 Links

Time Estimates: Activity times are based on estimates by a panel of Subject Matter Experts.

Sample Output: See Attachment B

Detailed Work Activities: See Attachment C

Detailed Work Activity Descriptions:

Please refer to 'Detailed Work Activity Descriptions' under Element Type 42.

Installation:
- Use of WFA
- Pull and analyze order - FMAC
- Travel time to central office (non-staffed)/4 work activities
- Travel time within the CO / 4 work activities
- Conduct continuity test - quasi random signal source - QRSS (QRSS) from ITS/DTAU
- Retrieve and analyze performance monitoring data
- Conduct SS7 test
- Close order

Fallout:

It is assumed that fallout of the order will occur 2% of the time to the CPC. The activities include the following:

- Pull and analyze the order
- Resolve fallout

Element Type 45: SS7 Links; 1.544Mb/s DS1 – (Disconnect)

Definition: A DS1 1.544 Mb/s SS7 signaling link between two SS7 signaling points.

Objective: Disconnect a DS1 signaling link for the transmission of signaling information between two SS7 signaling points.

Environment:

Key Drivers of Cost:
Variable Input
- Labor Rate
- Variable Overhead
- Fallout
- Copper Loop Percentage
- Average Trip Time
- Number of Work Activities per Trip
- CO Staffed Ratio

Work Value Input
- Manual Work Step Times

High Level Process Overview:

Transmission Type: Analog _ Digital x.
Unbundled Loop: Yes x No __.
Examples of service used on this element type:
SS7 Links

Time Estimates: Activity times are based on estimates by a panel of Subject Matter Experts.

Sample Output: See Attachment B

Detailed Work Activities: See Attachment C

Detailed Work Activity Descriptions:

Please refer to 'Detailed Work Activity Descriptions' under Element Type 42.

Disconnect:
- Use of WFA
- Pull and analyze order - FMAC
- Travel time to central office (non-staffed)/4 work activities
- Travel time within the CO / 4 work activities
- Monitor circuit for traffic busy and correct assignment
- Close order - FMAC

Fallout:
It is assumed that fallout of the order will occur 2% of the time to the CPC. The activities include the following:
- Pull and analyze the order
- Resolve fallout