# WorldCom DSL Service

Ian Graham
Executive Director
WorldCom OnNet DSL
May 21, 2002

# WorldCom Acquisition of Rhythms Assets

WORLDCOM

- **Acquisition of Rhythms Assets was finalized in December, 2001**
  - Allows WCOM to provide facilities-based DSL services across 31 metropolitan markets
  - Complements other WCOM access methods and strengthens WCOM's broadband access portfolio
- **WorldCom has launched several products geared toward businesses (large enterprises, SMEs) and ISPs**
- **WorldCom DSL service can be incorporated into existing services (e.g. VPNs)**

# Worldcom OnNet DSL Network

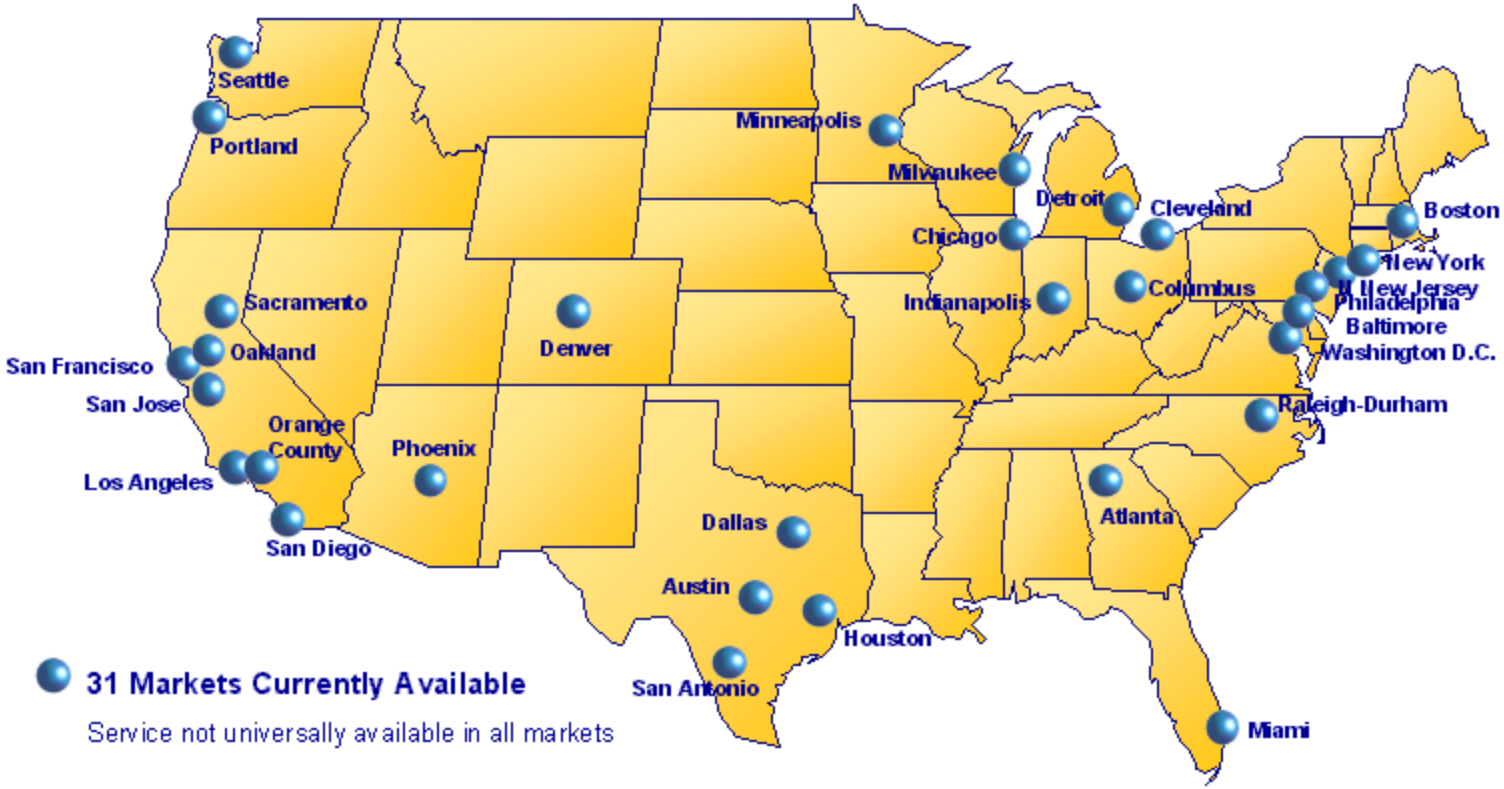


31 Markets Currently Available

Service not universally available in all markets

# What is DSL?

WORLDCOM

- Digital Subscriber Line
  - DSL technology achieves broadband speeds over ordinary phone wires
- DSL is an access technology to high speed backbone networks
  - IP (Internet)
  - Frame Relay
  - ATM
- Two implementations for the DSL Loop
  - Dry Loop – uses a dedicated loop
  - Line Share – uses existing Voice POTS line

# Dry Loop Implementation

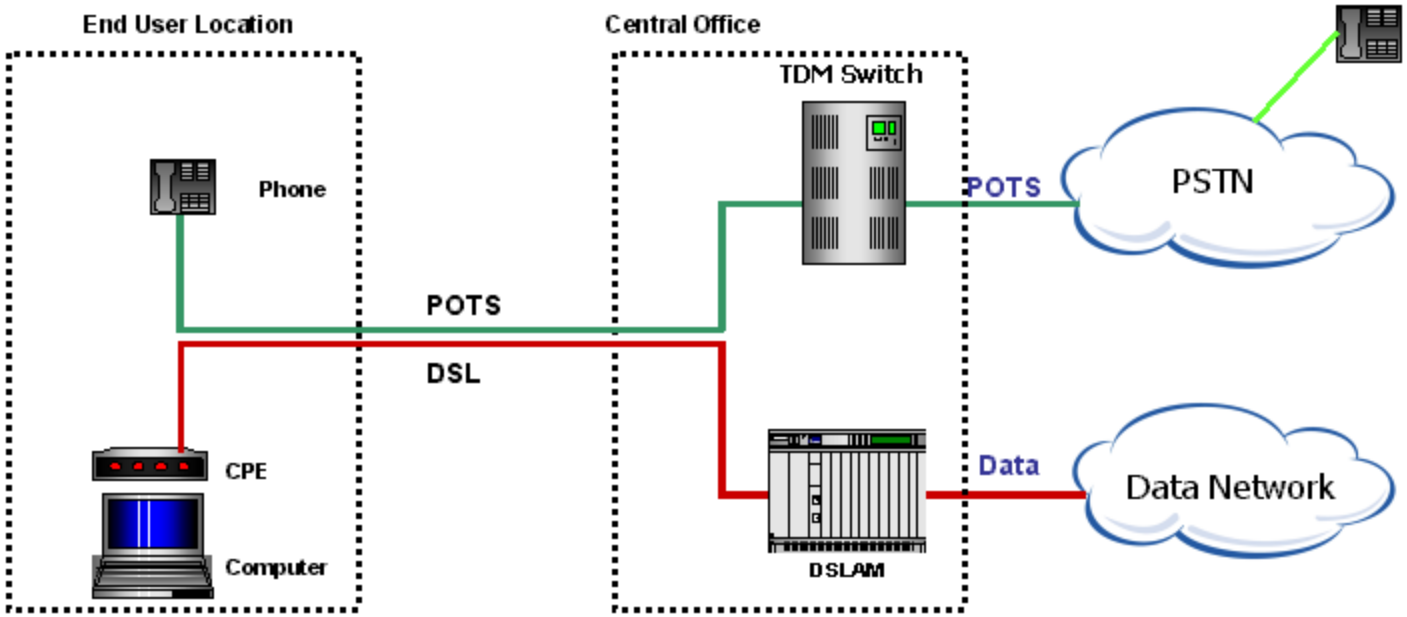


- No Splitter involved
- Requires dedicated copper-pair to carry DSL from CO to End User
- Requires truck-roll for installation (includes DSL loop, inside wire, site install)

# Line Share Implementation

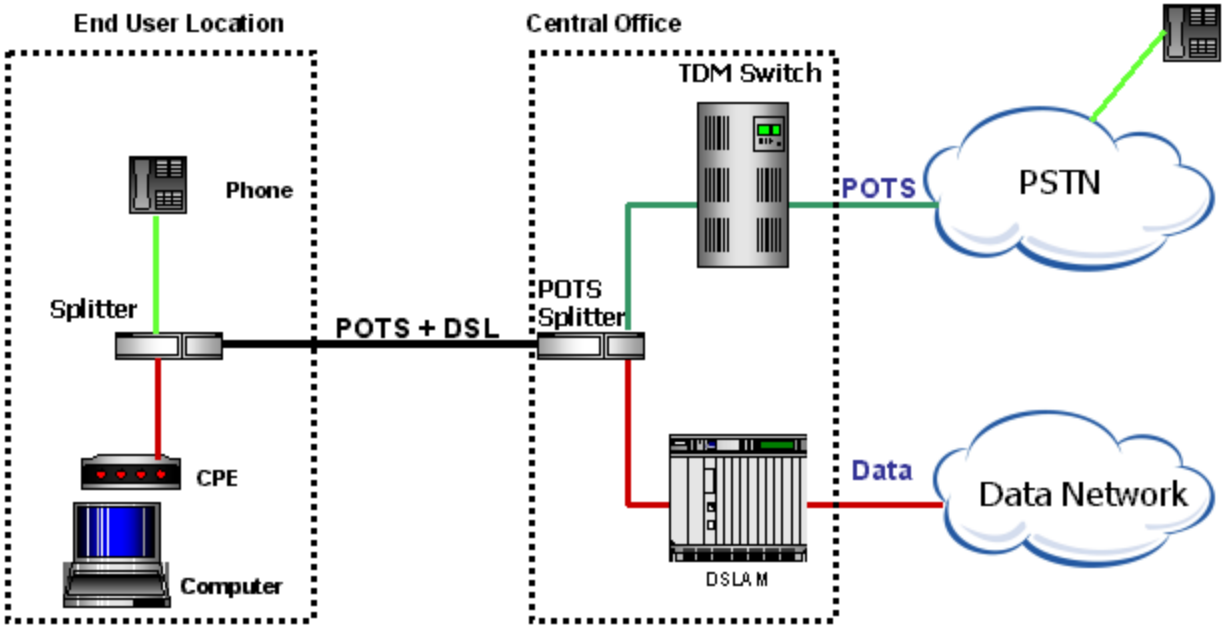


- Voice and Data Run over SAME POTS Line between CO and end user
- Consumer market uses self-installation

# WorldCom OnNet DSL

WORLDCOM

- Owned and managed facilities from DSLAM to WorldCom backbone networks (IP, Frame Relay, ATM)
- Single supplier of nationwide DSL service (facilities-based network)
- Suite of DSL services
- QoS differentiation to support business and re-sale class of service
- Product specific DSL network Service Level Agreements
- Multiple DSLAM platforms and CPE options

# WorldCom DSL Products—Business

WORLDCOM

- **Internet DSL Office**
  - Multi-user business Internet access
  - Symmetric bandwidth (128k, 384k, 768k, 1.0M), multiple static IP addresses, Routers for CPE, DNS hosting, mailboxes
  - Home Office, Small Office, Branch Offices
- **Internet DSL Solo**
  - Individual single-user business Internet access accounts
  - Asymmetric bandwidth, 2 static IP addresses, Bridges for CPE, no DNS hosting/mailboxes
  - Teleworkers, Telecommuters, Power Users

# WorldCom DSL Products—Business

WORLDCOM

- Enterprise DSL
  - Designed for business customers interested in linking various locations
    - Alternative to T1 for broadband access
    - Symmetrical bandwidth
    - Ideal for remote corporate locations, branch offices, small business, retail chains, teleworkers
  - DSL access to Frame, ATM and IP service/networks
  - Business grade DSL solutions for 128Kb to T1 speed applications

# WorldCom DSL Products—ISPs

WORLDCOM

- Private Label DSL
  - Wholesale service sold to ISPs
  - Both consumer and business-class service offerings
  - Symmetrical and Asymmetrical Speeds
  - Dynamic and Static IP addressing
  - Self-install for consumer; Onsite installations for businesses

# Advantages of WorldCom DSL

WORLDCOM

- **Competitive Option to businesses and ISPs**
  - BOCs do not serve businesses with DSL
  - Cable not sufficient for business applications
  - ISPs desire competitive terms and conditions
- **Support Range of Network Options**
  - IP (Internet)
  - Frame
  - ATM
- **Service Levels**
  - Business or consumer grade
  - Speed applications
  - Class of service options
  - Over-subscription rates
  - Network SLAs
  - Customer service
- **Value Adds**
  - VPN's
  - Coverage (nationwide vs regional)

# WCOM DSL Products Depend on UNEs

WORLDCOM

- Today, WorldCom's DSL Offerings Rely on:
  - xDSL Loops
  - Line Sharing
  - Transport (several hundred COs)
  - OSS
  - Collocation
- WorldCom cannot serve growing customer base without:
  - Line splitting (growing % of businesses and consumers)
  - Access to fiber-fed loops (about 30% of lines)