Laurence Kotlikoff
25 Tower Road
Lesington, Massachusetts 02421
617-353-4002
kotlikof@bu.edu

May 23, 2002

Electronic Filing
Ms. Marlene H. Dortch
Secretary
Federal Communications Commission
445 12th Street, SW, Room TWB-204
Washington, DC 20554

Re: In the Matter of Review of Section 251 Unbundling Obligations of Incumbent Local Exchange Carriers and Implementation of the Local Competition Provisions in the Local Telecommunications Act of 1996, CC Docket No. 96-98

Dear Ms. Dortch:

Today, I met with Dan Gonzales, Legal Adviser to Commissioner Martin, to discuss the attached paper which I distributed during the meeting. I shared the attached materials during the course of our discussion.

One electronic copy of this Notice is being submitted in accordance with the Commission's rules.

Sincerely,

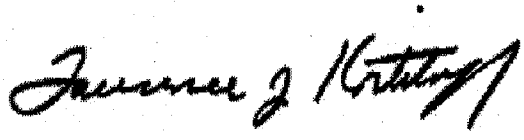

Enclosures

cc: Dan Gonzales

Laurence J. Kotlikoff
Professor of Economics
Department of Economics
Boston University
April 23, 2002

TELECOMMUNICATIONS POLICY –

PROMOTING INVESTMENT AND VIGOROUS COMPETITION[1]

Introduction

Like the rest of us, telecommunications policymakers are eager to see high-speed Internet service (broadband) spread throughout the country. But to promote this outcome, some policymakers believe we face an uncomfortable choice between investment and competition. Specifically, they claim that the only way to roll out broadband at a rapid pace is to abandon the pro-competitive provisions of the Telecom Act of 1996 (*TA96*) and hope that local Bell Operating Companies (*BOCs*) will dramatically expand broadband investment in light of their enhanced monopoly power. While supporters of TA96 view this as resurrecting all the problems TA96 was meant to fix, even they admit that TA96's implementation has yet to deliver vigorous competition in local voice and data transmission services.

Fortunately, there is a path to the future that doesn't require turning back the clock. This path entails the use of next generation technology. Its adoption would let us have our cake and eat it too. The cake here is a broadband investment boom, a highly competitive market in both local voice and data transmission, lower prices for broadband access, and, given these lower prices, widespread broadband adoption by households and small businesses.

The new technology is not a pipe dream. It's available now and can be installed at relatively low cost. Let's call this technology *ELA*, which stands for Electronic Loop Access. *Loop* refers here to the *local loop* -- the copper wire local telephone lines, telephone poles, underground conduits, and switches that connect the American public to the outside world. *Access* refers to allowing competitors to have the same physical and economically viable access to customers in providing local telephone and Internet service as the BOCs enjoy – as well as to allowing different BOC networks (e.g., data and voice) to use the physical loops. And *electronic* refers to the ability of the new technology to switch customers from one provider to another – or between voice and data services of the same provider – at the same extremely low costs, with the same speed and reliability as occurs in long distance service.

[1] This study was supported by AT&T. The opinions expressed here do not necessarily reflect the views of AT&T.

Fixing the telecom market has ramifications that range far beyond that particular sector. Our economy's growth is increasingly driven by innovations in information technology. Indeed, in the past decade, roughly two-thirds of U.S. economic growth resulted from that source.[2] Telecom plays an essential role in information acquisition and dissemination and accounts for much of the investment and innovation in the information technology sector. A vibrant telecom sector is not only vital to the long-term success of the economy. It can also play a major role in jumpstarting the economy in the short run.

In considering the importance of telecom to the U.S. economy, it's important to note that since TA96 was passed, over a third of net telecom investment has been done by the *CLECs* -- the competing local exchange carriers – even though they are only one fifteenth as large as the BOCs when measured in terms of revenues.[3] TA96 permits the CLECs to gain access to the local loop, but generally they've been able to do so only at very major cost. Due to the high cost, the CLECs have concentrated and continue to concentrate most of their investment in high telecom-usage areas.

While the CLEC investments have been focused primarily on urban areas and densely populated states, that investment has been massive. Eviscerating TA96, either through new legislation or by FCC decree, will seriously undermine prospects for further CLEC investment and overall economic growth. On the other hand, maintaining the status quo provides no guarantee that the recent telecom investment boom will extend into the future. Indeed, the BOCs' success in stifling competition in the vast majority of telecom markets bodes poorly for much further CLEC expansion.

The beauty of ELA is that we don't need to hold telecom investment and innovation hostage to a monopoly whose main concern is not developing new products, but protecting its turf. Nor do we need the government to pick our technology winners. A free and open market can do that just fine based on the services firms offer and the prices they charge.

Achieving a Free Telecommunications Market

The local loop is the central pipeline through which Americans access the outside world. Any company that controls that pipeline is in a position to block its use. The BOCs have such control and have succeeded, despite TA96, in restricting its use. The consequence is that Americans, rich and poor alike, continue to pay excessively high fees for local phone and Internet service, both dial-up and broadband (high-speed DSL connectivity).

An analogy may help. Suppose Mario's -- your local pizza delivery service --were given control of the use of your street. What's the first thing Mario's would do? Keep other pizza companies from using the street.[4] What's the second thing Mario's would do? Raise the price they charge

[2] See Jorgenson, Dale, "Information Technology and the U.S. Economy," *American Economic Review*, vol. 91, no. 1 (March 2001), 1-32. The Commerce Department's estimate of the contribution of information technology to economic growth is smaller.

[3] Hall, Robert E. and William H. Lehr, "Rescuing Competition to Simulate Telecom Growth," mimeo, September 28, 2001. Revenues refers here to receipts earned from operations in the local telecom market.

[4] Or, if it couldn't completely refuse access to the street, charge competitive users a very high toll for their passage.

you for pizza. And what's the third thing they'd do? Figure out the other goods (like Chinese food) you are ordering in, keep the suppliers of those goods off your street, and start selling you those products at a much higher price.

In the case of telecom, the local loop is the street, and local telephone service and Internet access are the pizza and Chinese food you can have delivered. The fact that Mario's currently uses the street to deliver its pizza doesn't mean they should be allow to restrict its use or charge a monopoly toll. From this perspective, the BOCs should be prevented from restricting economic access to the local loop, and instead use this loop only on the same terms as everyone else.

The key then, to considering telecom reform, is recognizing two things. First, providing and maintaining the local loop pipeline is a different business from transmitting voice and data through it. Second, the pipeline business appears to be largely a *natural monopoly*, whereas the transmission business is not. Natural monopolies occur when it makes sense, from a cost perspective, to have a single seller. One glance at the telephone poles running down most streets indicates why almost every neighborhood and business district has a single pipeline provider. Erecting new poles, stringing new wires, burying miles of underground cable, and reproducing all the other elements of the local loop is incredibly costly, economically superfluous, and an invitation to go bankrupt, if all this were required just to get a start as a competitor in the local market.

The electricity market provides a useful point of reference here. California's recent experience aside, many states have successfully deregulated the generation of electricity, but not its local distribution. This is because many power plants can competitively supply a state, but the distribution wires running down city streets are a natural monopoly. Another example is the airline industry in which airlines rent slots, but aren't permitted to own and, thereby, restrict entry to airports.

There are two ways to ensure that local-loop pipeline providers don't restrict pipeline transmissions. One method is separating the two businesses by forming pipeline companies that are responsible for upgrading and maintaining the pipeline, but are prohibited from engaging in pipeline transmissions.[5] Such *structural separation* was the hallmark of the decree that broke up the original Bell System monopoly and introduced competition in the long distance market.[6]

Pipeline owners who are barred from transmitting through the pipeline would have no reason to discriminate between different transmission companies and could be expected to provide all such companies access on identical terms. Of course, the pipeline company would have a monopoly on the use of the pipe, so the pricing for use of the pipeline would still need to be regulated on an ongoing basis.

---

[5] Pipeline transmissions in this case are the flows of binary digits that represent our everyday voice and data communications.

[6] The *Modification of Final Judgment* – the court ruling that broke up the original Bell System -- structurally separated ownership and control of the Bell System's local networks (the BOCs) from its long distance network (AT&T).

ELA is the second method for ensuring equal economic access to the local loop pipeline and, thereby, stimulating vigorous telecom competition and large-scale telecom investment. With ELA technology, switching a customer from one local voice and data transmission company to another would be done electronically or logically at dramatically lower costs than occurs under the current system. Similar "equal access" architecture was the key to promoting vigorous competition in the long distance telephone market, which delivered spectacular reductions in Americans' long-distance telephone charges, and equally spectacular technology innovations in the long distance networks. Unlike structural separation, ELA would require no break up of the BOCs. Nor would ELA require modifying TA96. On the contrary, ELA provides a means of making TA96 work as originally intended. Before describing ELA, it's worth briefly describing TA96, the real problem with broadband penetration, current policy initiatives, and the risk that current policy initiatives would lead to greater regulation of telecommunications.

The Telecommunications Act of 1996

When the Bell System was broken up in 1984, control of the local loop – the bottleneck through which local telephone and data communications services could pass -- was assigned to the BOCs. This assignment was exclusive; the divestiture made no provision for competition of local voice and data services. A dozen years later TA96 deregulated the local telecom market by a) eliminating the BOCs' legal status as monopoly franchises and b) requiring that the BOCs rent access to the local loop to incipient, would-be competitors. The act further required the BOCs to rent access to the local loop on a component-by-component or *unbundled* basis according to the needs of their competitors.[7] Finally, rents were to be set at a compensatory price that included a fair profit.

The BOCs were told that if they cooperated with competitors, they could enter the long-distance market. The BOCs then claimed that they would play nice, and demanded immediately their reward. But they actually used a variety of mechanisms to restrict access to the local loop.[8] As a consequence, new carriers have captured less than 5 percent of the local residential and small business telecommunications market. While close to 500 telecommunications firms entered the local market after TA96 was passed and collectively invested over $50 billion, many have closed their doors. Today a resilient and restructured handful of competitors report earning positive profits.[9]

There have been a few exceptions to this rule. In New York, regulators succeeded in forcing Verizon -- the local BOC -- to play closer to the rules. The pricing of network elements, the unbundling of the elements, the handoff of customer lines, and the sharing of facilities have

[7] Because local loop assets were acquired by the BOCs under concessionary conditions and paid for by the public over decades in the form of very high, regulated telephone rates for local and long distance telephone calls, even these "compensatory" rents may be too high.

[8] The list includes charging exorbitant prices for unbundling their components (*elements*), delaying the transfer (*handoff*) of loops from their own switches to those of competitors, using painfully slow and error-prone *manual* rather than electronic handoffs, charging high prices to CLECs for renting space in BOC local service offices to collect these loops, and simply opting to pay fines rather than obey the law.

[9] Hall, Robert E. and William H. Lehr, "Rescuing Competition to Simulate Telecom Growth," mimeo, September 28, 2001.

worked reasonably smoothly. This fact, plus the high demand for telecommunications services in New York, has led to vigorous competition. Interestingly, once Verizon understood that it could no longer thwart competition, it started to focus on making money by renting loops, switches, and other facilities to its competitors.

The success of TA96 in New York shows that the law will work when enforced and when the costs of making it work are low compared to the payoff. Since next generation ELA technology can dramatically lower the costs of unbundling the local loop, TA96 is poised to replicate New York's success in promoting competition around the country.

The Real Problem with Broadband Penetration

Much of the impetus for reversing TA96 emanates from a concern that high-speed Internet access is being deployed and adopted too slowly. The dominant providers of broadband are the BOCs, who are providing *Digital Subscriber Line* (DSL) connections, and *Cable* (the cable television companies), who are providing cable modem hookups. Two thirds of American households have access to cable, and an ever larger share of their cable companies are offering Internet connectivity along with television transmission.

At the current time, roughly 70 percent of households can purchase DSL-based or cable modem broadband service. In addition, somewhat slower transmission satellite hookups are available to all households. The fact that fewer than 10 percent of households are purchasing broadband, when 70 percent are free to do so shows that the current low level of broadband use is not a problem of availability, but rather one of its desirability and price. While continued development of valuable broadband applications should make broadband more desirable, getting a reasonable price for this service is a different story.[10] Broadband hookups are priced high, both because the BOCs have blocked competitive access to the local loop and because of the spaghetti-wire complexity and antiquated manual processes that the BOCs currently use to engineer and maintain their loop networks. Together, these impediments have ensured much less broadband competition than TA96 envisioned.

Current Policy Initiatives

The BOCs see things differently. They argue that TA96 reduces their incentives to invest and that absent TA96 they would be introducing broadband much more rapidly throughout the country. Their proposed cure is quite simple -- vitiate TA96 either by adopting the Tauzin-Dingell Bill now before Congress or by having the FCC issue rulings that would achieve the same result.

[10] Indeed, while there have been many shakeouts in the industry and sizeable recent price increases, broadband investment is occurring at a rapid rate. At the end of 2001, 10 million households had broadband Internet connections. In four years this figure is projected to reach 30 million. (*PC Magazine*, "Crossing the Broadband Divide," February 12, 2002, p. 94.) The fact that broadband coverage is expanding despite the very high price being charged belies the BOCs' argument that TA96 is impeding broadband deployment and adoption.

The Tauzin-Dingell Bill would exempt from TA96 existing and newly installed fiber and other high-speed data portions of their networks. So too would a proposed FCC ruling that classifies facilities carrying data as information services exempt from TA96 and other regulation. Either policy would effectively allow the BOCs to deny competitors access to any fiber-served line and other facilities for purposes of providing advanced services.

Were the BOCs constructing a brand new pipeline from scratch, it would be one thing. But what is mostly involved here is the BOCs longstanding use of fiber in portions of the loops the BOCs are using to provide voice services.[11] Even if forced to unbundle voice (but not data) transmissions carried on fiber lines, [12] the BOCs can offer a package of services, elements of which are priced in order to drive out their competitors.[13] Hence, these policies would provide the BOCs with near monopoly control of local phone service and, together with Cable, near duopoly control of Internet access.[14]

Proponents of Tauzin-Dingell argue that duopoly in broadband is not a problem because the BOCs and CLECs will still compete with one another. It's surprising and rather shocking that this position has gained so much traction.[15] Competitive markets deliver goods and services at prices that equal the long-run incremental costs of producing them. Monopoly, duopoly, and oligopoly set prices that are much higher than this incremental cost. This is particularly the case for commodities, like local telephone service, that represent basic necessities.[16]

Those promoting duopoly in broadband (and, by implication, monopoly in local voice transmissions) also claim that doing so will deliver broadband service at a faster pace. But the real impediment to greater use of broadband is its low adoption rate, not its supposed limited availability. Adoption rates for high-speed Internet services can't be dictated in Washington. It's up to the public to choose to pay for a hookup. In making that decision, the public considers

---

[11] Note that the BOCs as well as their competitors have been deploying fiber in portions of the local loop for over a decade. Hence, the presence or addition of fiber is nothing fundamentally new and certainly not indicative of an advanced service or the introduction of "new wires" that would require new legislation or changes in existing regulation.

[12] Even if the BOCs are required to provide unbundled facilities for the provision of circuit-switched voice services, it is questionable whether they would be required to do so as advanced technology is used to provide packetized voice services.

[13] For example, the BOCs could offer voice transmission for free or at a very low price to customers who sign up for broadband. In so doing, the BOCs would effectively include the charge for local telephone in their charge for broadband. By making the marginal cost of telephone service essentially free, the BOCs can get everyone who wants broadband to also sign up for their telephone service. Since the CLECs still left in the market won't be able to offer broadband, they won't be able to match the voice transmission price set by the BOCs, they'll be driven out of business. Assuming, as seems highly likely, that the BOCs would, as part of this "deregulation" of telecom be permitted to enter the long distance market, they would also be in a position to drive long-distance carriers out of that market. Their technique here would be to offer long distance service for free or at a very low price to any customer purchasing broadband service. This would eliminate the customer base of the long distance companies, leaving the BOCs with a monopoly over that service as well.

[14] The BOCs could and, presumably would, also use their DSL broadband monopoly to monopolize the Internet Service Provider (ISP) market. They need simply bundle in for free the hosting of websites with their sale of broadband hooks and, voila, the ISPs will be out of business.

[15] "Broadband Policy: Did Somebody Say Oligopoly?" BusinessWeek, March 18, 2002.

[16] Basic necessities refers to products for which demand is highly inelastic -- for local telephone service, this elasticity is on the order of 0.1.

two things – the value of broadband and its price. And while Tauzin-Dingell or an FCC ruling would do nothing to make broadband more desirable, both would enable BOCs to fix prices above competitive levels. Thus, well intentioned proponents of Tauzin-Dingell are likely to get exactly the opposite of what they are hoping for, namely greatly reduced demand for and deployment of high-speed Internet services.[17]

Reregulating Telecom?

The Tauzin-Dingell Bill or an equivalent FCC ruling are not only anti-competitive, they may also roll back the clock with respect to deregulation. The reason is that once competition is completely stifled, the public will realize that being held captive by a BOC/cable duopoly is not what they had bargained for, and they will seek to re-regulate their behavior.

When done right, deregulation has worked extremely well. It has delivered huge savings to the American public and substantial investment in the economy. Deregulation of communications sectors, such as long distance telephone service, of energy sectors, such as gas pipelines or electricity generation, and transportation sectors, such as airline and trucking services, have worked for two reasons. First, market-oriented government officials realized that the products being sold by these industry sectors were not *natural* monopolies. Second, the officials made sure they had the right groundwork in place, namely a free market, before pulling the regulatory plug.

In the case of the local voice and data market, transmissions per se are not a natural monopoly, so the first of these preconditions is satisfied. But the second precondition for successful deregulation – a market in which competitors are free to enter – is far from satisfied. Deregulating local telecom in the current setting would permit the BOCs to shut down many, if not most, of their remaining competitors to the substantial detriment to the public and our economy. In contrast, were ELA adopted and implemented in a manner that treated all transmitters identically, we could significantly lessen the need for regulating local telecom transmissions.

Using ELA to Accelerate Broadband Deployment and Adoption

To appreciate the terrific opportunity offered by ELA, one needs to grasp the tremendous obstacles involved in deploying broadband over the local loop given current BOC network architecture, BOC operations infrastructure, and BOC reluctance to cooperate. As detailed in the Appendix, simply providing a CLEC access to a single telephone line (a loop) running from the client's home or business to the BOC central office entails an elaborate multi-step process, including physically identifying, disconnecting, and reconnecting the client's paired telephone wire. Moreover, in order to be able to receive a new customer's line the CLEC needs to *collocate* equipment and lines in the BOC's central office. This takes time, equipment, and given BOC collocation rental charges, lots of money.

[17] The BOCs will, of course, receive exactly what they seek from Tauzin-Dingell – the opportunity to restrict supply and reap increased monopoly profits in both Internet *and* voice services.

Interestingly, the cumbersome process for handing off loops to CLECs is similar in significant respects to the process that a BOC must go through when it wishes to provide a customer with its own DSL-based service or needs to rearrange its customers' voice services. Thus, an automated process that could set up and cross-connect both voice and data circuits electronically on a converged, rather than wire-pair-by-wire-pair, basis could benefit the BOCs as well as the CLECs. First, it would make the provision of unbundled loops far cheaper and more economical both for the supplying BOC as well as the receiving CLEC. Second, it would provide the BOCs with cost and operational efficiencies in the provision of both their current voice and DSL-based services. And third, it would remove all foreseeable technical barriers to the provision of advanced services to customers.

ELA is such an automated process. As spelled out in the Appendix, ELA locates next generation digital remote terminals in each neighborhood and business district. The equipment in these terminals convert voice and data communications to and from binary ("1"s and "0"s) streams and places them in efficient packages/packets called *ATM* (asynchronous transfer mode) cells, which are analogous to letter envelopes. These data envelopes are densely packed onto a shared fiber wire that connects to an ATM switch. Much like the sorting facilities of the post office, the ATM switch sorts the cells by service-provider network and sends the cells on their way. The set of voice and data packets of a particular customer is called a permanent virtual circuit (PVC), which serves much like a postal address in identifying the sender and recipient of the transmission.

The local BOC network as well as each CLEC network would be directly or indirectly physically connected to the ATM switch, which need not be located in a BOC central office. This would permit the ATM switch to direct the digital packets associated with any particular PVC to the customer-selected local voice or data service provider's network. Changing a customer's service to include data or changing a customer's service provider would simply require sending electronic instructions to the ATM switch. The laborious and error-prone process of identifying a client's paired telephone wires and physically moving them from one provider's switch to another would be a thing of the past.[18] Moreover, with this new architecture CLECs need not establish collocations at every central office – but only at the ATM switch, which would serve a collection of neighborhoods. And the CLECs would require much less collocation equipment and space than is now the case.

In addition to dramatically reducing the costs of and errors in switching providers and making facilities-based competition economically feasible, ELA lowers the BOCs' costs of maintaining their voice and data networks, permits all customers to receive advanced services with no geographic limitation, and effects greater convergence between voice and data traffic. Equally important, ELA makes use of the vast majority of investment that the BOCs and CLECs have made in recent years in fiberizing and otherwise upgrading the local loop. Finally, ELA allows CLECs to offer broadband service and applications without having to collate special equipment at the remote terminals that the BOCs use to provide broadband.

[18] Indeed, SBC in announcing its Project Pronto (which is a far less integrated and automated architecture than ELA) stated that it would pay for itself from just the maintenance cost savings that SBC would now enjoy on its own voice loops.

Implementing ELA in the Short- and Long-Runs

Much of the infrastructure needed to implement ELA is either in place or slated to be installed in the form of fiber lines running from BOC central offices to next generation remote terminals. Using these resources, which will require BOC participation and cooperation, would greatly reduce the cost of implementing ELA. Indeed, all that is needed beyond this infrastructure to make ELA a reality is software and electronics that will bundle voice and data in digital packets at the remote terminal so that it can be routed in the BOC central office to whichever transmission vendor the customer has chosen. In the longer run, the fiber ring described in the Appendix could, in large part, replace the BOC central offices as routing facilities and achieve additional technical improvements and cost savings.

The additional financial resources needed to build ELA could be acquired in a variety of ways. But regardless of how acquired, these costs pale in comparison with the likely savings to households and businesses as well as the stimulus to the economy that ELA would deliver.

Conclusion

The Telecommunications Act of 1996 was adopted for a good reason. The local Bell Operating Companies had a tight grip on local phone service and were poised to form a duopoly with cable companies with respect to the provision of high-speed Internet connectivity. Unfortunately, thanks to inadequate enforcement, BOC recalcitrance, and the inherent limitations of current technology, TA96 has not been fully successful at transforming local voice and data service into the highly competitive market that was envisioned. Indeed, in many ways the market is more concentrated and less competitive now than when the Act was passed.

The fundamental reason for TA96's failure was that it asked the BOCs to both compete with and help their competitors. This was like asking the lion to lie down with the lamb. The BOCs have done what any red-blooded American company would do. They have used their control of the local loop to block competitive exchange carriers from serving the public.

In thwarting TA96, the BOCs have strengthened their near monopoly control of local voice transmission and set the stage for duopoly control (with the local cable companies) of broadband service. Maintaining the status quo is, then, a prescription for continued high prices for both voice and data services as well as for much less long-run investment and innovation and use of these services than would otherwise arise. It also portends heavy-handed regulation as the public reacts to its economic captivity.

Reforming TA96 can take three paths. The first path is to eviscerate the law through adoption of the Tauzin-Dingell bill or by FCC decree. Either means would allow the BOCs to circumvent the requirements of TA96 under the pretext of expanding broadband coverage. The second path is structurally separating the local loop pipeline business from the pipeline transmissions business. The third path is adopting Electronic Loop Access technology by a) encouraging investment in ELA technology and b) enforcing TA96 so that this new technology is made available at a compensatory price to the entire industry. Paths two and three lead to the

information superhighway that the country needs and the public deserves. Path one will lead us back to where we started -- under the thumb of a small cadre of price fixers.

To me, ELA technology, with its relatively low costs and advantages that benefit both CLECs and BOCs, *and their customers*, is the path of choice. ELA can transform the local loop from a bottleneck that restricts competition into a basin that attracts it. We need that competition and lots of it if the nation's telecommunications industry is to continue to play its vital role in generating new investment, creating jobs, and propelling economic growth.

Appendix

Comparing Current Carrier Service Area and ELA Architectures

Current Carrier Service Architecture

The first figure shown below, entitled Carrier Serving Area Architecture, provides a simplified picture of the current configuration of local loop/switching infrastructure. The figure shows copper and fiber feeder cables running from residential neighborhoods or businesses (local distribution areas), designated as CSA 0, CSA 1, and CSA 2, to two local service offices (identified by squares). Inside each local service office there area BOC switches, marked by an X, cable collection boxes labeled Frame, and CLEC collocation cages in spaces rented out from the BOC. Each CLEC (A and B) have cages in each local service office. Once the voice or data (Internet) transmission is routed to the BOC or the CLEC at the local service office, it is either transmitted to another local service office or shipped to the broader BOC or CLEC networks.

The first figure also shows three local distribution area carrier systems, labeled UDLC, IDLC, and SAI. The SAI system connects to the local area office via copper. If its location is more than three miles from the local office, broadband DSL-based service is not feasible. DSL-based service is also infeasible in the case of the IDLC carrier system because its DLC is outmoded and unable to support high-speed data transmission.

Transferring a Single Loop

Unbundling and handing off a loop from a BOC to a CLEC is an elaborate process. First, it requires the BOC switch to be instructed that this customer's service is to be disconnected. Second, it requires that the cross-connect cables linking this loop from the central office's main distributing frame to the BOC's local switch be disconnected. Third, new cross-connect (jumper) cables must be attached to the loop wires and snaked into a collocation cage that the CLEC has established elsewhere in the BOC central office to collect these unbundled loops. Fourth, the collected loops must be multiplexed onto a high capacity carrier system and transported out of the BOC central office and over to the central office of the CLEC. There they have to be cross-connected though the CLEC office's distributing frame and into the CLEC local switch. Fifth, the CLEC local switch must be instructed to recognize that it is now providing service on this loop. And finally, number portability databases in the BOC's network have to be updated to recognize that traffic destined for this customer should be routed to the CLEC switch and not the BOC switch.

Clearly, these procedures, called a *hot cut*, for transferring a local loop from a BOC to a CLEC are complex. They take time, planning, skill, and care even when performed by an eager vendor, which the BOCs are certainly not. Furthermore, BOC records concerning pair assignments on the main distribution frame are often inaccurate, and technicians frequently make mistakes in selecting which pair to disconnect or jumper. Hence, this process frequently fails – putting customers out of service until the problem is identified and corrected.

Collocation Costs

As indicated above, another major disadvantage of hot cuts is the need for CLECs to set up shop (*collocate*) in each of the BOCs' local serving offices where it wishes to accept unbundled loops. There are over 9,000 BOC local serving offices spread across the company. Hence, for a CLEC to compete in all parts of the country it needs to rent collocation space, move in equipment, and hook up that equipment in roughly that number of offices. Unless the local service area is marked by high customer density or greater than average telecom traffic, the fixed costs that a CLEC must pay to accept unbundled loops will generally exceed expected revenues. Indeed, the BOCs charge between $50,000 to $100,000 just for preparing a collocation space. So a CLEC competing on a nationwide basis faces a half billion to a billion dollar bill for this "service" alone!

ELA Architecture

ELA (Electronic Loop Access) architecture represents a new technology that can overcome the physical roadblocks inherent in Carrier Serving Area architecture and the man-made economic roadblocks arising from BOC behavior. With the installation of NGDLCs (next generation digital loop carriers) it can also permit DSL connections to remote local distribution areas that are now connected by cooper wire to local service offices as well as to all local distribution areas that have outmoded DLCs, which can carry only voice transmissions. Hence, ELA meets one of the government's key telecommunication goals, namely providing broadband Internet connections to neighborhoods and businesses that would not otherwise enjoy them. It is quite likely that ELA-like architecture will become the industry standard as local phone companies invest to increase their bandwidth capabilities.

The second figure provides a highly stylized representation of one possible configuration of ELA architecture. The first point to note is that rather than having either fiber or cooper feeder cables run from the local distribution area digital loop carrier (labeled UDLC and IDLC) to the BOC's switch or cable collection box, there is a new fiber ring that connects all the DLCs. As discussed in the main body of the paper, ELA can be introduced in the short run without a fiber ring since it is the ATM switch and remote terminal electronics that form the PVCs and permit the electronic switching of customers. I include the fiber ring here to illustrate the ELA system that would ideally be installed were short-run financing not a problem.

The fiber ring connects to new ATM (asynchronous transfer mode) digital packet switches in each BOC local service office, which are capable of receiving and transmitting voice as well as data (Internet).[19] The ATM switches are, in turn, connected to BOC and CLEC switches. Thus, ELA eliminates the cable cross-connection frames in the current architecture. Once the voice and data packets are received by the BOC and CLEC switches, they are retransmitted to BOC/ILEC (incumbent local exchange carrier) and CLEC networks for further transmission to end recipients.

[19] In the short run ELA could be constructed without a fiber ring in which case the NGDLCs would not be connected one to another. The advantage of those additional ring connections is primary security in that transmissions run in both directions, so that if the ring is cut in one place, service is not interrupted.

The second point to note is that CLEC A and CLEC B need have collocation cages in only one local service office. The reason is that being connected via the ATM switch to the fiber ring anywhere suffices to connect the CLEC to all DLCs. This is a large economy relative to the current architecture and dramatically lowers the fixed costs incurred by CLECs in entering the market.

The third point, not apparent from the figures, is that the handoffs of customers from BOCs to CLECs and CLECs to BOCs can be handled electronically, done instantaneous, and accomplished at close to zero cost. The reason is that the fiber ring provides a permanent virtual circuit for each household or business local loop that includes voice and data transmissions. These circuits can be readily transferred between exchange carriers.

The fourth point is that UDLC, the IDLC, and the SAI local carrier systems are, under ELA, all upgraded to NDLCs (next generation DLCs) that are capable of carrying both voice and data packets and, therefore, provide broadband service to all three local distribution areas.

To summarize, the ELA fiber architecture makes it seamless and easy for new entrants in the voice market to compete in the local telephone market.

Carrier Serving Area (CSA) Architecture (Bellcore/Telcordia standard since 1980)

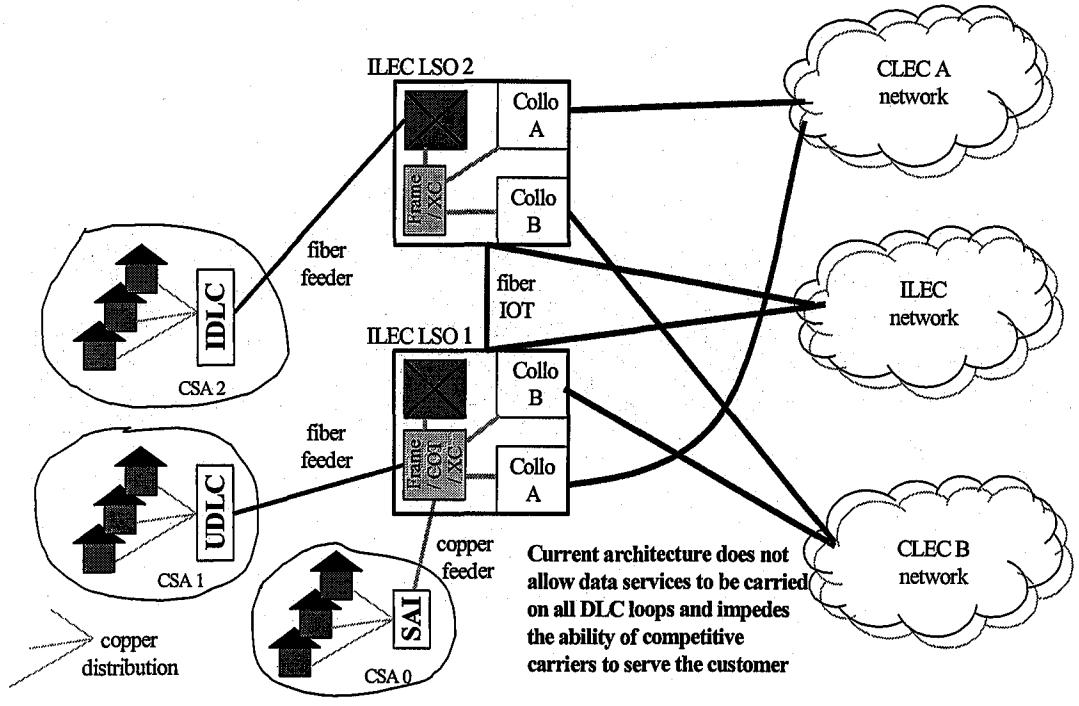

3.7.2002

1

ELEA Architecture
(True advanced network)

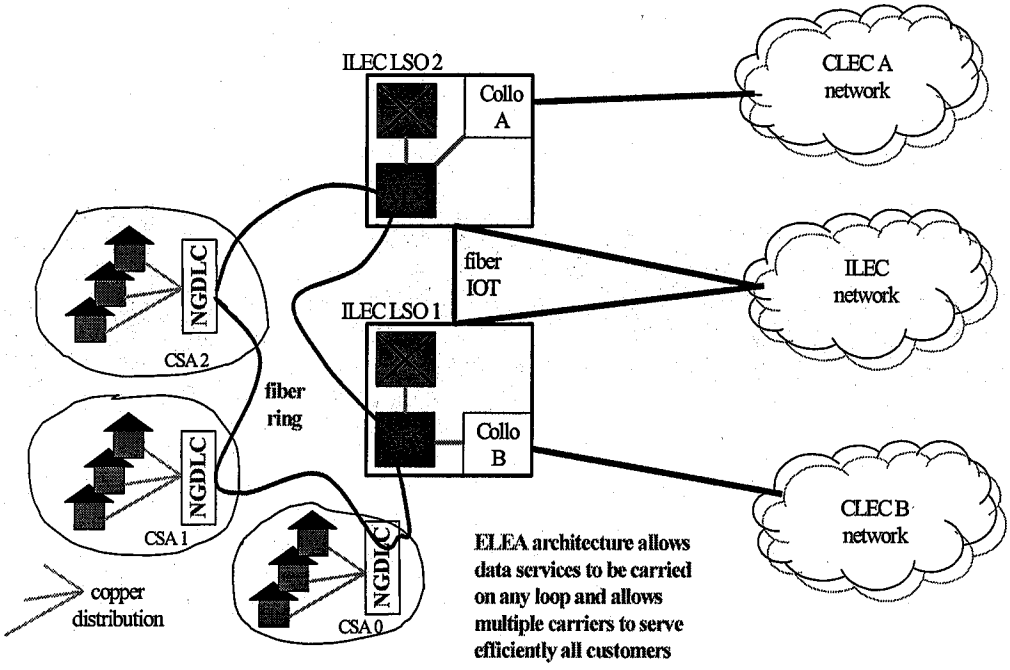

3.7.2002 1