BELLSOUTH

BellSouth
Suite 900
1133-21st Street, N.W.
Washington, D.C. 20036-3351

whit.jordan@bellsouth.com

W. W. (Whit) Jordan
Vice President-Federal Regulatory

202 463-4114
Fax 202 463-4198

June 14, 2002

Ex Parte

Ms Marlene H. Dortch
Secretary
Federal Communications Commission
445 12th Street, SW
Washington, DC 20554

Re: CC Docket No. 01-92, Intercarrier Compensation

Dear Ms Dortch:

On June 10, 2002, Beth Shiroishi, Ed Honeycutt, Don Barbour, and the undersigned, all from BellSouth, and Jeff Rohlfs and Chip Shooshan, both consultants for BellSouth from Strategic Policy Research, met with Tamara Preiss, Jay Atkinson, Chris Barnekov, Margaret Dailey, Steve Morris, and Victoria Schlesinger from the Pricing Policy Division of the Wireline Competition Bureau, Rob Tanner from the Competition Policy Division of the Wireline Competition Bureau, Don Stockdale from the Office of Plans and Policy, and Stacy Jordan, Gregory Vidas, Joseph Levine and Monica DeLong from the Policy Division of the Wireless Telecommunications Bureau. The purpose of the meeting was to discuss BellSouth's proposal for intercarrier compensation in connection with the above referenced proceeding.

During this meeting, BellSouth explained its proposal for a bill and keep regime. Under the BellSouth proposal, interconnection would occur at the ILEC tandem office when parties cannot reach a mutual agreement as to the point of interconnection. Each carrier would be responsible for providing transport on its side of the point of interconnection. For traffic that has at least a full DS1 level of traffic, the default arrangement would require direct end- office trunking to an end office. In the case of ILEC to ILEC interconnection, interconnection would occur through a meet point at the service area boundary.

Also during this meeting, Jeff Rohlfs and Chip Shooshan discussed a paper they had prepared which described an economically efficient intercarrier compensation arrangement. This arrangement was then compared with other proposals including the

BellSouth proposal. The authors concluded that the BellSouth proposal is the most effective in terms of reducing the costs of regulation and would be more favorable to competitors than the economically efficient arrangement.

The handouts used in this meeting are attached. I am filing two copies of this notice in the docket identified above, as required by Section 1.1206(b)(2) of the Commission's rules, and request that you associate this notice with the record of that proceeding.

Please call me if you have any questions.

Sincerely,

W. W. Jordan

Attachments

cc: Tamara Preiss (WCB-PPD)
Chris Barnekov (WCB-PPD)
Steve Morris (WCB-PPD)
Rob Tanner (WCB-CPD)
Stacy Jordan (WTB-PD)
Joseph Levine (WTB-PD)
Jay Atkinson (WCB-PPD)
Margaret Dailey (WCB-PPD)
Victoria Schlesinger (WCB-PPD)
Don Stockdale (OPP)
Gregory Vidas (WTB-PD)
Monica DeLong (WTB-PD)

BellSouth Bill-and-Keep at the Tandem Office
Proposed Default

The following default applies to the facility based interconnection of Incumbent Local Exchange Carriers (ILECs), Competitive LECs (CLECs), Commercial Mobile Radio Service (CMRS) providers (including paging providers) and Interexchange Carriers (IXCs) when two carriers are unable to reach a mutually acceptable, negotiated arrangement for interconnection. Further, the following default describes the conditions under which intercarrier compensation is bill-and-keep between those interconnecting carriers.

1. **For non-transit traffic, each carrier recovers the costs of its network from its own subscribers.**

   * Similar to the COBAK proposal, each carrier recovers the cost of its network elements used in a call from the end user.
   * Such arrangement will require end user rate structure changes.

2. **POI: The default Point of Interconnection (POI) is the ILEC's Tandem Office serving the End Office of the Called Party.**

   * Each carrier is responsible for providing transport facilities on its side of the point of interconnection, regardless of the direction of the call. A carrier could fulfill such obligation by providing its own facilities, purchasing from a third party, or purchasing from the interconnecting party.
   * Point of Interconnection is the physical point at which the two parties' networks meet for the interchange of traffic.
   * Points of Interconnection can be established through physical collocation, virtual collocation, or mid-span meets.

Local Call[1]

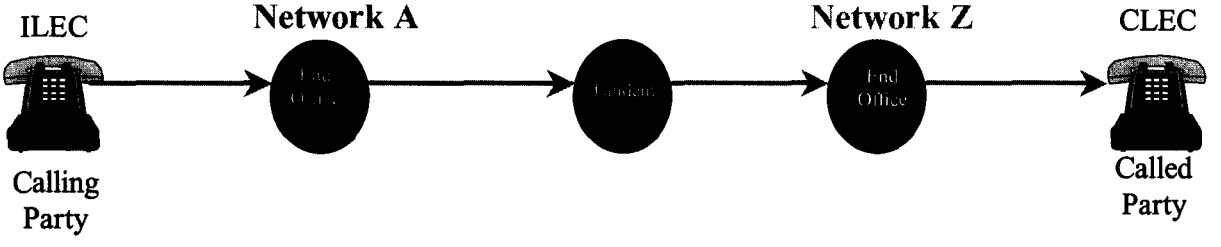

In this example, the calling party has a retail relationship with Network A for network access that includes transport of local calls. Network A is responsible for the transport of local calls between the end office of the calling party to the tandem office. Network Z is responsible for the transport of the call from Network A's tandem office to reach the end office of the called party. Network A recovers its loop, originating end office switching, and transport costs to the tandem office through its retail relationship with the calling party. Network Z recovers its transport costs from Network A's tandem office, its terminating end office switching, and its loop costs from its end user through its retail relationship with the called party for network access.

Long Distance Call[1]

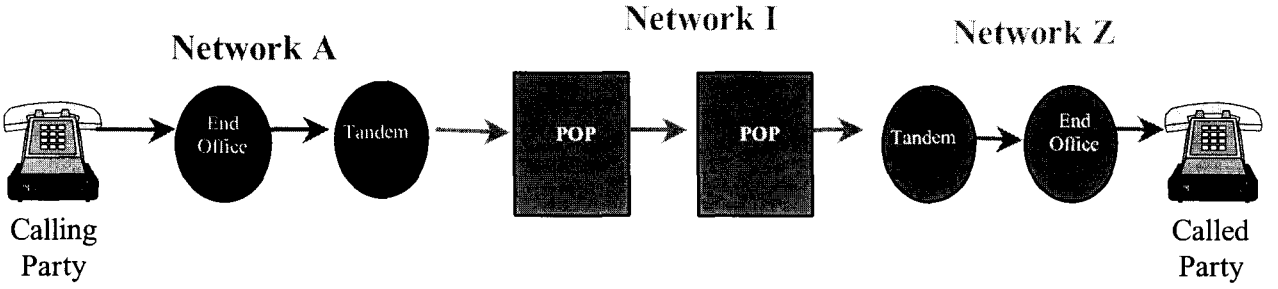

In this example, the calling party has a retail relationship with Network A for network access that includes transport of local calls and with Network I for the transport of long distance calls. Network I is responsible for transporting long distance calls between the tandem office of the calling party and the tandem office of the called party. Network A recovers its loop, originating end office switching, and its transport costs to reach the tandem office from the calling party through its retail relationship for network access. Network I recovers its transport costs from Network A's tandem office, its interexchange switching costs, and its transport costs to reach the tandem office of the called party through its retail relationship with the calling party. Network Z recovers its tandem switching, transport, terminating end office switching and its loop costs from its end user through its retail relationship for network access.

Wireline to Wireless Call[1]

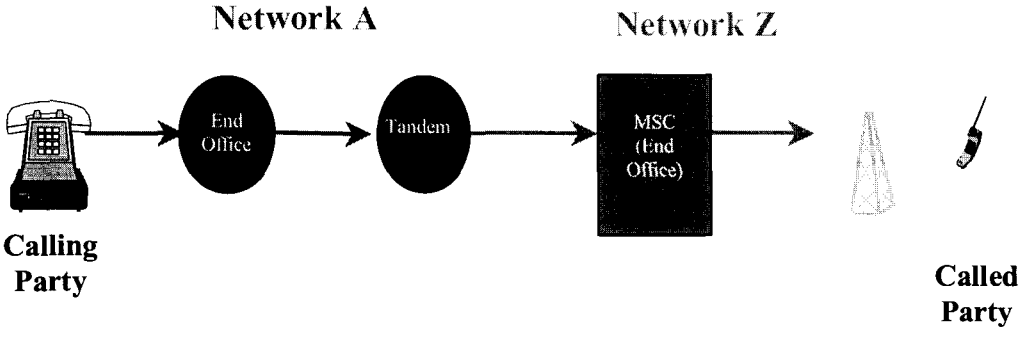

In this example, the calling party has a retail relationship with Network A for network access that includes transport of local calls. Network A is responsible for the transport of local calls between the end office of the calling party and the tandem office. Network Z is responsible for the transport of the call from Network A's tandem office to reach the Mobile Switching Center (end office) of the called party. Network A recovers its loop, originating end office switching, and transport to reach the tandem office through its retail relationship with the calling party. Network Z recovers its transport costs from Network A's tandem office to the MSC, its loop equivalent facilities (cell sites and cell site transport), and its terminating MSC (end office) switching from its end user through its retail relationship with the called party for network access.

[1] Transport obligations would be the same regardless of the directionality of traffic.

Summary of Transport Obligations under Default Scenario

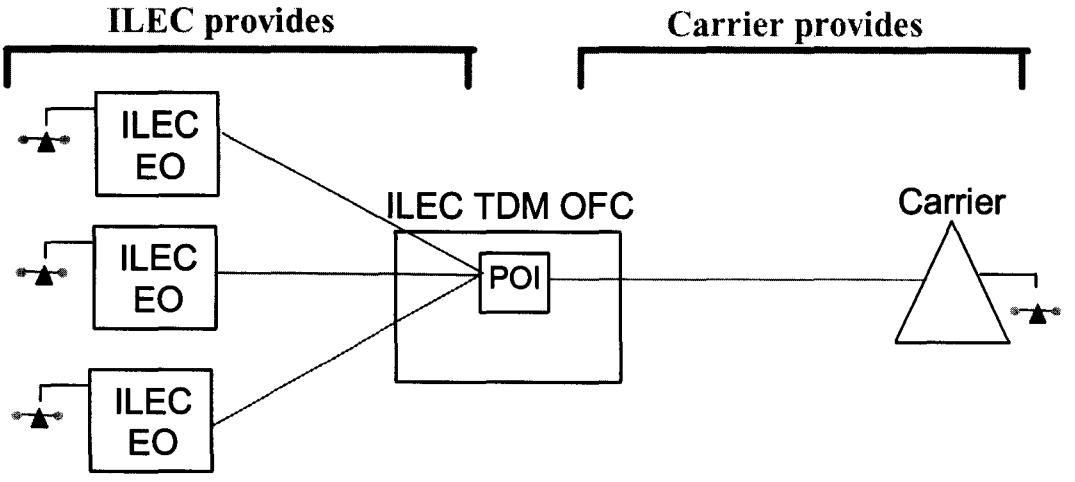

3. **Trunking: In the absence of mutual agreement, the default arrangement for trunking will require direct end-office trunking 1) when the traffic exchanged at that end office exceeds a DS-1 level of traffic, or 2) under a tandem exhaust situation.**

   * Each carrier is still responsible for providing transport facilities on its side of the point of interconnection, or ILEC tandem office. However, the trunking would be direct end-office routed for efficiency.
   * Overflow traffic can traverse the tandem switch if volumes are less than a DS-1 level.

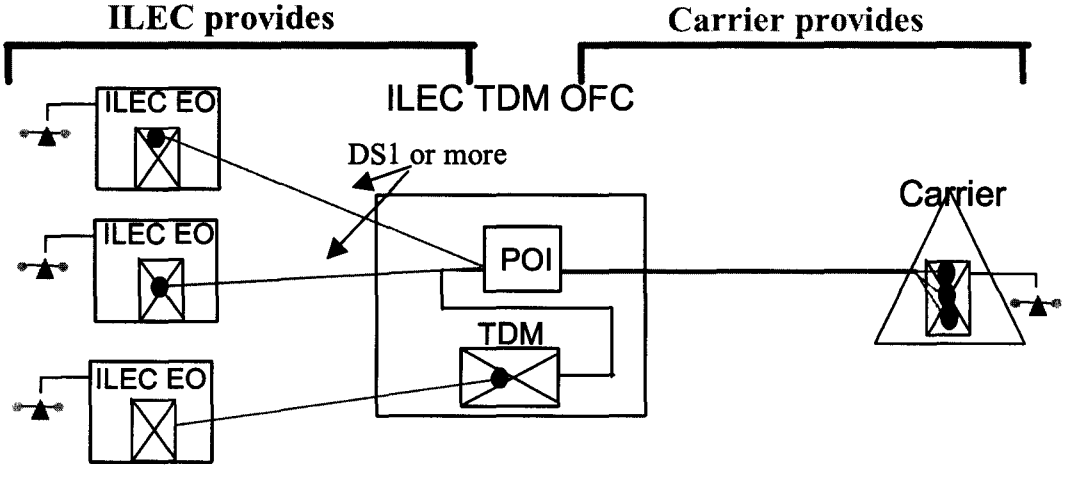

4. **ILEC to ILEC Interconnection: Interconnection takes place through a meet point at the service boundary.**

   * Each carrier is responsible for providing transport facilities on its side of the point of interconnection or meet point.

5. **Bill-and-Keep Limitations: Bill-and-Keep Applies for interconnection where the network defaults are in place. Services that are over and above the network default are not subject to bill-and-keep.**

   * Each carrier has an obligation to interconnect with any requesting carrier (Section 251(a)(1) of the Act). As such, transit traffic service is a value added service that is not required by the Act, and is not subject to bill-and-keep.
   * If a carrier chooses to purchase transport or switching from another carrier to meet its obligations under the default rules, such transport and switching are not subject to bill-and-keep.
   * Value-Added Services over and above 251 interconnection obligations would not be subject to bill-and-keep.

Intercarrier Compensation to Promote Efficiency of the Local Telecommunications Sector

John Haring, Jeffrey H. Rohlfs, Harry M. Shooshan & Joseph H. Weber

Presentation to the Federal Communications Commission

June 10, 2002

STRATEGIC POLICY RESEARCH

Intercarrier compensation to optimize economic efficiency

- What is the most economically efficient compensation arrangement?
- How efficient are various alternative regimes?
  - ✓ Existing regime
  - ✓ DeGraba proposal
  - ✓ Atkinson-Barnekov proposal
  - ✓ BellSouth plan
- How much will various proposals reduce costs of regulation?

STRATEGIC POLICY RESEARCH

Aspects of economic efficiency

- Incentives for competitive entry and/or expansion wherever (but only where) the entry and/or expansion would improve the overall efficiency of the sector
  - ✓ Efficient choice of LECs
- Incentives for entrants to construct networks that maximally improve economic efficiency
- Not involve excessive regulation

STRATEGIC POLICY RESEARCH

Basic principles for efficient compensation

- ILEC to CLEC compensation for call termination should be costs that the ILEC avoids by delivering the call to the CLEC rather than to the end user
- CLEC to ILEC compensation for call termination should be the costs that the ILEC incurs by so doing
  - ✓ The CLEC can handle the call profitably if and only if its doing so lowers the total cost of handling the call (by ILEC and CLEC, considered together).
  - ✓ CLEC might operate profitably even if its call-handling costs are higher (lower access costs, better quality).
  - ✓ Any higher compensation requires the ILEC and its customers to subsidize the CLECs. Any lower compensation could inhibit efficient competition.
  - ✓ No incentive for end user to declare himself/herself/itself to be a carrier.

STRATEGIC POLICY RESEARCH

Appropriate cost standard is ILEC's costs

- No presumption that ILEC network is optimal
- ILEC costs are those that obtain if CLECs do *not* enter
- Standard that CLECs must beat if their entry is to improve overall economic efficiency
- Appropriate standard cannot depend on CLEC's costs
  - May not be efficient

STRATEGIC POLICY RESEARCH

Comparisons among plans: Cost of regulation

- Existing regime requires regulation of all cost elements
- BellSouth plan obviates regulation of prices, except possibly joining link
- DeGraba plan requires regulation of prices of tandem switching and transport
- Atkinson-Barnakov proposal needs greater specificity:
  - One variant similar to BellSouth plan except that cost of joining link is split 50-50

STRATEGIC POLICY RESEARCH

Network Configuration of ILEC

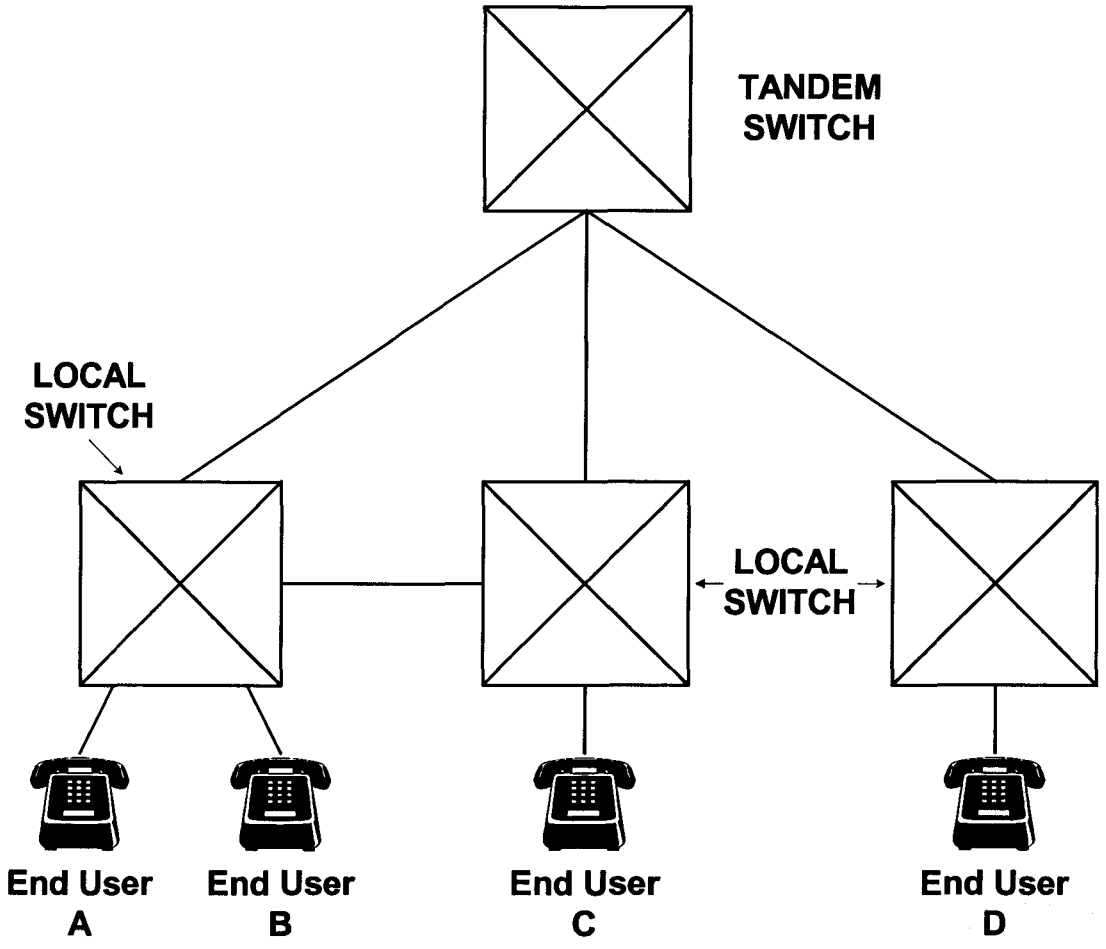

STRATEGIC
POLICY
RESEARCH

Network Configuration of ILEC and CLEC

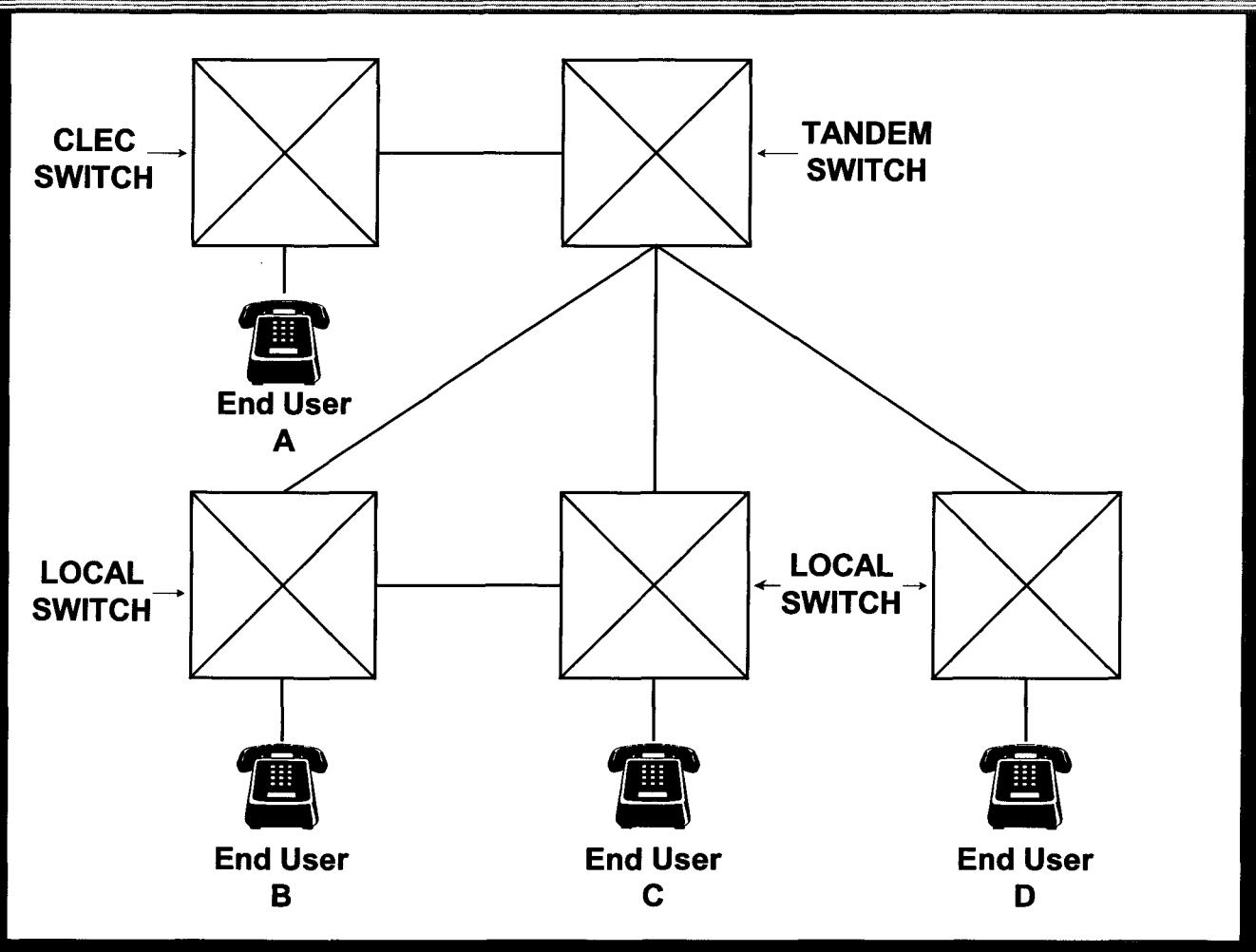

STRATEGIC POLICY RESEARCH

Intercarrier Compensation under Various Regimes in Florida (Cents per Minute)

Call Direction	CLEC-ILEC	ILEC-CLEC
Intercarrier Compensation	CLEC to ILEC	ILEC to CLEC
Subsidy-Free Regime	0.477750	0.116002
Existing Regime	0.477750	0.375100
DeGraba Proposal	0.181950	0.079300
Atkinson-Barnakov Proposal	(0.039650)	0.039650
BellSouth proposal	0.000000	0.000000
Subsidies (ILEC to CLEC)		
Existing Regime	0.0000	0.2591
DeGraba Proposal	0.2958	(0.0367)
Atkinson-Barnakov Proposal	0.5174	(0.0764)
BellSouth Proposal	0.4778	(0.1160)

STRATEGIC POLICY RESEARCH

Intercarrier Compensation under Various Regimes in Mississippi (Cents per Minute)

Call Direction	CLEC-ILEC	ILEC-CLEC
Intercarrier Compensation	CLEC to ILEC	ILEC to CLEC
Subsidy-Free Regime	0.477750	(0.046103)
Existing Regime	0.477750	0.375100
DeGraba Proposal	0.181950	0.079300
Atkinson-Barnakov Proposal	(0.039650)	0.039650
BellSouth proposal	0.000000	0.000000
Subsidies (ILEC to CLEC)		
Existing Regime	0.0000	0.4212
DeGraba Proposal	0.2958	0.1254
Atkinson-Barnakov Proposal	0.5174	0.0858
BellSouth Proposal	0.4778	0.0461

STRATEGIC POLICY RESEARCH

Comparisons among plans: Rates and Subsidies

- Efficient subsidy-free rate for CLEC to ILEC compensation is *considerably* higher than for ILEC to CLEC compensation
- Under the existing regime, CLEC-to-ILEC compensation is efficient and subsidy-free, but ILEC-to-CLEC compensation involves large subsidies from ILEC-to-CLEC
- The BellSouth plan is more favorable to competitors than the efficient subsidy-free plan

Comparisons among plans: Rates and Subsidies

- The DeGraba proposal reduces the existing subsidies in ILEC-to-CLEC compensation but it introduces new subsidies in CLEC-to-ILEC compensation
- Particular variant of the Atkinson-Barnakov proposal: similar to the BellSouth plan, but ILEC-to-CLEC subsidies slightly larger

Basic principles for a rational rate structure

- Unified intercarrier compensation regime across all jurisdictions should apply for the function of connecting a LEC customer to another carrier
- Not vary, depending on whether the call is local, interstate or intrastate
- Avoid encouraging unproductive arbitrage among the different rates for intercarrier compensation
- Explicit part of BellSouth Plan

STRATEGIC POLICY RESEARCH

INTERCARRIER COMPENSATION TO PROMOTE EFFICIENCY OF THE LOCAL TELECOMMUNICATIONS SECTOR

John Haring, Jeffrey Rohlfs,
Harry M. Shooshan and Joseph Weber[1]

June 3, 2002

[1] The authors are principals in Strategic Policy Research, Inc., an economics consultancy specializing in communications policy issues. Dr. Haring formerly served as Chief Economist of the Federal Communications Commission and Chief of the Commission's Office of Plans & Policy. Dr. Rohlfs was formerly head of economic modeling research at Bell Laboratories. Mr. Shooshan formerly served as Chief Counsel of what is now the Subcommittee on Telecommunications and the Internet of the U.S. House of Representatives. Mr. Weber is a telecommunications engineer with over 30 years of experience at Bell Labs, at AT&T and as a consultant.

7979 OLD GEORGETOWN ROAD 7TH FLOOR BETHESDA, MARYLAND USA 20814-2429
+1.301.718.0111 FAX – +1.301.215.4033 EMAIL – spri-info@spri.com
WEBSITE: www.spri.com

Table of Contents

EXECUTIVE SUMMARY ..... **I**

1. INTRODUCTION **1**

2. PROBLEMS WITH THE EXISTING INTERCARRIER COMPENSATION REGIME **2**

2.1. PERVERSE INCENTIVES/PERVERSE RESULTS 3
2.2. REGULATORY FAILURES 4

3. A SUBSIDY-FREE REGIME FOR LOCAL INTERCARRIER COMPENSATION **6**

3.1. CHOICE OF EFFICIENT LECS 6
3.1.1. Both End-Users Are ILEC Customers *6*
3.1.2. The Called Party Is a CLEC Customer *8*
3.1.3. The Caller Is a CLEC Customer *10*
3.2. LINE-SIDE INTERCONNECTION 11
3.3. THE DUBIOUS BENEFITS OF INEFFICIENT COMPETITION 12
3.4. COST ESTIMATION ISSUES 13
3.5. COSTS OF REGULATION 13
3.6. CALLER PAYS VS. CALLING PARTY PAYS 13

4. ALTERNATIVE PROPOSALS FOR LOCAL INTERCARRIER COMPENSATION **14**

4.1. DEGRABA PROPOSAL 15
4.2. BELLSOUTH PROPOSAL 15
4.3. ATKINSON-BARNAKOV PROPOSAL 16

5. SUBSIDIES UNDER ALTERNATIVE PROPOSALS FOR INTERCARRIER COMPENSATION **17**

5.1. QUANTITATIVE COMPARISON 18
5.2. INCENTIVES OF END USERS TO DECLARE THEMSELVES TO BE CARRIERS... 22

6. RATIONALIZING THE REGULATED RATE STRUCTURE **23**

6.1. ARBITRAGE OPPORTUNITIES 24
6.2. A RATIONALIZED RATE STRUCTURE 25
6.3. APPROPRIATE COST RECOVERY 26

7. CONCLUSIONS **27**

APPENDIX **29**

EXECUTIVE SUMMARY

In this paper, we address three basic questions regarding intercarrier compensation:

- What is the most economically efficient compensation arrangement?
- How closely do the existing regime and various other proposals come to the optimal scheme? and
- How likely are various proposals to reduce the increasingly onerous costs of regulation of interconnection?

For optimal economic efficiency, intercarrier compensation should be designed to afford competing local exchange carriers ("CLECs") the incentive to enter and expand wherever (but only where) their entry and/or expansion improves the efficiency of the entire local telecommunications sector—considering both the incumbent local exchange carrier ("ILEC") and CLECs together.

We first describe a subsidy-free intercarrier compensation proposal that is, from an economic standpoint, the most efficient plan—apart from the (transactions) costs of regulation. The efficient and subsidy-free level of intercarrier compensation depends entirely on the ILEC's costs. Those costs define the standard that any competitor must beat (either through lower cost or higher quality) if its operations are to improve economic efficiency. This approach is *not* based on any presumption that incumbent local calling areas and network designs are efficient. Rather, it is based on the irrefutable fact that if CLECs do not enter, the ILEC's costs will be the costs of the total local telecommunications sector. The goal is to ensure that if CLECs do profitably enter, the total sector costs, adjusted for quality, will not increase.

The alternative approach of basing intercarrier compensation, in whole or in part, on CLECs' actual costs is unsound. That approach gives CLECs an entitlement to recover costs without regard to whether CLEC networks are efficient or whether CLECs' costs are efficiently incurred.

Under the efficient subsidy-free compensation arrangement, the rate for CLEC-to-ILEC compensation is *considerably* higher than the corresponding rate for ILEC-to-CLEC compensation. The reason is that the ILEC incurs considerably more costs to terminate a call originated by a CLEC than it avoids by terminating a call to a CLEC (instead of to the end user). Compensation that is more favorable than these efficient levels to CLECs would force ILECs and their customers to

subsidize CLECs. Compensation that is less favorable to the CLEC could inhibit efficient competition.

The subsidy-free compensation arrangement conveys no artificial advantage on any entity because that entity simply declares itself (or is declared) to be a carrier. Compensation in an efficient regime depends on productivity, not nomenclature.

CLECs can profitably arbitrage the existing intercarrier compensation arrangement, even where their entry increases the total (quality-adjusted) cost of the local telecommunications sector—considering both ILECs and CLECs. In particular, the widespread practice of putting CLEC switches in front of Internet service providers often increases total costs and generates economic waste.

The immediate effect of such arbitrage is to reduce the profits of ILECs. In the long-term, however, arbitrage will cause ILEC rates to rise. ILECs must be able to cover their total costs, including their cost of capital, in order to retain the ability and incentive to make infrastructure investments. Moreover, *aggregate* sector prices will increase. That is, the increases in prices paid by ILEC customers will outweigh the gains to CLECs and their customers.

In addition to the existing regime and the subsidy-free regime, we examine three alternative regimes for intercarrier compensation: 1) the DeGraba proposal; 2) the BellSouth proposal; and 3) the Atkinson-Barnakov proposal.

In our view, the BellSouth plan is superior to the existing regime and the DeGraba and Atkinson-Barnakov proposals. It both reduces subsidy and lowers the costs of regulation. It has the additional advantage of encouraging entry of all efficient (and some inefficient) competitors, because it is generally more favorable for CLECs than the subsidy-free regime. Furthermore, since the BellSouth plan involves no per-minute or per-call charges, it is ideally suited for the transition to packet-based technology.

The subsidy-free regime is, of course, the best regime for eliminating subsidies and avoiding unproductive arbitrage. It does, however, involve higher costs of regulation than does the BellSouth plan. The DeGraba proposal is less efficient than the subsidy-free plan and would not be very effective in reducing the costs of regulation. The Atkinson-Barnakov proposal, as it now stands, is not developed with enough specificity. Such specificity would have to be supplied before the proposal could be implemented.

A further necessary step to achieve economic efficiency and eliminate opportunities for unproductive arbitrage is to rationalize the whole structure of regulated ILEC rates. Efficiency requires that there be a single unified compensation regime across all jurisdictions for the function of carrying calls between ILEC customers and other carriers.

INTERCARRIER COMPENSATION TO PROMOTE EFFICIENCY OF THE LOCAL TELECOMMUNICATIONS SECTOR

1. INTRODUCTION

Today, a single carrier usually collects all the retail revenues associated with a telecommunications call.[2] Nevertheless, in a competitive telecommunications regime ("network of networks"), another carrier may do part of the work of completing the call. In such cases it is appropriate for the carrier that receives the retail revenues to compensate the other carrier(s) for the productive work that it does (they do).

There is growing concern that the FCC's existing policies regarding intercarrier compensation, especially with regard to local calls, are not working well. Among the significant problems fostered under the current regime are a variety of regulatory arbitrage opportunities and the waste of resources from redundant switch deployment in front of Internet service providers ("ISPs") to game the compensation scheme. The current regime also affords strong incentives for economically wasteful investments of scarce resources for acquisition of so-called "carrier status" and the perquisites associated therewith.

Responding to this concern, the FCC has opened a docket to reevaluate its policies regarding intercarrier compensation. We provide herein economic analysis that we hope will be useful in that reevaluation.

In particular, this paper provides an economic framework for analyzing intercarrier compensation. It is intended to contribute to the debate regarding possible restructuring of such compensation. We focus on how to design an intercarrier-compensation regime to promote efficiency, *i.e.*, to afford incentives for the deployment of the most efficient possible network of networks,

[2] Revenues for local calls (if there is a charge for them) are usually collected by the originating carrier. Revenues for interLATA calls are usually collected by the interexchange carrier, which is an intermediate carrier. Under some pricing plans, the terminating carrier collects the retail revenues.

encompassing both the incumbent local exchange carrier ("ILEC") and competing LECs ("CLECs"). We initially focus solely on the market for local services; both wireline and wireless.[3] In Section 6, we broaden our focus to include long-distance services.

We believe the regime for intercarrier compensation should be based on some overarching principles. From an economic perspective, the plan should be designed to promote the efficiency of the telecommunications sector. Three types of efficiency are relevant in this regard:

1. The regime should afford incentives for competitive entry and/or expansion wherever (but only where) the entry and/or expansion would improve the overall efficiency of the sector;
2. The regime should afford incentives for entrants to construct networks that maximally improve economic efficiency; and
3. The regime should not involve excessive regulation, which inevitably involves substantial transactions costs.

The organization of the paper is as follows: Section 2 discusses the problems associated with the existing compensation arrangements. In Section 3, we specify and describe a subsidy-free intercarrier compensation regime for local calls.[4] That regime promotes efficiency of types (1) and (2), described above. Sections 4 and 5 provide comparisons of the existing regime, the subsidy-free regime, and some alternative regimes that have been proposed for intercarrier compensation. In particular, we examine the proposals of DeGraba, BellSouth, and Atkinson-Barnekov. These are all bill-and-keep proposals, intended to reduce the costs of regulation. Section 6 discusses the need to shift cost recovery from carriers to end users. Section 7 states our conclusions.

2. PROBLEMS WITH THE EXISTING INTERCARRIER COMPENSATION REGIME

The Commission's *Notice* (and associated *OPP Working Papers*) are refreshing in their candor, both in terms of acknowledging the manifold adverse economic

[3] The CLEC, in our nomenclature, may be a wireless carrier, but wireless carriers typically supply long-distance, as well as local, services. Thus, they are interexchange carriers, as well as CLECs.

[4] Section 6 discusses how the rate structure must be rationalized if subsidies are to be avoided on non-local calls.

consequences of the current "crazy quilt" of disparate compensation arrangements *and* (perhaps somewhat surprisingly) the manifest *failures* of the proposed "reform" regimes to remedy fully these various disabilities. We demonstrate in this paper that the Commission's proposed "bill and keep" regimes lessen, *but do not remove*, the various arbitrage, gaming and mis-investment incentives that characterize the current regime. Before presenting our thoughts about what would constitute truly thoroughgoing reform, we summarize what has now become a familiar litany of economic disabilities.

2.1. PERVERSE INCENTIVES/PERVERSE RESULTS

The object of competitive reform in telecommunications is creation of an industrial organization that is capable of producing efficient delivery of desired products and services to the consuming public on a sustained *self-policing* (*i.e.*, unregulated) basis. The purpose of regulatory governance structures should be to enable private enterprises, competing *and* cooperating with one another,[5] to address consumer demands efficiently—to produce the desired set of services at least cost. It is most decidedly *not* to create profit opportunities for private enterprises through a variety of essentially *wasteful* "rent-seeking" activities, whether these entail investments in economically *redundant* productive capital, arbitrage of artificial price differentials that represent mere *artifacts* of regulation, *gaming* of regulatory arrangements to "free-ride" on the productive efforts of others (an activity that *reduces* incentives to deploy productive capital), or expenditure of scarce resources to acquire artificial advantages and economic rents through manipulation of governmental processes and bestowal of arbitrary regulatory "blessings" (*e.g.*, so-called "carrier" status, affording a variety of asymmetrical regulatory "favors").

As has often been remarked, but often more honored in the breach, the appropriate policy goal is promotion of *competition*, not *competitors*. Creation of artificial profit opportunities for enterprises to exploit is a perversion of putatively welfare-enhancing competition policy. The government's role should *not* be to create profit opportunities through the introduction of a variety of arbitrary differentials and artificial advantages; it is rather to create industrial organizational arrangements that afford enterprises the *freedom* to realize benefits by capitalizing on opportunities presented by authentic consumer demands and genuine productive capabilities.

[5] In a network of networks, production of effective communications requires (vertical) cooperation as well as (horizontal) competition among different enterprises.

Instead of focusing on the rights and privileges of "carriers," the Commission would be well advised, in our view, to focus rather on the impact of its policies on *consumers*. In particular, consumers should not find themselves worse off simply because of the specific identity of the carrier whom a called party has chosen.

2.2. REGULATORY FAILURES

Patrick DeGraba's *OPP Working Paper* ("Bill and Keep at the Central Office as the Efficient Interconnection Regime") does a nice job of "truth telling"—explicitly identifying a variety of serious, quantitatively significant economic failures that derive from the current disparate intercarrier compensation arrangements. Three distinct, although interrelated, failures can be identified:

1. Creation of arbitrary competitive advantages: The competitive process is ultimately a "discovery procedure"—a potentially highly (indeed, practically speaking, perhaps the single *most*) effective means for identifying efficient productive arrangements and the most valuable allocation of scarce resources. Creation of competitive advantages through arbitrary differences in regulatory treatment introduces "noise" into the system and thwarts the competitive process's ability to differentiate between the genuinely efficient and the merely artificially favored. While obviously promoting the economic interests of the suppliers whose capabilities are artificially advantaged (and thus spurring advocacy efforts to retain/acquire added advantages), this type of disparate treatment is antithetical to reliance on competition to screen the more from the less economically and productively efficient. Instead, regulatory preferences, as manifested in preferential treatment, substitute for the competitive *market's* judgments of comparative merit from the standpoint of maximizing consumer benefits. Such treatment *biases* the competitive experiment.[6]

2. The second type of regulatory failure that occurs under the current intercarrier compensation regime derives from carrier efforts to "game" the existing arrangements and, thereby, produce private benefits at the expense of the commonweal. DeGraba refers, for example, to the problem of "terminating access" (whereby unregulated CLECs exploit their monopoly status—their small market shares notwithstanding—and charge calling parties often egregiously

[6] *See* John Haring, "Implications of Asymmetric Regulation for Competition Policy Analysis," *OPP Working Paper Series No. 14*, December 1984.

high rates for call termination to their subscribers) and also, artfully, to the problem of "ISP reciprocal compensation" (the huge "money hemorrhaging"—ultimately from basic rate payers—that results from CLEC deployment of often redundant switching capacity in front of ISPs to collect call termination fees for Internet traffic). The current arrangements afford "operators" (we use the term advisedly) with ample incentives *and* the ability to offload/"socialize"/"externalize"/"inflict" costs on others, who are, only involuntarily, parties to the relevant exchanges. Want to shed the cost of your access line and the costly payments associated therewith? Then claim that your PBX-based supply of telephone service to folks who lease your spare office space entitles you to call yourself a carrier and reap a variety of benefits, including a free network connection!

3. The third type of organizational failure occurs as a consequence of the first two. The ability to reap huge benefits through regulatory influence encourages comparably large investments of scarce resources in essentially non-productive (*viz.,* mostly redistributive) activities, resources whose opportunity costs are substantial. In a famous paper on the "Social Costs of Monopoly," Richard Posner remarks that allocative welfare losses and income redistribution are the two consequences of exercise of market power predicted by economic theory. Posner argues, that while the resultant income redistributions do, indeed, represent consumers' losses that are *offset* by gains by monopolists, realization of these gains encourages investments of scarce resources in the fundamentally *unproductive* activity of redistribution. Thus, a substantial portion of such "gains" can be expected to be *wasted* in efforts to effect redistributions via, *inter alia*, regulatory processes. These scarce resources (*i.e.* resources with positive opportunity costs) are wasted in efforts to effect unproductive redistributions, rather than expended in productive efforts that *enhance* economic welfare. That is the essence of what is happening in the instant circumstances. The current compensation regime operates in such a way as to encourage anyone with eyes to see and funds for counsel to proselytize for acquisition of "carrier" status and the plethora of financial benefits that derive therefrom.

3. A SUBSIDY-FREE REGIME FOR LOCAL INTERCARRIER COMPENSATION

3.1. CHOICE OF EFFICIENT LECS

A critical task that the intercarrier-compensation regime must accomplish is to afford appropriate incentives with respect to entry and expansion by CLECs. An efficient regime must afford incentives for the selection of efficient LECs by customers.

Many analyses of pricing of local interconnection do not address this issue at all. Instead, they presume the result by focusing entirely on the terms of interconnection for a call between a customer of one LEC and a customer of another LEC. In particular, the DeGraba and Atkinson-Barnakov proposals frame the problem in this way, as does the declaration of Ordover and Willig on behalf of AT&T. A complete analysis must also examine whether the end users are afforded incentives to choose efficient LECs. The compensation structure should not afford artificial incentives (subsidies) for end users to use an inefficient carrier.

The issue of efficient intercarrier compensation should be posed more generally, as follows: Suppose that a call goes from an end user in one location to an end user in another location. How can the interconnection regime applicable to that call be designed so as to promote economic efficiency? In particular, what principles will avoid subsidies and lead to efficient competition for local calls?

We first examine the case in which both end users are ILEC customers. We then examine the cases in which the caller or the called party is a CLEC customer.

3.1.1. BOTH END-USERS ARE ILEC CUSTOMERS

If the ILEC serves both end users, it is responsible for end-to-end handling of the call as part of the local-service plan. The ILEC's costs of handling the call depend on its network architecture and the locations of the users within the local calling area. The possibilities, which are shown in Figure 1, are as follows[7]:

[7] In many cases, particularly in rural areas, remote switches are in wide use. These switches have limited functionality. They are able to complete intra-switch calls without the help of the host, but all other traffic is routed via the host. Generally, interconnection at a remote switch is not technically feasible, so when we refer to the cost of a local office, we will include the local office, the host office and the interconnecting trunks.

a. The two end users are served by the same local office; *e.g.*, end users A and B in Figure 1. The costs of the call are then the costs of one local switching occurrence.

b. The two end users are served by different local offices that are directly connected; *e.g.*, end user A and C in Figure 1. The costs of the call are then the costs of two local switching occurrences and one transmission link and signaling between the two local offices.

c. The call goes through a tandem switch; *e.g.*, a call between end users A and D in Figure 1. The costs are then the costs of two local switching occurrences, one tandem switching occurrence, and two transmission links and signaling between the local offices and the tandem office.

Figure 1

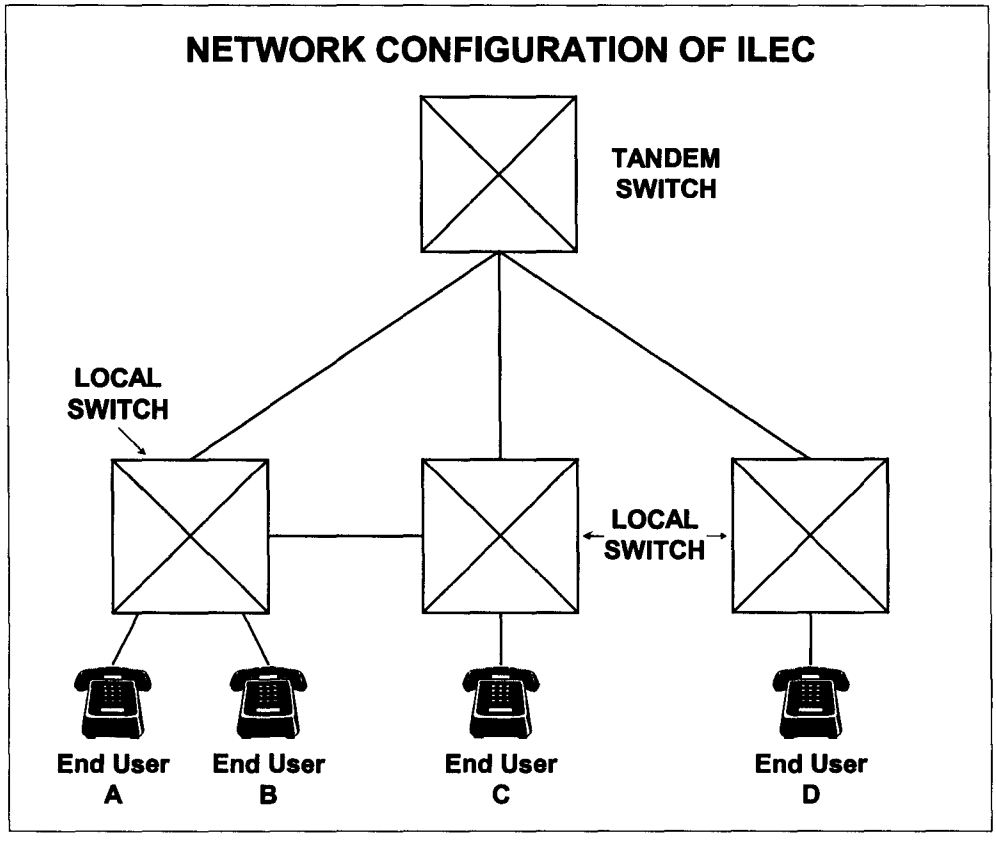

All three types of calls are common. The predominant type of call depends on the demographics of the local calling area. A rural area may serve most of its traffic within a host switch (or within a host and a number of subtending remote switches), while reaching other offices via a regional tandem. In this case, there would be no traffic under category (b). A large metropolitan area, on the other hand, may have a small fraction of its traffic terminated within the same switch, and a lot (but by no means all) of its traffic served on directly connected trunks. So, for example, in a rural state such as Mississippi, 73 percent of the traffic originates and terminates on the same switch, with only 8 percent being routed on direct trunks between switches. In Florida, on the other hand, with its large urban centers, only 39 percent of the traffic originates and terminates on the same switch, while 23 percent is carried on direct trunks between switches.

3.1.2. THE CALLED PARTY IS A CLEC CUSTOMER

Another possibility is that the called party is a customer of a CLEC, instead of the ILEC. In that case, the ILEC delivers the call to the CLEC instead of the end user. This may or may not improve economic efficiency, compared to the alternative of the called party's (as well as the caller's) using the ILEC.

The Basic Principle for Efficient CLEC Compensation is as follows: The compensation that the ILEC pays the CLEC for terminating a call should be the costs that the ILEC avoids by delivering the call to the CLEC rather than to the end user.

The logic behind this principle is straightforward and, in our view, compelling: If compensation is structured according to the principle, the CLEC will be able to handle the call profitably if and only if its doing so lowers the total cost of handling the call (by ILEC and CLEC, considered together). Thus, the compensation structure affords incentives for the CLEC to handle all calls for which its doing so improves overall economic efficiency.

The CLEC may be able to compete profitably, even if its costs of handling calls are higher (and it therefore loses money on call handling, according to this compensation arrangement). In particular, the CLEC may be able to supply access lines at lower cost than the ILEC. Or it may offer a differentiated service for which its own customers are willing to pay a premium. Wireless service certainly falls in this category. A CLEC may also provide other types of differentiation; e.g., the availability of fiber-based broadband services and/or superior billing arrangements. In all these cases, the Basic Principle sends the right economic signals. It affords incentives to ensure that the savings in access costs and increased revenues from service differentiation suffice to counterbalance the additional cost of call handling.

The logic of the Basic Principle can also be seen from the perspective of the ILEC's other customers. Under the Basic Principle, those customers are not directly affected by the called party's choice of LEC. The ILEC's costs, including the cost of compensation, are the same amount, either way:

a. The ILEC delivers the call to the end user; or

b. The ILEC delivers the call to the CLEC and pays compensation equal to the costs that it avoids by delivering the call to the CLEC rather than to the end user.

Any higher amount of compensation would require the ILEC and its customers to subsidize the CLEC. Any lower amount of compensation could inhibit efficient competition.

The Basic Principle does not depend at all on the CLEC's costs or its network architecture. Indeed, an efficient compensation arrangement *cannot* depend on those considerations. In particular, an efficient regime cannot give a CLEC an entitlement to recover costs, apart from whether those costs contribute to overall economic efficiency. Similarly, a CLEC cannot be given an entitlement to recover the costs of its actual network, apart from whether that network architecture contributes to overall economic efficiency.

On the contrary, the Basic Principle specifies the costs that CLECs must beat (either through lower costs or higher quality) if their handling a call is to improve economic efficiency. That standard depends entirely on the costs of the ILEC.

Ordover and Willig (p. 37) emphasize, ". . . incumbent local calling areas and network designs are not entitled to any presumption of efficiency." We emphasize that the above principle *is not based on any such presumption*. Rather, it is based on the irrefutable fact that if CLECs do not enter, the ILEC's costs will be the costs of the total local telecommunications sector. The goal is to ensure that if CLECs do profitably enter, the total sector costs, adjusted for quality, will not increase.

Even though compensation is based on the ILEC's costs, the arrangement does encourage efficient competition *among* CLECs. The CLEC that has the lowest costs (or that is otherwise the most efficient) will have a competitive advantage over its rivals. The arrangement also allows for niche competition, to the extent that different end users prefer the (differentiated) services of different CLECs.

An important desideratum for any intercarrier compensation plan is to afford no artificial incentives for an end user to call itself (himself, herself) a carrier. There are a virtually unlimited number of organizations (and even natural persons) that

could declare themselves to be carriers if there were benefit in so doing. Encouraging such declarations is not the path to economic efficiency.

The Basic Principle affords no artificial incentives to declare oneself to be a carrier. Doing so gives the declarer no entitlement. Compensation is based on the extent to which the *activities* of the (so-called) carrier are productive. They do not depend on declarations or on the definition of "carrier."

3.1.3. THE CALLER IS A CLEC CUSTOMER

Let us now consider the possibility that the caller is a customer of a CLEC, and the called party is a customer of the ILEC. In that case, the CLEC collects all the retail revenues (for local service), but the ILEC does part of the work of completing the call.

The Basic Principle for Efficient ILEC Compensation is as follows: The compensation that the CLEC pays the ILEC for terminating a call should be the costs that the ILEC incurs by so doing.

If the CLEC delivers the call to a tandem switch in the local calling area, the compensation would be the costs of tandem switching plus the costs of switching at the terminating end office plus the cost of transmission between the tandem and the terminating end office. If the CLEC delivers the call to the terminating end office, the compensation would be only the costs of local switching. If the CLEC delivers the call to the tandem office, but the volume of traffic to a particular end office is sufficient to justify a dedicated connection, then the costs for that call would be the cost of transmission between the tandem office and the terminating end office plus the cost of local switching.

In order to be non-confiscatory, regulation, whether price-caps or rate-of-return, must afford the ILEC the opportunity to recover its total costs, including the cost of capital. But regulators are not expected to give the ILEC much more than needed to satisfy this requirement. Consequently, it is not unreasonable to assume that *aggregate* ILEC regulated rates are approximately cost-oriented—notwithstanding the large amount of interservice contribution flows.

Given that the aggregate regulated rates of the ILEC are cost-oriented, the basic principle promotes economic efficiency. In particular, it allows the CLEC to offer the end user a better price than the ILEC's and still operate profitably if it is more efficient than the ILEC. At the same time, it does not afford artificial incentives for inefficient entry and expansion by the CLEC. The reasoning is as follows:

> The CLEC is likely to take the entire revenue from the caller's regulated services. It does part of the work of handling calls itself

> and pays the ILEC's costs for the remaining work. If the CLEC is more efficient than the ILEC, its costs of call handling plus the ILEC's costs will be less than the ILEC's costs for end-to-end service. But if the ILEC's aggregate regulated prices are cost oriented, this means that the CLEC can operate profitably.

The logic of this Basic Principle, like that of the previous one, can also be seen from the perspective of other ILEC customers. Those customers are unaffected if the ILEC gets paid exactly its cost for the services that it performs. Any lower amount of compensation would require the ILEC and its customers to subsidize the CLEC. Any higher amount of compensation could inhibit efficient competition.

3.2. LINE-SIDE INTERCONNECTION

Most CLECs interconnect at ILEC tandem switches, except that they may carry some traffic directly to/from the ILEC end office on dedicated facilities.

Another possibility is for CLECs to interconnect on the line side of an ILEC end office. There is, in itself, nothing wrong with this practice, but it can amplify the perverse effects of a subsidy-laden intercarrier-compensation regime, as exemplified by the current regime.

If a CLEC interconnects on the line side of an end office, the subsidy-free compensation is the same as for an end user who connects at that end office. In particular, it follows from the Basic Principle for CLEC compensation that the CLEC should receive no compensation for calls that it receives. The ILEC saves no costs whatsoever by delivering the call to the CLEC rather than to an end user at or near the CLEC's location.

If CLECs that connect on the line side of end offices are treated more favorably than end users, then every end user will have the incentive to declare itself (himself, herself) to be a CLEC. A compensation scheme that involves such incentives cannot possibly be efficient. Clearly, what is being rewarded is not productivity, but rather favored regulatory status. Thus, market participants have the incentive not to be productive, but rather to achieve the favored status. They may waste productive resources in their effort to do so.

Today, paging companies have the favored regulatory status of "carriers." Under the existing intercarrier compensation regime, they receive sizable subsidies, which ultimately must be borne by ILEC ratepayers. That is, ILEC customers are called upon to pay part of the incremental costs of paging—costs that would not be incurred if paging service were not supplied.

The issue of whether ISPs should be considered carriers has assumed great importance. If they did have the favored regulatory status as "carriers," they would qualify for the same subsidies that paging companies get—but on a much larger scale. These massive and counterproductive subsidies have been avoided by *not* treating ISPs as carriers. Nevertheless, the dependence of massive subsidies on regulatory nomenclature highlights the infirmities of the existing regime for intercarrier compensation. *Compensation should depend on productivity—not nomenclature.*

3.3. THE DUBIOUS BENEFITS OF INEFFICIENT COMPETITION

The above analysis focuses on encouraging *efficient* competition. An alternative approach is to develop policies that encourage competition, regardless of whether that competition is efficient. The latter policy is suspect for the following reasons:

- It increases total (quality-adjusted) costs of the overall telecommunications sector, commensurate with the extent to which inefficient competition is encouraged.
- It encourages entrants to build inefficient networks. In particular, inefficiently low compensation to ILECs encourages CLECs to use ILEC facilities, where constructing their own facilities would be more efficient. Inefficiently high compensation to CLECs encourages CLECs to construct redundant facilities (e.g., switches in front of ISPs) in order to qualify for compensation.
- It reduces the incentives to compete vigorously in the marketplace, because commercial success depends more on success in the regulatory hearing room.

One might argue that the efficiency of entrants is only temporarily low and will improve over time; after it does, policies that encourage efficient competition can be implemented. This is the long discredited "infant-industry" argument. To be sure, the efficiency of entrants may, indeed, improve over time. Historical experience, however, has shown that a likely result of infant-industry protection is to give inefficient competitors a vested interest in the *status quo*. Regulators, concerned about the possible failure of (inefficient) entrants, will be under great pressure to continue skewing competitive policies and thereby perpetuating inefficiency.[8]

[8] John Haring, "The FCC, the OCCs and the Exploitation of Affection," *OPP Working Paper Series*, June 1985.

3.4. COST ESTIMATION ISSUES

Ordover-Willig imply that the problems with the existing regime derive primarily from mis-estimation of costs. To be sure, mis-estimation of costs may aggravate the problems. But the above analysis demonstrates that even if cost elements were estimated *with no error at all*, the existing regime would embody large subsidies. It follows that improved cost estimation can solve only part of the problem.

The remainder of the problem is more fundamental. CLECs are now compensated for some cost elements for which they would not be compensated under an efficient subsidy-free regime. The compensation for these elements constitutes a subsidy, which must ultimately be paid by ILEC ratepayers. This aspect of the existing intercarrier-compensation regime must be fixed in order to promote efficient competition and discourage unproductive arbitrage.

3.5. COSTS OF REGULATION

The subsidy-free compensation regime described above leads to efficient competition and discourages unproductive arbitrage. Like the existing regime, however, it involves significant costs of regulation. In particular, the amount of compensation depends on switching and transmission costs, which must be estimated. Such estimates are subject to regulatory approval and are inevitably contentious.

The bill-and-keep plans described below are intended to lower the costs of regulation. In evaluating alternative proposals for intercarrier compensation, the savings in costs of regulation must be weighed against the benefits of promoting efficient competition and discouraging unproductive arbitrage. In this regard, we note that the current regime fails both ways. It involves substantial costs of regulation and also encourages unproductive arbitrage.

3.6. CALLER PAYS VS. CALLING PARTY PAYS

DeGraba, Atkinson-Barnakov, and Ordover-Willig debate the issue of whether the caller or the called party should pay for calls, or whether the costs should be shared.

Ordover-Willig observe, correctly in our view, that a large part of the positive externalities associated with telephone calling can be easily internalized. For example, each party could agree to call the other half the time. In addition, businesses that make telephone calls to their customers can be expected in some way to recoup the cost of those calls from the customers. For these calls, economic efficiency may not depend on whether the caller or the called party is billed for the calls.

Ordover-Willig also correctly observe that negative call externalities (*e.g.*, calls from telemarketers) are significant. Those externalities cannot be so easily internalized and can diminish economic efficiency. Economic efficiency may increase if these calls are billed to the caller.

Nevertheless, Ordover-Willig's focus on this issue in the context of intercarrier compensation is misplaced. The intercarrier compensation regime will have little effect on telemarketing, because the costs involved are a small part of the total costs of a telemarketing operation. The intercarrier compensation regime will, however, have a large effect in determining whether the local telecommunications sector is populated with efficient competitors or with a vast array of arbitrageurs whose unproductive activities are ultimately funded by ILEC ratepayers. Achieving the former and avoiding the latter should be the focus in designing the regime for intercarrier compensation.

4. ALTERNATIVE PROPOSALS FOR LOCAL INTERCARRIER COMPENSATION

We have already discussed the existing regime and the subsidy-free regime. In this and the next section, we make comparisons among these alternatives and three others: DeGraba's proposal, the BellSouth proposal, and the Atkinson-Barnakov proposal.

Under all these alternatives, the parties can and should be free to negotiate something other than the specified compensation arrangement. The specified arrangement is then the default outcome, which applies if negotiations fail. The default outcome defines the parties' "property rights" that condition the negotiations. Negotiations are much more likely to be successful if these property rights are clearly defined.

Negotiations are successful where the parties can work out an arrangement that is better for both than the default outcome. In particular, the parties may negotiate to meet their special needs or to deal with special circumstances that are not envisioned in the general specification of the default compensation arrangement. Such arrangements are likely to improve general economic efficiency, as well as further the private interests of the parties.

In this section, we describe the DeGraba, BellSouth and Atkinson-Barnakov proposals and make observations regarding the costs of regulation associated with each. In the next section, we assess the extent to which each of the various alternatives involves subsidies.

4.1. DEGRABA PROPOSAL

The DeGraba proposal is that the originating Party pays no compensation to the terminating Party if it delivers the call to the terminating Party's end office. If the terminating Party does not have an end office, the originating Party delivers the call to the terminating Party's POP. The DeGraba proposal acknowledges that some sort of limitation would need to be set regarding POPs (one per local calling area, one per LATA, etc.), but does not specifically recommend a requirement.

In reality, ILECs can generally conveniently deliver calls to the CLEC POP and often do so. Under the DeGraba proposal, there is therefore no need to develop cost estimates for those calls and to have regulatory procedures to approve the estimates.

In the other direction, CLECs *sometimes* deliver calls to the ILEC terminating end office. Often, however, they deliver calls to a tandem switch instead. In particular, they do so where they do not have sufficient traffic to make direct connections to the terminating end office cost-effective.

In these cases, cost estimates would still need to be developed and there would still need to be (contentious) regulatory procedures to approve them. The costs in question are for tandem switching and for interoffice transmission and signaling between the ILEC point of interconnection ("POI") and the terminating end office. Thus, under the DeGraba proposal, there are still considerable costs of regulation.

4.2. BELLSOUTH PROPOSAL

The BellSouth proposal provides for interconnection to occur at the ILEC tandem office. Interconnection as described herein refers to the physical point where the two parties' networks meet. The interconnection is therefore in the wire center that houses the tandem switch, but does not directly specify how the calls will be carried. BellSouth proposes that the ILEC and the CLEC have an obligation to cooperate to put in place direct end-office trunking if there is at least a full DS1 level of traffic being carried between a particular end office and the CLEC. Otherwise, the CLEC lines can be connected to the tandem switch for the distribution of CLEC traffic to the rest of the ILEC network.

This arrangement has several advantages:

- It is almost always convenient for carriers to connect at tandem offices (In contrast, it is often not convenient or cost-effective for them to interconnect at every end office.);

- Efficient direct routing is used instead of tandem switching on heavily used routes; and
- The CLECs are responsible for the connection between the CLEC and the tandem office. They can interconnect using their own facilities, lease facilities from a third party or lease facilities from the ILEC so as to minimize costs.

The BellSouth proposal further stipulates that if a carrier delivers a call to the tandem office, it pays no intercarrier compensation; *i.e.,* bill and keep.

Because interconnection at the tandem office is virtually always convenient, alternative interconnection arrangements need not be developed and specified. Thus, all intercarrier traffic is subject to the bill-and-keep arrangement (unless the parties negotiate some alternative arrangement). Further, this proposal is administratively straightforward and gives clear guidance for implementation.

The BellSouth proposal obviates ongoing regulatory rate setting of intercarrier compensation charges. It thereby effectively eliminates the costs of regulation associated with cost estimation and contentious regulatory procedures to approve such cost estimates.

The CLEC may rely on the ILEC to supply the joining link between its POP and the tandem office. Since this joining link can often be supplied by any of a number of providers, it should generally be priced at market rates. At the very least, market forces can provide a guide, minimizing the regulatory costs. In any event there is no need to develop cost estimates for the larger cost elements; *viz.*, switching and interoffice transmission (including signaling).

The BellSouth proposal has the additional advantage of being ideally suited for the transition to packet-based technology. The proposal involves no per-minute or per-call charges. It would work equally well if packets, rather than circuit-switched calls, were being carried. In contrast, plans that involve per-minute or per-call charges are unworkable with packet technology.

4.3. ATKINSON-BARNAKOV PROPOSAL

The Atkinson-Barnakov proposal is that each carrier is responsible for its own costs. The costs of interconnection facilities are shared equally among carriers.

The Atkinson-Barnakov proposal, as it now stands, is not developed with enough specificity. Such specificity would have to be supplied before the proposal could be implemented. Otherwise, the regulatory costs of resolving disputes would be excessive. In particular, the Atkinson-Barnakov proposal is not explicit about the appropriate POI—an issue that must be resolved.

If the ILEC's tandem office were the appropriate POI, Atkinson-Barnakov's proposal would be bill and keep, except that the costs of the joining link between the CLEC's POP and the ILEC's tandem office would be shared.

5. SUBSIDIES UNDER ALTERNATIVE PROPOSALS FOR INTERCARRIER COMPENSATION

In this section, we examine the extent to which each of the alternatives for intercarrier compensation:

- Affords incentives for inefficient entry or disincentives for efficient entry;
- Enables and encourages unproductive arbitrage; and/or
- Provides artificial incentives for end users to acquire carrier status.

Interconnection for this case is illustrated in Figure 2. Figure 2 is the same as Figure 1, except that end user A has changed from being an ILEC customer to being a CLEC customer.

Figure 2

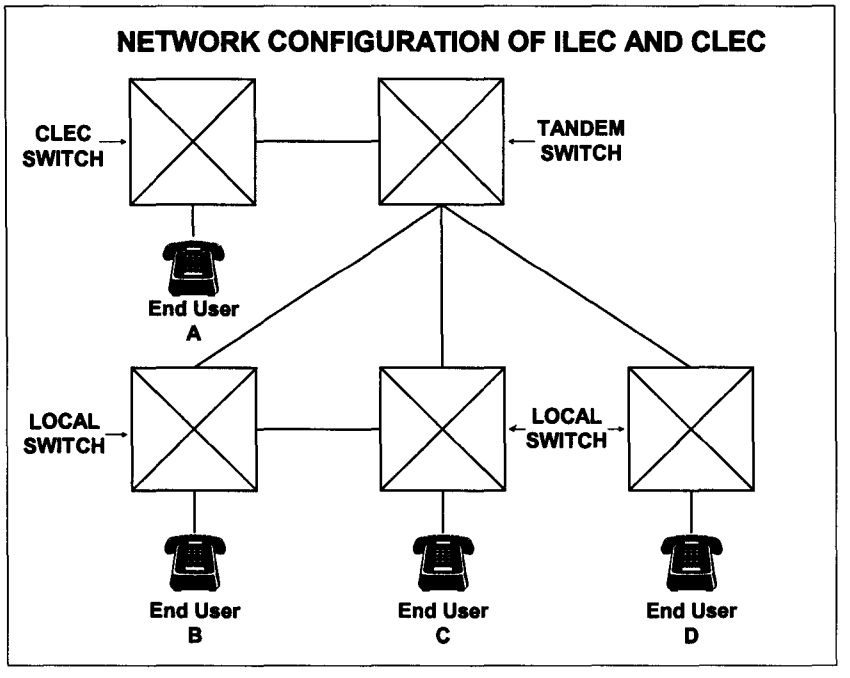

Let us now examine the extent to which the various alternative compensation arrangements promote economic efficiency for the types of calls described in Section 4. The comparison is based on the following assumptions:

- The CLEC customer (end user A) is in the serving area of the ILEC end office that serves end user B.
- The per-minute cost of the ILEC's direct connection (between the end office of end user A and that of end user B in Figure 2) is the same as the per-minute cost of common transport. This assumption is reasonable, because ILEC trunks used for direct connections are usually close to fully loaded;
- It is assumed that the other carrier bears the direct cost of the link, but may get part, or all, of that cost back through the compensation arrangement. The per-minute cost is estimated to be the same as the per-minute cost of common transport, because the joining link, even for a small CLEC, is likely to be close to fully loaded.
- Interconnection takes place at the tandem office, where the calls may be directly connected to the end office or switched through the tandem. It is assumed in Table 1 that half the calls are routed each of these two ways.
- It is assumed that the ILEC bears the direct cost of carrying the call between the tandem office and the end office but may recover part or all of that cost from the other carrier.[9]
- In the Atkinson-Barnakov proposal, it is assumed that the tandem office is regarded as the POI. The cost of the intereconnecting facility is then evenly divided between the interconnecting carriers.

5.1. QUANTITATIVE COMPARISON

We now compare the various alternatives in terms of specific cost estimates. Data have been received from BellSouth delineating, for each state in its territory, the amount of local traffic that is intra-office, the amount that travels over direct

[9] Under the existing regime, other carriers sometimes pick up calls directly from, or deliver calls directly to, the ILEC end office. The calls are not switched at the ILEC tandem switch. This practice makes little difference for our overall results. The other carrier incurs greater cost but saves an approximately equal amount of compensation, compared to having the ILEC carry the call on this link.

trunks between end offices, and the amount that is switched through a tandem. As indicated by our previous discussion, efficient compensation and subsidies for any given compensation arrangement differ among these three types of calls. BellSouth has provided interstate access rates for local switching, tandem switching and transport elements. Since these prices are supposed to be cost-oriented, we will use them as indicators of the costs of these elements.[10]

Of the nine states in the BellSouth territory, Florida and Mississippi are at opposite extremes in terms of the proportion of traffic in the various categories. Only 39 percent of Florida's traffic is intra-office, while 23 percent is carried on direct intra-office trunks and 38 percent is switched through a tandem office. In Mississippi, in contrast, 73 percent of the traffic is intra-office, while just 8 percent is carried on direct intra-office trunks, and 19 percent is switched through a tandem office. We will analyze the payments and subsidies in these two states to demonstrate and bound the implications of the various plans.

Results for Florida and Mississippi are shown below in Tables 1 and 2, respectively.[11]

[10] In the Appendix, we perform this same analysis using state-determined compensation rates for local traffic. Although the absolute rates differ substantially, our qualitative conclusions regarding comparisons among various compensation arrangements remain unchanged.

[11] The calculations underlying these tables are discussed in the Appendix.

Table 1

Intercarrier Compensation under Various Regimes in Florida (Cents per Minute)		
Call Direction	CLEC-ILEC	ILEC-CLEC
Intercarrier Compensation	CLEC to ILEC	ILEC to CLEC
Subsidy-Free Regime	0.477750	0.116002
Existing Regime	0.477750	0.375100
DeGraba Proposal	0.181950	0.079300
Atkinson-Barnakov Proposal	(0.039650)	0.039650
BellSouth proposal	0.000000	0.000000
Subsidies (ILEC to CLEC)		
Existing Regime	0.0000	0.2591
DeGraba Proposal	0.2958	(0.0367)
Atkinson-Barnakov Proposal	0.5174	(0.0764)
BellSouth Proposal	0.4778	(0.1160)

Table 2

Intercarrier Compensation under Various Regimes in Mississippi (Cents per Minute)		
Call Direction	CLEC-ILEC	ILEC-CLEC
Intercarrier Compensation	CLEC to ILEC	ILEC to CLEC
Subsidy-Free Regime	0.477750	(0.046103)
Existing Regime	0.477750	0.375100
DeGraba Proposal	0.181950	0.079300
Atkinson-Barnakov Proposal	(0.039650)	0.039650
BellSouth proposal	0.000000	0.000000
Subsidies (ILEC to CLEC)		
Existing Regime	0.0000	0.4212
DeGraba Proposal	0.2958	0.1254
Atkinson-Barnakov Proposal	0.5174	0.0858
BellSouth Proposal	0.4778	0.0461

The following conclusions can be drawn from these tables:

The efficient subsidy-free rate for CLEC to ILEC compensation is *considerably* higher than the corresponding rate for ILEC to CLEC compensation. The reason is that the ILEC incurs considerably more costs to terminate a call originated by a CLEC than it avoids by terminating a call to a CLEC (instead of to the end user). The extreme case in Mississippi, where efficient ILEC to CLEC compensation is negative. In that state, because so much ILEC traffic originates and terminates in the same office, CLECs simply add costs to the process of call handling. That is, because of CLEC participation, the ILEC incurs more costs than it would to provide end-to-end service, while the CLEC also incurs costs. Under these circumstances, any positive rate (or even a zero rate) for ILEC to CLEC compensation would encourage inefficient competition. As previously discussed, CLECs may nevertheless be able to operate profitably under an efficient compensation arrangement if they have lower access costs and/or provide valuable differentiated services, for which their own customers are willing to pay premiums. These advantages may overbalance the increase that they cause (and

under an efficient compensation arrangement are required to bear) in the costs of call handling.

Under the existing regime, CLEC-to-ILEC compensation is efficient and subsidy-free, but ILEC-to-CLEC compensation involves large subsidies from ILECs and their customers to CLECs. It is therefore hardly surprising that CLECs have specialized in customers that receive disproportionately many incoming calls; especially ISPs. The existing regime affords the incentive through subsidies to CLECs that do so. CLECs have responded to this incentive.

The BellSouth plan is more favorable to competitors than the efficient subsidy-free plan. In Mississippi, the BellSouth plan is more favorable, regardless of the CLEC's mix of outgoing and incoming traffic. In Florida, it is more favorable unless the CLEC's traffic is dominated by incoming calls, and the CLEC can easily target its marketing efforts at customers who have the desired mix of traffic. For a CLEC with balanced traffic, the BellSouth plan is more favorable than the existing regime. It encourages entry by some inefficient CLECs, as well as all efficient CLECs. BellSouth supports this plan, because it believes that the benefits of lessening regulation (discussed above) and reducing uncertainty in the market place outweigh the disadvantage of having to pay the subsidies to CLECs.

The DeGraba proposal reduces the subsidies of the existing regime in ILEC-to-CLEC compensation, but it introduces new subsidies in CLEC-to-ILEC compensation.

The particular variant of the Atkinson-Barnakov proposal that we are analyzing is similar to the BellSouth plan, but it involves slightly larger subsidies from ILECs and their customers to CLECs.

5.2. INCENTIVES OF END USERS TO DECLARE THEMSELVES TO BE CARRIERS

Compared to the existing regime, the DeGraba and Atkinson-Barnakov reduce the subsidy that an end user can receive if it (he, she) can achieve the favored regulatory status of "carrier." Under both proposals, the cost of local switching would not be subsidized. But under the DeGraba proposal, the joining link (which is the loop in the case of an end user) is subsidized. Under the Atkinson-Barnakov proposal, half the cost of the joining link (loop) would be subsidized.

DeGraba acknowledges this problem with his proposal. He states (p. 25), "COBAK [central office bill and keep] will not completely eliminate the incentive of a business that primarily receives calls to claim to be a network...the business may be able to avoid having to pay a retail end-user rate for a business line." He suggests (p. 33) that this problem can be ameliorated somewhat by requiring

"some showing that the business claiming to be a network exhibits characteristics of a network, such as ownership of a switch." This could, however, easily exacerbate the problem, since firms may well respond by conforming to this selected "signal." The fact that a "carrier" possesses a "switch" does not signal its authentic productivity—the switch may be wholly or largely redundant in the vertical chain of production involved in call completion and simply/largely represent a successful attempt to game the compensation regime.

6. RATIONALIZING THE REGULATED RATE STRUCTURE

An efficient system for local intercarrier compensation solves only part of the problem of promoting efficient competition and discouraging unproductive arbitrage. Additionally, the whole structure of regulated ILEC rates needs to be rationalized. There should be a unified compensation regime across jurisdictions for the function of carrying calls between ILEC customers and other carriers.

Currently, three regimes that apply to different types of calls have been established for intercarrier compensation:

1. Local calls: Local exchange carriers ("LECs") collect retail revenues from their customers for local service, which entitles the customers to make calls within a specified local calling area. Usage charges, if any, for local calls are generally far lower than charges for toll calls. Intercarrier compensation is sometimes paid if a local call goes to the customer of another LEC. This same intercarrier compensation regime has been applied to fixed-to-wireless calls and wireless-to-fixed calls.
2. Interstate toll calls: Interstate carriers ("IXCs") collect the toll revenues, but the originating and terminating LECs do part of the work. Intercarrier compensation takes the form of interstate access charges, which are regulated by the Federal Communications Commission ("FCC") and paid to the LECs by the IXCs. [12]

[12] It is possible that the IXC and one or both the LECs are the same carrier. In that case, intercarrier compensation is an internal transaction, but it may be subject to requirements for separate accounting.

3. Intrastate toll calls: This regime is the same as for interstate toll calls, except that access charges are regulated by state regulatory commissions.[13]

In general, all three sets of rates differ from one other. More importantly, the local termination charge is always paid by the originating carrier; while access charges are paid by the IXC, regardless of the direction of the call.

6.1. ARBITRAGE OPPORTUNITIES

The existing rate structure affords incentives for inefficient CLECs to arbitrage the unbalanced regulatory rate structure; *i.e.*, to exploit that rate structure and operate profitably, even where their participation lessens overall economic efficiency. These incentives would exist even if the local intercarrier compensation arrangement were completely subsidy free, as described above. To profitably engage in such arbitrage, CLECs need only focus their marketing efforts on customers who purchase disproportionately large amounts of toll services. Because access charges are currently more remunerative than local services, CLECs can profitably serve such customers, even though their entry reduces the productivity of the local telecommunications sector.

The immediate effect of such arbitrage is to reduce ILEC profits. In the long-term, however, the ILEC's rates must suffice to cover its costs, including its cost of capital. Otherwise, the ILEC would not have the ability and incentive to make infrastructure investments. Hence, the long-term effect of arbitrage is to increase ILEC rates above what they would otherwise need to be. Put another way, arbitrage is not a free lunch for CLECs and their customers; the lunch must ultimately be paid for by (remaining) ILEC customers.

Furthermore, if arbitrage lowers the productivity of the local telecommunications sector, aggregate telecommunications prices will also rise in the long term. That is, the increase in ILEC rates will more than outweigh the gains enjoyed by CLECs and their customers.

Moreover, charging different prices for the same functionality inevitably creates additional arbitrage possibilities. The ILEC often cannot tell whether a particular call is local, intrastate, or interstate. Thus, customers and other carriers have the incentive and the ability to disguise toll calls as local calls. By doing so, they can pay lower local interconnection charges instead of higher interstate and intrastate

[13] We do not herein address international interconnection or interconnection *between* ILECs in the U.S. These types of interconnection involve institutional considerations that are beyond the scope of this paper.

access charges. If intrastate access charges exceed interstate access charges, customers and other carriers also have the ability and incentive to disguise intrastate toll calls as interstate calls.

Packet technology will make the problem even worse. Already, voice over Internet protocols ("VoIP") provides an effective way to arbitrage the unbalanced regulatory rate structure. Packets that go to ISPs are treated as local traffic. Such packets may, however, be used for VoIP. As a result, the end users avoid having to pay access charges.

The current rate structure will become completely untenable in the future, as local, interstate and (non-local) intrastate packets become commingled. Charging for individual packets is unusual and would involve substantial transactions costs. Furthermore, the destination of particular packets, in terms of local calling area or state, is generally unknown. Thus, there would be no practical way to determine appropriate prices under the current irrational rate structure.

6.2. A RATIONALIZED RATE STRUCTURE

The Basic Principle for a rational rate structure is as follows: A unified intercarrier compensation regime across all jurisdictions should apply for the function of connecting a LEC customer to another carrier. Those regimes should not vary, depending on whether the call is local, interstate or intrastate.

Only with such a rational rate structure can one avoid encouraging unproductive arbitrage among the different rates for intercarrier compensation.

The Basic Principle can be applied together with any of the plans for local intercarrier compensation described above. All rates, regardless of jurisdiction, should be encompassed by the uniform compensation regime.

Rationalizing the regulated rate structure is an explicit part of the BellSouth proposal for intercarrier compensation. Under the BellSouth proposal, the ILEC would deliver outgoing toll calls to IXCs at the appropriate POIs, and no money would change hands. On incoming toll calls, the IXCs would deliver the calls to the appropriate POIs, and no money would change hands between carriers.

This arrangement constitutes an expansion of what is supplied for the fixed monthly charges that end users pay. Today, those prices include subscriber line charges ("SLCs"), which cover part, but not all, of the costs of local distribution of toll calls. Remaining costs of distributing toll calls are billed separately to IXCs. With a rational rate structure, all these costs would be recovered through end-user charges.

A rationalized rate structure would address an important concern of Ordover-Willig (pp. 36-38): Suppose a CLEC wants to supply local service, but its POP is outside the local calling area. Supplying local service is possible in this case, so long as the ILEC regulated rate structure has been rationalized. The CLEC simply links to the ILEC's POI in the calling area that it wishes to serve. Under the BellSouth plan, the CLEC would bear the cost of the link, but that cost is not likely to be excessive.[14] If that cost *is* excessive, the likely reason is that the CLEC chose a network architecture which is not efficient for providing local service in that particular calling area. Of course, such an operation can nonetheless be profitable, if the CLEC can offload costs on ILEC ratepayers.

It follows that this concern need not be a consideration in the determination of the intercarrier compensation regime. That regime should be designed, as discussed above, to promote efficiency and reduce the costs of regulation.

6.3. APPROPRIATE COST RECOVERY

Historically, regulators have mandated a telecommunications rate structure under which:

- Toll calls were priced far above incremental costs; and
- The contribution from toll calls was used to keep local prices below what they would otherwise be—consistent with the suppliers of local exchange service having the opportunity to recover their costs, including the cost of capital.

In the post-divestiture period, these contributions have flowed through to ILECs via access charges. If the ILEC regulated structure is rationalized, the contributions from access charges will disappear. In order for the ILEC to have the opportunity to recover its total costs under these circumstances, end-user charges will need to increase.

Put another way, achieving a rational rate structure requires that costs be recovered in the same manner as they are incurred. That is, end users will need to pay directly for the costs that they cause, rather than indirectly through usage-dependent access charges. Making this change would improve economic efficiency, even apart from competition. It is essential under a competitive regime for local telecommunications, if that regime is to yield anything

[14] Under the DeGraba and Atkinson-Barnakov proposals, the ILEC bears part of the costs of joining links. Nevertheless, the CLEC would presumably be required to bear any incremental costs that accrue because its POP is distant (far outside the local calling area).

approximating an efficient outcome. If end users do not pay directly for the costs that they cause, the total costs of the local telecommunications sector (considering ILEC and CLECs together) are likely to be far higher than necessary. Those higher costs will ultimately be borne by telecommunications customers.

7. CONCLUSIONS

This paper has defined and described a subsidy-free pricing arrangement for intercarrier compensation that is economically efficient—apart from the (transactions) costs of regulation. Under that arrangement, prices closely follow costs, there are no subsidies, and there is no opportunity for arbitrage. This arrangement is then compared with some other alternatives. These include:

- The existing arrangement, which is known to have significant distortions and opportunities for arbitrage;
- The BellSouth plan, which is bill and keep for calls delivered to the ILEC's tandem office;
- The DeGraba proposal, which is bill and keep for calls delivered to the terminating end office; and
- The Atkinson-Barnakov proposals, under which each carrier bears the costs of its own network and interconnection costs are shared equally between the two carriers.

Our conclusions regarding efficiency and subsidies under these various plans are as follows:

1. The efficient subsidy-free rate for CLEC to ILEC compensation is *considerably* higher than the corresponding rate for ILEC to CLEC compensation.
2. Under the existing regime, CLEC-to-ILEC compensation is efficient and subsidy-free, but ILEC-to-CLEC compensation involves large subsidies from ILECs and their customers to CLECs.
3. The BellSouth plan is more favorable to competitors than the efficient subsidy-free plan.
4. The DeGraba proposal avoids the subsidies of the existing regime in ILEC-to-CLEC compensation, but it introduces new subsidies in CLEC-to-ILEC compensation.

5. A particular variant of the Atkinson-Barnakov proposal is similar to the BellSouth plan, but it involves slightly larger subsidies from ILEC customers to CLECs.

The BellSouth plan is the most effective in terms of reducing the costs of regulation. The reason is that interconnection is almost always convenient at the ILEC tandem office. Consequently, regulators would not need to get involved in determining costs, and contentious proceedings to evaluate cost estimates would be unnecessary.

The DeGraba plan is not very effective in reducing the costs of regulation, because interconnection at the terminating end office is often not convenient for CLECs. Consequently, regulators would still need to get involved in determining costs, and contentious proceeding to evaluate cost estimates would still be necessary.

The Atkinson-Barnakov proposal, as it now stands, is not developed with enough specificity. Such specificity would have to be supplied before the proposal could be implemented. Otherwise, the regulatory costs of resolving disputes would be excessive. In particular, the Atkinson-Barnakov proposal is not explicit about the appropriate POI.

The above analysis focuses narrowly on the question of intercarrier compensation among LECs. Additionally, in order to develop a rational comprehensive efficient solution, intercarrier compensation among all carriers must be examined. In order to develop efficient arrangements in this context, prices must be restructured so that costs that are caused by end users are paid directly by the end users, rather than indirectly in part, through payments to IXCs, as is currently the case. Furthermore, prices should be based on the services provided, not on jurisdiction. If rates are not restructured in this way, opportunities for arbitrage, and just plain cheating, will abound, as parties can mis-identify their calls in order to obtain the most favorable price.

APPENDIX

Table A shows the calculations underlying Tables 1 and 2 in the text. It is derived by summing the costs of the elements (illustrated in Figure 2) involved in calls between various end users.

Table A

Comparison of Alternative Compensation Regimes

A. Compensation from ILEC to Other Carrier

	Call From B to A	Call From C to A	Call From D to A	Call From A to B	Call From A to C	Call From A to D
Subsidy-Free Regime	- M/2 - T	L - M/2	L + T	- L - M/2 - T	- L - M/2 - T	- L - M/2 - T
Existing Regime	L + T	L + T	L + T	- L - M/2 - T	- L - M/2 - T	- L - M/2 - T
deGraba Proposal	T	T	T	- M/2 - T	- M/2 - T	- M/2 - T
Atkinson-Barnakov Proposal	T/2	T/2	T/2	T/2	T/2	T/2
BellSouth Proposal	0	0	0	0	0	0

B. Subsidy from ILEC Customer to Other Carrier and Its Customers

	Call From B to A	Call From C to A	Call From D to A	Call From A to B	Call From A to C	Call From A to D
Existing Regime	L + M/2 + 2T	M/2 + T	0	0	0	0
deGraba Proposal	M/2 + 2T	- L + M/2 + T	- L	L	L	L
Atkinson-Barnakov Proposal	M/2 + 3T/2	- L + M/2 + T/2	- L - T/2	L + M/2 + 3T/2	L + M + 3T/2	L + M/2 + 3T/2
BellSouth Proposal	M/2 + T	- L + M/2	- L - T	L + M/2 + T	L + M/2 + T	L + M/2 + T

Legend

L	Per-minute cost of local switching
M	Per-minute cost of tandem switching
T	Per-minute cost of common transport, direct ILEC connections, and joining links

The results in Table A are quite instructive. The table shows that the existing regime involves no subsidies on calls from the CLEC to the ILEC. That is, the costs of carrying a call from A (assumed to be the CLEC customer) to any of the ILEC customers (denoted B, C and D) is the cost of a connecting link, a local switch and one-half of a tandem switch (half the traffic incurring the cost of a tandem switch, and half incurring no tandem switching costs) in both the subsidy-

free regime and the existing arrangement. On calls going the other way, however, the regime involves significant subsidies from ILEC customers to the CLEC and its customers.[15] Subsidies arise for two of the three types of calls.

DeGraba's proposal substantially reduces the subsidy on calls from ILEC customers to the CLEC and its customers. In particular, the subsidy is reduced by the amount of local switching costs. The subsidy still remains positive for calls from end user B to end user A. The subsidy may be either positive or negative for calls from C to A. The subsidy definitely becomes negative for calls from D to A; *i.e.*, the CLEC and its customers subsidize ILEC customers.

At the same time, the DeGraba proposal would create a subsidy that does not now exist on calls from CLEC to ILEC. The amount of the subsidy is local switching cost. The subsidy goes from ILEC customers to the CLEC and its customers.

The BellSouth proposal involves large subsidies from the ILEC and its customers to the CLECs on calls from CLEC to ILEC. This result is hardly surprising. The CLEC need only deliver the call to the tandem office and gets a free ride for the rest of the call.

On calls from ILEC to CLEC, the subsidies under the BellSouth proposal are positive or negative, depending on the type of call. Where the subsidies are negative (*i.e.*, CLEC to ILEC), they are smaller in absolute value than the ILEC-to-CLEC subsidies on calls going the other direction.

The Atkinson-Barnakov is uniformly more favorable to the other carrier than the BellSouth proposal by the cost of half the joining link (T/2 in Table 1)

Tables A1 and A2 below are the same as Tables 1 and 2 in the text, except that state-ordered reciprocal-compensation rates for local traffic for Florida and Mississippi have been used instead of interstate access tariffs to estimate the cost of the various network elements. The results differ rather significantly in some cases, since the prices of the various network elements are from two to three times as high for interstate traffic as they are for local traffic, but our qualitative conclusions regarding comparisons among various compensation arrangements remain unchanged.

[15] Subsidies are even greater to the extent that the ILEC must pay for the CLEC's supposed "tandem-switching capability." In reality the tandem switching capability does not correspond to any economic productivity beyond that considered in the analysis.

Table A1

Intercarrier Compensation under Various Regimes in Florida (Cents per Minute)		
Call Direction	CLEC-ILEC	ILEC-CLEC
Intercarrier Compensation	CLEC to ILEC	ILEC to CLEC
Subsidy-Free Regime	0.170330	0.037614
Existing Regime	0.170330	0.140240
DeGraba Proposal	0.077310	0.047220
Atkinson-Barnakov Proposal	(0.023610)	0.023610
BellSouth proposal	0.000000	0.000000
Subsidies (ILEC to CLEC)		
Existing Regime	0.0000	0.1026
DeGraba Proposal	0.0930	0.0096
Atkinson-Barnakov Proposal	0.1939	(0.0140)
BellSouth Proposal	0.1703	(0.0376)

Table A2

Intercarrier Compensation under Various Regimes in Mississippi (Cents per Minute)		
Call Direction	CLEC-ILEC	ILEC-CLEC
Intercarrier Compensation	CLEC to ILEC	ILEC to CLEC
Subsidy-Free Regime	0.193695	(0.015637)
Existing Regime	0.193695	0.166800
DeGraba Proposal	0.074905	0.048010
Atkinson-Barnakov Proposal	(0.024005)	0.024005
BellSouth proposal	0.000000	0.000000
Subsidies (ILEC to CLEC)		
Existing Regime	0.0000	0.1824
DeGraba Proposal	0.1188	0.0636
Atkinson-Barnakov Proposal	0.2177	0.0396
BellSouth Proposal	0.1937	0.0156