WORLDCOM

# DSL Broadband Access Over Evolving ILEC Networks

June 18, 2002

# Worldcom OnNet DSL Network

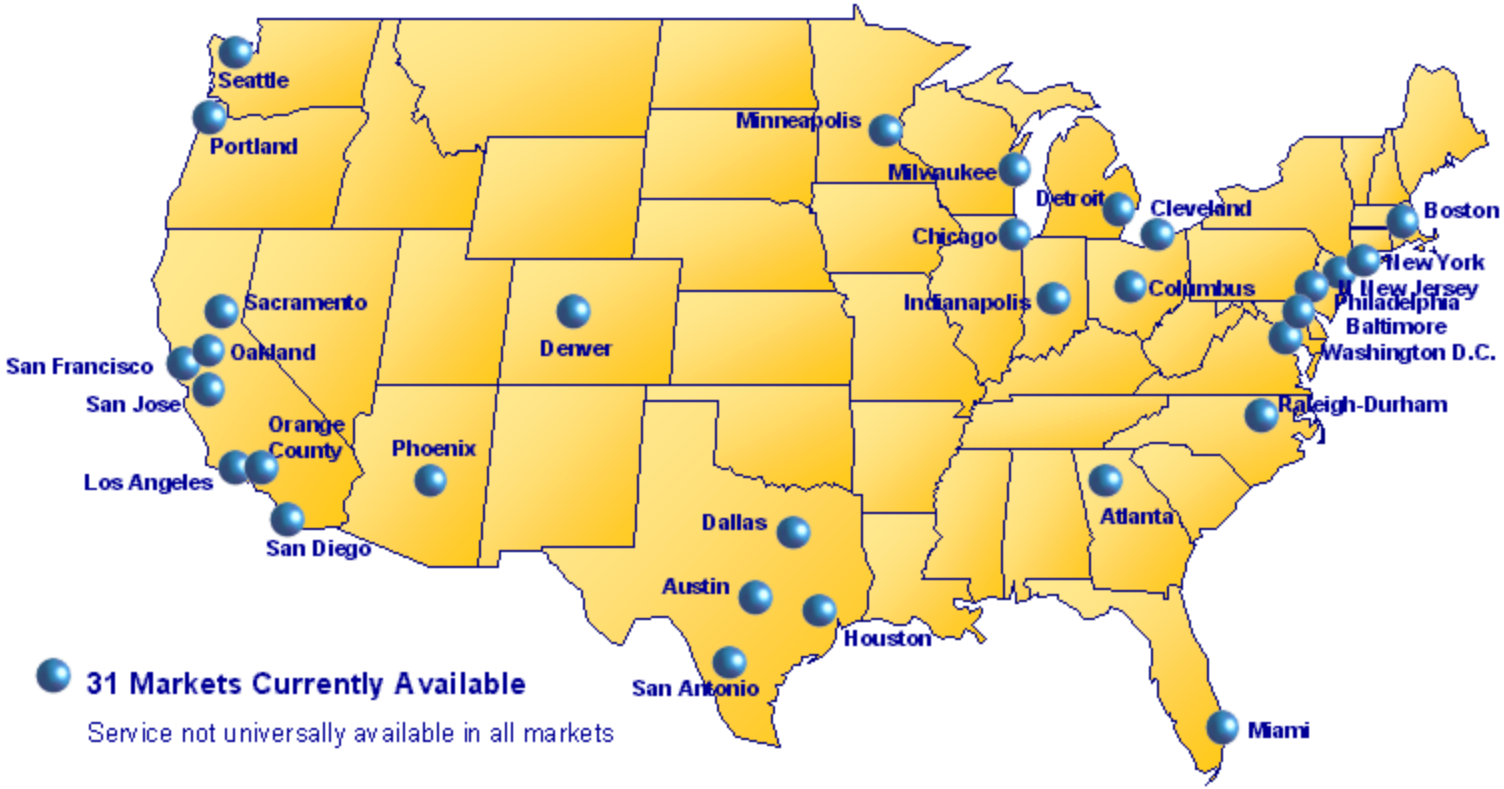

# WorldCom DSL Products - Businesses & ISPs

WORLDCOM

- **BUSINESS:**
  - **Internet DSL Solo—Line Shared Business Grade**
    - Individual single-user business Internet access for Teleworkers, Telecommuters, Power Users (asymmetric DSL)
  - **Internet DSL Office—xDSL Loop Business Grade**
    - Multi-user business Internet access for Home Office, Small Office, Branch Offices (symmetric DSL)
  - **Enterprise DSL—xDSL Loop Business**
    - Designed for businesses to link various locations and access to WCOM's Frame, ATM and IP networks (symmetric DSL)
- **ISPs:**
  - **DSL access with and without IP—Line Shared**
    - ISP end users are both business and residential

# WCOM DSL Products Depend on UNEs

WORLDCOM

- Today, WorldCom's DSL Offerings rely on:
  - xDSL-capable UNE Loops
  - Line Sharing
  - UNE Transport (several hundred COs)
  - OSS
- WorldCom cannot serve growing customer base without:
  - Line splitting (growing % of businesses and consumers)
  - Access to fiber-fed loops (about 30-40% of lines) as UNEs
  - Access to all features, functions, and QoS classes of fiber-fed loops

# WCOM DSL Requirements From ILECs

WORLDCOM

- **UNEs, not "wholesale services"**
  - TELRIC pricing
  - End-to-end all-copper loops
  - End-to-end fiber-fed loops
    - Access to all features, functions, and QoS classes currently enabled by ILECs
    - Access to all features, functions, and QoS classes supported by equipment and OSS vendors, whether or not currently enabled by ILECs
- **Line Sharing and Line Splitting on all-copper loops and fiber-fed loops**
- **Equal access to OSS**
- **Collocation**

# State PUCs Are Requiring Unbundling of Fiber-Fed Loops

WORLDCOM

- Leading state PUCs are requiring unbundling and line sharing as a UNE on fiber-fed NGDLC loops
  - New York
  - Texas
  - Illinois
  - Wisconsin
- Several state proceedings are pending, and more will be opened soon, to address terms, conditions, and TELRIC-based prices

# Line Sharing/Line Splitting on All-Copper Loops

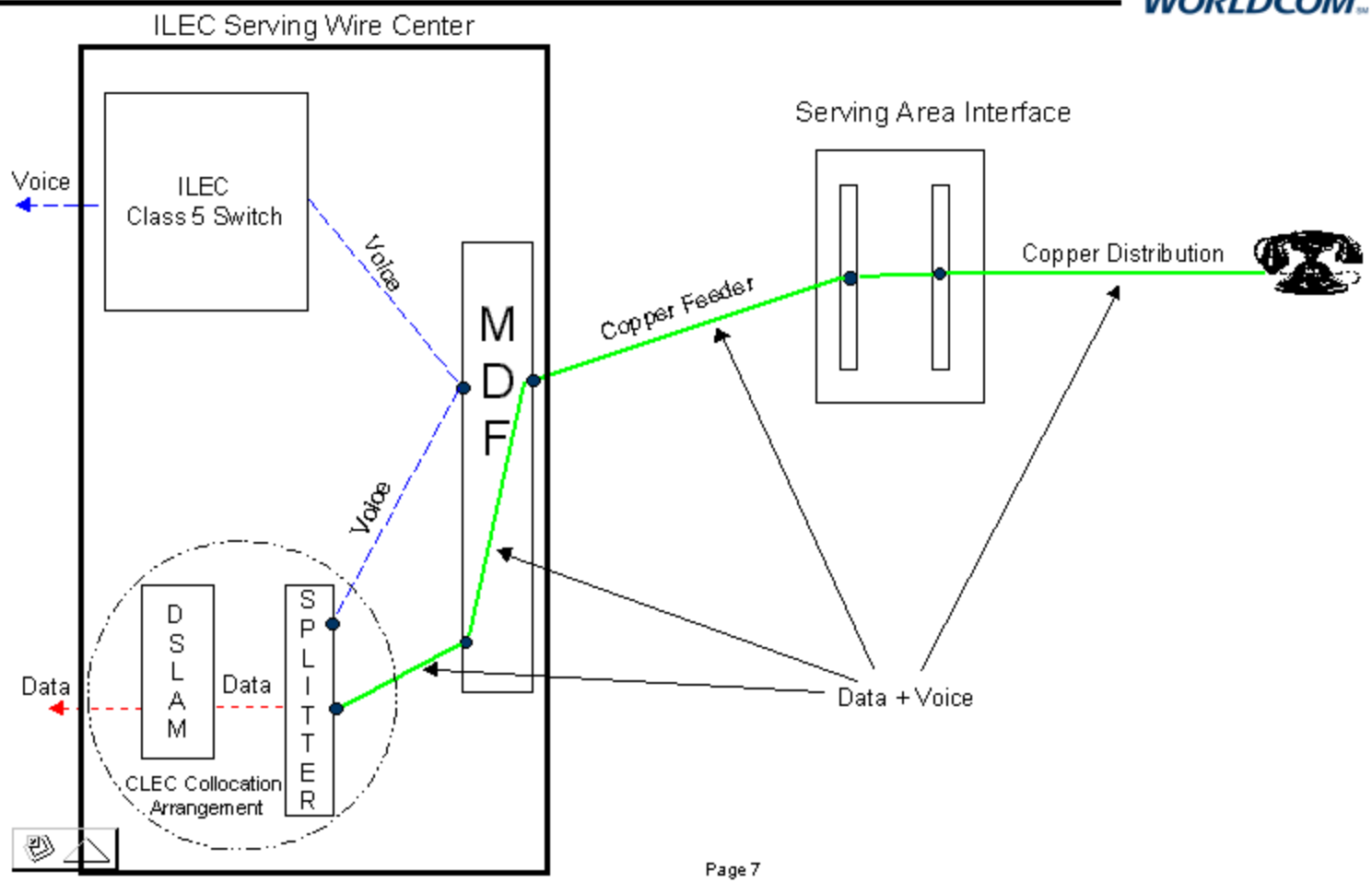

# UNEs/Line Sharing/Line Splitting on Fiber-Fed DLC Loops (SBC Project Pronto/Verizon PARTS)

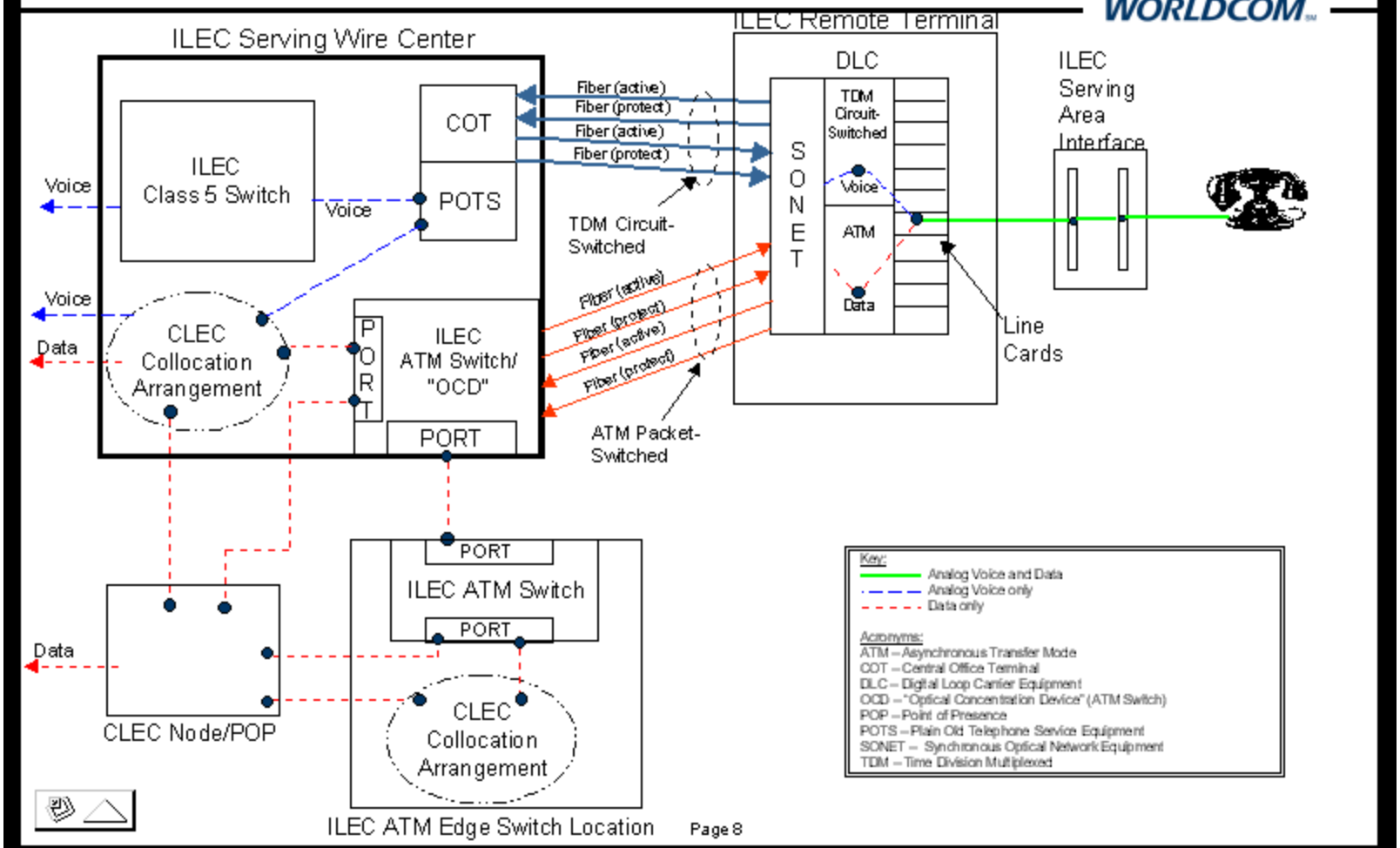

# Types of DSL on Fiber-Fed NGDLC Loops

WORLDCOM

- **Currently available from ILECs**
  - IDSL
  - ADSL (UBR and very small 96 kbps CBR PVCs only)
- **Currently supported by ILECs' equipment vendors (e.g., Alcatel), but not available from ILECs**
  - ADSL (CBR PVCs limited only by total throughput of DSL circuit (e.g., 1 Mbps); fiber transport capacity from RT to CO not an issue
  - HDSL2 (1.5 Mbps symmetric on one copper pair to premises)
  - G.SHDSL (2.3 Mbps symmetric on one copper pair to premises)

# ATM Quality of Service (QoS) Classes

WORLDCOM

- Permanent Virtual Circuit Types (PVCs) and Permanent Virtual Paths (PVPs) are already established by Industry Forums
- Unspecified Bit Rate (UBR) PVC
  - "Best efforts" transport
  - Useful for internet access only
- Constant Bit Rate (CBR) PVC
  - Committed bandwidth
  - Useful for voice over DSL
- Variable Bit Rate (VBR) PVC
  - NGDLC vendors are considering
  - Real-time and non-real-time versions are specified by Forums
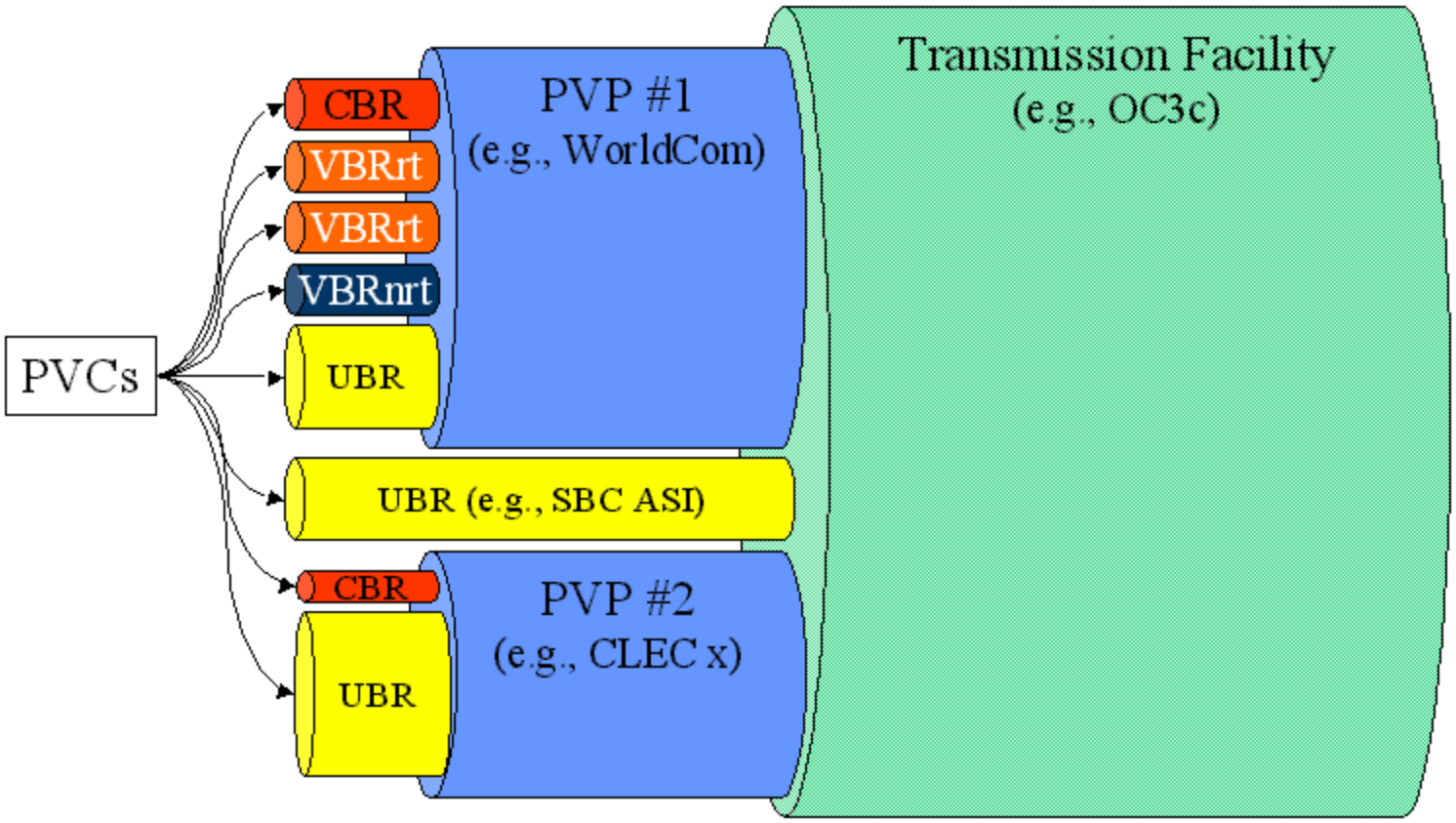
# Permanent Virtual Path (PVP) Provisioning