ORIGINAL

BELLSOUTH

EX PARTE OR LATE FILED

BellSouth Corporation
Suite 900
1133-21st Street, N.W.
Washington, DC 20036-3351

kathleen.levitz@bellsouth.com

Kathleen B. Levitz
Vice President-Federal Regulatory

202 463 4113
Fax 202 463 4198

June 28, 2002

RECEIVED

JUN 28 2002

FEDERAL COMMUNICATIONS COMMISSION
OFFICE OF THE SECRETARY

Ms Marlene H. Dortch
Secretary
Federal Communications Commission
The Portals
445 12th Street, S.W.
Washington, D.C. 20554

Re: WC Docket No. 02-150

Dear Ms Dortch:

This is to inform you that on June 26 and June 27, 2002, BellSouth made a series of presentations and demonstrations relating to its Operation Support Systems and the performance metrics that measure BellSouth's success in making those systems available to CLECs on a non-discriminatory basis to Greg Cooke, Aaron Goldberger, Bill Kehoe, Pam Slipakoff, and Gina Spade of the Wireline Competition Bureau's Competition Policy Division. The presentations, made at the staff's request, included a demonstration of BellSouth's Telecommunications Access Gateway, or TAG; tours of the Atlanta Local Carrier Service Center, the Atlanta Customer Wholesale Interconnection Services Center, and BellSouth's Courtland Street Wire Center in Atlanta. The tours were interspersed with presentations describing the operation of BellSouth's electronic pre-ordering and ordering OSS, the operations of the LCSC, the provisioning and maintenance and repair functions performed at the CWINS centers, the metrics and related reports documenting BellSouth's performance in making OSS available to CLECs on a non-discriminatory basis, and the manner in which BellSouth provides collocation to CLECs. The attached documents formed the basis for the presentations. The FCC staff also listened to the afternoon session of the monthly Change Control Process teleconference on June 26 for about one hour.

Participating in the demonstrations and presentations on behalf of BellSouth on both days were: Ann Haymons; Steve Inman; Janet Miller Fields; Ron Pate; Ken

No. of Copies rec'd 0+2
List ABCDE

Ainsworth; and I. During the tour of the LCSC, Sherrie Boyd, Tabitha Wilkes, and Shirley Oldham explained the operations of the UNE group within the LCSC; Vanessa Reid, Janet Blair and Kameka Fuller explained the operations of the Resale Group; Sabina Brisendine demonstrated the tasks done in the Complex Group. Diane Strickland, Kevin Carnes and Chanelle Davis explained the overall operation of the centers. At the CWINS Center, Bill Stacy; Jim Argo; and Brandon Hartley led the tour and explained the roles of the different work groups within the Center. Keith Milner and Jack Bible led the tour of the Courtland Street wire center.

In accordance with Section 1.1206, I am filing two copies of this and request that you place it in the record of the proceeding identified above. Thank you.

Sincerely,

Kathleen B. Levitz

Attachments

cc: Greg Cooke w/o attachments
Aaron Goldberger w/o attachments
Bill Kehoe w/o attachments
Pam Slipakoff w/o attachments
Gina Spade w/o attachments
Susan Pié
James Davis-Smith

Attachment 1

Operations Support Systems
BellSouth Telecommunications
June 26, 2002

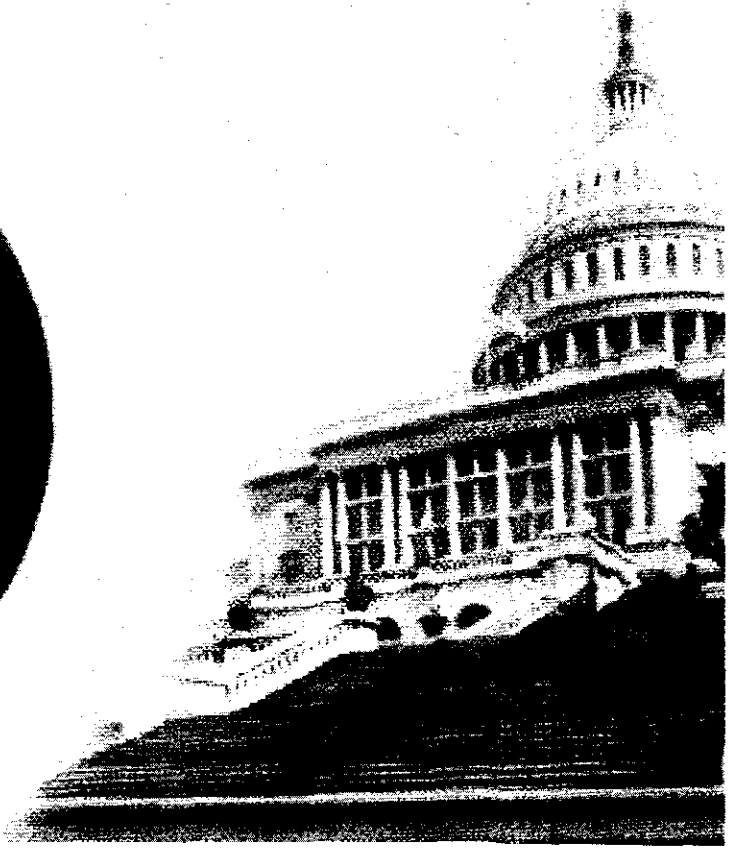

Telecom Act of 1996:
Three Ways for Competitors to Enter Local Market

What FCC says about non-discriminatory access:		What it *means*:
1. Provide facilities-based competitors with "interconnection equal in quality"	→	Competitors build their own local networks and plug into BellSouth
2. Provide UNEs "under terms and conditions that would provide an efficient competitor with a meaningful opportunity to compete"	→	Competitors put parts of their network together with parts of BellSouth's network
3. Provide resold services "in substantially the same time and manner"	→	Competitors get discounted BellSouth service, rename it and bill it to their customers

Operating Support Systems "OSS"

What are they?

- Computer-based systems, information, databases and personnel that BellSouth uses to perform customer and business support functions.

What does the Telecom Act and the FCC's Orders Require?

Non-discriminatory access to support system functions for network elements and resale services for:

- **Pre-Ordering**
- **Ordering**
- **Provisioning**
- **Maintenance & Repair**
- **Billing**

Non-discriminatory access to the information these systems contain.

PRE-ORDERING

- ***Customer Service Record***
  - ***Listed name***
  - ***Listed Address***
  - ***Products and Services***
  - ***Billing Address***
- ***Address Validation***
- ***Telephone Number Selection and Reservation***
- ***Available Products and Services***
- ***Service Delivery Date Calculation***
- ***Loop Qualification Information***

ORDERING

- ***Submission of order - Local Service Request (LSR)***
- ***Electronic / Manual order submission***
- ***Firm Order Confirmation (FOC)***
- ***Service Delivery Date***

PROVISIONING

- ***Processing of order for service delivery***
- ***Availability of network infrastructure***
- ***Continual Order Status***
- ***Confirmation of Service Delivery***

MAINTENANCE & REPAIR

- ***Don't Let It Break***
- ***When It Does, Fix It***
- ***Real-time Diagnostic Tests***
- ***Trouble Screening for Probable Cause***
- ***Dispatch Repair Technicians***

BILLING

- ***Accurate Bill***
- ***Timely Bill***
- ***Usage Details***

Electronic Interfaces

- **Three Options for Electronic Order Submission**

  TAG *(Industry Standard)*

  EDI *(Industry Standard)*

  LENS

LSR Process Flow

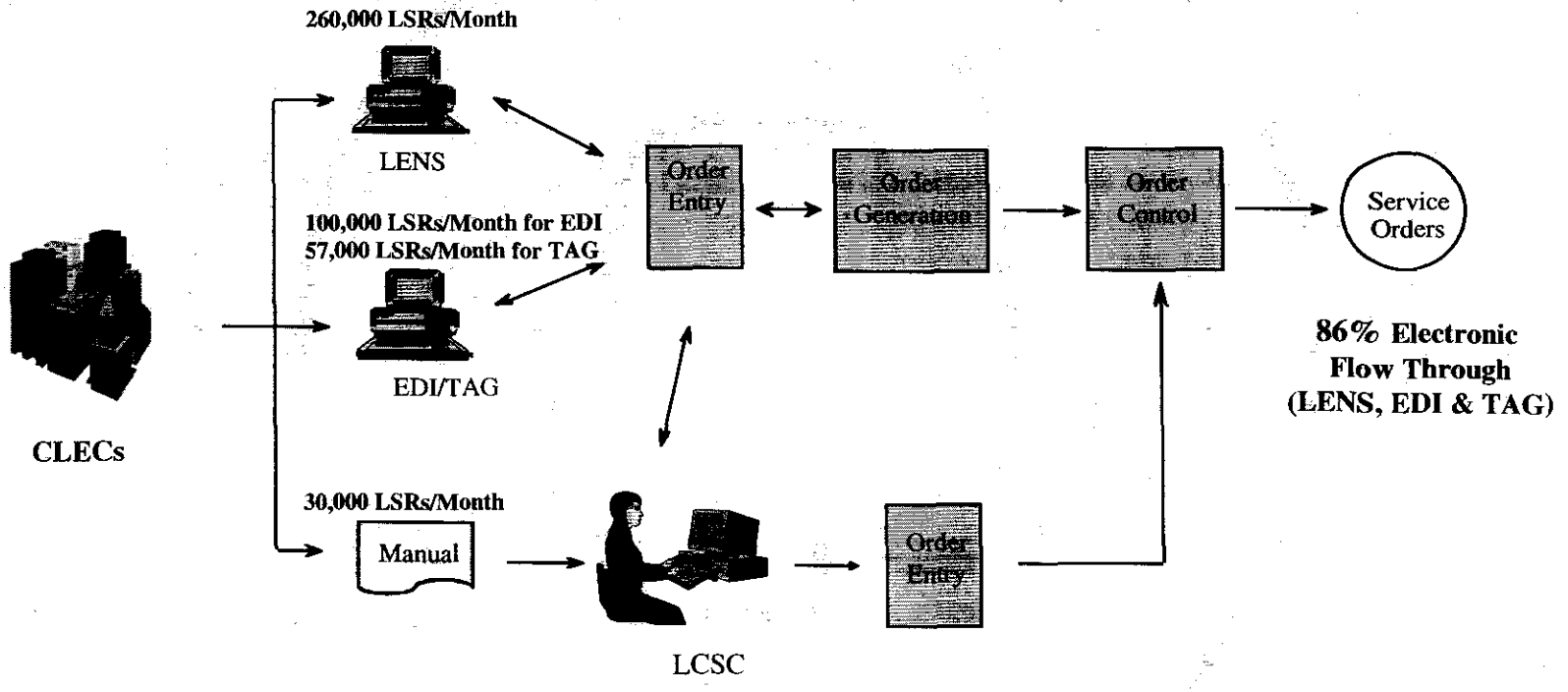

Note: All figures presented above are based on January through April 2002 data.

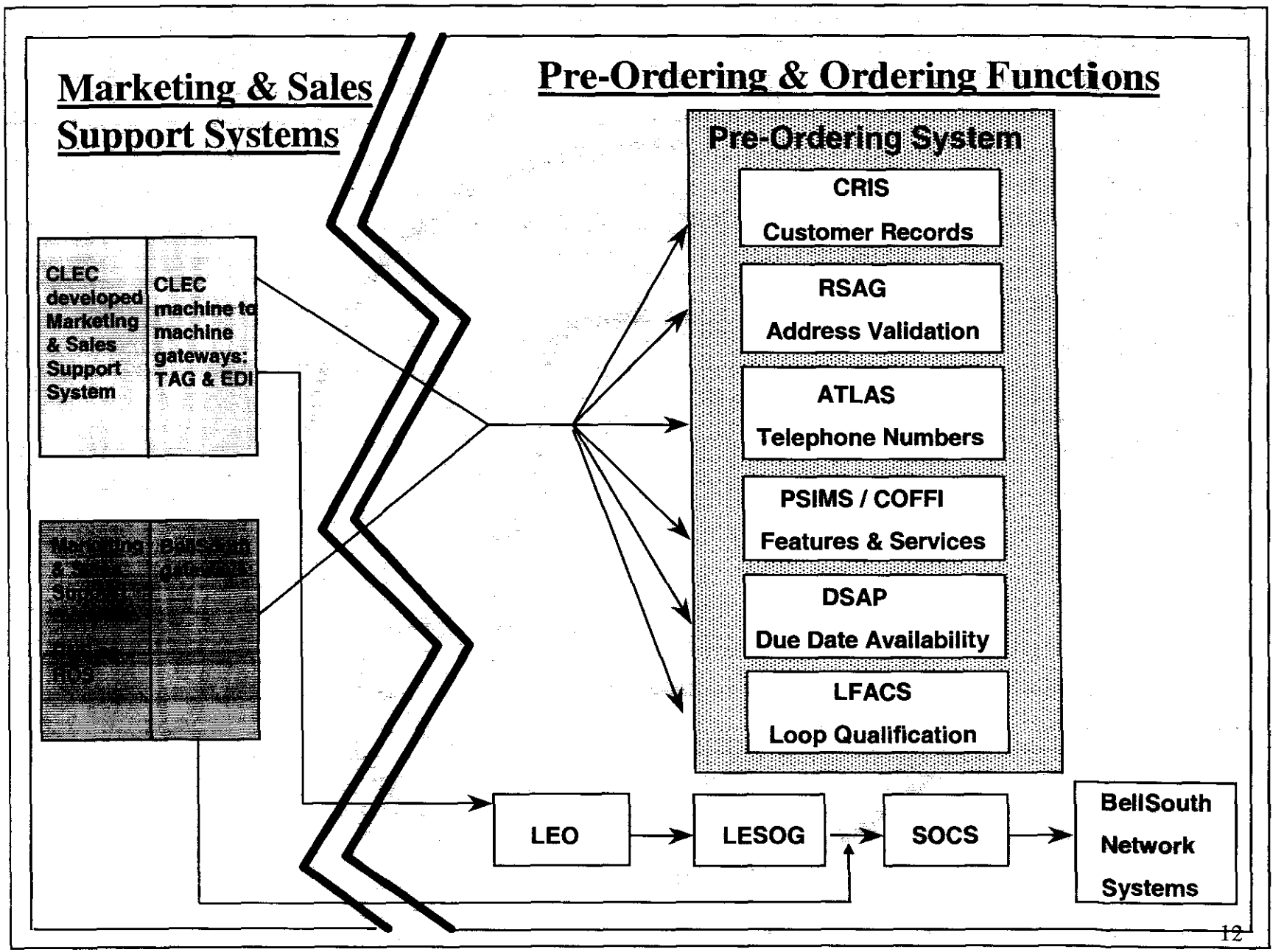
Marketing & Sales Support Systems
Pre-Ordering & Ordering Functions
Pre-Ordering System
CRIS
Customer Records
RSAG
Address Validation
ATLAS
Telephone Numbers
PSIMS / COFFI
Features & Services
DSAP
Due Date Availability
LFACS
Loop Qualification
CLEC developed Marketing & Sales Support System
CLEC machine to machine gateways: TAG & EDI
LEO
LESOG
SOCS
BellSouth Network Systems

Process Flow for Provisioning (Non-Designed Circuits)

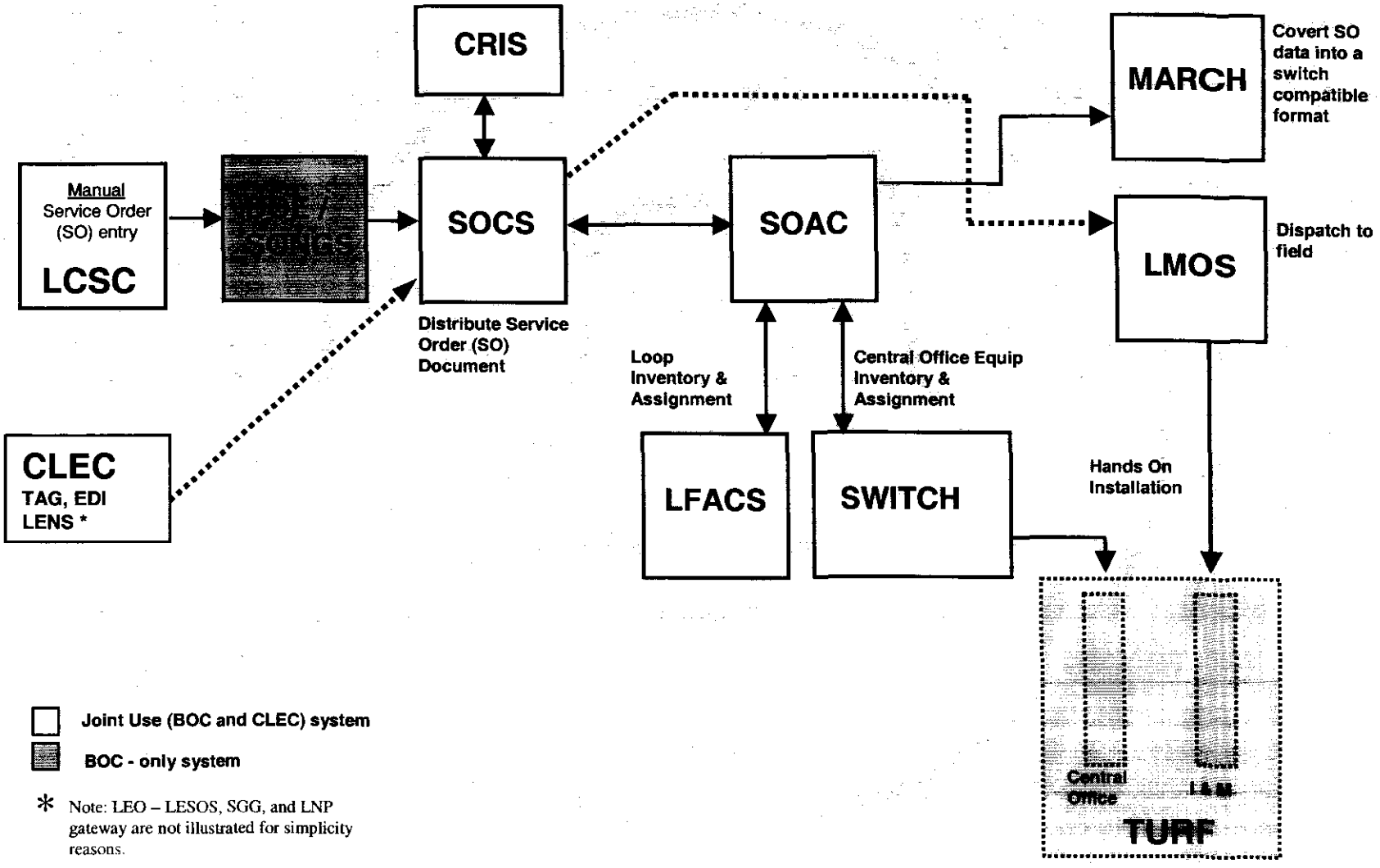

* Note: LEO – LESOS, SGG, and LNP gateway are not illustrated for simplicity reasons.

Maintenance & Repair

- *Trouble Analysis Facilitation Interface (TAFI)*
  - *Same system used by BellSouth*
  - *Identify, Analyze, & Test maintenance activity on own customers*
- *Electronic Communication Trouble Administration (ECTA)*
  - *Machine-to-Machine Trouble Ticket Submission*
  - *Industry Standard*

CLEC OSS Access

- Trouble Reporting & Testing

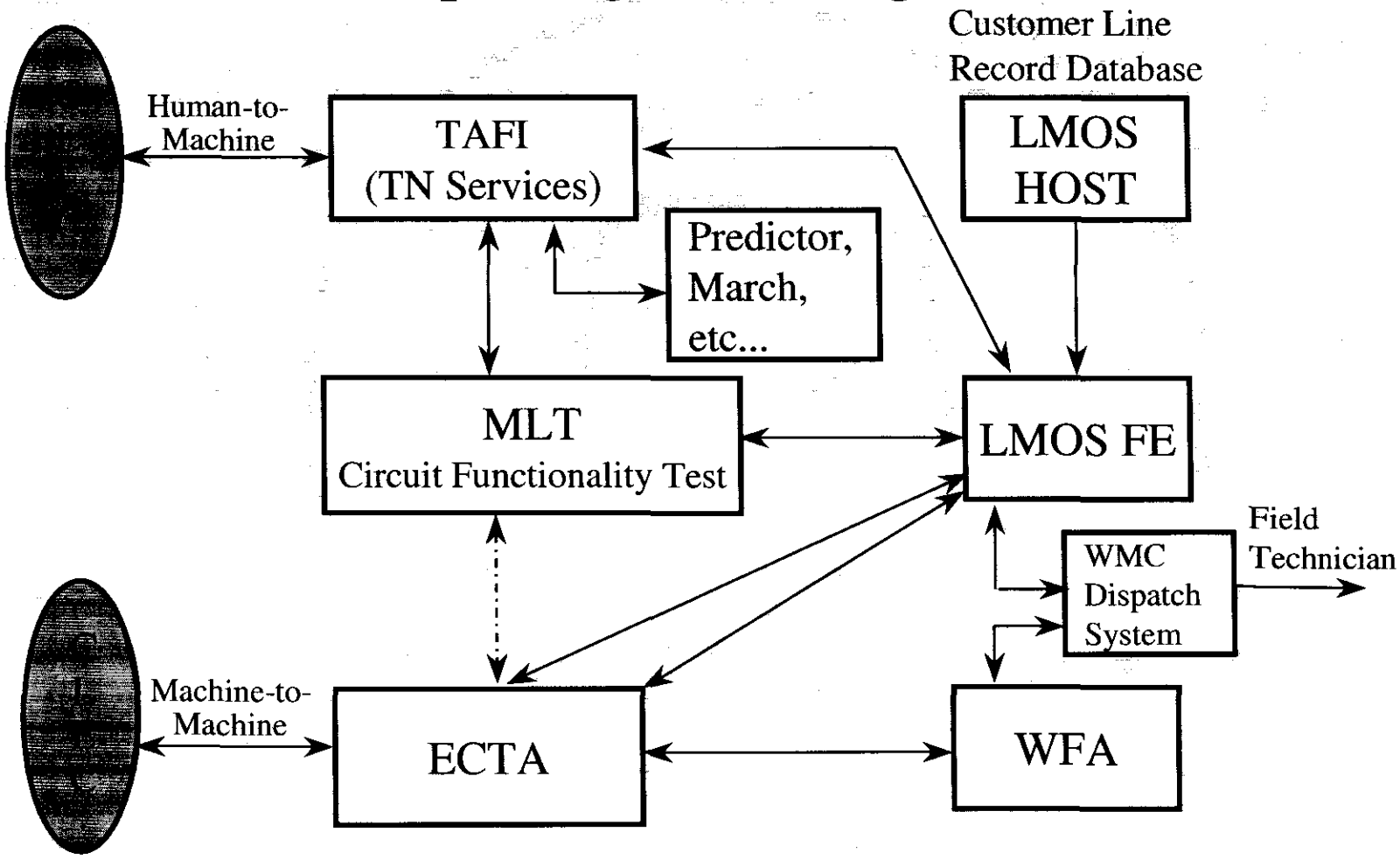

Billing Products

Billing Systems

- CRIS
  - Resale Bill Production
  - CSR Maintenance for Non-Designed UNEs (Some Loops, Ports, Loop + Port Combos)
  - Unbundled Bill Production (AL, KY, NC, SC, TN)*
- Integrated Billing Solution (FL, GA, LA, MS)*
  - Unbundled Port Usage Processing
  - Unbundled Bill Production(Non-Designed UNEs (Some Loops, Ports, Loop + Port Combos)

Billing Systems (cont.)

- **BellSouth Industrial Billing System (BIBS) (AL, KY, NC, SC, TN)***
  - **Unbundled Port Usage Processing**
- **CABS**
  - **Designed UNEs**
  - **Local Interconnection**
  - **Reciprocal Compensation**
  - **Collocation**

* IBS will be implemented in the entire BellSouth region by August 3, 2002

Billing Daily Usage Files (DUF)

- Available for account types:
  - Resale
  - Number Portability
  - Unbundled Network Elements (UNE)
- Provides Billable Call Detail Records (Local and Access)
- Aids In Fraud Detection
- Helps Track Credit Limit Thresholds Of End Users
- Industry Developed Format
  - Conforms to EMI (Exchange Message Interface) Specifications

ELECTRONIC INTERFACE DEMONSTRATION

TELECOMMUNICATIONS ACCESS GATEWAY (TAG)

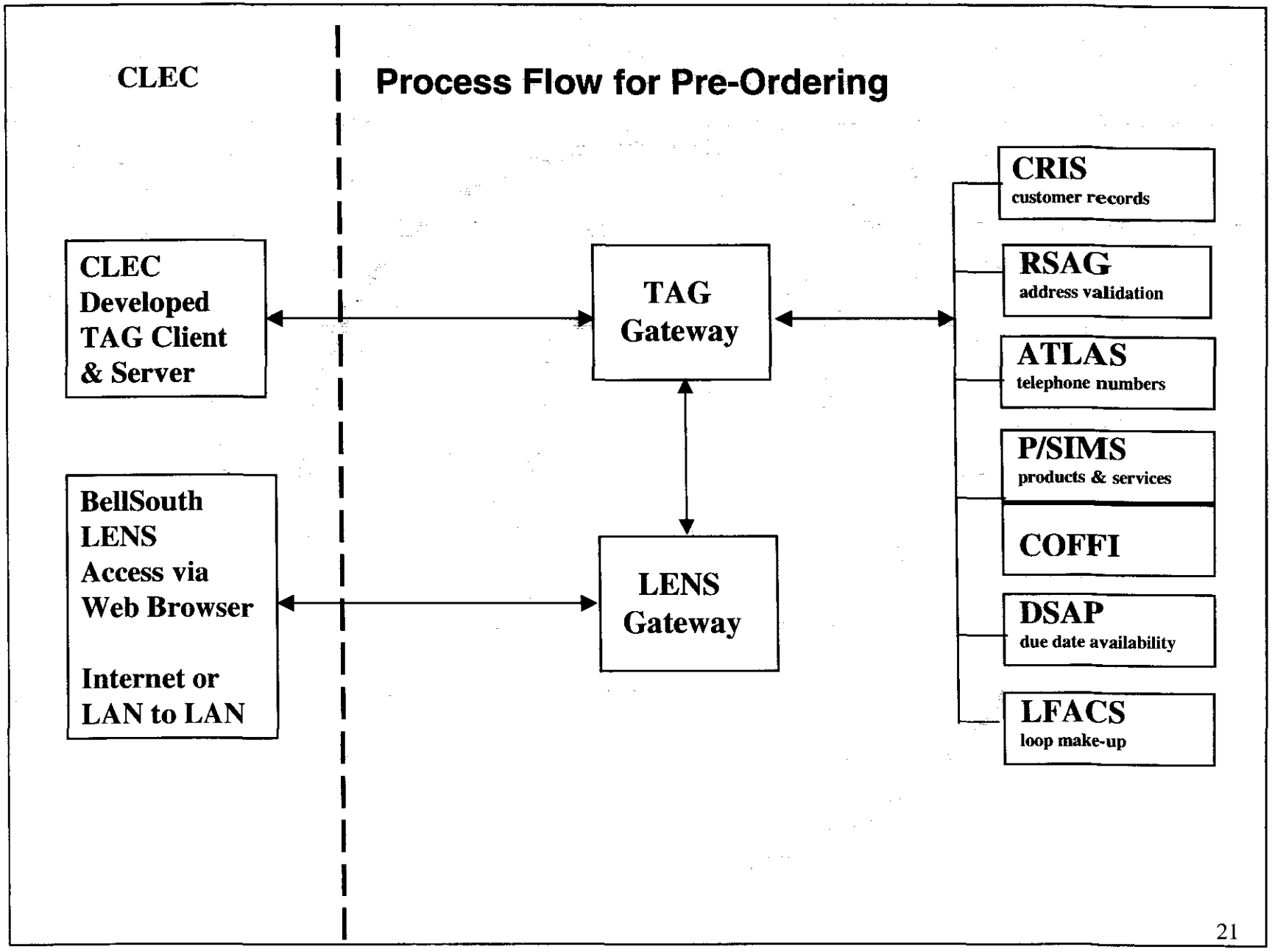
CLEC
Process Flow for Pre-Ordering
CLEC Developed TAG Client & Server
BellSouth LENS Access via Web Browser
Internet or LAN to LAN
TAG Gateway
LENS Gateway
CRIS
customer records
RSAG
address validation
ATLAS
telephone numbers
P/SIMS
products & services
COFFI
DSAP
due date availability
LFACS
loop make-up

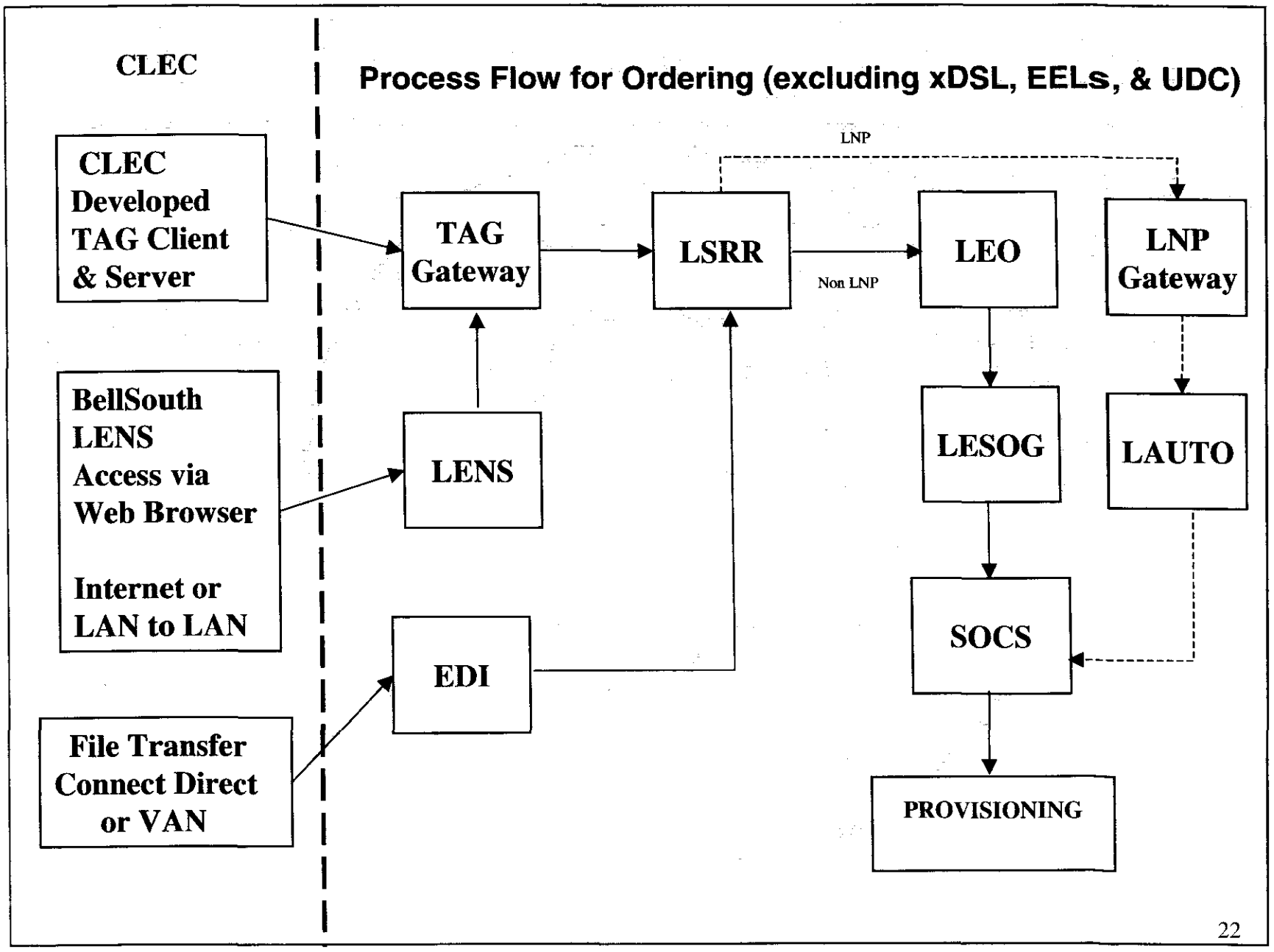
CLEC
Process Flow for Ordering (excluding xDSL, EELs, & UDC)
CLEC Developed TAG Client & Server
BellSouth LENS Access via Web Browser
Internet or LAN to LAN
File Transfer Connect Direct or VAN
TAG Gateway
LENS
EDI
LSRR
LNP
Non LNP
LEO
LNP Gateway
LESOG
LAUTO
SOCS
PROVISIONING

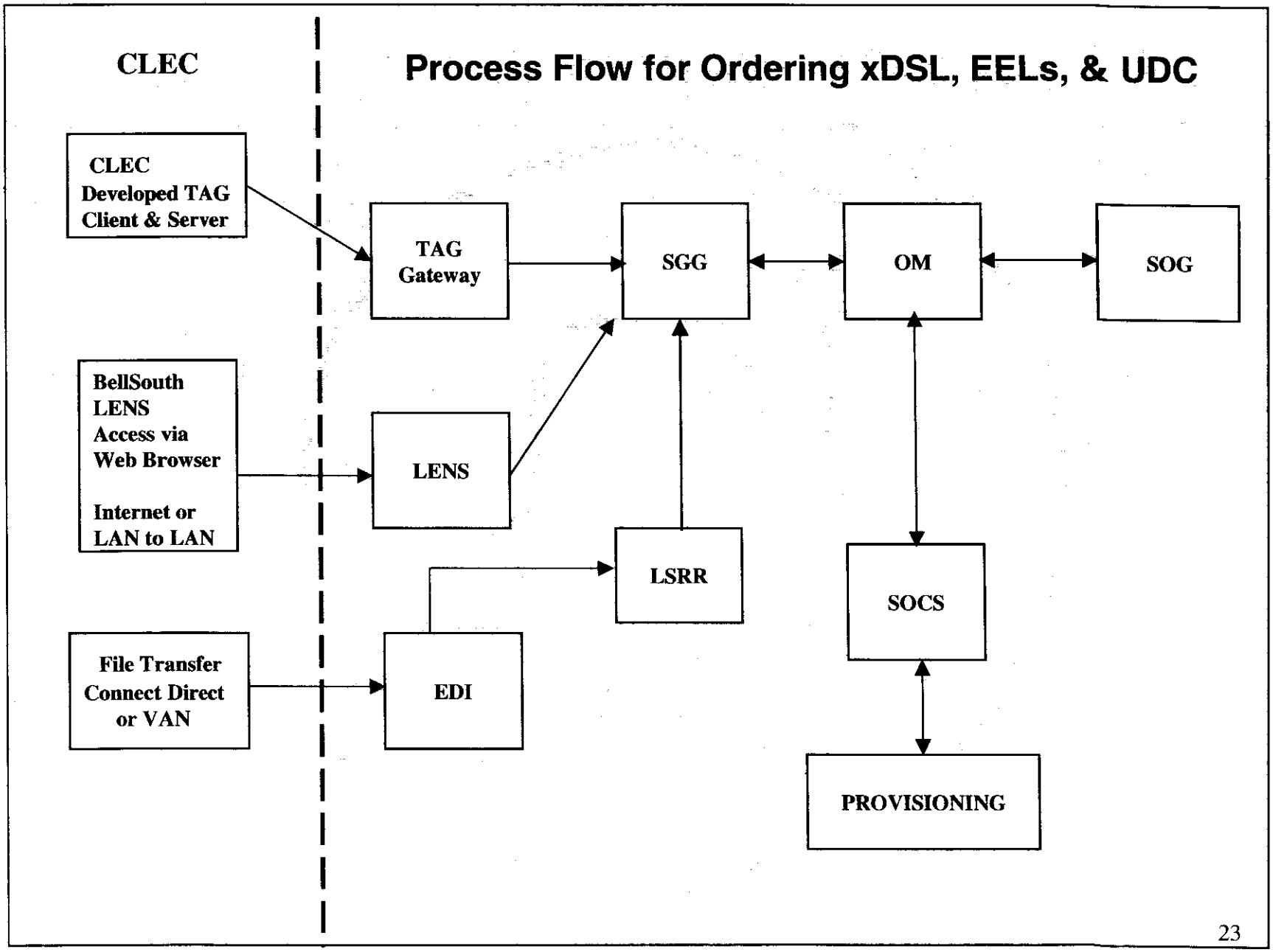
CLEC
Process Flow for Ordering xDSL, EELs, & UDC
CLEC Developed TAG Client & Server
TAG Gateway
SGG
OM
SOG
BellSouth LENS Access via Web Browser
Internet or LAN to LAN
LENS
LSRR
SOCS
File Transfer Connect Direct or VAN
EDI
PROVISIONING

Summary

BellSouth's interfaces provide CLECs with access to the Operating Support Systems for required functions and information in substantially the same time and manner as BellSouth's access for its retail customers.

This access provides efficient CLECs with meaningful opportunities to compete using unbundled network elements.

This access provides facilities based CLECs with interconnection "equal in quality" to BellSouth's own network.

BellSouth Telecommunications Operations Support Systems

TAG Demonstration

June 26, 2002

Section I

General Introduction

General Introduction:

This presentation has been prepared to illustrate BellSouth's OSS for:

- Pre-ordering
- Ordering
- Provisioning

The format of this document will describe the processing of an xDSL, LNP, non-LNP service request for services such as basic resale and UNE-P starting with Pre-ordering, then Ordering and finally Provisioning. The process steps provide:

1. A high level flow of actions required to advance the pre-ordering transaction and order to the next step.
2. Appendix A to illustrate the process flows using block diagrams.
3. Appendix B to illustrate screen captures of service request for UNE-P conversion as specified using a BellSouth developed interface that uses the Telecommunications Access Gateway (TAG) for pre-ordering and ordering.
3. Appendix C provides an acronym glossary along with definitions.

BellSouth provides Competitive Local Exchange Carriers (CLECs) non-discriminatory access to its Operational Support Systems (OSS) for pre-ordering, ordering, and provisioning via three electronic interfaces. For pre-ordering, ordering, and provisioning BellSouth provides the Telecommunications Access Gateway (TAG) and the Local Exchange Navigation System (LENS). Additionally, for ordering and provisioning BellSouth also offers the Electronic Data Interexchange (EDI) interface.

As noted above, BellSouth provides the machine-to-machine interface, EDI, for CLECs for ordering and provisioning. In other words, EDI is not used to access BellSouth's pre-ordering OSS. EDI follows the industry standard protocol (EDI) for ordering and the industry standard Ordering and Billing Forum (OBF) guidelines for Local Service Requests (LSRs). EDI has been available since December 1996. There are several EDI connectivity options available: dedicated point-to-point connections; dial-up connections; and Value-Added Network (VAN) connections.

TAG is an application-to-application interface that provides a standard Application Programming Interface (API) to BellSouth's pre-ordering, ordering, and provisioning OSS. TAG is based on Common Object Request Broker Architecture (CORBA), which is the industry standard for pre-ordering. TAG follows the industry standard Order and Billing Forum (OBF) guidelines for Local Service Requests (LSRs). CLECs develop their own presentation layer graphical user interface (GUI). BellSouth made TAG available for pre-ordering in August 1998 and for ordering in November 1998.

BellSouth provides CLECs with all the specifications necessary for integrating pre-ordering and ordering functionality of the electronic interfaces. A CLEC may integrate pre-ordering and ordering by integrating TAG pre-ordering with the EDI ordering interface, or by integrating TAG pre-ordering with TAG ordering. Integratable interfaces allow CLECs to design the appearance and "feel" of their marketing and sales support systems to best suit their business needs. CLECs can use information obtained via the electronic interfaces to build their own databases, such as databases of their own local customer service records.

LENS is a web-based GUI. LENS requires software development only on BellSouth's side of the interface. BellSouth therefore is responsible for implementing any changes or new versions of the interface. LENS provides integrated pre-ordering and ordering in its firm order mode. In order to use LENS, a CLEC must have, at a minimum, a personal computer, web browser software, and an internet connection. LENS has been available since April 1997.

Instead of building an EDI or TAG interface and instead of performing the integration of the electronic interfaces with their own internal OSS themselves, CLECs may choose to use solutions developed by third-party companies. Albion International, Inc., Telcordia Technologies, Exceleron Software, Inc., and DSET Corporation, for example, have developed electronic interfaces to connect and integrate CLECs' systems with BellSouth's.

Section II

UNE-P

Pre-Ordering
Ordering
Provisioning

Please refer to the flowcharts in Appendix A for pictorial views of the pre-ordering (Figure 1), ordering (Figure 2 & 3), and provisioning (Figure 4) functions. Sample screen shots are provide in Appendix B. A glossary of terms is provided in Appendix C.

Electronic Pre Ordering (CLEC)	
Pre-ordering is defined as the steps needed to gather enough information to assist the CLEC in submitting an error free service request. These functions include: address validation, telephone number reservation, due date availability, products and services, and loop make-up. The CLEC service representative will use the BellSouth pre-ordering electronic interfaces (TAG and LENS) to perform these functions.	
Obtain Customer Records Information	With a new installation there would be no available customer information to preview. Thus, this step would not be utilized. However, for additions and/or changes to an existing account, the Customer Service Record (CSR) may be accessed from the Customer Record Information System (CRIS). With authorization from the end-user customer, the CLEC can submit a query to CRIS for the CSR. The CSR will provide the following information: telephone number or other account identification, listed name, listed address, directory listing information, directory delivery information, billing name, billing address, product and service information. A CLEC can access information on any BellSouth customer accounts or their own accounts. A CLEC cannot access any other CLEC's account or customer information. **On January 5, 2002, BellSouth implemented the functionality to offer the CSR in a parsed format. CLECs, however, may still receive the unparsed CSR stream of data, if they so choose.**

Validate Service Address	CLEC validates the complete and accurate service address against the Regional Street Address Guide (RSAG). CLEC initiates the address verification request to launch a query to RSAG and presents the results on-line.
Retrieve Telephone Number	CLEC reserves a telephone number from the Application for Telephone Number Load Administration and Selection (ATLAS) system. CLEC initiates a query to ATLAS. ATLAS returns a list of available telephone numbers to reserve and select. CLEC can reserve up to 25 telephone numbers.
Retrieve Available Products & Services	CLEC determines Products & Services availability. (For example, in LENS the CLEC is presented a combined table reflecting availability, English name, and USOC information about each feature in the switches of interest.) Information is extracted from the Product/Services Inventory Management System (P/SIMS) and the Central Office Features File Interface (COFFI). P/SIMS verifies the availability of a feature or service for the Central Office serving the end-user's address validated by RSAG. USOC information for features and services based on current tariffs is maintained in COFFI.

Calculate Due Date	CLEC requests an estimated due date via the pre-ordering interface. Information is extracted from the Distributed Support Application (DSAP). (DSAP contains available due dates and dates unavailable due to provisioning load, special events, or restricted serving areas, etc.) DSAP returns appropriate due dates for the products and services requested.

Loop Make Up	CLEC requests Loop Make Up information via the pre-ordering interface. Information is extracted from LFACS (Loop Facilities Assignment and Control System). LFACS returns the loop make up information for spare or working facilities at an address, including the composition of the loop material, the existence, location and type of any electronic or other equipment on the loop, including but not limited to, digital loop carrier or other remote concentration devices, feeder/distribution interfaces, bridge taps, load coils, pair-gain devices; the loop length, including the length and location of each type of transmission media; the wire gauge(s) of the loop; and the electrical parameters of the loop, which may determine the suitability of the loop for various technologies.

Electronic Ordering (CLEC)	
	Ordering is defined as the steps needed to successfully submit a complete and accurate local service request that flows into BellSouth's Service Order Communications System (SOCS). Systems that are downstream from SOCS are part of provisioning.
Submit Local Service Request	The CLEC service representative will use the information obtained during pre-ordering to construct a LSR and electronically submit utilizing one of the BellSouth ordering interfaces (TAG, EDI, or LENS). The LSR will be electronically transmitted to the Local Service Request Router (LSRR) or the ServiceGate Gateway (SGG). TAG and LENS sends xDSL, EELs and UDC orders to the SGG and all others to the LSRR. EDI sends all orders to the LSRR. The LSRR will route xDSL, EELs and UDC orders to the SGG for EDI. LSRR routes LNP request to the LNP gateway, and all remaining orders to LEO for processing.
Non – xDSL, EELs, & UDC Non – LNP request	LEO performs edit checks and data formatting to ensure complete and accurate LSR entries. If the request passes the edit and formatting checks, LEO will pass the service requests to Local Exchange Service Order Generator (LESOG). LESOG will format the service request into Bellsouth service order record format and pass to SOCS.

LNP request	The LSRR will send Local Number Portability (LNP) orders to the LNP gateway to retrieve information related to the LNP requests. LNP gateway sends the requests to LNP Automation (LAUTO) to format the service request into BellSouth service order record format and hands to SOCS.

xDSL, EELs & UDC request	xDSL, EELs and UDC request are sent to the ServiceGate Gateway (SGG) from TAG and LENS. Requests sent via EDI are first routed to the LSRR which forwards the request to SGG. The SGG performs edit checks for request received from EDI. TAG and LENS performs edit checks before sending the order to the SGG. The SGG then formats the request and sends it to Order Manager (OM). OM provides the centralized coordination point for retrieving and acting on the data from the supporting OSSs. OM sends the request to the Service Order Generator (SOG). SOG formats the service request into BellSouth service order record format and sends it back to OM for forwarding to SOCS.

Service Order Communications System (SOCS)	The BellSouth OS which maintains and routes service order images to the various BellSouth systems during the provisioning process. **It is important to note that SOCS is the common point of entry into the BellSouth OSS for provisioning of service requests by both the BellSouth retail units and the CLECs.**

Electronic Provisioning (CLEC or BellSouth Retail Request)
Provisioning is defined as the process that starts after a complete and accurate (error free) order is accepted by SOCS and until the service is installed and working properly.

Facility Assignment	SOCS electronically passes the order to the Service Order Analysis and Control (SOAC) system. SOAC controls the flow of the order to the appropriate downstream assignment OSS based on the type of order and the required facilities using BellSouth's codes contained in the service order image. For assignment of outside plant loop facilities, SOAC first routes the service order to the Loop Facilities Assignment and Control System (LFACS). LFACS utilizes the validated address from the service order and the loop inventory contained in the database to select and assign the appropriate facilities. LFACS will mechanically complete the loop facility assignment and pass this information back to SOAC. Next SOAC routes the order to the SWITCH system. SWITCH makes assignments on the main distribution frame in the central office. SWITCH issues a frame work order to the CO technician to perform appropriate cross connect wiring functions. SWITCH returns the assignment information to SOAC for entry into the assignment section of the service order. Once SOAC receives the completed assignment information from SWITCH, SOAC will route the order to MARCH. If the order requires software changes to be made in a BellSouth switching network element, MARCH will handle that function. If no switch recent changes are required, MARCH will simply list the order on a "no work" log for record keeping and historical data.

Customer Line Records	SOAC transmits a copy of the service order back to SOCS. SOCS routes a copy of the order image to the Loop Maintenance Operations System (LMOS). LMOS updates the record of service and assignments, which is referenced by other operations system and personnel during maintenance and repair activities over the life of the service.

Dispatch of Field Technician	LMOS initiates a dispatch of the field technician on the specified due date of the order, if appropriate. LMOS generates a work order to the Work Management Center (WMC) responsible for the Installation and Maintenance (I&M) to dispatch the field technician. The field technician conducts the physical work necessary to complete the order.

Completion	LMOS sends a completed order back to SOCS. SOCS sends the order to CRIS to begin the billing of the service.

Completion Notice (CLEC only)	If the LSR was electronically submitted via a CLEC interface, (TAG, EDI, or LENS), then SOCS sends a completion notice to the CLEC electronically as confirmation of completion of the service request. (For LENS the completion confirmation must be retrieved by the CLEC service representative.)

Appendix A

Process Flows For:

Pre-Ordering
Ordering
Provisioning

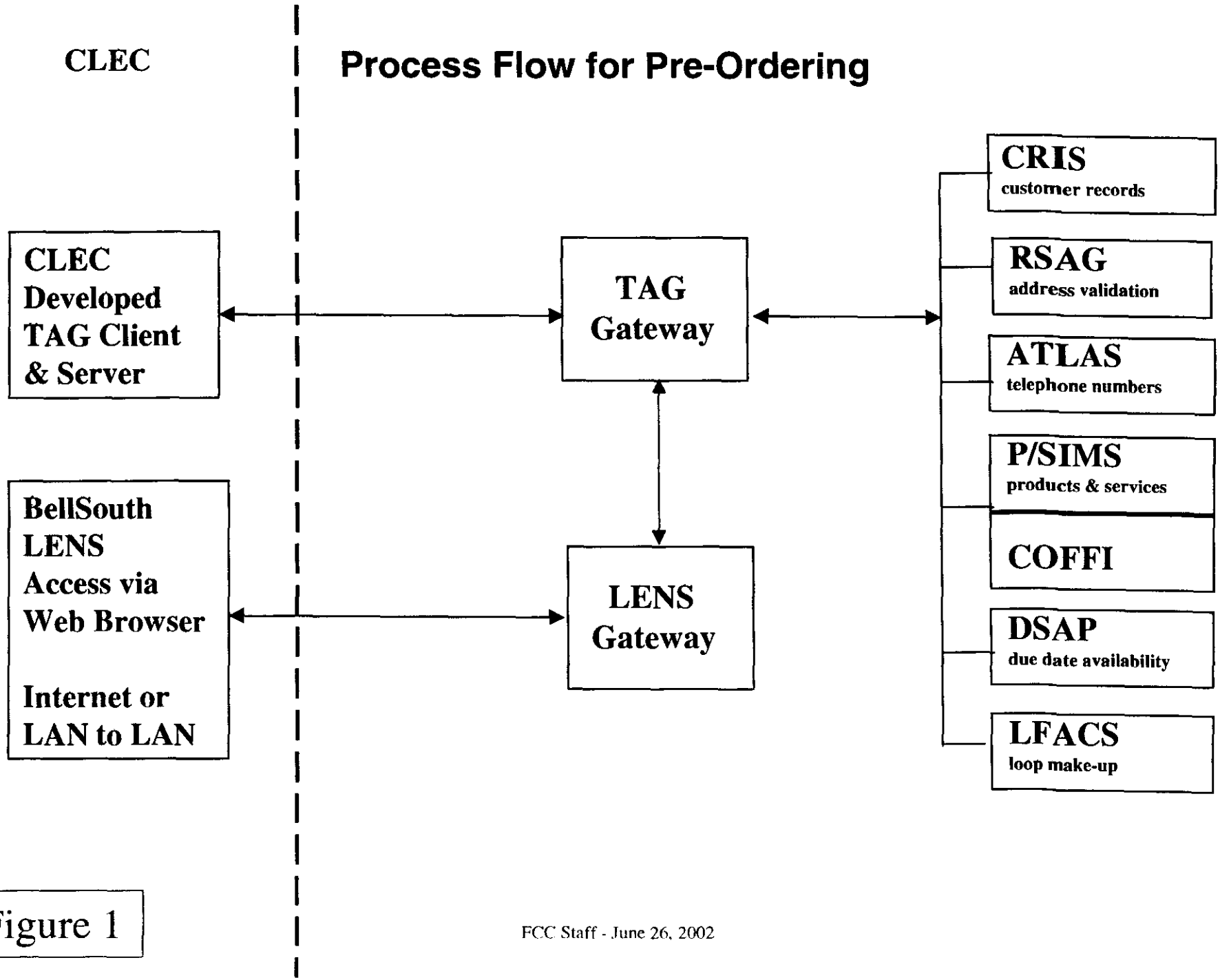

Figure 1

FCC Staff - June 26, 2002

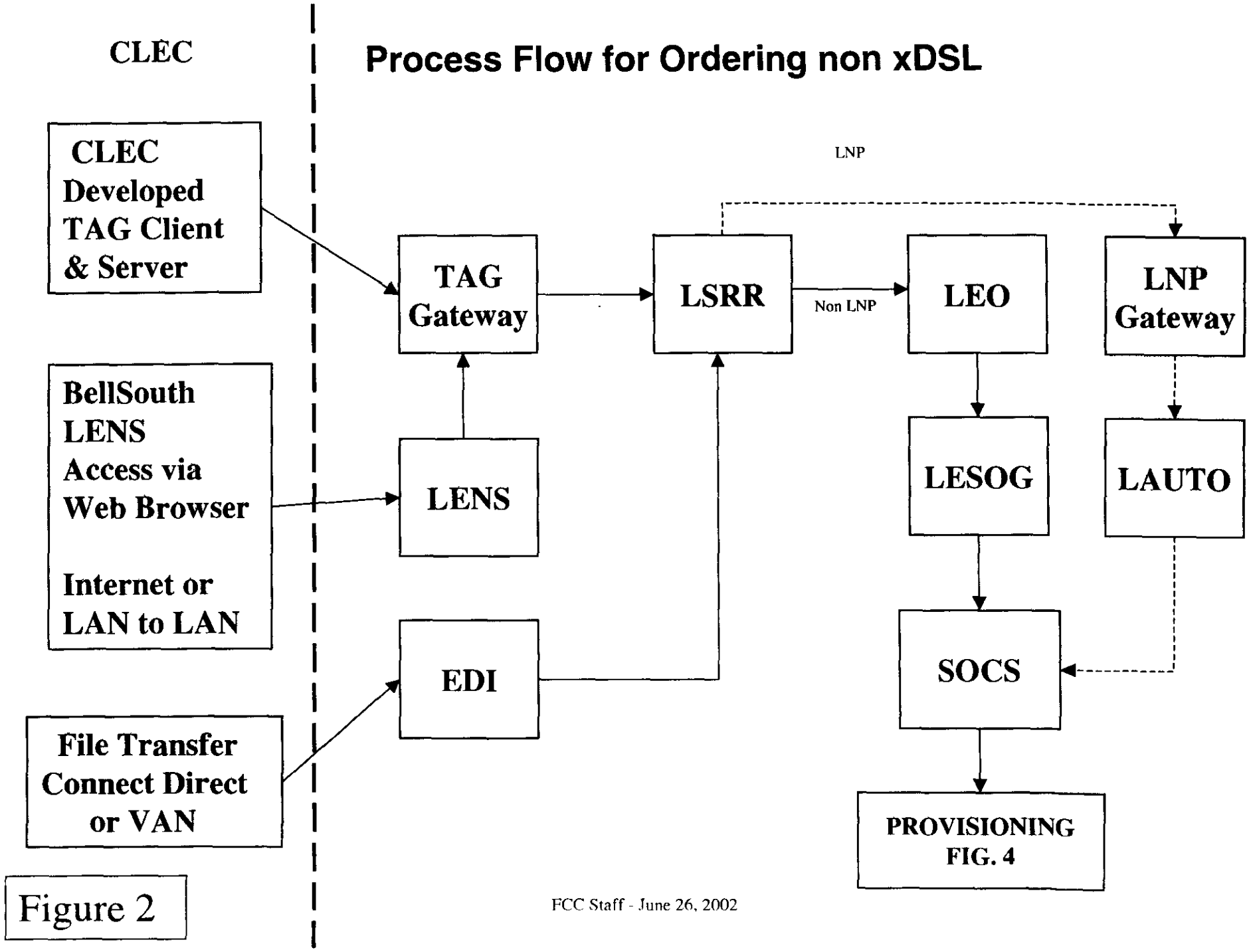

Figure 2

FCC Staff - June 26, 2002

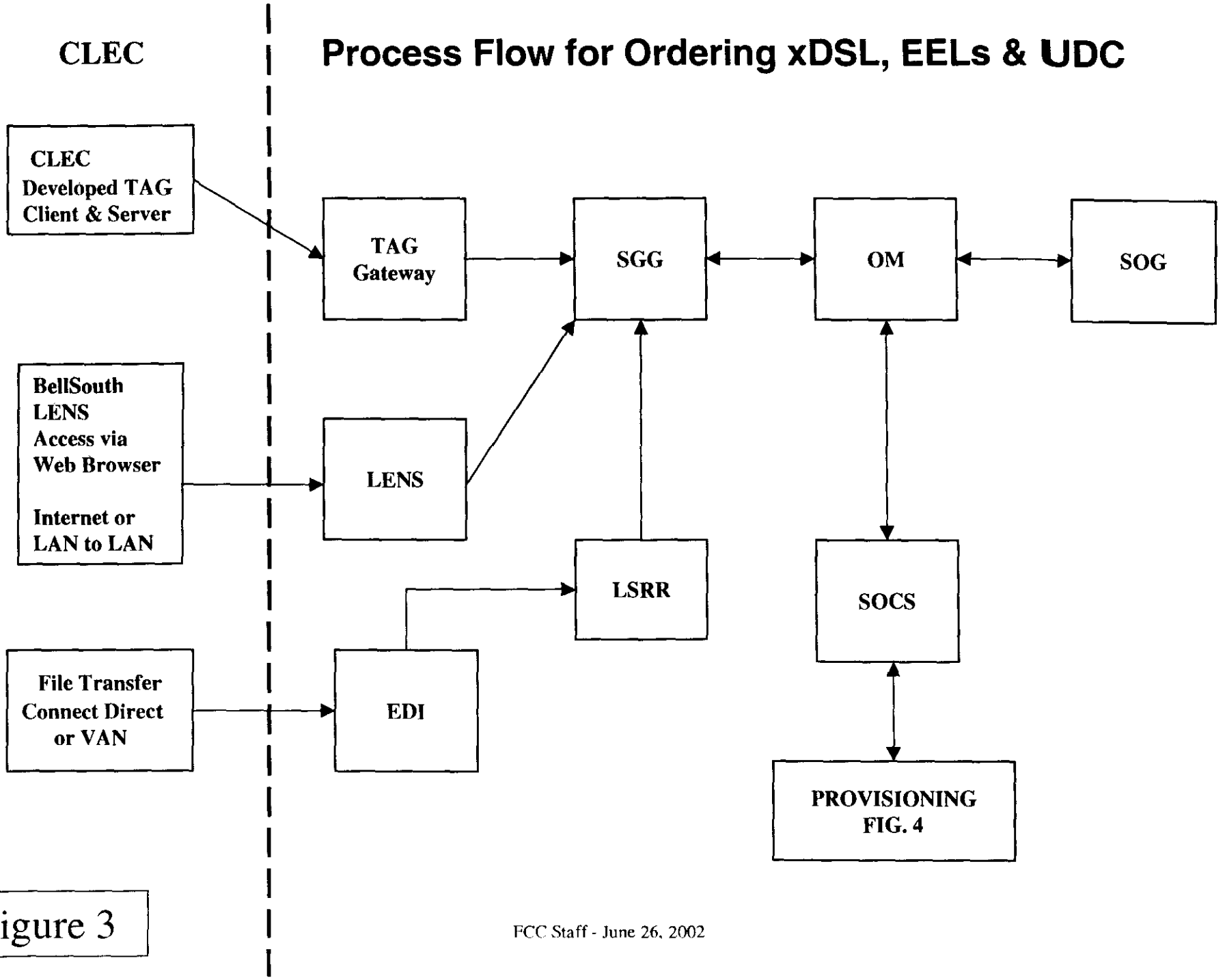

Figure 3

FCC Staff - June 26, 2002

Process Flow for Provisioning (Non-Designed Circuits)

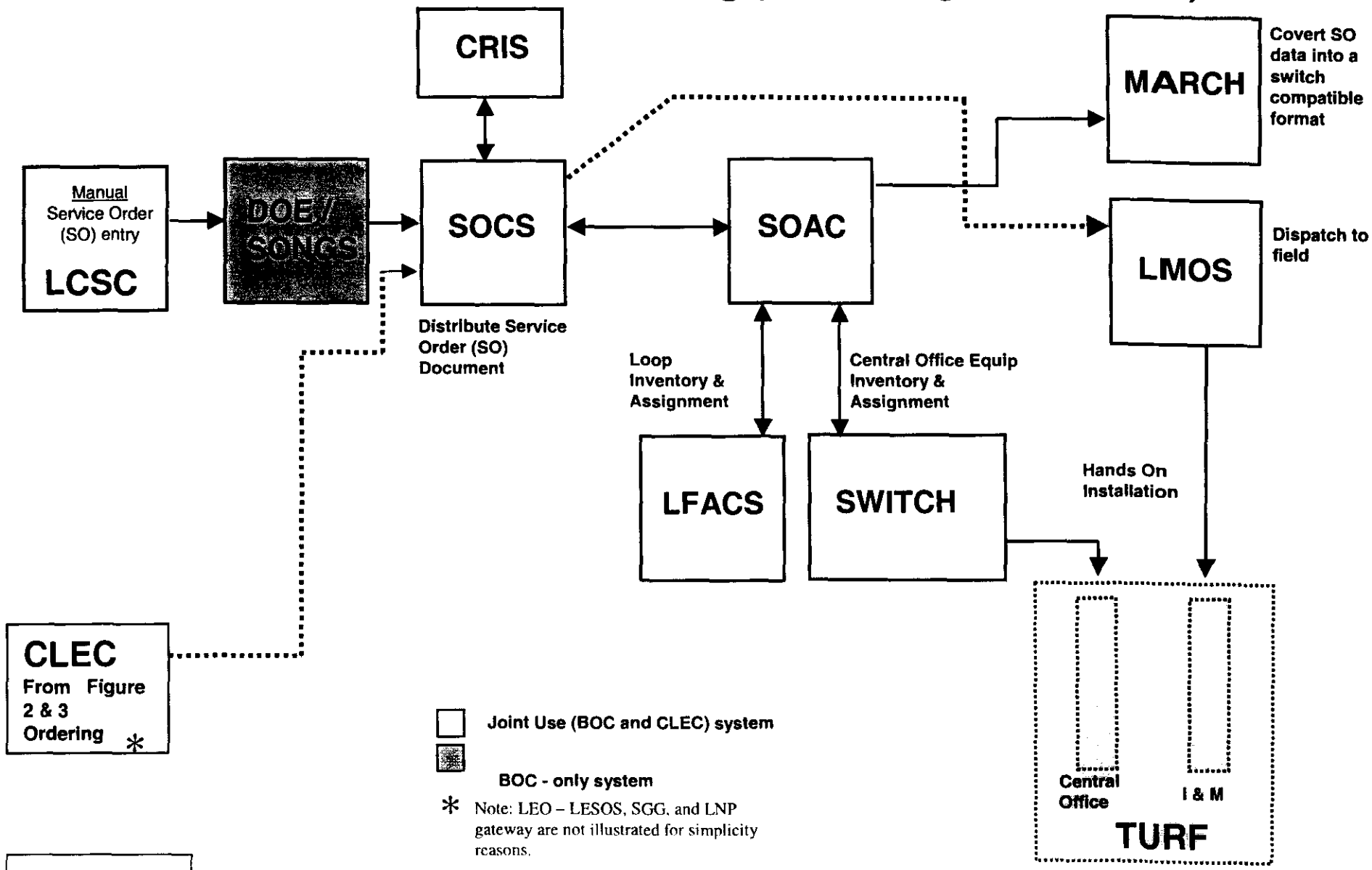

Figure 4

FCC Staff - June 26, 2002

Appendix B

Screen Captures:

Ordering UNE-P Conversion as Specified via TAG

Logon on to the system

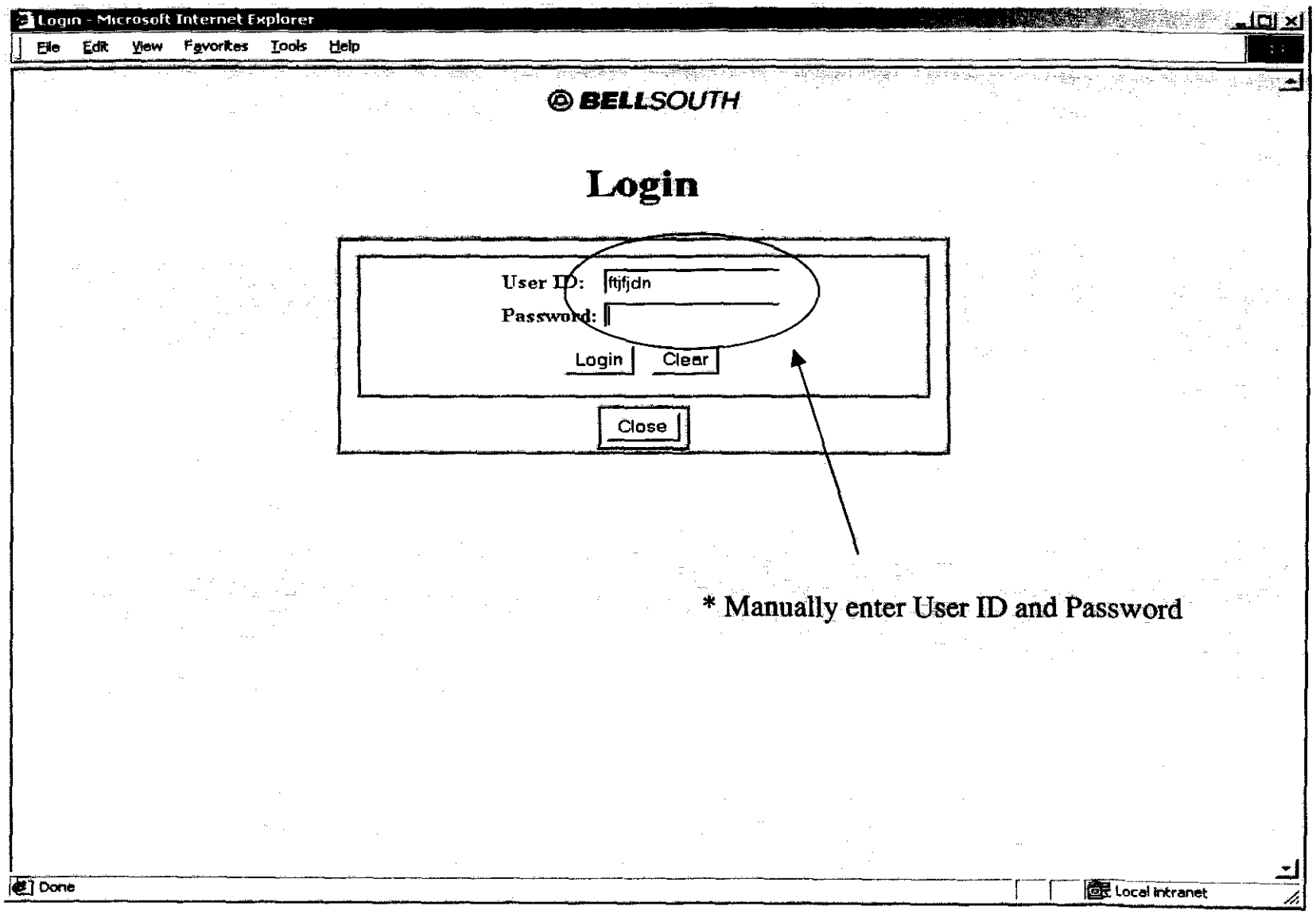

After successful log on, you will arrive at the "Customer Profile" screen

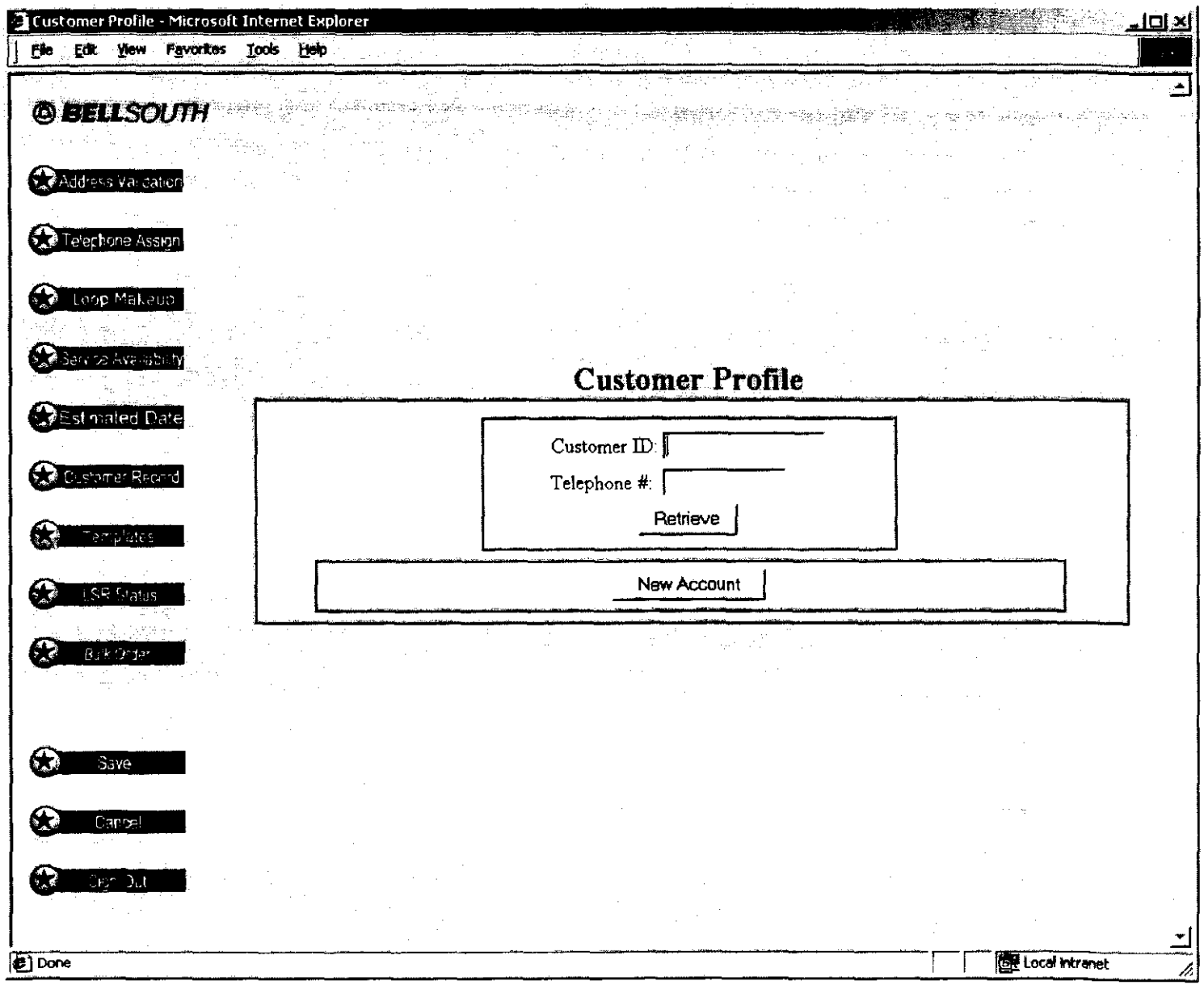

Find the customer profile

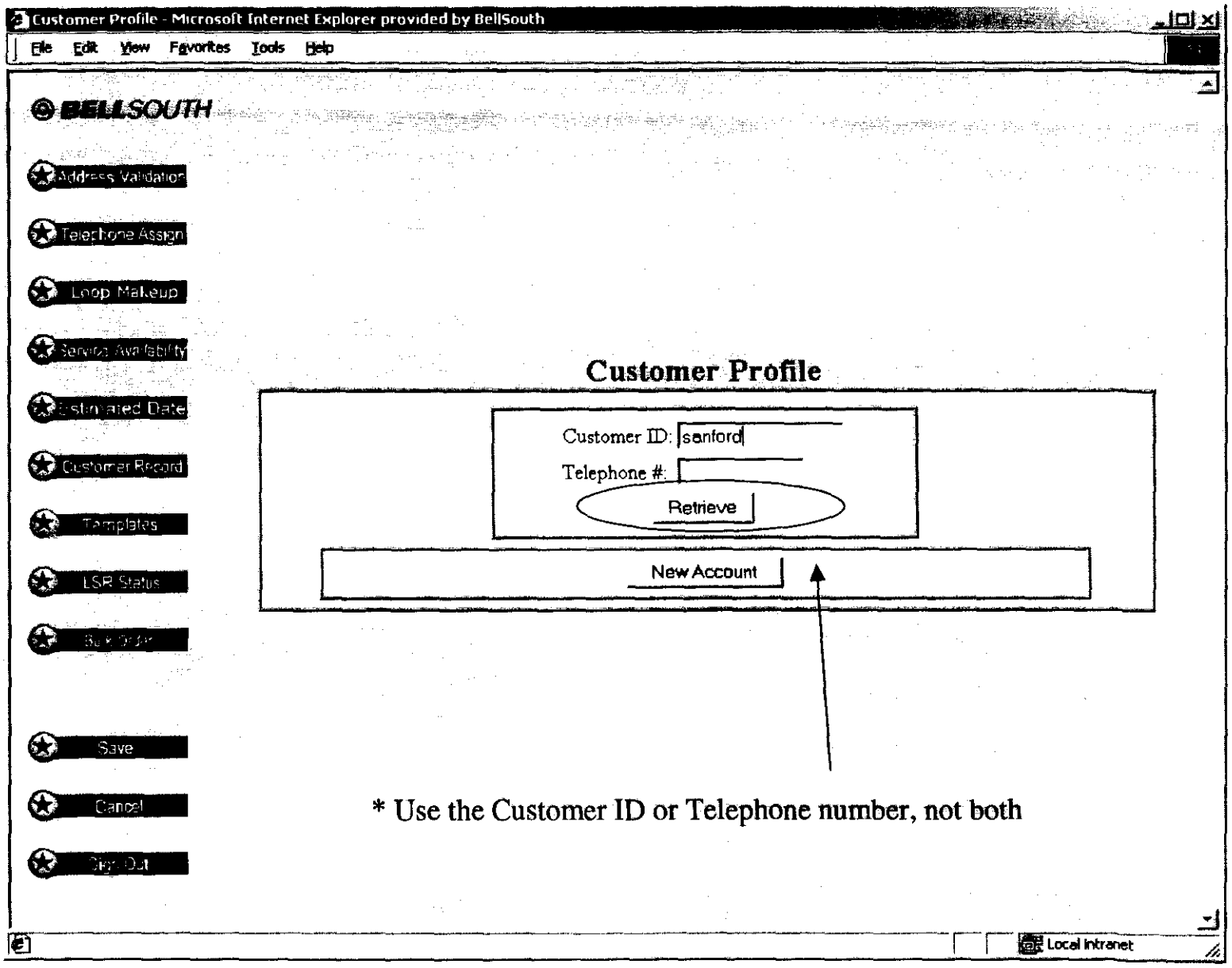

This is the result of the Customer Profile search

Customer Profile - Microsoft Internet Explorer

File Edit View Favorites Tools Help

BELLSOUTH

Customer Profile

Address Validation
Telephone Assign
Loop Makeup
Service Availability
Estimated Date
Customer Record
Templates
LSR Status
Bulk Order
Save
Cancel
Sign Out

Customer ID: senford
Telephone #: 7709431952
Cancel | New Account

Reserved Phone #s: Extend | Release
View CSR S&E Data

Type of Organization
Residential Business Government

Contact Name: Torrance Senford
End User Name: Use Contact Name Torrance Senford
Listing Name: Use Contact Name Torrance Senford
Contact Telephone #: Use Customer Telephone # 7709431952
Organization:

Service Address: [VALID]
Edit Service Address
1 CLEC TEST BED RD
AUS GA 30106

Billing Address:
Use Service Address
Edit Billing Address
1 CLEC TEST BED RD
AUS GA 30106

Request Type: Loop/Port
Use Template: <none>
Short Form
Customer LSR Status
Create LSR

Done
Local Intranet

Validate the Address

Click here

Customer Profile - Microsoft Internet Explorer

File Edit View Favorites Tools Help

BELLSOUTH

Customer Profile

Address Validation
Telephone Assign
Loop Makeup
Service Availability
Estimated Date
Customer Record
Templates
LSR Status
Back Order
Save
Cancel
Sign Out

Customer ID: sanford
Telephone #: 7709431952
Cancel | New Account

Reserved Phone #s: Extend | Release
View CSR S&E Data

Type of Organization
Residential Business Government

Contact Name: Torrance Sanford
End User Name: Use Contact Name Torrance Sanford
Listing Name: Use Contact Name Torrance Sanford
Contact Telephone #: Use Customer Telephone # 7709431952
Organization:

Service Address: [VALID]
Edit Service Address
1 CLEC TEST BED RD
AUS GA 30106

Billing Address:
Use Service Address
Edit Billing Address
1 CLEC TEST BED RD
AUS GA 30106

Request Type: Loop/Port
Use Template: <none>
Short Form
Customer LSR Status
Create LSR

Done
Local intranet

Arrive here

Address Validation - Microsoft Internet Explorer provided by BellSouth

Address Validation

Customer Name: Torrance Sanford Phone: 7709431952

Telephone #: 7709431952

Street Number: 1 (Number) (Suffix) ☐ Unnumbered House Indicator

Street: (Direction) CLEC TEST BED (Name) RD (Thoroughfare) (Suffix)

City: AUS **State:** GA Zip Code: 30106

Unit: (Type) (Value) Structure: (Type) (Value) Floor:

Postal Route: PO Box:

Descriptive Location:

Use Address As Is

OK Cancel Clear

Click here

Done Local intranet

Address Validation results

Address Validation Response - Microsoft Internet Explorer provided by BellSouth

Address Validation Response

Customer Name: Torrance Sanford Phone: 7709431952

Service Address is **VALIDATED**!

COMPLETED SUCCESSFULLY

1 CLEC TEST BED RD

AUS GA 30106
7709431952 WORKING
7709439923 WORKING
7709439920 WORKING
7709439826 WORKING
7709439741 WORKING
7709439385 WORKING
7709439143 WORKING
7709438934 WORKING
7709438831 WORKING
7709438721 WORKING
7709438618 WORKING
7709438594 WORKING
7709438346 WORKING
7709438054 WORKING
7709437573 WORKING
7709437177 WORKING

Done Local intranet

After clicking "done", you will return to the "Customer Profile" Screen

Customer Profile - Microsoft Internet Explorer provided by BellSouth

File Edit View Favorites Tools Help

BELLSOUTH

Address Validation
Telephone Assign
Loop Makeup
Service Availability
Estimated Date
Customer Record
Templates
LSR Status
Bulk Order
Save
Cancel
Sign Out

Customer Profile

Customer ID: sanford
Telephone #: 7709431952
Cancel | New Account

Reserved Phone #s: Extend | Release
View CSR S&E Data

Type of Organization
Residential Business Government

Contact Name: Torrance Sanford
End User Name: Use Contact Name Torrance Sanford
Listing Name: Use Contact Name Torrance Sanford
Contact Telephone #: Use Customer Telephone # 7709431952
Organization:

Service Address: [VALID]
Edit Service Address
1 CLEC TEST BED RD
AUS GA 30106

Billing Address:
Use Service Address
Edit Billing Address
1 CLEC TEST BED RD
AUS GA 30106

Request Type: DID Resale
Use Template: <none>
Short Form
Customer LSR Status
Create LSR

Click here

Local intranet

Create LSR, Order Initialization screen

Firm Order - Microsoft Internet Explorer provided by BellSouth

File Edit View Favorites Tools Help

Order Initialization

BELLSOUTH

Address Validation
Telephone Assign
Loop Makeup
Service Availability
Estimated Date
Customer Record
Templates
LSR Status
Bulk Order
Save
Cancel
Sign Out

Customer ID:	sanford	Customer Name:	Torrance Sanford
Request Type:	DID Resale	**Activity Type:**	
Purchase Order Number:	2002062409165000	**Company Code:**	
Organizational Type:	2 = Residential	**Line Quantity:**	B = Single-Line
		Rate Type:	- = Not Applicable

Form Selection: Order Initialization Line Selection: Select lines to include in order

Available Lines	Selected Lines
7709431952	

Add Remove

Add Loop

Next Screen Submit Order

Done Local intranet

Create a Conversion to LSP request type "Loop/Port". Select circled information.

Firm Order - Microsoft Internet Explorer provided by BellSouth

File Edit View Favorites Tools Help

Order Initialization

BELLSOUTH

Address Validation
Telephone Assign
Loop Makeup
Service Availability
Estimated Date
Customer Record
Templates
LSR Status
Bulk Order
Save
Cancel
Sign Out

Customer ID:	sanford	Customer Name:	Torrance Sanford
Request Type:	Loop/Port	**Activity Type:**	Conversion to LSP
Purchase Order Number:	2002062409165000	**Company Code:**	8001
Organizational Type:	2 = Residential	**Line Quantity:**	B = Single-Line
		Rate Type:	- = Not Applicable

Form Selection: Order Initialization Line Selection: Select lines to include in order

Available Lines	Selected Lines
	7709431952

Add phone #

Add Remove

Add Loop

Next Screen Submit Order

Click next

Local intranet

You will arrive at the Admin/Billing screen. We will establish the Due Date

Firm Order - Microsoft Internet Explorer provided by BellSouth

File Edit View Favorites Tools Help

Administration/Billing

BELLSOUTH

Address Validation
Telephone Assign
Loop Makeup
Service Availability
Estimated Date
Customer Record
Templates
LSR Status
Bulk Order
Save
Cancel
Sign Out

Customer ID:	sanford	Customer Name:	Torrance Sanford
Request Type:	Loop/Port	Activity Type:	Conversion to LSP
Purchase Order Number:	2002062409165000	Version:	0
Form Selection:	Administration/Billing	Company Code:	8001

Desired Due Date:	06/28/2002	Appointment Time:	
Desired Due Date Out:		Basic Class of Service:	
Access Customer Name Abbr:		Carrier Identification Code:	5124
Account Number:		Account TN:	7709431952
Existing Account Number:		Existing Account TN:	7709431952
Reservation ID:			
Related Purchase Order Number:			
Related Order Number:			
Project Identification:			
Customer Name:			

☐ New Location

Admin | Access | Billing | Disconnect | Hunting | Locations | Optional | UNE Options

Next Screen | Submit Order

Input the following information.

Click here

Local intranet

You will arrive here

Firm Order - Microsoft Internet Explorer provided by BellSouth

File Edit View Favorites Tools Help

Location/Access

BELLSOUTH

Address Validation
Telephone Assign
Loop Makeup
Service Availability
Estimated Date
Customer Record
Templates
LSR Status
Bulk Order
Save
Cancel
Sign Out

Customer ID:	sanford	Customer Name:	Torrance Sanford
Request Type:	Loop/Port	Activity Type:	Conversion to LSP
Purchase Order Number:	2002062409165000	Version:	0
Form Selection:	Administration/Billing	Company Code:	8001

Local Contact Name:
Local Contact Telephone Number:
Address Activity:
Access:
Remarks:

Select option

End User Retaining Listing: Yes
End User Moving
Working Service On Premises
Inside Wire Option:
Inside Wire Contact Name:
Inside Wire Contact Telephone Number:

Admin | Access | Billing | Disconnect | Hunting | Locations | Optional | UNE Options

Next Screen | Submit Order

Go to UNE Options. Click here

View and modify LSR location access data.

Local intranet

You will arrive here. Select options below.

UNE Options - Microsoft Internet Explorer provided by BellSouth

UNE Options

Order Number:

Access Customer Terminal Location:

Additional Point of Termination:

Additional Point of Termination Ind:

☐ Coordinated Hot Cut

Design Routing Code:

Design/Engineering Contact:

Street: Room: Floor:

City: State: Zip Code:

Telephone Number: Fax Number:

Local Service Termination: PWSPGAAS94A Local Serving Office: 770943

Network Channel Code:

Network Channel Interface: Secondary Network Channel Interface:

Port Type: Line Port/U Pot Bay Type:

Done Cancel Clear

Click here

Done Local intranet

You have now return to the "Location/Access" screen

Firm Order - Microsoft Internet Explorer provided by BellSouth

File Edit View Favorites Tools Help

Location/Access

BELLSOUTH

Address validation
Telephone Assign
Loop Makeup
Service Availability
Estimated Date
Customer Record
Templates
LSR Status
Bulk Order
Save
Cancel
Sign Out

Customer ID:	sanford	Customer Name:	Torrance Sanford
Request Type:	Loop/Port	Activity Type:	Conversion to LSP
Purchase Order Number:	2002062409165000	Version:	0
Form Selection:	Administration/Billing	Company Code:	8001

Local Contact Name:
Local Contact Telephone Number:
Address Activity:
Access:
Remarks:
End User Retaining Listing: Yes
☐ End User Moving
☐ Working Service On Premises
Inside Wire Option:
Inside Wire Contact Name:
Inside Wire Contact Telephone Number:

Admin | Access | Billing | Disconnect | Hunting | Locations | Optional | UNE Options

Next Screen | Submit Order

Click here

View and modify LSR location access data.

Local intranet

You will arrive here. Select the options below

Firm Order - Microsoft Internet Explorer provided by BellSouth

File Edit View Favorites Tools Help

PORT

BELLSOUTH

Address Validation
Telephone Assign
Loop Makeup
Service Availability
Estimated Date
Customer Record
Templates
LSR Status
Bulk Order
Save
Cancel
Sign Out

Customer ID:	sanford	Customer Name:	Torrance Sanford
Request Type:	Loop/Port	Activity Type:	Conversion to LSP
Purchase Order Number:	2002062409165000	Version:	0
Form Selection:	Port	Company Code:	8001
Line Selection:	7709431952		

Line Activity: Conversion to LSP (V) Location Number:

PIC: NONE LPIC: NONE Freeze PIC Indicator:

Line Existing Acct Number: Line Existing Acct TN:

Line Class of Service: Line Number Extension:

Main/Alternate TN: NP Indicator: Out TN: Terminal Number:

Cable ID: Channel/Pair: Telephone Line ID:

Relay Rack: Shelf: System ID: Slot:

Pulsing: Signaling:

Start Signaling: Switched Data ID:

Connecting Facility Assignment:

Blocking | Optional | Transfer of Calls | UNE Options

Next Screen | Submit Order

Click next

Local intranet