Technological Analysis of Open Access and Cable Television Systems

Prepared for the American Civil Liberties Union

December 2001

Columbia Telecommunications Corporation
5550 Sterrett Place, Suite 200
Columbia, Maryland 21044
(410) 964-5700 • fax: (410) 964-6478
www.internetctc.com

Table of Contents

I. EXECUTIVE SUMMARY 1

1.1 THE CONTROVERSY 2
1.2 THE CURRENT STATE OF OPEN ACCESS AND BROADBAND COMPETITION 4
1.3 CONCLUSIONS 5
1.4 EXPLANATION OF REPORT FORMAT 8

II. INTRODUCTION TO THREE TYPES OF CABLE SYSTEMS 9

2.1 BRANCH AND TREE LEGACY ARCHITECTURE 11
2.2 HYBRID FIBER/COAXIAL ARCHITECTURE 11
2.2.1 Advantages of HFC Architecture 12
2.2.2 Limitations of HFC architecture 13
2.2.3 Analysis of a Typical HFC System: Portland, Oregon 13
2.3 FIBER-TO-THE-CURB ARCHITECTURE 14

III. POTENTIAL ARCHITECTURES FOR ACCESS BY MULTIPLE ISPS 16

3.1 THE SINGLE-ISP "CLOSED" STANDARD 18
3.1.1 Technical Description of Single-ISP Standard 18
3.1.2 The Single-ISP Standard Gives Operators Control Over Content, Usage, and Private Information 19
3.1.3 Adapting the Single-ISP Standard for Multiple ISPs 21
3.2 REBRANDING AND RESALE OF WHOLESALE SERVICES 21
3.2.1 Technical Description of Rebranding 21
3.2.2 Rebranding Duplicates the Problems of the Single-ISP Standard 22
3.3 OPERATION OF SEPARATE CHANNELS 23
3.3.1 Technical Description of the Separate-Channel Strategy 23
3.3.2 The Separate-Channel Solution Solves Many of the Problems of the Single-ISP Standard and Rebranding 24
3.3.3 The Separate-Channel Approach Also Has Significant Disadvantages 25
3.4 POLICY-BASED ROUTING 25
3.4.1 PBR Enables Practices Contrary to the Goals of Open Access 26
3.4.2 PBR Can Also Be Used to Enable Open Access 27
3.4.3 Technical Description of PBR 27
3.4.4 Respective Roles of ISPs and Cable Operators in PBR 28
3.4.5 Service Provisioning 29
3.4.6 ISP Connections to the Network 30
3.4.7 Quality of Service 30
3.4.8 Existing PBR Solutions: Juniper/Pacific Broadband 31
3.4.9 Existing PBR Solutions: The Canadian Model 31

IV. ISP PERSPECTIVES 33

4.1 EARTHLINK 34
4.1.1 Current Access to Cable Systems 34
4.1.2 Potential Access to Cable Systems 34
4.1.3 Earthlink's Vision of Open Access 35

4.2 EASYSTREET 36
4.2.1 Current Access to Cable Systems *36*
4.2.2 Potential Access to Cable Systems *36*
4.2.3 EasyStreet's Vision of Open Access *36*

V. TECHNICAL RECOMMENDATIONS 38

5.1 SHORT-TERM RECOMMENDATIONS FOR STRATEGIES BY WHICH A CABLE COMPANY CAN ENABLE OPEN ACCESS 38
5.1.1 Make Open Access Modifications During Upgrades and Conversions *38*
5.1.2 Provide for Headend Co-Location *38*
5.1.3 Upgrade Headend Router *39*
5.1.4 Repair May Be Needed to Outdoor Cable Plant for Separate-Channel Solution *39*
5.2 LONG-TERM RECOMMENDATIONS: PUBLIC INTEREST ARCHITECTURE 40
5.2.1 Construct Extensive Fiber Optics *40*
5.2.2 Construct Survivable, Redundant Architecture *40*
5.2.3 Enable Access to Diversity of Providers *40*
5.2.4 Standardize Equipment *41*

APPENDIX A: CLICK! NETWORK, TACOMA, WASHINGTON A-1

I. Background *A-1*
II. Network Architecture *A-2*
III. Cable Modem Network *A-4*
IV. Results of Competition *A-6*
V. The Tacoma Institutional Networks (I-Net) *A-6*

APPENDIX B: A REPRESENTATIVE SYSTEM IN PORTLAND, OR B-1

I. Network Background and Architecture *B-1*
II. Cable Modem Network *B-3*
III. The Portland I-Net *B-4*

APPENDIX C: TECHNICAL DESCRIPTION OF BRANCH AND TREE ARCHITECTURE C-1

I. Technical Description of Branch and Tree Architecture *C-1*
II. Technical Limitations of Branch and Tree Architecture *C-7*

APPENDIX D: TECHNICAL DESCRIPTION OF HYBRID FIBER/COAXIAL ARCHITECTURE D-1

I. Technical Description of HFC Architecture *D-1*
II. Advantages and Limitations of HFC Architecture *D-10*

APPENDIX E: TECHNICAL DESCRIPTION OF FIBER-TO-THE-CURB ARCHITECTURE E-1

I. Technical Description of FTTC Architecture *E-1*
II. Advantages of FTTC Architecture *E-5*

APPENDIX F: SUMMARY COMPARISON OF THREE TYPES OF ARCHITECTURE F-1

Table of Figures

Figure 1: Summary Diagram of Three Categories of Cable Architecture *10*
Figure 2: Summary Diagram of Four Models for Cable Modem Service *17*
Figure 3: The Single-ISP Standard for Cable Modem Service *18*
Figure 4: The Rebranding Strategy *22*
Figure 5: The Separate-Channel Strategy *24*
Figure 6: Policy-Based Routing with ISP Co-Location at Headend *28*
Figure 7: Policy-Based Routing Over Internet *28*
Figure A-1: Click! Network Architecture *A-3*
Figure B-1: Portland Network Architecture *B-3*
Figure C-1: Typical Branch and Tree Architecture *C-2*
Figure C-2: Typical Broadband Subscriber Frequency Allocation *C-4*
Figure C- 3: Branch and Tree Headend *C-6*
Figure D-1: Modern Hybrid Fiber/Coaxial Architecture *D-1*
Figure D-2: Hybrid Fiber/Coaxial Headend *D-4*
Figure D-3: Cable Modem Transmission *D-6*
Figure D-4: Site Caching *D-9*
Figure D-5: Locating Content Locally *D-10*
Figure E-1: Fiber-to-the-Curb Architecture *E-2*
Figure E-2: Fiber-to-the-Curb Headend *E-4*
Figure E-3: Migration from Fiber-to-the-Curb to Passive Optical Network *E-6*

I. Executive Summary

There has been much controversy in recent years over the provision of Internet access by cable providers, and whether they should be required to offer subscribers "open access" to Internet Service Providers (ISPs) that compete with their own ISP. The debate has ranged from political to economic to technical issues. This Report concerns the technical side of the issue. The Report evaluates the capabilities of existing cable systems as well as existing models for the implementation of open access – an evaluation based on a four-part process of research and analysis with four components. Specifically, the Report:

- Examines the different models of cable architecture.
- Analyzes the capability of these architectures to provide open access on cable systems.
- Evaluates two cable systems – one that offers a limited form of access (Tacoma Click! in Tacoma, Washington) and one that does not (AT&T Broadband in Portland, Oregon).
- Summarizes interviews with officials at two ISPs who have been excluded from offering access on many cable systems.

On the basis of this analysis, this Report reaches the following conclusions:

1) There are no insurmountable technical bars to nondiscriminatory open access,[1] either now or in the long term.
2) Technically, nothing precludes cable operators from monitoring and manipulating customers' Internet use under the single-ISP standard or under the "rebranding" approach that many operators have adopted.
3) Neither of the cable systems studied features true open access. Even the system in Tacoma, which allows "rebranding" access to multiple ISPs, is not open access because it limits the ISPs' ability to offer different services and enables manipulation and monitoring of data.
4) Cable operators should adopt a recommended "public interest architecture" if the goal is to facilitate open access.

The Report was prepared by Columbia Telecommunications Corporation (CTC) for the American Civil Liberties Union.

All text and diagrams copyright Columbia Telecommunications Corporation 2001

[1] This report uses the term "open access" to refer to the ability of competing Internet Service Providers to offer services over cable systems, assuming both of the following essential technical requirements are met: (1) the technical architecture or its configuration enable ISPs to offer the services they wish without constraints imposed by the cable company for non-technical reasons; and (2) the technical architecture or its configuration precludes the cable company from manipulating or monitoring the content of the data transmissions sent and received by the ISPs' customers. Under this definition, simple access by multiple ISPs (as in the "rebranding" scenario favored by some cable operators) is not open access because the cable company controls the services the ISP can offer and is able to manipulate and monitor data.

1.1 The Controversy

Broadband cable services were introduced over cable in the mid-1990s, a few years before the commercial introduction of broadband over telephone and wireless technology.[2] Cable operators limited subscribers to a single Internet Service Provider, usually the operator's own ISP or affiliated ISPs[3]. With only one ISP available, cable broadband data networks therefore typically provide a single data network, operated solely by the cable television operator or its industry partners. In contrast, public switched telephone networks are "common carriers" who must connect consumers to any number of data network providers.

Cable currently leads both DSL and wireless broadband data services in number of subscribers. Cable broadband is more widely available to residential customers than are either DSL or wireless broadband.[4] As control over cable broadband access became concentrated in a few companies, concerns arose regarding diversity of content and technological innovation.[5] ISPs, competitive and incumbent phone companies, and public interest groups argued for "open access" by multiple ISPs to data networks over cable systems.

These proponents of open access argue as follows:

- The practice of excluding unaffiliated ISPs gives cable operators excessive control, not only over high-speed communications services, but also over the content available over those communications systems.

- The vertical architecture control that results from corporate unions such as that of AOL Time Warner (AOLTW) enables companies to prioritize affiliated content

[2] Broadband represents the second generation of home Internet access. Broadband subscribers can view video, participate in interactive multimedia games, communicate by video link, download music and images, and accomplish everything that other Internet users can, but with higher quality and shorter downloading time. Broadband is available by way of cable lines, telephone lines, and wireless. To offer broadband services, cable or telephone lines generally have to be upgraded or rebuilt. Broadband cable modem services are provided over a separate channel from those used for video services. Subscribers are equipped with a cable modem that provides the link between the cable system and the subscriber's computer. Broadband telephone services are generally provided over digital subscriber line (DSL) technology. Subscribers are equipped with a DSL modem or router and may receive the service over the same line as their telephone services, if the line is in adequate condition. Broadband wireless services are available to subscribers with a small antenna on their homes that links their computer to a large antenna in their metropolitan area.

[3] Affiliated ISPs include Road Runner (affiliated with Time Warner Cable), AT&T Worldnet (affiliated with AT&T Broadband), and Excite@Home (until its recent demise, affiliated with AT&T Broadband, Comcast, and Cox).

[4] "Federal Communications Commission Releases Data on High Speed Services for Internet Access." FCC News, http://www.fcc.gov/Bureaus/Common_Carrier/News_Releases/2001/nrcc0133.html.

[5] See, for example, "Creating Open Access to the Broadband Internet," Consumer Federation of America, December 1999; Lawrence Lessig, *Code and Other Laws of Cyberspace,* (New York, Basic Books, 1999).

(content they own or are paid to favor) and exclude or discriminate against unaffiliated content.

- Single-ISP cable systems also have the ability to create and enforce usage patterns that are not only unattractive to the consumer but that raise privacy and other public policy concerns. For example, the favored ISP and its distribution affiliates can remove or block material on customer web sites and can monitor transmissions such as site requests and Internet relay chat messaging. Customer privacy could be compromised by the resale or distribution of user information to advertisers.

- The problem is especially acute in broadband (as opposed to narrowband services such as telephone dial-up) because there currently does not exist any market restraint on these practices. The consumer does not have an alternative source of these services, other than in the unlikely event that comparable DSL or wireless broadband is available.

The debate over open access took place largely in the context of local government attempts to require open access of cable franchisees.[6] The cable operators opposed what they called "forced access" requirements. Many large operators are, however, contemplating or running trials of limited forms of multiple ISP access[7], usually of the "rebranding" model.

---

[6] For example, the transfer of cable systems belonging to Tele-Communications, Inc. (TCI) to AT&T Broadband (AT&T) led the City of Portland, Oregon, to require AT&T to open its systems to competing ISPs as a condition of transfer of the local franchise. AT&T argued that the local government had no authority to impose the requirement and that Internet access policies should be driven by market forces rather than government regulations. ("AT&T Wins Case to Keep Rivals Off Networks" Corey Grice, *CNET News.com*, http://news.cnet.com/news/0-1004-200-2130173.html?tag=st.ne.1002.thed.ni.) A federal district court upheld Portland's open access regulations, but the decision was later overturned on AT&T's appeal to the Ninth Circuit Court of Appeals.

[7] In December 2000, Time Warner and AOL agreed to provide some form of access to other ISPs as a condition imposed by the FCC and Federal Trade Commission (FTC) for approval of their merger. The conditions arose from monopoly concerns relating to the combined industry strengths of AOL's Internet presence and Time Warner's cable and media systems. The conditions were also motivated by concerns to maintain competition and interoperability between AOLTW and other companies on the Internet. Under the agreement, AOLTW is required to offer at least one independent ISP service on each Time Warner Cable (TWC, the cable division of AOLTW) system before AOL service can be offered over that system. Within 90 days of offering AOL on a TWC system, AOLTW must sign deals with at least two other non-affiliated ISPs. AOLTW also must meet the following requirements: 1) may not unfairly favor its own Internet services when customers seek ISP service information; 2) must allow each ISP to control the content of the subscriber's first screen; 3) may not require an ISP to include any content; 4) may not force cable modem users to reach the ISP of their choice though affiliated ISPs (AOL or RoadRunner); 5) must permit the ISP to have direct billing arrangements with subscribers; and 6) may not sign any contracts that prevent ISPs from disclosing terms of their agreement to the FCC. ("Conditioned Approval of AOL-Time Warner Merger," http://www.fcc.gov/transaction/aol-tw-decision.html.)

1.2 The Current State of Open Access and Broadband Competition

As of this writing, only one ISP is available on most cable systems that offer cable modem service. In those circumstances where multiple ISPs are available, and the cable operator announces it has implemented "open access," it is often referring to a limited form of access (often referred to as "branding" or "rebranding"—see Section III below) in which the operator decides which ISPs are granted access to the system.[8] Consumer choice is limited to those providers that have agreements with the cable operator. Further, the operators usually retain significant control over what services the ISPs can provide consumers, and the ISPs generally are limited to rebranding the connection to the Internet backbone that is selected and set up by the operators.

Cable competition exists in only a few markets, despite legal and regulatory attempts in the 1990's to foster competition and despite the efforts of "overbuilders"[9] such as RCN and Wide Open West, most of whom have curtailed or stopped construction of competitive cable networks because of economic circumstances.

The limited broadband competition that exists is "facilities-based" among cable, wireless, and DSL services, rather than among competing providers over the same medium. As a result, some dissatisfied cable customers may be able to switch to a competing medium, such as DSL (in those areas where competing media are available), but almost none have the option of selecting a competing cable modem service.[10]

This model is certainly simple from a technical standpoint, but begs the question of competition. Most wireless networking technologies currently lag behind cable and DSL in terms of reliability, capacity and speed, and may be technically infeasible where terrain or foliage prevent deployment. In addition, DSL is more limited in bandwidth than cable modem service and requires proximity to a telephone central office. In the current market, cable modems are dominant for residential use and DSL is used more commonly by small to medium businesses.[11]

---

[8] In the case of the AOLTW systems, the consent decree partially determines which ISPs have access. (Ibid.)

[9] The term overbuilder refers to companies that build plant to offer services in areas already served by an incumbent company that previously has held a monopoly.

[10] Tacoma, Washington is one of the few areas where facilities-based cable competition is available. In the late 1990s, the Click! Network was formed by Tacoma's electrical utility to offer competitive cable and wholesale Internet services as a competitor to the incumbent cable operator, AT&T Broadband. Click! is an "overbuilder." The background, technology, and services of the Click! Network are described in detail in Appendix A.

[11] "Broadband Today," http://ftp.fcc.gov/Bureaus/Cable/Reports/broadban.pdf; "DSL vs. Cable Modems: The Future of High-Speed Internet Access 2000 – 2005," http://www.insight-corp.com; "Give Peace a Chance," Patricia Fusco, *ISP-Planet*, http://www.isp-planet.com/politics/give_peace_a_ chance.html.

1.3 Conclusions

CTC's analysis of cable architecture and its potential to offer open access yields three conclusions:

Conclusion No. 1: There are no technical barriers to true open access

Despite the claims of some cable operators, there is virtually no technical bar to allowing competing ISPs to offer services over cable systems, so long as a cable operator is willing or forced to cooperate in providing access. CTC found no technical reason why the cable systems we studied in Portland and Tacoma cannot offer either a separate-channel or a policy-based router plan (described in detail in Section III below), and know of no reason why such models should not be possible on other cable systems.

The most common cable system architecture, hybrid-fiber coaxial (HFC), is capable of offering advanced, interactive services in an open access environment. The operator does not need to construct or upgrade cable plant, although some additional repair and maintenance may be necessary. Each of the technical barriers to open access has been overcome by equipment manufacturers or, in the case of Canada, by the regulatory body responsible for cable.

There are several models for offering access to multiple ISPs over cable, but not all of them amount to true open access. The few cable operators who already offer access to multiple ISPs typically do so by "rebranding." Under this model, the cable operator sells services to ISPs on a wholesale basis, and the ISPs resell the services at retail under their own brands to consumers. Rebranding, however, does not increase the diversity of choices open to consumers, because the cable operator can control what the ISPs offer with respect to the speed, content, and other aspect of the Internet connection. Absent policy or contractual limitations, the cable operator is free to manipulate and control the Internet content of its competitor's customers just as it does with its own customers. From a technical standpoint, rebranding is not "open" access at all but is merely the provision of an identical Internet connection by multiple ISPs.

There are other ways of providing open access that do create real choice for consumers, however. One is the "separate-channel" solution, which allows ISPs to share capacity by using separate channels in the same way as competing television programmers. Operators have successfully used this approach to separate business customers or Institutional Networks from residential cable modem customers. It is relatively simple to adapt this model to open access. The separate-channel approach is limited by the availability of capacity for separate channels -- most cable systems can accommodate only a few ISPs on separate channels. It is, however, a viable way to enable competing ISPs to offer a range of services. Most significantly, it precludes the cable operator from controlling other ISPs' speed, quality, and flow of content from the Internet.

Another viable technical model for open access is "policy-based routing" (PBR). PBR allows customers to reach their ISP through a cable network by way of a policy-based

router, which routes Internet traffic from the user to the appropriate ISP based on the user's source Internet Protocol (IP) address. Like the rebranding model, PBR allows the cable operator to control the speed, content, and other aspects of the Internet connection. However, it potentially allows users the most freedom in ISP choice and can enable the ISP to have more control over the product it provides to a customer, if the cable operator is constrained in its control over the Internet connection. As of this writing, this model has not been used by any major cable operator to implement open access in a large-scale implementation, although the technology for implementation is currently available.

PBR has received extensive criticism because it makes possible the kind of practices by cable companies to which the proponents of open access object.[12] PBR is capable of enabling the implementation of open access, but, even in an "open" environment, can be set up to allow the cable company control over content, private information, and the other areas of concern raised by open access proponents.

It is true that PBR can be used either to facilitate or to defeat the purposes of open access, depending on how it is implemented. Which ends PBR serves in a given implementation is not a technical matter—it is a matter of the contractual relationships entered into by the cable operator and other ISPs to whom it grants access – and of the public policies under which those contracts are established. From a technical standpoint, PBR is a viable model for providing consumer choice over cable broadband.

Conclusion No. 2: Technically, rebranding is not open access because it does not preclude cable operators from manipulating and monitoring data transmissions over their networks

When a cable broadband service offers a closed, single-ISP configuation – or its equivalent, multiple ISPs under a rebranding model – the operator has the technical ability to manipulate data transmissions in numerous ways, many of which its customers will not be aware. These include:

---

[12] See, for example, "The Internet Under Siege," Lawrence Lessig, *Foreign Policy,* November/December 2001:

> Cable companies have deployed technologies to enable them to engage in a form of discrimination in the service they provide. Cisco, for example, developed "policy-based routers" that enable cable companies to choose which content flows quickly and which flows slowly. With these, and other technologies, cable companies will be in a position to exercise power over the content and applications that operate on their networks.
>
> This control has already begun in the United States. ISPs running cable services have exercised their power to ban certain kinds of applications (specifically, those that enable peer-to-peer service). They have blocked particular content (advertising from competitors, for example) when that content was not consistent with their business model. The model for these providers is the model of cable television generally—controlling access and content to the cable providers' end.

(referring to "Controlling Your Network – A Must For Cable Operators," Cisco Systems, 1999).

- Controlling the speed and reliability of the connection to the Internet.

- Blocking certain types of usage such as virtual private networks (VPN), which can bridge a user to an office or corporate network; the usage of the cable modem by multiple computers attached to a user's home network; and Internet-based voice services.

- Forcing customers to access the Internet over a certain home page selected by the operator for financial or political reasons.

- Blocking access to the Internet under certain circumstances and forcing the user to used closed "on-line" services.

- Requiring customers to purchase an upgraded service package to be able to use restricted or high-bandwidth services such as telecommuting, video-conferencing, or imaging.

- Limiting, slowing, or blocking the use of upstream capacity – in effect blocking the use of the Internet as a peer-to-peer service (enabling video-conferencing or other symmetrical high-bandwidth, real-time, two-way applications).

- Slowing or blocking access to certain sites on the Internet, such as those without financial arrangements with the cable company's ISP, or those with content considered objectionable for political or competitive reasons; and speeding transmission to affiliated sites.

- Maintaining records of the content of Internet sites visited by customers and addresses to which customers send e-mail.

All of these forms of data manipulation are technically possible in circumstances where operators offer rebranding, and rebranding therefore is not technically open access, even if it does enable competing ISPs to offer services. For example, in the Takoma Click! Network, multiple ISPs have access to the network, but they are limited by Click! as to what services they can provide. From a technical standpoint, this form of "access" is only marginally more "open" than that offered by AT&T Broadband in Portland, where only one ISP is available as of this writing. Both the Takoma and Portland systems are discussed in detail below.

Conclusion No. 3: Recommendation for a Public Interest Architecture

A study of available cable architectures and models for the provision of open access leads us to recommend the adoption of a "Public Interest Architecture" for cable systems. This "Public Interest Architecture" is based on the principle of maximizing consumer choice, ISP competition, and local community access to technology. This architecture represents

the next generation of network construction, which offers the cable and ISP industries the most capable, flexible systems possible utilizing current technology. These public interest principles thus harmonize with many industry interests, and merit significant consideration as future rounds of construction and upgrades are undertaken.

The elements of that architecture include:

- In the short term, taking advantage of routine upgrades and rebuilds to facilitate open access by taking steps such as upgrading equipment and expanding the space available in facilities for the co-location of other ISPs' equipment.

- Enabling open access so that customers have access to a diversity of providers even when facilities-based competition is absent.

- The long-term installation of extensive fiber optics, either fiber-to-the-curb or fiber-to-the-home.

- Standardizing cable company and consumer equipment in order to speed deployment and allow for multiple, competing providers and thus customer choice in the purchase of hardware such as set-top boxes.

1.4 Explanation of Report Format

Section II of this Report briefly describes the three major categories of cable systems in order to assess the capability of each category to offer open access and to compare the categories with regard to issues such as design architecture, use of advanced technology, bandwidth capacity, overall reliability, and scalability.

Section III describes and compares the various model architectures for single and multiple ISP cable modem service and enumerates their relative advantages and drawbacks.

Section IV summarizes CTC's discussions with two ISPs in order to ascertain the interests and plans of some ISPs with respect to open access, as well as to ascertain the experience of ISPs in trying to obtain access to cable systems.

Finally, **Section V** provides technical recommendations for future cable system development, in light of the public interest principles underlying such matters as open access, and community access to technology. Specifically, "public interest upgrades" are recommended to facilitate open access on existing cable systems in the short-term, and the "Public Interest Architecture" is recommended for the next generation of network construction to facilitate the public interest in the long-term.

II. Introduction to Three Types of Cable Systems

The cable television industry includes three primary types of cable systems:

- "Branch and Tree" architecture offering one-way transmission only;
- "Hybrid Fiber/Coaxial" (HFC) two-way capable systems integrating fiber optic and coaxial cable; and
- "Fiber-to-the-Curb" (FTTC) enhanced two-way systems with increased reliability, capacity, and scalability.

All three categories include a central facility known as the "headend," which serves as the central location for all technical operations. The headend receives and processes the various programming signals and then sends these transmissions to the subscribers over the cable plant. The headend building contains video modulators, network administration equipment, and the equipment used for signal receiving, processing, and transmitting, such as satellite and off-air antennas. In some systems, some of the functionality of the headend is distributed to "hubs" that deploy the headend equipment closer to the subscriber.

Generally, the remainder of the cable system can be referred to as "cable plant," which includes all coaxial and/or fiber optic lines over which signals are sent, amplifiers and nodes to boost and distribute the signal, and power supplies to run and maintain the system.

Detailed technical information regarding all three system categories, including illustrative graphics, is included in Appendices C-E. A summary comparison of all three categories is included in Appendix F.

Figure 1: Summary Diagram of Three Categories of Cable Architecture

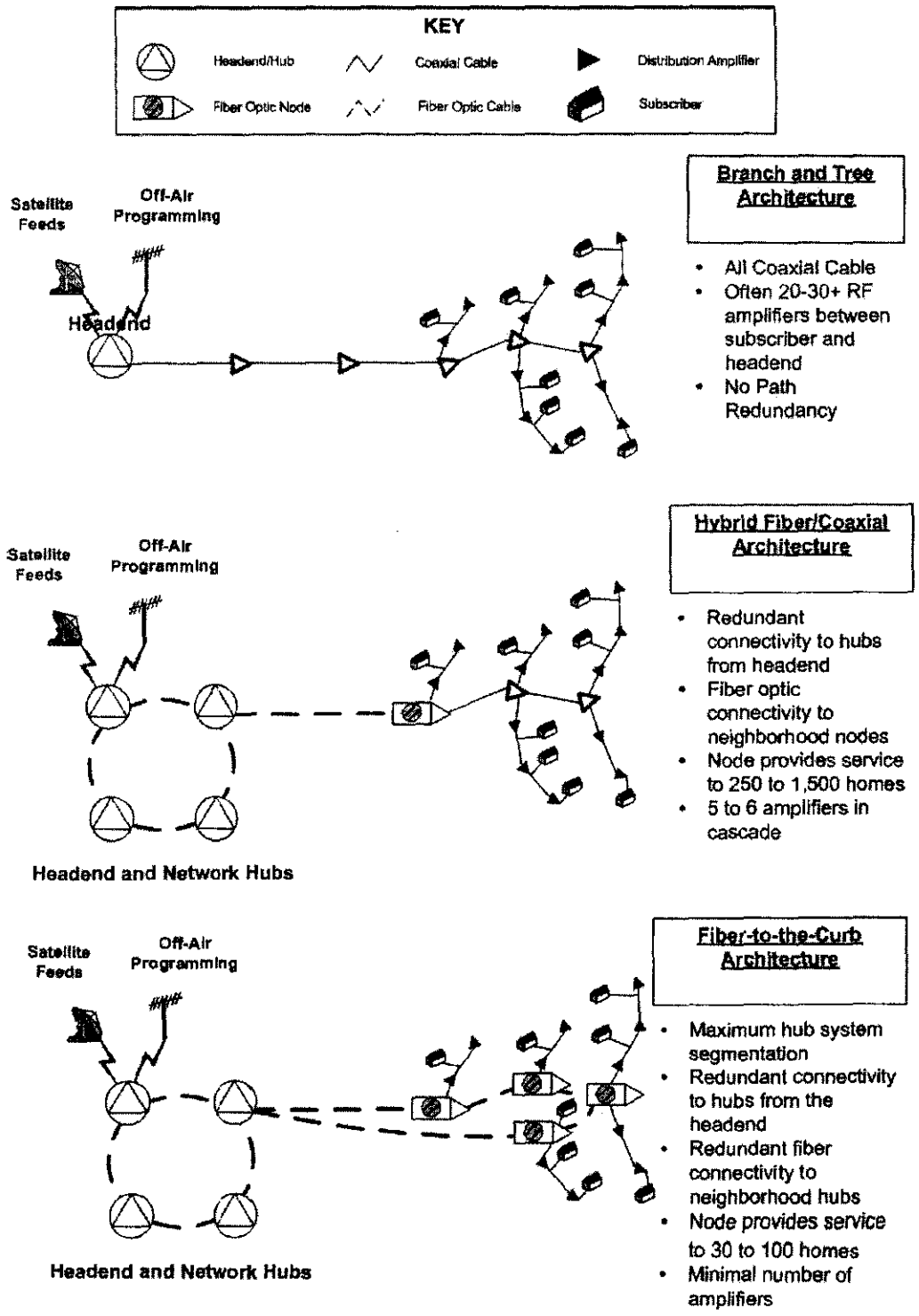

2.1 Branch and Tree Legacy Architecture

"Branch and tree" coaxial cable topology refers to the architecture of cable systems that have typically not been upgraded since 1995. These systems are also known as "legacy" systems because their architecture dates from the earliest days of cable in the 1950s and 1960s.[13]

Branch and tree systems utilize dated technology that reflects the origin of cable television as a one-way entertainment medium with no status monitoring systems or architectural redundancy. Early cable television systems started as centralized antennas on hills that received over-the-air television signals and transmitted them by cable to homes that could not receive over-the-air signals. In later years, cable systems added additional signals to their offerings by receiving programming over satellite dishes. In this way, cable became a transmission medium for superstations, national news, sports, and movies channels as well as for the original local broadcast stations. Cable was able to offer more programming alternatives and better quality than over-the-air television.

The dated architecture of branch and tree systems precludes two-way and other advanced services. All-coaxial systems cannot offer two-way services other than rudimentary pay-per-view and telemetry. Two-way operation is precluded by the large amount of system noise in the upstream direction and by the lack of fiber optics and, therefore, of significant capacity. A branch and tree system is based on one trunk. This is in contrast to more recent architectures described below, in which the system is segmented (essentially, multiple trunks are created by construction of neighborhood fiber optic nodes that translate and boost the signal) to enable each node to reuse channels and thereby multiply capacity for cable modem users.

A detailed discussion of branch and tree technology is presented in Appendix C.

2.2 Hybrid Fiber/Coaxial Architecture

Since the mid-1990s, most American cable networks have incorporated fiber optic technology. These systems use fiber optic cable to link the headend to neighborhood coaxial cable in an architecture called Hybrid Fiber/Coaxial (HFC). In the neighborhoods, the traditional coaxial cable distribution remains, but with upgrades to enable two-way operation.

Generally, the evolution of cable networks from the branch and tree configuration to modern HFC networks has entailed construction of fiber optics from the headend to intermediate "hubs" and then eventually to "nodes" in each neighborhood. The nodes contain active devices that convert the fiber optic signals to RF signals for delivery over existing coaxial cable. This architecture has enabled the provision of two-way services

[13] After the most recent round of system upgrades in the late 1990s and early 2000s, most urban and suburban systems have been upgraded to HFC. Branch and Tree systems are found primarily in rural and less populated areas.

and has greatly increased the reliability and quality of the signals offered over the cable system.

The technical architecture and operations of HFC systems, including illustrative diagrams, is detailed in Appendix D, which also includes an extensive discussion of the workings of cable modem networks on HFC systems.

2.2.1 Advantages of HFC Architecture

The use of fiber optic cable in HFC systems provides a significant number of advantages over all-coaxial branch and tree systems. These improvements include:

- Fiber backbone with greater capacity than coaxial trunk cables;
- Ability to segment neighborhoods based on nodes, increasing available capacity for each subscriber;
- Reduction in active components, decreasing noise;
- Higher reliability and more cost effective maintenance; and
- Fiber replacing much of the coaxial cables plant, reducing susceptibility to unwanted electromagnetic interference.

All of these improvements make it possible for HFC systems to offer high-speed Internet service with several times the speed of conventional phone line services. In practice, properly operating cable modem networks operate about three times as fast as telephone services in the upstream direction and up to twenty-six times as fast in the downstream direction.[14] HFC capitalizes on the fact that the cable pipe is the largest bandwidth communications pipe into most residences and that cable architecture can be modified in a cost-effective manner to deliver packet-based data networking to customers. Unlike telephone dial-up Internet users, the customers on a cable modem network are on a large local area network, as if they were in the same office building or campus as the cable company. This is a great advantage for delivering fast download speeds to customers. Video-on-demand, subscription video-on-demand, and telephone services can also be offered over HFC networks.

HFC systems also offer significant reliability, as well as the capability to monitor problems and outages, so that customer complaints are not the sole form of status monitoring, as they are in branch and tree systems. As the Internet becomes a more critical part of economic and emergency infrastructure, that reliability becomes crucial. Customers rely on the telephone infrastructure for critical services and will increasingly demand the same reliability from cable modem infrastructure for Internet and telephone services.

Significantly, HFC systems are capable of offering open access, as is discussed in Section III below. AT&T is currently offering ISP choice on a trial basis on its HFC system in

[14] AT&T Broadband Welcome Letter, http://help.broadband.att.com/faqprintable.jsp?name=downstream_rate_management.

Boulder, Colorado. AT&T is reportedly planning to offer multiple ISPs statewide in Massachusetts in 2002.[15]

2.2.2 Limitations of HFC architecture

The shared HFC architecture also creates limitations for the network. For example, security concerns necessitate that packets on the network be encrypted or scrambled to protect the information of subscribers sharing a segment. The architecture also does not offer a ready-made solution to offer a range of service levels to different customers. Finally, the network architecture makes it more difficult to separate the provider of the physical architecture from the provider of the Internet connection and Internet services, relative to a physical architecture where each user has a dedicated physical connection from a home or business to the ISP's routers. All of these challenges have solutions that are being tested and implemented in the cable industry.

Another limitation of the HFC architecture is that extensive additional fiber construction and terminal equipment are required to scale HFC systems for significantly greater bandwidth per customer. There exists a hard capacity limit per node area. The limitation is imposed by the need for data services to go through HFC-based router equipment in the cable headend. In all existing and planned cable modem systems, the hardware limits each network segment to 40 or less Mbps downstream capacity. In order to increase the capacity available to a subscriber, the cable operator must segment its system to progressively smaller node areas. Even at maximum segmentation, HFC will have a hard limit of 40 Mbps per user. This is in contrast to fiber optic technologies, that transport hundreds of thousands of Mbps, and that can be easily scaled to higher speed as technology advances by changing the equipment at the ends of the fiber and leaving the cable plant itself unchanged.

HFC-based equipment is also more specialized than equipment for fiber optic communications and is thus manufactured by fewer companies. This affords the cable operator less flexibility than an ISP using telephone or carrier facilities.

2.2.3 Analysis of a Typical HFC System: Portland, Oregon

CTC visited and analyzed a large metropolitan system that is technologically typical of HFC cable architectures around the United States and examined its capabilities from the point of view of open access. To this end, CTC studied the AT&T Broadband cable system in Portland, Oregon.

---

[15] "A Tale of Two Trials," Leslie Ellis, *Communications & Engineering Design*, May 2001, http://cedmagazine.com/ced/2001/0501/05d/htm; "Massachusetts Coalition for Consumer Choice and Competition on the Internet and AT&T Agree on Plan for Consumer Choice of ISPs in Massachusetts," AT&T News Release, http://www.att.com/press/item/0,1354,3037,00.html, June 27, 2001. Although the industry is reluctant to disclose technical information, these systems are almost certainly offering rebranding.

No form of access by multiple ISPs has been offered over this system. However, CTC found no technical reason why that system cannot offer either a separate-channel or a policy-based router plan (discussed in Section III), provided that AT&T deploys the necessary equipment and works in cooperation with ISPs.

Although AT&T refused to meet with CTC, CTC obtained extensive information regarding the system from David C. Olson, director of the local cable regulatory body that oversees the Portland system.[16] Olson reported that Portland customers have significant problems with AT&T, particularly poor response time for telephone calls, and that the City had fined AT&T $180,000 as of the end of 2000 for not answering the telephone in accordance with FCC and City standards.

Detailed information on the Portland AT&T system is presented in Appendix B.

2.3 Fiber-to-the-Curb Architecture

The third category of systems, known as fiber-to-the-curb (FTTC), continues the trend of deploying fiber deep into the network. As nodes are segmented into smaller areas, the number of users on a node decreases and available bandwidth and system redundancy increase. In a variation of FTTC architecture, "fiber-to-the-home" (FTTH) systems deploy fiber all the way into residences. As of the current writing, there exist only a few FTTC systems in the United States, and the cable industry has not announced plans to upgrade most systems to this level.

Appendix E details a network infrastructure that combines the physical architecture of existing FTTC systems, which has been deployed in a few communities, with an advanced headend and hub concept that incorporates existing, tried technologies, although it has not yet been deployed. This architecture represents the next generation of cable network construction because of its flexibility in providing either cable-based or fiber-based services, its capability to directly connect multiple service providers to subscribers, its operational robustness, and its almost unlimited capacity per subscriber. For these same reasons, this architecture serves as the basis for the model public interest architecture described in Section VI below.

The advantages of FTTC include the following:

- Fiber optic cable costs approximately the same per-mile as coaxial cable.
- FTTC systems can provide more advanced high-speed interactive services than do HFC systems. An FTTC system can simultaneously offer interactive television, video-on-demand, and higher capacity data and Internet access. The deployment of fiber optics deep into neighborhoods enables the provider to offer all of the

[16] CTC wishes to acknowledge and thank Mr. Olson for his efforts to obtain information for this Report. CTC's analysis of the Portland AT&T system would have been impossible without Mr. Olson's assistance.

applications possible in HFC systems, and to operate with increased reliability and redundancy.

- Reliability is increased by replacement of active electronic components and coaxial cables by temperature-and RF-resistant fiber optic networks. In addition, the subscribers are able to connect via a range of services, including 10/100/1000 Mbps Ethernet, ATM, and dedicated fiber optics known as "dark fiber."

- Scalability is high with FTTC because of the high density of fibers and coverage of nodes. The system can be upgraded, in its entirety or by neighborhood, to a fully fiber-optic passive optical network (PON) by: 1) constructing fiber to users' homes, and 2) installing multiplexers at node locations (see Appendix E). Migration of FTTC to PON would also increase system scalability with almost unlimited capacity available to each home.

- Once constructed, FTTC architecture more economically facilitates the construction of fiber directly to those subscribers who request additional bandwidth, such as businesses and residents who run home businesses, telecommute, or are early adopters of new technology. With the ability to connect individual users with dedicated fiber optics, capacity is almost unlimited.

- This model thus addresses many of the limitations of HFC technology, and should be of interest to new cable operators and operators constructing networks in new developments, campuses, and apartment buildings. An FTTC system is likely to be the optimal choice when building a new network.

III. Potential Architectures for Access by Multiple ISPs

There are several different models for opening cable systems to multiple ISPs. They include:

- Resale and rebranding of wholesale services purchased by ISPs from the cable operator—this is the model proposed and favored by many of the large cable operators;
- Use of separate channels by separate ISPs; and
- Policy-based routing.

All of these models can be implemented on the HFC architecture that is used by most systems (including the AT&T Broadband system in Portland), as well as on an FTTC architecture. These three multiple-ISP models, along with the single-ISP model that is used by most cable systems today, are diagrammed in Figure 2 and discussed below.

Figure 2: Summary Diagram of Four Models for Cable Modem Service

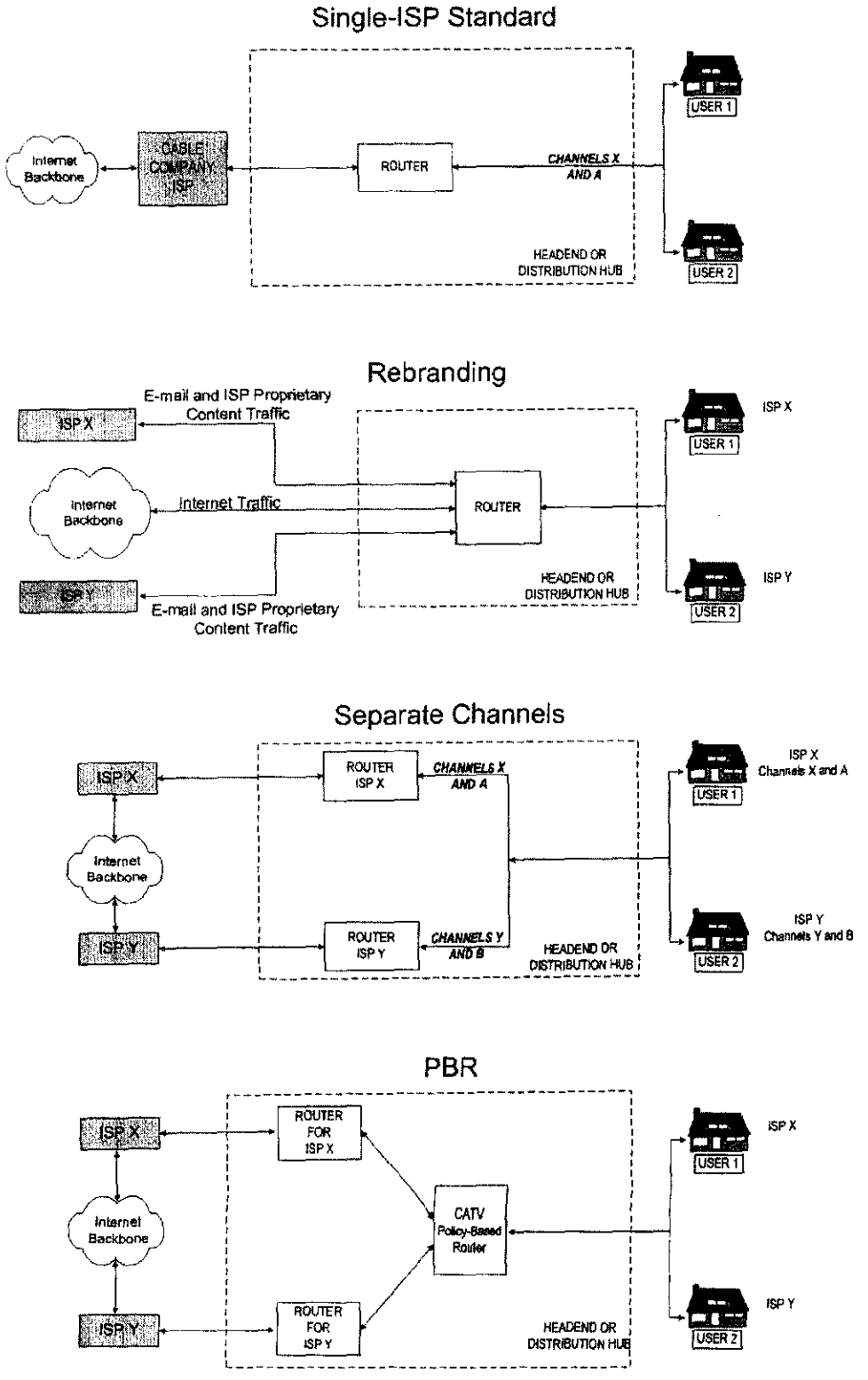

3.1 The Single-ISP "Closed" Standard

As of this writing, a single-ISP "closed" model is dominant on those cable systems that offer cable modem service, including the AT&T system in Portland. Under this model, only one ISP offers service over the cable modem system. Usually, that ISP is affiliated with or owned by the cable operator.

3.1.1 Technical Description of Single-ISP Standard

The single-ISP model is diagrammed in Figure 3, and described below.

Figure 3: The Single-ISP Standard for Cable Modem Service

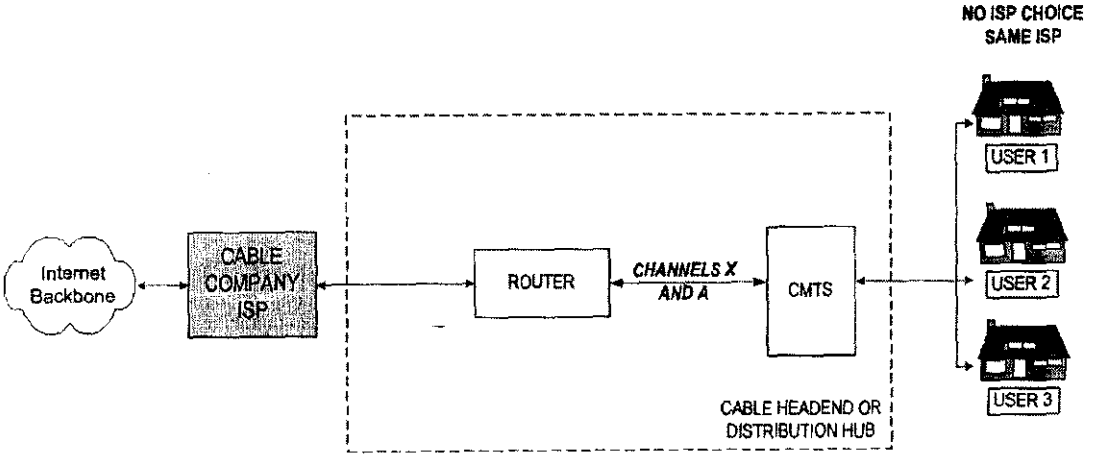

Internet transmissions, which are sent in a form called "packets," normally follow the following path through a cable modem system: first, the customer's cable modem sends the packets over the cable system to a device, usually located in the headend, called a cable modem termination system (CMTS).[17] The CMTS then forwards the packets on to a router, which is also usually located in the headend.

Generally, the router identifies the destination address of an Internet packet and directs it accordingly: to the Internet or to servers for mail, proprietary content, news groups, and chat.[18] Various local servers may also connect to the router at the headend for caching of frequently-viewed web sites.

[17] The CMTS sets the power level of the transmissions and assigns the cable modem one or more time slots for upstream transmission. Upstream data is arranged into slots, where each modem "speaks" during its assigned time slots. All downstream data is sent out in one shared stream, with each modem reading only authorized information addressed to it. "DOCSIS Cable Modem Technology." David Fellow and Doug Jones, *IEEE Magazine*, March 2001. Business or high-end customers may receive more time slots or higher priority.

[18] In a multiple-ISP scenario such as PBR or rebranding, the router would direct the packets to the appropriate ISP.

Packets in the reverse direction follow the opposite path: from the Internet or ISP servers to the router, on to the CMTS, and then over the distribution system of the cable network to the user's home or business, where a cable modem enables the user's computer to receive and read the transmission.

Single-ISP systems often utilize a basic technology known as "destination based routing." Under this technology, the router directs the packet based on the destination address of the packet.[19] Destination based routing is made possible by the identifying numbers carried by every data packet that travels over the Internet. Under a protocol called Transmission Control Protocol/Internetworking Protocol (TCP/IP), packets are distinguished by numbers that identify, among other things:

- Their content-type (the "TCP" part of the number, also known as the "port," identifies the type of application originating the packet, such as mail, web-content, voice, video, etc.) and

- Their address (the "IP" part -- IP addresses are like street addresses or telephone numbers for each computer and other device on the Internet. All Internet packets contain headers with a source and destination IP address).

A destination-based router recognizes the IP address of the packet and then directs it accordingly.

Appendix D contains further description of the workings of a cable modem network, including the dominant standard for cable modems, known as Data Over Cable Service Interface Specification (DOCSIS).

3.1.2 The Single-ISP Standard Gives Operators Control Over Content, Usage, and Private Information

In a closed single-ISP situation, the operator has the technical ability (and, in the absence of genuine facilities-based competition, the freedom) to manipulate data transmissions in numerous ways, of which many customers will not be aware. These include:

- Controlling speed and reliability of the connection to the Internet.

- Blocking certain types of usage such as:
  - virtual private networks (VPN), which can bridge a user to an office or corporate network.
  - usage of the cable modem by multiple computers attached to a user's home network.

[19] In contrast, "policy-based routing" (PBR) enables the router to recognize the packet based on other factors such as data path, including source address (source-based routing); content, such as e-mail text or digital media; Quality of Service; or the application associated with the data. ("Open Access: From Taboo to Take-off," David Iler, *Communications & Engineering Design*, April 2001, http://www.cedmagazine.com/ced/2001/0401/id3.htm.) PBR is described in detail below.

    - servers at user premises (used, for example, to host a personal web site or mail).
    - voice-over-IP over IP (VoIP), Internet-based voice services.

- Forcing customers to access the Internet over a certain home page selected by the operator for financial or political reasons (the user would not have the choice of selecting the home page to which their browser would open; rather, the browser would be programmed to open to the operator's selection each time the user used the Internet—this can be facilitated if the operator requires use of proprietary or customized software).

- Blocking access to the Internet under certain circumstances and forcing the user to use closed "on-line" services (also facilitated by requiring specific client software).

- Requiring customers to purchase an upgraded service package to be able to use restricted or high-bandwidth services such as telecommuting, video-conferencing, or imaging.

- Influencing and shaping customers' use of the Internet. The operator's economic interests lie in matching the user's usage to the technical capabilities and limitations of the cable modem system, such as limited "upstream" capacity (bandwidth from the user to the Internet)—therefore, the ISP may deliberately work to change users' preferences and expectations of network services. By limiting, slowing, or blocking the use of upstream capacity, the operator can turn the Internet into a web-browsing and downloading product for its customers, rather than a peer-to-peer service (enabling video-conferencing or other symmetrical high-bandwidth, real-time, two-way applications).

There is another way in which operators have control over content in a single-ISP scenario. The router's recognition of a destination address enables the operator to control data transmissions, without the knowledge of its customers, in order to further its own interests. For example, it may:

- Slow or block access to certain sites on the Internet, such as those without financial arrangements with the cable company's ISP, or those with content considered objectionable for political or competitive reasons.

- Speed transmission to an affiliated site (or a site that has paid the operator for the privilege of special treatment).

- Maintain records of the content of Internet sites visited by customers and addresses to which customers send e-mail.

3.1.3 Adapting the Single-ISP Standard for Multiple ISPs

The primary technical challenges associated with open access arise from modifying a system that was originally designed for one shared network operated by one company. Cable modems give users access to the Internet over modems arranged on a shared local area network (LAN) topology, in many ways similar to that by which computers share an office network.[20] The shared network topology creates technical difficulties in developing a platform in which multiple ISPs have equal footing, rather than the current situation, in which operators are accustomed to having sole access to their closed platforms. For example, an open access environment requires adaptation of such areas as backbone connectivity, offering of domain name services (DNS), bandwidth provisioning, customer service, and billing.

Nonetheless, these technical issues have been resolved such that the models described below are all viable, based on:

- Work done by equipment makers and vendors who implement these systems;
- Published reports of the work of the Canadian regulatory body overseeing the mandatory implementation of open access in Canada;[21] and
- Widespread industry experience with implementation of some of these models for analogous purposes.

3.2 Rebranding and Resale of Wholesale Services

Under this scenario, the competing ISPs contract with the cable operator to purchase wholesale services and resell them to consumers. Technically, and even practically, this model does not differ from the single-ISP standard. The drawbacks of this model therefore mirror many of the concerns involved with a single vendor system. The cable operator still handles the backbone connections, DNS, and routing. This allows the operator to control how content is handled on the network.

3.2.1 Technical Description of Rebranding

The rebranding model is employed in the Tacoma Click! network (described in detail in Appendix A), where three ISPs host services through dedicated T1 connections to the Click! headend. Initial managed access trials by Time Warner Cable are also closely related to this solution,[22] although TWC is also reported to be experimenting with the

[20] "Overview of Cable Modem Technology and Services," *Cable Datacom News*, http://www.cabledatacomnews.com/cmic/cmic1.html.

[21] See http://www.crtc.gc.ca/eng/publications.htm.

[22] "Special Report: Part II: Open Access – How to Provide a Full Menu of Choices," Natalia Feduschak, *Communications Technology*, May 2001, http://www.cabletoday.com/ct2/archives/0501/122_openaccess.htm.

policy-based routing model discussed below.[23] The rebranding solution is illustrated in Figure 4.

Figure 4: The Rebranding Strategy

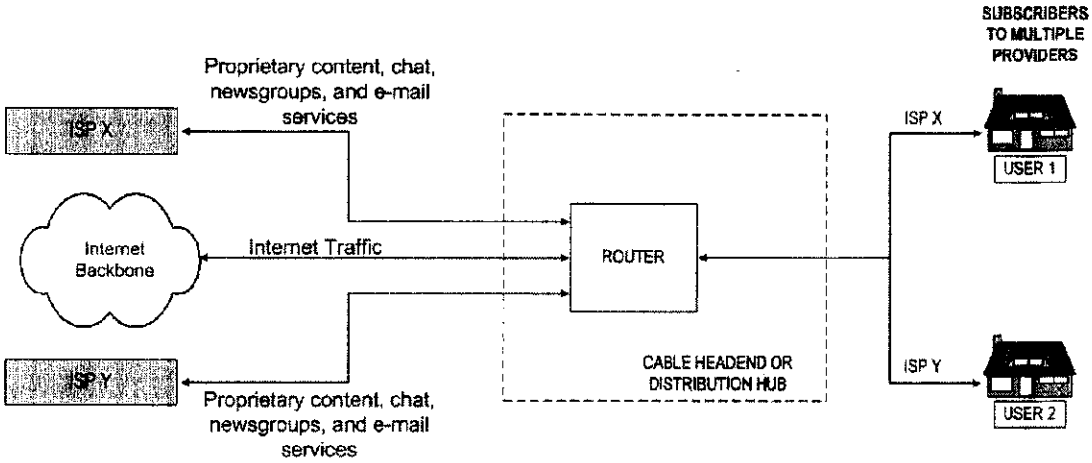

In this model, all users connect through the cable operator headend and equipment systems. Provisioning and signup are performed by the ISPs, who also handle all customer installation and service and serve as the point of contact for the subscriber. Although the cable operator handles the outdoor cable plant and actual connections to the Internet, these processes are invisible to customers, who interact only with their ISP.

All headend CMTS equipment is the responsibility of the cable operator, as are all routing and bandwidth management. Customer Internet traffic goes through the headend, directly to the Internet backbone.

In the Tacoma Click! Network (see Appendix A), ISPs connect to the headend to manage billing and to provide services such as e-mail, newsgroups, and hosting of customer Web sites. Customer service and subscriber installations are handled by the ISPs, who pay the cable operator for the opportunity to offer Internet service under their brand over the cable backbone.

3.2.2 Rebranding Duplicates the Problems of the Single-ISP Standard

Even though alternative ISPs are allowed access to the cable system, they are unable to offer any backbone Internet connection other than that provided to them for resale by the cable operator. They therefore must offer Internet access with the same restrictions and control over content that the cable operator offers through its own ISP. The end result of this rebranding scenario is that multiple ISPs offer the same Internet connection and restricted services as a single ISP in the single-ISP standard discussed above.

[23] Discussion between Andrew Afflerbach, CTC Principal Engineer, and Greg Collins, Earthlink Director of Network Engineering and Operations, November 6, 2001.

At best, competing ISPs who are allowed onto the system can bill and "own" their customers and offer their own mail, news, and chat services, because these applications can be differentiated between ISPs by login and password and different setups of browsers and client software. ISPs will presumably compete to deliver superior customer service, prices, and value-added services such as proprietary content, e-mail, and chat rooms, even though they do not have the option of competing to offer differentiated Internet connections.

3.2.3 Example of Rebranding: Tacoma, Washington

One example of a system that provides the rebranding form of open access is the Click! Network in Tacoma, Washington. Click! is a municipally run cable system that was "overbuilt" parallel to the existing cable infrastructure owned by AT&T, with which it competes. Click! customers contract with one of three ISPs. Click! installs the physical connection to the house and any internal wiring required. The user installs the modem or has the ISP install it. The ISP is responsible for the customer having the PC correctly configured and network interface card (NIC) installed. The ISP takes customer calls and is the point of contact with Click! in the event of a network problem. The ISP pays Click! a fee for using the network, and Click! pays for the Internet backbone connections.

The results of CTC's technical investigation of the Click! Network are described in Appendix A.

3.3 Operation of Separate Channels

A more "open" strategy for implementing a multiple-ISP network is for the various providers to operate their networks over separate channels of the cable system. This general approach has successfully been used by cable operators to separate business and Institutional Network uses from the residential cable modem network.

3.3.1 Technical Description of the Separate-Channel Strategy

The separate-channel solution is illustrated in Figure 5.

Figure 5: The Separate-Channel Strategy

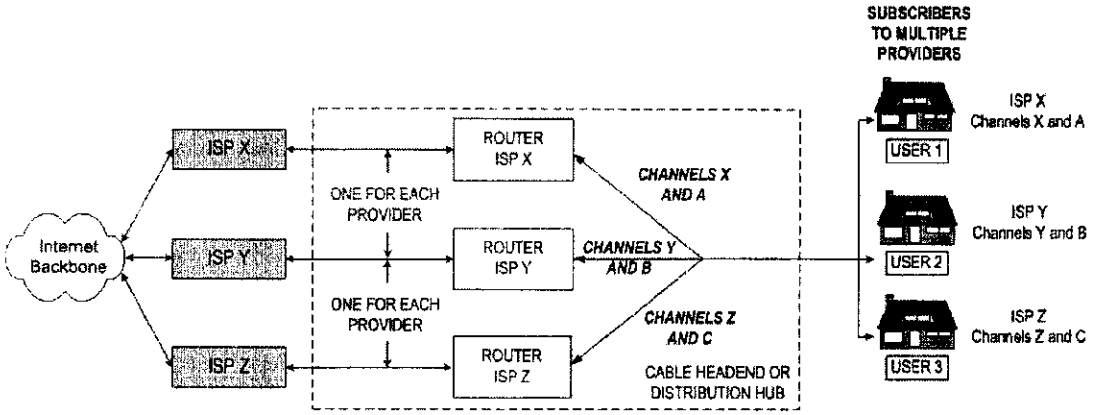

Under the separate-channel scenario, the ISPs share portions of the cable system the same way that the system is currently shared among separate video channels, such as HBO or The Weather Channel. The cable operator assigns to each ISP channel capacity in both the upstream and downstream directions. The exact choice of channels and process of assignment is negotiated between the cable operator and the ISPs.

Under this scenario, the cable operator is responsible for maintaining the physical network and hosting each ISP's equipment at its headend or distribution hubs. At the cable headend, each ISP maintains its own CMTS, its own router, its own server (if desired), and its own connection to the Internet and outside networks.

Implementation in the home should not be a hindrance to implementation of this solution. Cable modems could be provided to subscribers in a number of different ways. One possibility is for each ISP to be responsible for installation of modems for its customers. The ISP could also enable its customers to install the modems themselves. This solution would be relatively easy to implement from the consumer side, as is demonstrated by the wide availability of DOCSIS modems for retail purchase. The competing ISPs could provide "starter packages" at retail outlets, much as ISPs currently give away starter software to sign up new users. Alternately, the ISP could contract with the cable operator to install and configure modems and to set the modem up to communicate with the correct CMTS.

3.3.2 The Separate-Channel Solution Solves Many of the Problems of the Single-ISP Standard and Rebranding

The separate-channels approach facilitates the goals of open access because it allows for a clear demarcation between the operator and the various ISPs in the following ways, among others:

- The operator cannot control or manipulate content or speed as it can under the rebranding approach because there is no need for routing of traffic between the cable operator's system and ISPs.
- Each ISP decides what type of cable modem, router, and CMTS it wants to use.
- Each ISP operates its own management, security, billing, and routing.
- ISPs operate their systems with relatively little need for regular interaction once the cable operator negotiates what channels it will offer, and the ISPs agree on ground rules for access to the equipment, operational signal levels, installation, and handling of service complaints.
- There is clear apportionment of capacity and traffic between users of different ISPs.

3.3.3 The Separate-Channel Approach Also Has Significant Disadvantages

There are disadvantages to the separate-channel approach, however, including:

- Difficulty in assigning channels. Channels may be scarce, particularly in the upstream direction. Some of these upstream channels will provide poorer performance and reliability than others because of interference from amateur radio, electronic appliances, and other devices.

- Lack of flexibility and inefficient use of bandwidth. With the separate channel solution, the cable modem system loses the flexibility to suddenly switch channels in the event of interference, because the channels have been split up among separate providers. The number of ISPs is limited by the number of channels on the system, and the use of bandwidth among a varying number of providers and data channels would be inefficient.

- Expense. Duplication of CMTS equipment at headends and hubs also adds to expenses, both of equipment and of additional rack and floor space to house the equipment.

3.4 Policy-Based Routing

A third multiple-ISP strategy is for the subscribers of various ISPs to share the same channel or channels, but have the customers' traffic routed to separate providers, in a scenario known as policy-based routing (PBR).

Under PBR, customers' data packets are "tagged," and routed according to those tags, or "policies." The router can recognize customers' traffic based on one or more of a number of factors, including:

- The source address of the data packet; and

- The content of the packet (for example, whether it contains e-mail, video, or a certain type of application).

Like destination-based routing (see Section 3.1 above) PBR is made possible by the identifying numbers carried by data packets on the Internet. Under TCP/IP, packets are distinguished by numbers that identify, among other things, their content or "port" (TCP) and their address (IP). A policy-based router recognizes these numbers, or policies, identifies the packets, and then treats them according to how the router has been configured.

The advantage of PBR is that it enables more efficient use of scarce spectrum on the cable system than does the separate-channel solution. It also permits the cable operator to use "frequency-agile" techniques to switch channels to avoid interference. The number of ISPs is limited only by the capacity of the policy-based router. ISPs can each provide their own cached or affiliated content.

3.4.1 PBR Enables Practices Contrary to the Goals of Open Access

However, PBR's recognition of content, source, and other characteristics enables the operator of the router to block protocols, limit available bandwidth, and block sites with much greater range and flexibility than does destination-based routing. In addition to all the types of control possible with destination-based routing, PBR gives the operator even greater control over data transmissions, such that it may:

- Speed transmission to or from an affiliated site (or a site that has paid the operator for the privilege of special treatment);
- Similarly, slow or block transmission to or from a non-affiliated or non-paying site;
- Slow or otherwise obstruct traffic of customers of competitor ISPs while favoring the traffic of its own or affiliated ISPs;
- Slow or block content that is competitive of the operator's other products. For example:
    - voice-over-IP over IP services that compete with the operator's telephone service.
    - video transmissions that compete with the operator's video-on-demand offerings over the cable system.
    - video-conferencing transmissions that compete with the operator's own video-conferencing offering.
    - transmissions from Internet sports sites that compete with the operator's pay-per-view offering of a major sports event.
- Block content on the basis of political, ideological, or any other objection to content; and
- Maintain records of the content of customers' transmissions; Internet sites visited by customers; and e-mail correspondents of customers.

3.4.2 PBR Can Also Be Used to Enable Open Access

Yet PBR can also be used to facilitate open access. With source-based routing, for example, the router uses both the source IP address (the originating user's address) and the destination address. In an open access application, the source address identifies a user's data to the system as being the responsibility of that user's ISP. This enables the router to determine the ISP through which the data is to be directed.

Under this scenario, users' computers are assigned IP addresses that identify them as customers of a particular ISP. The cable operator is responsible for transporting data between modems and the headend and then for routing signals, using a policy-based router, toward the appropriate provider as indicated by source IP address.

Significantly, configuring a policy-based router to enable open access does not preclude the operator from also configuring it to enable all the controversial practices described above. PBR enables both approaches simultaneously and there is no simple technical solution to preclude such a configuration. Absent contractual or public policy limitations on the uses of PBR, operators are technically free to use their routers to control content, information, and access to the Internet.

3.4.3 Technical Description of PBR

In a PBR open access scenario, all Internet access or use of online services by an ISP's subscriber would route to an ISP's router. ISPs could connect the cable system through a variety of methods. In one scenario, a provider could locate its own separate data switching and routing devices at the headend and connect directly to the ports of the cable operator router or switch.

Having its own equipment at the headend would allow an ISP to have more control over its connection to the cable system and therefore over the content and service quality that its customers receive. In this scenario, the ISP could also locate servers at the premises, providing disk space, content, and caching services to users. This PBR model is diagrammed in Figure 6.

Figure 6: Policy-Based Routing with ISP Co-Location at Headend

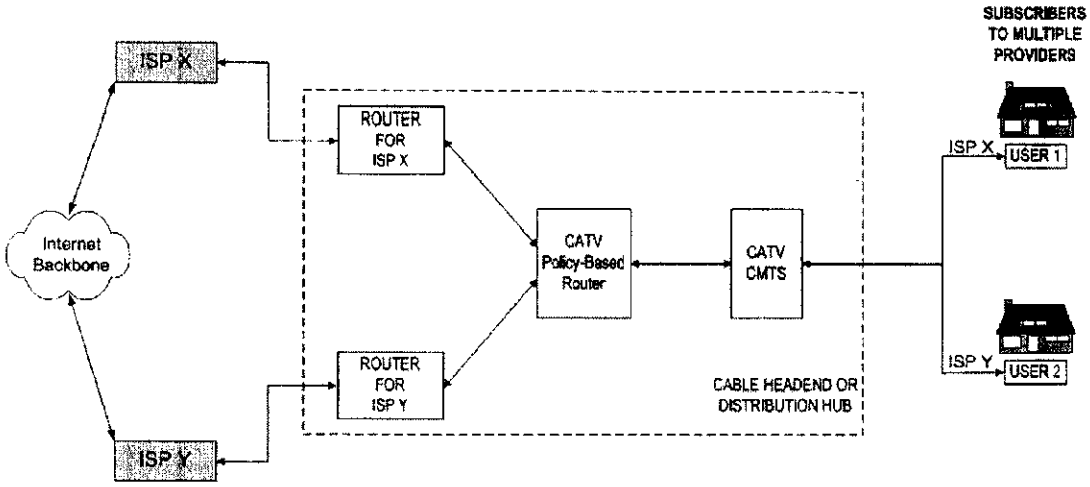

Purchasing dedicated headend routers and constructing physical plant may not be feasible for some ISPs. Rather than directly connecting to headend equipment, ISPs could handle user traffic by setting up dedicated circuits, virtual private, or public network connections between the cable headend and ISP over the Internet. The cable operator's policy-based router would forward customer transmissions through the Internet to the ISP, which would keep its routers and servers at its own offices. This PBR model is diagrammed in Figure 7.

Figure 7: Policy-Based Routing Over Internet

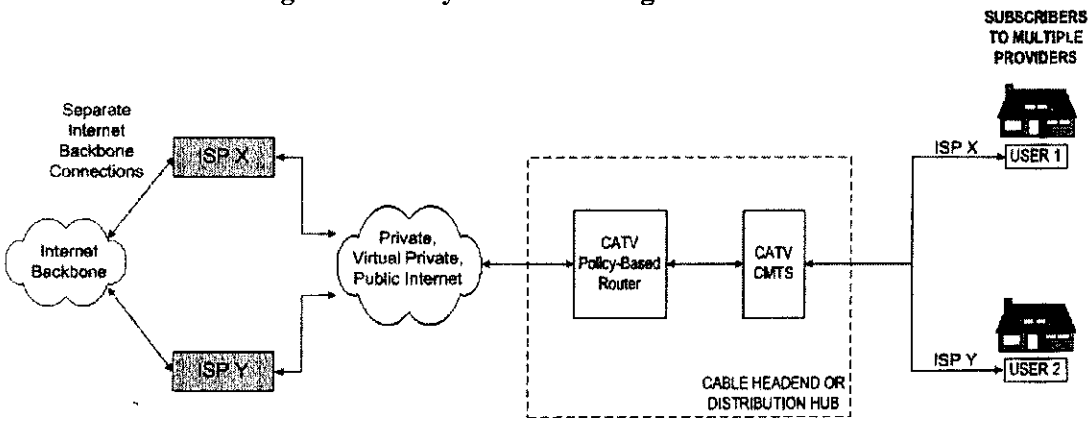

3.4.4 Respective Roles of ISPs and Cable Operators in PBR

ISPs are responsible for DNS, backbone connections between the ISP and cable operator, hosting of their own affiliated content, site caching, providing a block of IP addresses for customers, and serving as point of contact with the customer for support and billing.

The cable operator is responsible for management of the network from the headend to the modem. This responsibility includes operating and maintaining the headend, hubs, and

cable plant, authentication of users, and security of the data on the network between the user and the user's ISP.[24]

The cable operator bills an ISP either by customer or based on network usage and would potentially also charge ISPs for headend space or ports on a policy-based router. Setup of modem service will be accomplished by the cable operator and ISP.

Contrary to some expectations, under this approach consumers need not experience the difficulty and inconvenience generally associated with cable service calls. Rather, ISPs could, as with the separate-channel strategy, provide "starter packages" at retail outlets, which contain instructions and software for a user to add a cable modem to the provider's service on the cable system. However, there must also be coordination with the cable operator, so that the subscriber's cable drop is connected and the cable system recognizes the subscriber as an authorized user of the network and customer of the ISP. This can be accomplished through an automated provisioning process arranged between the ISP and cable operator or by requiring new users to contact the cable operator at the time of installation.

The ISP and cable operator must also coordinate the IP addresses the ISP provides to its subscribers. Any changes or expansion of the IP address block must also be coordinated.[25]

3.4.5 Service Provisioning

A multiple-ISP environment also requires addressing such issues as configuring the customers' computer and modem for service, customer support and troubleshooting, and billing customers. These activities generally involve interactions between different hardware and software systems both on an ISP-specific level and an overall system level.

Switching customers between ISPs can involve complex back-office operations. Ideally, transfers should be accomplished in a fashion that is as invisible to the user as possible. The less visible back-office interactions are, the easier it is for the users to exercise their options to select the ISP of their choice. This process involves developing an interface between the cable operator and ISPs in which the transfer of user identification data, service level, billing information, and IP allocation is accomplished seamlessly.[26] A number of companies are developing back-office applications for open access, including, for example, Alopa Networks.[27]

---

[24] "Third Party Residential Internet Access: Point of Interconnect Network Design," Tekton Internet Associates, Inc., prepared for Canadian Cable Television Association, http://www.crtc.gc.ca/cisc/COMMITTE/G&H-docs/HSOD001.doc.

[25] Ibid.

[26] "Open Access Service Provisioning," Abraham Gutman, *Communications and Engineering Design*, May 2001, http://www.cedmagazine.com/ced/2001/0501/05g.htm.

[27] Alopa Networks Products & Services, MetaServ Platform, http://www.alopa.com/msplatform.html.

3.4.6 ISP Connections to the Network

The cable operator and ISP need to coordinate how their networks will connect and how they will scale as the networks grow and in the event that the ISP's percentage use of network capacity changes. Additional CMTS ports or port management schemes are needed to accommodate increases in the number of cable modem users. As the usage of the cable modem network increases, so will the need for PBR capacity and capacity between the cable system and the ISP. If an ISP locates its equipment in a cable operator facility, the footprint of that equipment may need to increase as that ISP adds new customers or services. This may become particularly challenging with several ISPs in the facility.

Connections between the ISPs and the cable network can also be facilitated at peering points located outside the headend, perhaps at an Internet network access point, "carrier hotel," or telephone central office. This would allow ISPs to host local content and management systems directly connected to the cable headend while avoiding costly headend installation and expansion. Distribution of provider hardware locations reduces the overall cost for the cable operator and allows the ISP to have easier control of and access to their own equipment, although at the cost of reducing the closeness and reliability of their connection to the cable system.[28]

3.4.7 Quality of Service

Cable systems may be noticeably slowed during peak usage hours by the volume of usage. Data traffic jams become more common as more users sign on. ISPs and cable operators need to agree on a target capacity available to each user, and the cable operator needs to be responsible for segmenting its network or taking other measures to increase capacity per user if the agreed target capacity cannot be met.[29]

When DOCSIS 1.1 becomes available[30], a cable modem customer will be able to receive minimum and maximum service level guarantees.[31] The ISP will need to coordinate with the cable company its service offering to each customer with the appropriate configuration of that user's services on the cable system. For example, a customer who purchases 512 kbps downstream and 128 kbps upstream data services and telephone-over-IP from an ISP will need the cable operator to configure its CMTS and the user's modem for that service. The cable operator will also need to make sure that its PBR has the bandwidth and quality of service it needs for all customers of all ISPs on the network.

---

[28] "Third Party Residential Internet Access: Point of Interconnect Network Design," Tekton Internet Associates, Inc., prepared for Canadian Cable Television Association, http://www.crtc.gc.ca/cisc/COMMITTE/G&H-docs/HSOD001.doc.

[29] "The Cable Modem Traffic Jam," Walter Ciciora, *IEEE Spectrum Online*, http://www.spectrum.ieee.org/spectrum/jun01/features/cmode.html.

[30] DOCSIS, the standard for cable modems, is described in greater detail in Appendix C.

[31] "DOCSIS 1.1 Sounds All-Aboard SIGNAL." Craig Kuhl, *Communications & Engineering Design*, October 2001, http://www.cedmagazine.com/ced/2001/1001/id1.htm.

Finally, the ISP will need to ensure that its own backbone connection to the cable headend is adequate to support all of its users at the level they have subscribed. Specific services delivered to users upon request, such as video-on-demand and voice-over-IP, require immediate attention over the network for prompt and reliable programming transfer. The ISP must guarantee that its connection to voice and video providers have low latency.

3.4.8 Existing PBR Solutions: Juniper/Pacific Broadband

Juniper Networks manufactures high-end router equipment to provide open access solutions, including policy and source-based routing.[32] Juniper's routers forward data based on source and destination IP address, protocol number, source and destination port numbers, IP precedence value, other IP options, TCP flags, packet length, and incoming and outgoing logical or physical interface. These information fields can be read from the header of each data packet. These forwarding abilities allow the router to prioritize and direct data by users and their ISPs, as well as enabling the cable operator to apply service guarantees in its connection between the network and ISP.[33]

Juniper has implemented PBR, though it has not had the opportunity to do so for cable open access solutions, according to company representatives.[34]

Juniper is marketing a "simple, turnkey system for multiple ISP deployments"[35] with Pacific Broadband Communications (PBC).[36] This open access solution combines PBC's CMTS with Juniper's policy-based router. The combination extends Juniper's open access solution to the last mile of the network, according to company literature. The companies also maintain that the combined solution supports direction of multiple ISP traffic as well as multiple tier Quality of Service control for each ISP.[37]

3.4.9 Existing PBR Solutions: The Canadian Model

Various technology companies have devoted considerable design effort and development to the PBR solution, and complete designs for its implementation are being prepared by the Canadian Radio-Television and Telecommunications Commission (CRTC), the Canadian equivalent of the FCC.[38] The CRTC has formed a high-speed working group

---

[32] "Filter-based Forwarding – Technology Note," http://www.juniper.net/techcenter/notes/552003.html.

[33] Ibid.

[34] Telephone conversation between H. Augustin Cherng, CTC Staff Engineer, and Brad Ryan, Juniper Networks accounts manager, November 4, 2001.

[35] "Pacific Broadband Communications Introduces End-to-End MPLS Open Access Solution." http://www.pbc.com/news/press_11.28.01.html.

[36] PBC develops equipment to deliver standards-based data, telephony, and video over cable networks. Juniper announced its intention to acquire PBC in November 2001.

[37] "Pacific Broadband Communications Introduces End-to-End MPLS Open Access Solution." http://www.pbc.com/news/press_11.28.01.html.

[38] "Third Party Residential Internet Access: Point of Interconnect Network Design," Tekton Internet Associates, Inc., prepared for Canadian Cable Television Association, http://www.crtc.gc.ca/cisc/COMMITTE/G&H-docs/HSOD001.doc.

consisting of representatives of the CRTC, Canadian ISPs, and Canadian cable operators.[39]

The working group is developing a complete implementation plan for Third-Party Residential Internet Access (TPIA) using PBR. Many of its working documents are publicly available. Together, these documents outline a strategy for addressing the technical and business challenges of PBR, including routing of data, interface between ISP and cable operator, test procedures, customer billing, network management, response to end-user problems, tariff agreements for use of the cable networks, and procedures for adding, switching, and disconnecting subscribers.[40] Significantly, the Canadian cable industry is part of this working group and has participated in development of this plan.

[39] Specifically, the working group, which is known as CISC-HSWG, includes representatives of the Canadian Cable Television Association (CCTA), Canadian Association of Internet Service Providers (CAIP), AOL-Canada, Rogers, Shaw, and Videotron.

[40] A list of available documents can be found at http://www.crtc.gc.ca/cisc/eng/cisf3g8.htm and http://www.crtc.gc.ca/cisc/eng/CISF3G8G.HTM.