1020 Nineteenth Street NW
Suite 700
Washington, DC 20036
303 672 2821
fax: 202 293 0561

John W. Kure
Executive Director - Federal Policy and Law

Qwest

Ex Parte

August 2, 2002

Marlene H. Dortch, Secretary
Federal Communications Commission
445 12th Street, SW, Room TW-A325
Washington, DC 20554

Re: Developing a Unified Intercarrier Compensation Regime – CC Docket No. 01-92

Dear Ms. Dortch:

Yesterday, Craig Brown and I, both representing Qwest, met with Tamara Preiss, Jane Jackson, Jay Atkinson, Chris Barnekov, Alvaro Gonzalez, Margaret Dailey, Victoria Schlesinger and Robert Tanner of the Wireline Competition Bureau and Don Stockdale and Simon Wilkie of the Office of Plans and Policy. Qwest discussed its Bill and Keep at the ”Edge” concept as shown in the attached. Qwest believes the Commission, carriers and end users are better served by moving to bill and keep sooner than later.

Pursuant to FCC Rule 1.49(f), this Ex Parte is being filed electronically via the Electronic Comment Filing System for the inclusion in the public record of the above referenced dockets pursuant to FCC Rule 1.1206(b)(2).

Sincerely,

John W. Kure

cc: Tamara Preiss, Jane Jackson, Jay Atkinson, Chris Barnekov, Alvaro Gonzalez, Margaret Dailey, Victoria Schlesinger, Robert Tanner, Don Stockdale and Simon Wilkie (all via email)

Attachments

QWEST COMMUNICATIONS INTERNATIONAL, INC.

BILL-AND-KEEP AT THE "EDGE"

HOW THIS ALL WOULD WORK UNDER THE DEFAULT RULES

RECAP OF DEFAULT RULES

RESOLUTION OF INTERCARRIER COMPENSATION ISSUES

TRANSITING TRAFFIC

TRANSPORT BETWEEN THE EDGES

CONCLUSION

Bill and Keep at the "Edge"

Proposed Default Rules

The following rules one through four are only for use when interconnecting carriers have not been able to negotiate another agreement for the carriage of traffic between the two companies.

1. Each carrier is responsible for recovering the costs of its own network from its own subscribers with the exception of costs associated with transiting traffic. (Reply, fns.2, 11, 15, pp. 4,19)

2. Each carrier must establish the "edge" of its own network with an "edge" in each LATA in which it intends to receive/deliver traffic. At a minimum, the "edge" must be placed so that all switching type functions provided by the carrier are included within that carrier's network. (Reply, p. 19,)

   For a hierarchical circuit switched network, the "edge" will be at the access tandem location serving the subscriber's local switch. (Reply, pp. 21, 23, 24)

   For a non-hierarchical circuit switched network, the "edge" will be at the local switch location serving the subscriber. If no switch is located in the LATA to be served, an "edge" must be established in the LATA to be served with the cost of facilities between the local switch and the "edge" the responsibility of that carrier. (Reply, p. 24)

   For packet-switched, IP, and other advanced networks, the "edge" will be at any technically feasible point on the network. The other interconnecting carrier may choose any of these points as the "edge" with which it will interconnect. (Reply, pp. 23, 24)

   For an IXC, the "edge" will be the points of presence (POP) in each LATA. (Reply, fn. 15)

3. The originating carrier is responsible for paying for the cost of facilities transporting traffic from its "edge" to another carrier's "edge". Such cost will be recovered from the originating carrier's subscribers. (Reply p. 26)

4. In the case where an originating carrier utilizes a transiting carrier for transport from its "edge" to another carrier's "edge", the transiting carrier will charge due compensation to the carrier originating the traffic to the transiting carrier for all costs of transit to the IXC's or terminating carrier's "edge". The originating carrier will recover such costs from its own subscribers. (Reply fn.15)

5. Industry accepted engineering standards will be used to size transport, direct and overflow trunk groups, with the provisioning of trunks at a higher service level a cost borne by the carrier requesting the additional trunks. Where traffic volumes justify direct trunk groups to a particular local switch, the interconnecting carrier must segregate such traffic into its own trunk group for interconnection at the local carrier's access tandem location and routing direct to the local switch. (Reply p. 27)

6. Overflow trunks between local switches and their access tandem cannot be segregated between an ILEC's affiliate IXC and its competitors. (Reply, p. 30)

7. Subscriber pricing by ILECs for toll access service may not be presubscribed interexchange carrier specific. (Reply, p. 29)

(Items 5 through 7 were added in response to IXC concerns about discrimination and ILEC concerns that their entire networks could end up re-engineered in an inefficient manner.)

HOW BILL-AND-KEEP AT THE "EDGE" RESOLVES INTERCARRIER COMPENSATION PROBLEMS

Issues Identified in the Notice

1. Arbitrage due to the hodgepodge of compensation schemes applying to different types of traffic between different types of carriers.

    - Bill-and-keep at the "edge" applied uniformly to all traffic and all providers will replace the current hodgepodge of compensation schemes and thereby greatly eliminate resulting opportunities for arbitrage. In particular, under bill-and-keep at the "edge," no access or reciprocal compensation charges will be assessed.

2. Terminating access monopoly problem.

    - Bill-and-keep at the "edge" will eliminate the terminating access monopoly problem because access and other intercarrier compensation charges will be eliminated with terminating carriers recovering those costs from their own end user subscribers.

3. Should different types of networks require different interconnection rates?

    - Under Qwest's bill-and-keep at the "edge" proposal, each carrier will recover its own network costs from its own subscribers and intercarrier compensation charges between carriers will not apply (except for transiting charges).
    - No carrier will subsidize the inefficient network of another provider.
    - Any differences between carriers in prices to end users will be based on that carrier's own network costs.

4. Inefficient intercarrier compensation rules distort the structure and level of end-user charges.

    - Qwest's bill-and-keep proposal will align subscriber charges with the network costs of the subscriber's service provider, thereby eliminating the subsidies currently resident in averaged toll rates based on disparate access charges and bringing subscriber charges into compliance with the requirements of the Telecommunications Act to eliminate implicit subsidies.

5. Inefficient intercarrier compensation rates may distort the way in which an entity portrays itself as a network or an end-user customer.

    - Bill-and-keep at the “edge” will eliminate the most egregious examples of inefficient interconnection (e.g., ISPs behind CLECs), though there may still be incentives for entities to try to advantage themselves by designating themselves as either a carrier or an end user. Carriers obviously should not be allowed to connect as end users, and entities that might try to interconnect as a carrier should be obligated to assume all of the responsibilities of a carrier.

Other Application Issues:

1. CMRS – ILEC

   Wireless Major Trading Area (MTA) versus ILEC Local Calling Area (LCA) as geographic determinant for applicability of access charges or reciprocal compensation.

   - Currently much confusion regarding when a call is "local" and therefore subject to reciprocal compensation, rather than access charges.
   - Under bill-and-keep at the “edge”, each carrier will recover the costs of its own network from its own end users.
   - As a result, disagreements over the applicability of reciprocal compensation or access charges will be eliminated.

   CMRS providers and small ILECs often interconnect via transiting ILECs.

   - Because CMRS providers and small ILECs frequently do not interconnect directly, they may find it difficult to identify the other party, much less negotiate an interconnection agreement with that party. Moreover, in many cases the carriers exchange such limited amounts of traffic that it is not efficient to negotiate individual agreements.
   - There have been allegations that some ILECs require calls to CMRS provider customers to be made by dialing 1+ or 0+, forcing the call to go via IXC, thus allowing the ILEC to charge access charges to the IXC and the IXC to charge toll charges to the ILEC end user rather than the ILEC charging its end user toll charges, if appropriate, and paying reciprocal compensation to the CMRS provider.
   - Since bill-and-keep will eliminate access and reciprocal compensation charges, there will be no need for such parties to negotiate interconnection.
   - Because each carrier will directly interconnect with the transiting carrier, there will also be no need to negotiate the transport between their “edges.” The transiting carrier will have a relationship with both the originating and terminating carriers and effectively become the transport provider between them.

2. CMRS -- IXC

   The primary issue of dispute between CMRS providers and IXCs when they directly interconnect is the applicability and level of access charges.

   - With the implementation of bill-and-keep at the “edge,” all access charges will be eliminated.

3. CLEC -- IXC

Because CLECs and IXCs often do not directly connect but interconnect through another local exchange carrier, typically a large ILEC, IXCs and CLECs may find it difficult to establish interconnection agreements for the purpose of assessing access charges.

- Bill-and-keep at the “edge” will solve this problem by eliminating access charges.
- Moreover, because the transport between the “edges” is provided by another local exchange carrier, the CLEC and IXC do not have any need to establish interconnection agreements between themselves.
- Because such CLECs and IXCs will physically interconnect with the intermediate carrier, they will need to enter into agreements with the intermediate carrier for transit of their traffic to other carriers. The intermediate carrier will charge each carrier for hauling its originated traffic to the other carrier. In this case, the transport is provided by the intermediate carrier.
- In the case of CLECs and IXCs that directly interconnect, no access charges will apply but the carriers will have to negotiate the transport between them or default to Rule 3, under which the originating carrier is responsible for the cost of transporting traffic to the other carrier's "edge".

4. Small ILEC -- IXC

Small ILECs and IXCs often do not directly interconnect, but rather interconnect through another carrier, typically a large ILEC. Over time this has resulted in both the small ILEC and the intermediate carrier billing access charges to the IXC under the meet-point billing concept. Small ILECs typically have much higher switched charges than do larger ILECs contributing to the subsidy structure inherent in the IXC rate averaging and integration rules.

- While the meet-point billing process works, bill and keep at the “edge” would eliminate access charges and simplify this situation.
- By moving to bill and keep at the ”edge” and accordingly eliminating switched access charges, the current disparities in cost (in the form of differing access charges) for an IXC to receive and deliver to different ILECs will be greatly reduced.
- In the case of small ILECs and IXCs directly interconnecting, no access charges would apply but the carriers would have to negotiate the transport between them or default to rule three requiring the originating carrier to incur responsibility for the costs of delivering traffic to the other carrier’s “edge”.

Transiting and Bill-and-Keep at the “Edge”

1. As noted above, bill and Keep at the “edge” will eliminate the need for carriers that exchange traffic via a transiting carrier to enter into interconnection arrangements.

   The transiting carrier will have a relationship with both parties and will be providing the "transport" between their edges.

2. Although, bill and keep at the “edge” will eliminate the cumbersome accounting, tracking and billing needed today to assess reciprocal compensation and access charges, originating and terminating carriers may still have to establish relationships for such things as obtaining end user billing information.

Expectation

In a competitive market, various carriers will be expected to enter the transit market. Such entry should be a choice, not a requirement, for carriers.

TRANSPORT BETWEEN THE EDGES

As a default, delivering traffic to the other carrier's "edge" is preferable

- Very consistent with the role and rules for a transiting situation. While transiting will not be the typical situation for most of the traffic between carriers, it will be involved in most of the interconnections between CMRS providers, CLECs, small ILECs and other carriers.
- Clearly defines a starting point for negotiations. If unable to negotiate something else, clearly defines responsibilities
- Most carriers will use the default to facilitate the negotiation of something that is mutually beneficial including jointly sharing the cost of the transport
- Clearly sets up what will happen in the case of one way traffic.

- Negotiated options for transport in addition to default include:

  a) Each build to a mutually agreeable meet point.
  b) One of the two carriers builds the facility and sells agreed upon portion to other.
  c) One of the two carriers builds the facility and leases agreed upon portion to other.
  d) Carriers hire third party and split costs.

- Because two-way trunk groups are generally more efficient that one-way groups, it is expected that negotiated transport will be two-way and sized according to standard trunk group engineering criteria.

- Interconnecting carriers should not be required to go through a bidding process in determining least cost routing but should be free to negotiate the use of existing facilities or installation of new facilities at their discretion, with one or the other building the facility, each one building to a negotiated meet point, or the involved parties choosing to utilize a third party vendor splitting the costs in a manner determined during negotiations.

Conclusion

End users, carriers and regulators are best served by moving to bill and keep at the "edge" sooner rather than later.

Until the Commission adopts a comprehensive and uniform bill-and-keep regime, it will continue to expend considerable resources resolving individual issues arising under the current patchwork of intercarrier compensation rules. Such resolutions will likely be less than completely satisfactory and risk creating new unforeseen problems. The Commission's time is better spent designing a new paradigm for intercarrier compensation that would eliminate the major problems inherent in the current system.

The Commission should move to the new paradigm without waiting for the expiration of the various transition plans now in place.

Default Transport Rule
Originating Carrier Responsible for Delivery of Traffic to Other Carrier's "Edge"

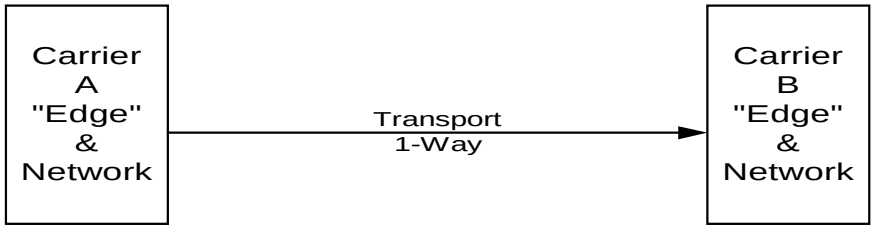

Carrier A recovers costs of transport from its subscribers

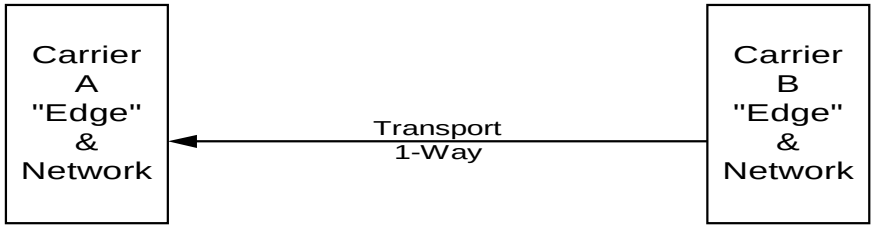

Carrier B recovers costs of transport from its subscribers

CMRS-ILEC

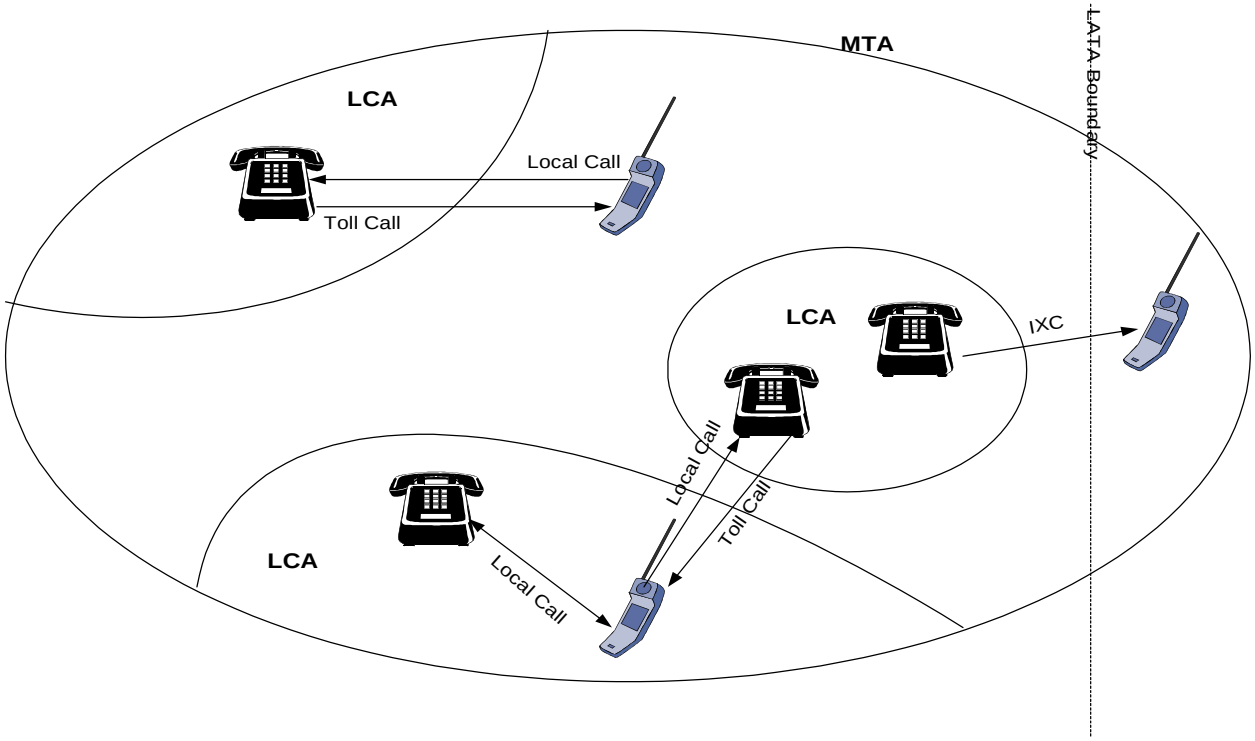

- Often multiple Local Calling Areas (LCAs) in Major Trading Area (MTA).
- All wire**less** calls originating and terminating within MTA are considered local calls by wireless provider.
- All wire**line** calls originating and terminating within an LCA are considered local calls by wireline provider.
- Wire**line** calls originating in an LCA and terminating outside the LCA are considered toll calls by the wireline provider.
- Each type carrier (wireless or wireline) charges the end user as appropriate for calls originated by its end user.
- Qwest ILEC wireline calls to wireless subscriber within MTA but outside LATA of originating caller must be carried by IXC and will be subject to access charges.
- All other calls depicted are subject to reciprocal compensation between the LEC and CMRS provider

Transit Default

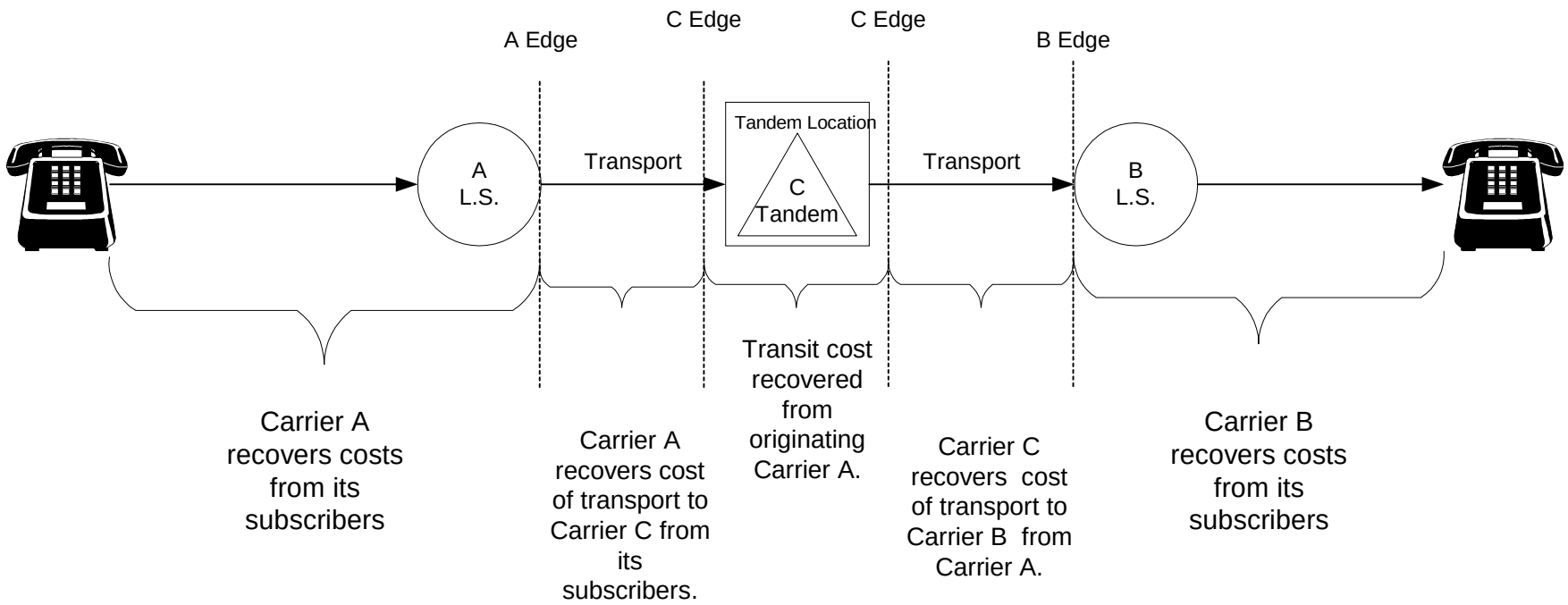

•Calls between small ILECs, CLECs, CMRS providers and IXCs that utilize a transit provider

•Carriers A and B can be any combination of small ILEC, CLEC, CMRS and IXC

Default Transport Rule
Originating Carrier Responsible for Delivery of Traffic to Other Carrier's "Edge"

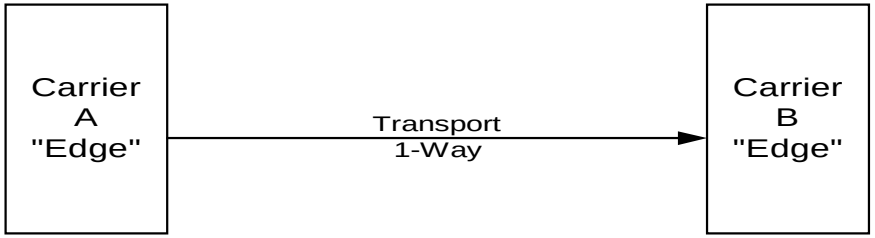

- Carrier A builds transport itself or contrct with third party vendor to build transport and recovers costs of transport from its subscribers
- Carrier B builds transport and sells or leasese it to Carrier A which recovers costs from its subscribers

Likely Negotiated Two-Way Agreement

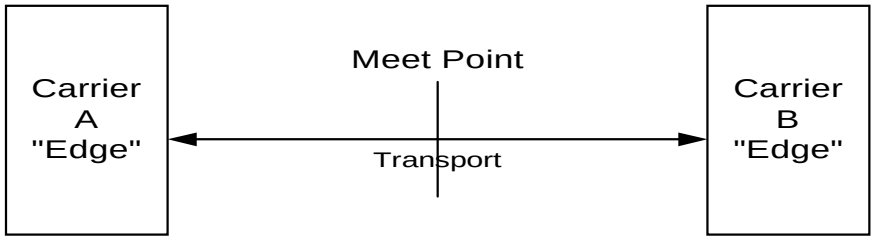

- Costs split based on negotiations between Carriers A and B and recovered from each carrier's respective subscribers.
- Carrier A & B each build to meet point
- Carrier A builds and Carrier B buys or leases facility to meet point.
- Carrier B builds and Carrier A buys or leases focility to meet point.