Transport Competition and Circuit Grooming

CC Docket Nos. 01-338, 96-98, 98-147

WorldCom, Inc.

September 30, 2002

Local Transport Networks

- ILEC interoffice facilities
  - Connect end user wire centers with WorldCom serving wire centers where WorldCom self-provides or purchases entrance facilities.
  - Thus allow WorldCom to provide end users with a host of voice and data services.
- WorldCom fiber-based collocations
  - Allow WorldCom to eliminate ILEC interoffice facilities that connect particular wire centers to the wire center where WorldCom would otherwise obtain entrance.
  - Do not replace ILEC facilities between the collo site and other wire centers where WorldCom does not have facilities, but does have customers.

ILEC IOF Optimization

Elimination Of T1-Billed Mileage

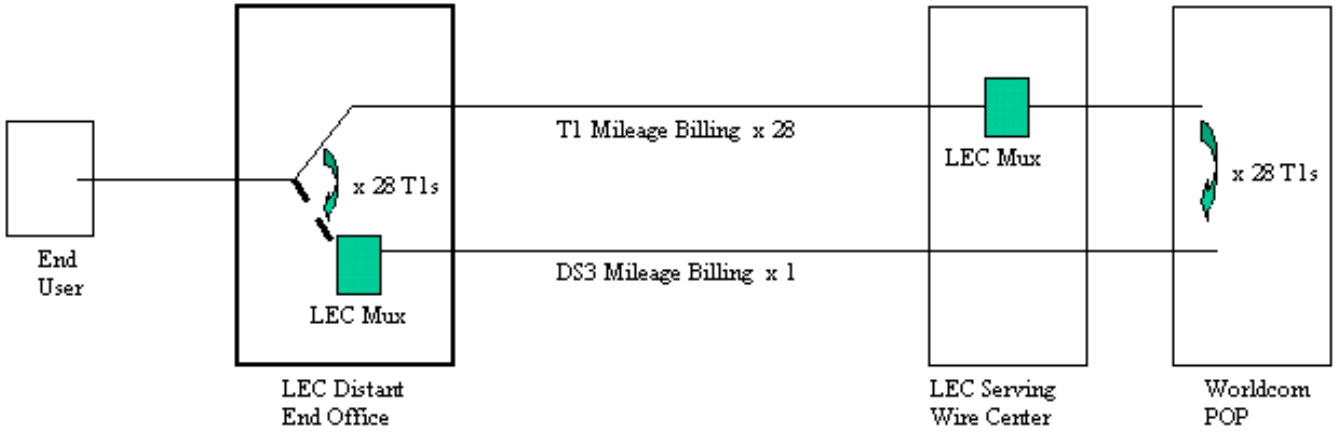

Each T1 "Groom":

- Replaces T1 inter-office fixed/variable transport charges with one DS3 charge.
- Breakeven: 8-10 T1s
- *Incurs One-Time Fee Paid to LEC*
- Typical Savings: $175-225 Per T1, After Cost of Interoffice DS3

ILEC IOF Optimization

Fiber-Based (Collocation)

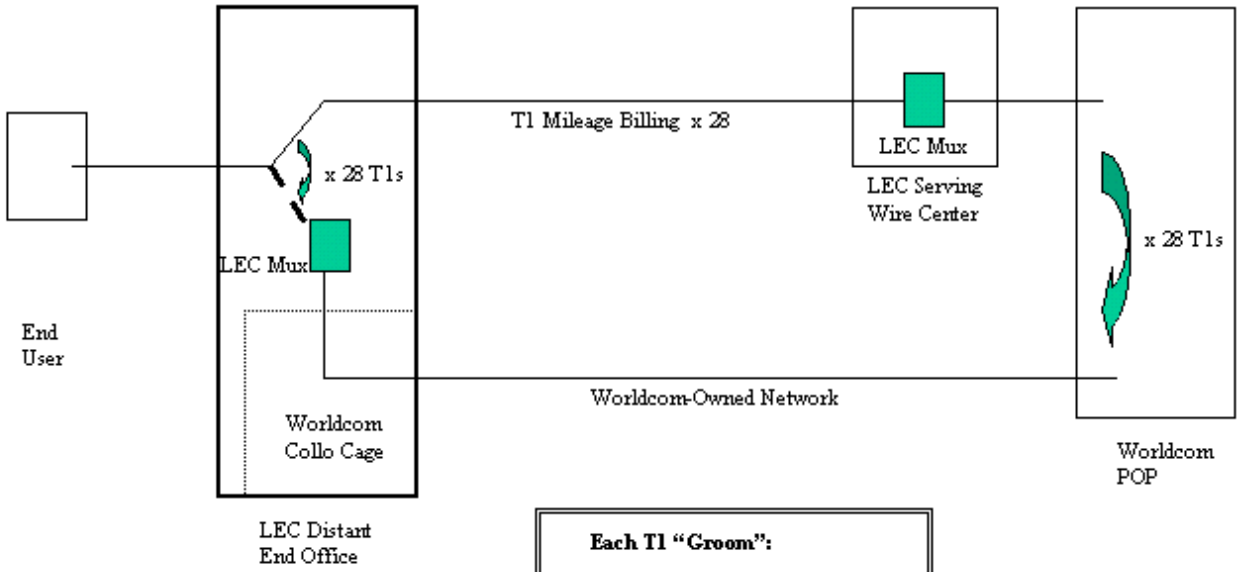

Each T1 "Groom":

- Eliminates IOF Fixed Mileage
- Eliminates IOF Variable Mileage
- *Incurs One-Time Fee Paid to LEC*
- Typical Savings: $250-325 Per T1, (No LEC DS3 Required)

Overview of Grooming Process

- Preparation
  - WorldCom orders new DS3 from LEC
  - WorldCom submits "groom" orders
  - ILEC schedules cutover date
  - Worldcom notifies customer of planned change
- Implementation
  - ILEC and WorldCom Operations coordinate via phone
  - Technicians test new path
  - Parties simultaneously patch circuit to new path
  - Customer end loop not affected (reused)
- Post-Conversion
  - ILEC and WorldCom deactivate original path
  - ILEC bills WorldCom one-time charge to cover labor

Circuit Migrations Critical

- Annual Domestic Access Bill: $7B+
- Once WorldCom collocates, critically important that circuits on ILEC interoffice facilities are "groomed" onto newly extended WorldCom fiber.
  - Otherwise, WorldCom does not obtain the benefit of its investment (Over $100M June 2002 – Sept 2003)
  - Future Investment Discouraged
- Circuit grooms require the cooperation of the ILEC (which has a powerful incentive not to cooperate).

Grooming Performance of SBC and Verizon is Woeful

- SBC and Verizon have placed unreasonable limits on the number of circuits they will groom.
  - In Ameritech region, SBC will perform only 600 grooms/month. Verizon will perform only 700/month throughout Verizon East.
  - Result is a significant backlog of ungroomed circuits for which WorldCom continues to pay ILEC access charges. (Approximately 40 months of backlog for SBC; approximately 38 months for Verizon.)
  - Worldcom is blocked from realizing return on investment
  - Problem will only get worse if WorldCom expands its network. As a result, WorldCom is considering a significant reduction in the number of additional collocations planned for this year.

Remedy

- Arbitrary limits imposed by SBC and Verizon are poisonous to transport competition.
- SBC and Verizon must agree to groom at least 2200 circuits/month.
  - Other ILECs perform at roughly this level.
- SBC and Verizon should provide bill credits for circuits that are not groomed by the requested date.
  - Such a policy would better align ILEC incentives with the Commission's goal of facilities-based competition.

Conclusion

- Competitive transport networks are capable of providing an alternative to some, but not all ILEC interoffice facilities in metropolitan areas.
- The success of transport competition depends critically on ILEC cooperation with competitors. SBC and Verizon are thwarting, not facilitating, transport competition.