Jay Bennett
Executive Director –
Federal Regulatory

SBC Communications, Inc.
1401 I Street, N.W., Suite 1100
Washington D.C 20005
Phone: (202) 326-8889
Fax: (202) 408-4801

October 21, 2002

VIA ELECTRONIC SUBMISSION

Ms. Marlene H. Dortch
Secretary
Office of the Secretary
Federal Communications Commission
445 12th Street, SW
Washington, DC 20554

Dear Ms. Dortch:

Re: **ERRATUM**
Memorandum of Ex Parte Communication
CC Docket No. 01-338, Review of the Section 251 Unbundling Obligations of Incumbent Local Exchange Carriers

CC Docket No. 96-98, Implementation of the Local Competition Provisions in the Telecommunications Act of 1996

CC Docket No. 98-147, Deployment of Wireline Services Offering Advanced Telecommunications Capability

Attached please find the corrected version **of Ex Parte Communication of SBC Communications Inc.** in the above referenced dockets. Please accept this document for filing in lieu of the Ex Parte Communication submitted in the Commission's Electronic Comment filing System on October 18, 2002.

Please call me if you have any questions regarding this matter.

Sincerely,

Jay Bennett
Executive Director –
Federal Regulatory

SBC Communications, Inc.
1401 I Street, N.W., Suite 1100
Washington D.C 20005
Phone: (202) 326-8889
Fax: (202) 408-4801

October 18, 2002

VIA ELECTRONIC SUBMISSION

Ms. Marlene H. Dortch
Secretary
Office of the Secretary
Federal Communications Commission
445 12th Street, SW
Washington, DC 20554

Dear Ms. Dortch:

Re: **Memorandum of Ex Parte Communication**
CC Docket No. 01-338, Review of the Section 251 Unbundling Obligations of Incumbent Local Exchange Carriers

CC Docket No. 96-98, Implementation of the Local Competition Provisions in the Telecommunications Act of 1996

CC Docket No. 98-147, Deployment of Wireline Services Offering Advanced Telecommunications Capability

On October 17, 2002, representatives of SBC met with members of the Wireline Competition Bureau regarding the Commission's Triennial Review proceeding, including the appropriate regulatory treatment of switching, transport and Broadband facilities. Commission staff in attendance were William Maher, Michelle Carey, Tamara Priess, Tom Navin, Scott Bergmann and Steve Morris. James Smith, Don Cain, Gary Phillips and the undersigned participated in the discussions on behalf of SBC. SBC's presentation focused on the following points:

- CLECs are not impaired without access to unbundled switching.
- The UNE-P obligation should be eliminated. It undercuts investment and is financially unsustainable for ILECs. A reasonable transition for the embedded base is appropriate.
- Competitive deployment of high capacity loops and transport (DS1 and above) obviates the need for unbundled access to these facilities.
- ILECs are not the dominant provider of Broadband and should not be subject to unbundling for Broadband facilities.
- FCC should create a national pre-emptive framework.

The attached materials were used during the meeting.

Pursuant to Section 1.1206(b) of the Commission's rules, this *ex parte* is being electronically filed. I ask that this *ex parte* be recognized with the proceedings identified above.

Please call me should you have any questions.

Sincerely,

Jay Bennett

Attachments

cc (w/o attachements): W. Maher
T. Navin
T. Preiss
M. Carey
S. Bergman
S. Morris

Triennial Review

October 17, 2002

Overview

- UNE-P obligation should be eliminated. It undercuts investment and is financially unsustainable for ILECs.
  - A reasonable transition for the embedded base is appropriate.
- CLECs are not impaired without access to unbundled switching.
- Competitive deployment of high capacity loops and transport (DS1 and above) obviates the need for unbundled access to these facilities.
- ILECs are not the dominant provider of Broadband and should not be subject to unbundling for Broadband facilities.
- FCC should create a national pre-emptive framework.

UNE-P Proliferation

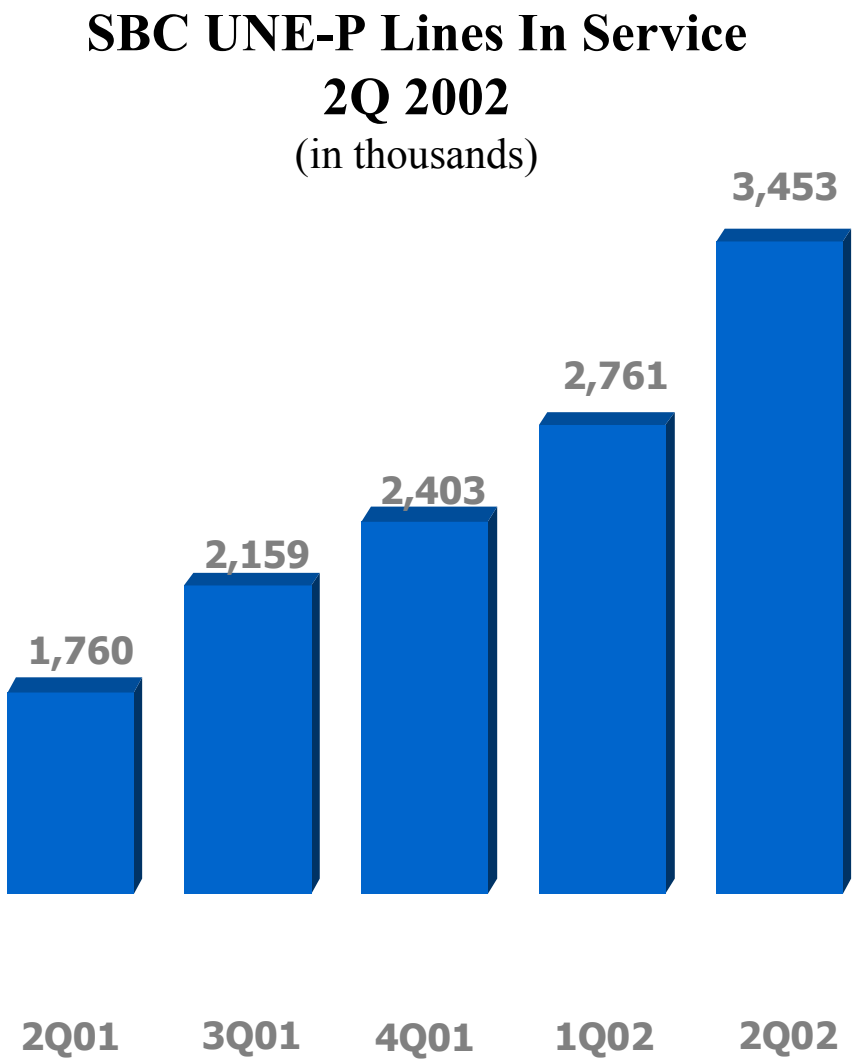

- Over the past year, UNE-P lines in service have doubled.
- We have lost 3.5 million lines… nearly equivalent to losing the state of Ohio.
- SBC still has 1 million resale lines likely to be converted to UNE-P.
- SBC's market share is currently 85%. Projected to be 66% by end of 2003.

Residential Customers Are the Primary Target for UNE-P in SBC Territories

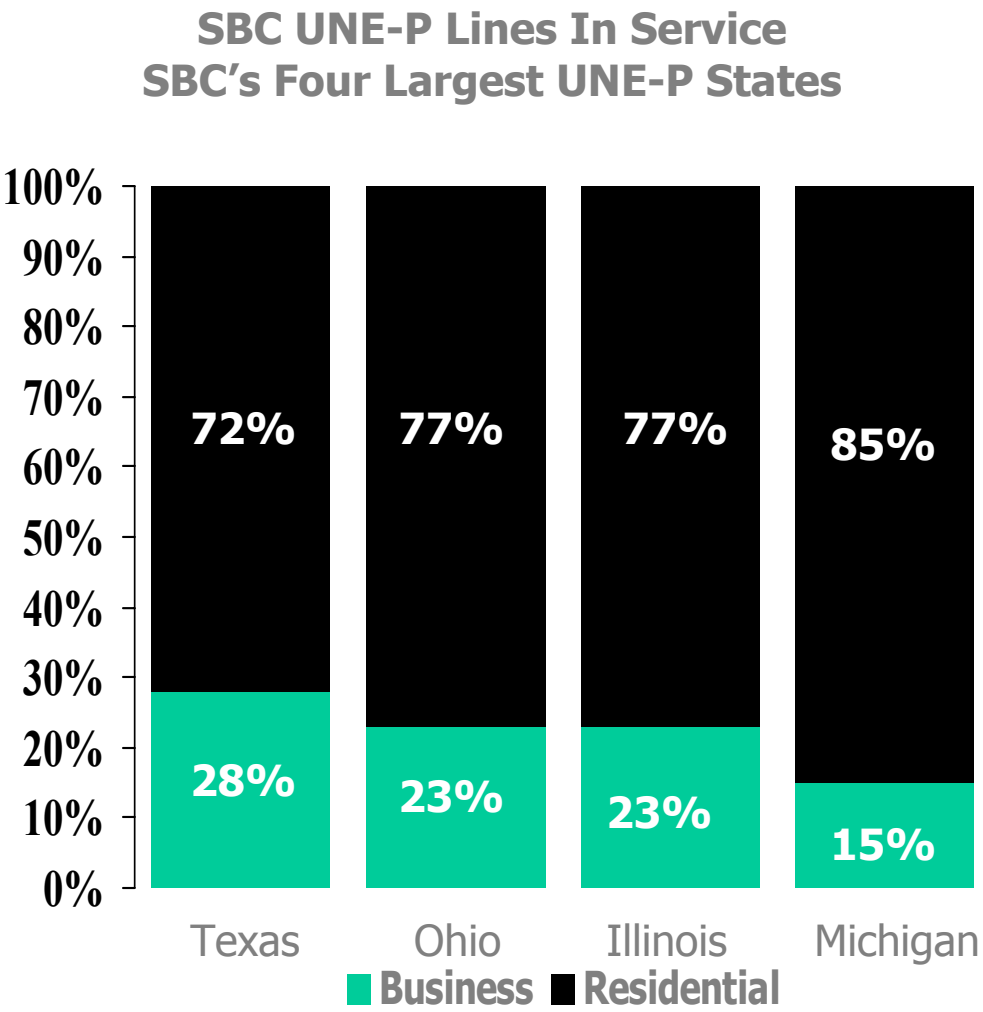

- Across SBC's 13 states, more than 70% of all UNE-P lines are residential
- In SBC's four largest UNE-P states, which have been targeted most aggressively by the large IXCs, residential customers represent an even higher percentage of total UNE-Ps.

UNE-P Predominantly Used by the Two Largest IXCs

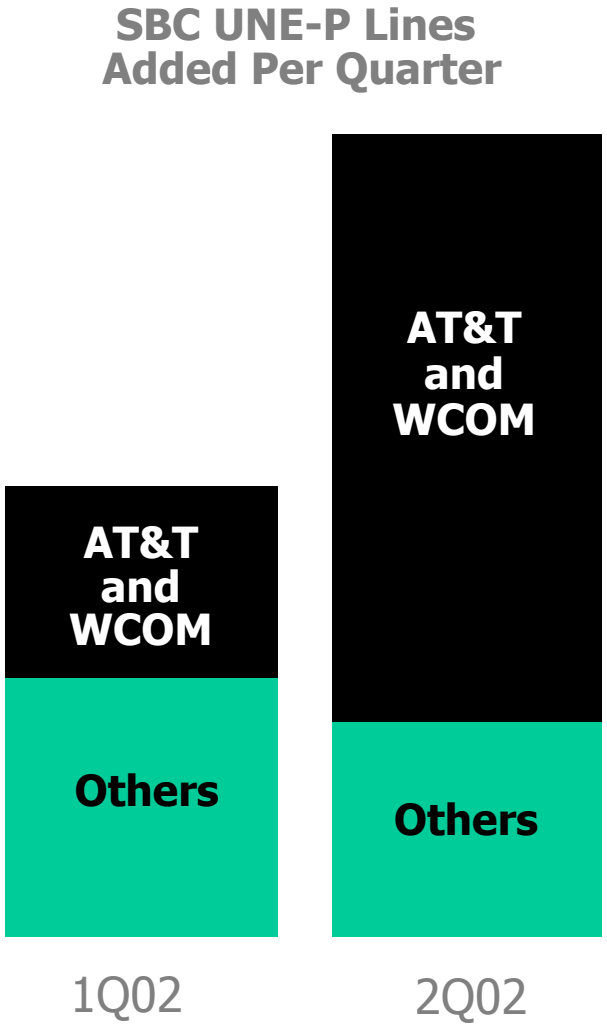

- More than 70% of SBC's UNE-P lines added in 2Q02 were for the two largest IXCs.
- From 1Q02 to 2Q02, UNE-P lines added for AT&T and WorldCom/MCI tripled while UNE-Ps added for others actually declined.

Simple Margin Transfer With No Investment

Ameritech Consumer 5-State Averages

	SBC Retail	SBC UNE-P	IXC Using SBC UNE-P
Revenue	$36	$15	$41
Expenses	*$26	*$26	**$23
Operating Margin	$10	$(11)	$18
Capital Investment	$1,100	$1,100	$0
Capital Investment	✓	✓	☐
Service Quality Regulated	✓	✓	☐
Universal Service Provider	✓	✓	☐

* Excludes cost associated with data services.

** UNE-P plus 20% SG&A.

SBC Provides Residential Universal Service While IXCs "Cherry Pick" Profits

IXC offers target premium customers rather than universal service.

Ameritech Residential Customer Spending

		Ave Rev per Line	% of Total SBC Revenue	% of Total SBC Profit
IXCs	Quartile 1	$43-$54	36%	72%
IXCs	Quartile 2	$36-$43	29%	41%
SBC	Quartile 3	$24-$36	21%	9%
SBC	Quartile 4	$0-$24	14%	(22)%

SBC's resulting customer base will be unprofitable, with no funds for investment.

Competitive Switches Are Widely Deployed & Used

- CLECs have deployed 1,300 circuit switches (Fact Report, II-1 & Appendix B)
  - 200+ CLECs of all sizes have deployed local circuit switches in the BOC regions (Fact Report, II-1)
- CLEC switches reach customers representing 86% of BOC access lines. (Fact Report, II-6)
- In addition to the circuit switches, more than 9,500 CLEC packet switches provide further competition (ALTS Local Competition Report 2002, page 16)

Hot Cut Overview

- SBC provisions hot cut orders on a timely basis, with minimal disruption to end users.
- SBC has a proven record of performance as FCC has found in 271 proceedings and as evidenced by data filed in this proceeding.
- Moving forward, SBC has the capacity to meet any reasonably foreseeable increase in demand for stand alone unbundled loops at the same superior level of performance.
  - A small portion of SBC Central Office workforce is involved in the hot cut process. This allows SBC to allocate additional resources, as needed, to meet any spike in demand.
  - SBC maintains flexibility with regard to staffing, making adjustments and reallocations of work force among as necessary to support changes and/or spikes in work load volumes and staffing requirements.
  - Proven historical response to changes/spikes in Hot Cut volumes.
  - SBC can accommodate increases in hot cut activity in individual COs as well as on a regional basis.

Alternative Local Fiber is Widely Available

- All but nine of the top 100 MSAs are served by at least three CLEC fiber networks.
  - In *USTA*, the D.C. Circuit, noting that 47 of the top 50 areas had 3+ transport competitors, questioned how CLECs could be impaired where an element is "significantly deployed on a competitive basis." Slip Op. 13.
- 1,800 CLEC fiber networks in the 150 largest MSAs, which contain 70% of the US population.
- Competitive carriers have deployed at least 184,000 fiber route miles (much of which is local). ALTS claims the number is 339,000.
- CLECs have connected fiber to 380,000 commercial office buildings nationwide

A Vibrant Wholesale Fiber Market Exists

- Wholesale suppliers provide a real alternative to ILEC fiber. For example:
  - FiberLoops.com, a fiber clearinghouse, lists competitive fiber for 175 cities, identifies fiber hotels, and has developed a directory identifying 2000 local fiber networks from over 100 different companies.
  - American Fiber Systems - offers a 'turnkey' fiber solution.
  - Utilities possess one-third of the nation's fiber infrastructure and rights-of-way, which they supply to carriers. Half of new metro networks are being built by utilities.
- These suppliers connect end users to fiber rings, IXC pops, and ILEC Central Offices.

AT&T's two stories on Competitive Fiber

- According to its president, David Dorman, AT&T alone has "built 18,000 route miles of fiber in 90 cities and . . . [has] 7,000 buildings on net and that's growing every day." Mr. Dorman further has boasted that "over 20 percent of our T1-equivalent services are on net and we're growing that every day with a real focus at a grass roots, granular level, building-by-building, address-by-address, of moving customers over."
- AT&T claims BOCs have market power for special access based largely on rate of return data derived from ARMIS reports
  - AT&T's data is based on archaic regulatory accounting and cost allocation requirements that do not accurately generate real world returns
  - The same reports show that SBC's return for switched access is 1.37% across its region
  - Either the data provide a distorted (and therefore meaningless) picture of ILECs' rate of return or switched access rates are unreasonably low.

Special Access is Highly Competitive

- The special access has been subject to competition for the last 18 years, during which CLECs invested billions to deploy their own fiber.
- Competitive Special access providers have captured 28-39% of the market.
- CLECs can readily extend facilities to reach buildings housing customers that generate 97% of special access revenues
    - Special access customers are highly concentrated. 80% of SBC's special access revenues are derived from 25% of the wire centers in which it provides special access.

Any Conversion of Special Access to UNEs Conflicts with the Goals of the Act

- Undermines facilities-based competition where it is most advanced.
- Subjects special access to price regulation more onerous than when it was a monopoly service.
- Windfall for IXCs and large users at expense of basic consumers.

Competitive Triggers

- No unbundling of high-cap loops and transport at DS3 and above, including dark fiber.
- If the FCC elects not to remove all DS1s, a granular competitive carveout should be developed, such as:
  - No unbundling of DS1 loops and transport at wire centers:
    - with 2 or more fiber-based collocators,
    - with at least 15,000 business lines, or
    - that generate $150,000 or more in monthly Special Access revenue.

Regulatory Framework: Packet-Based Services

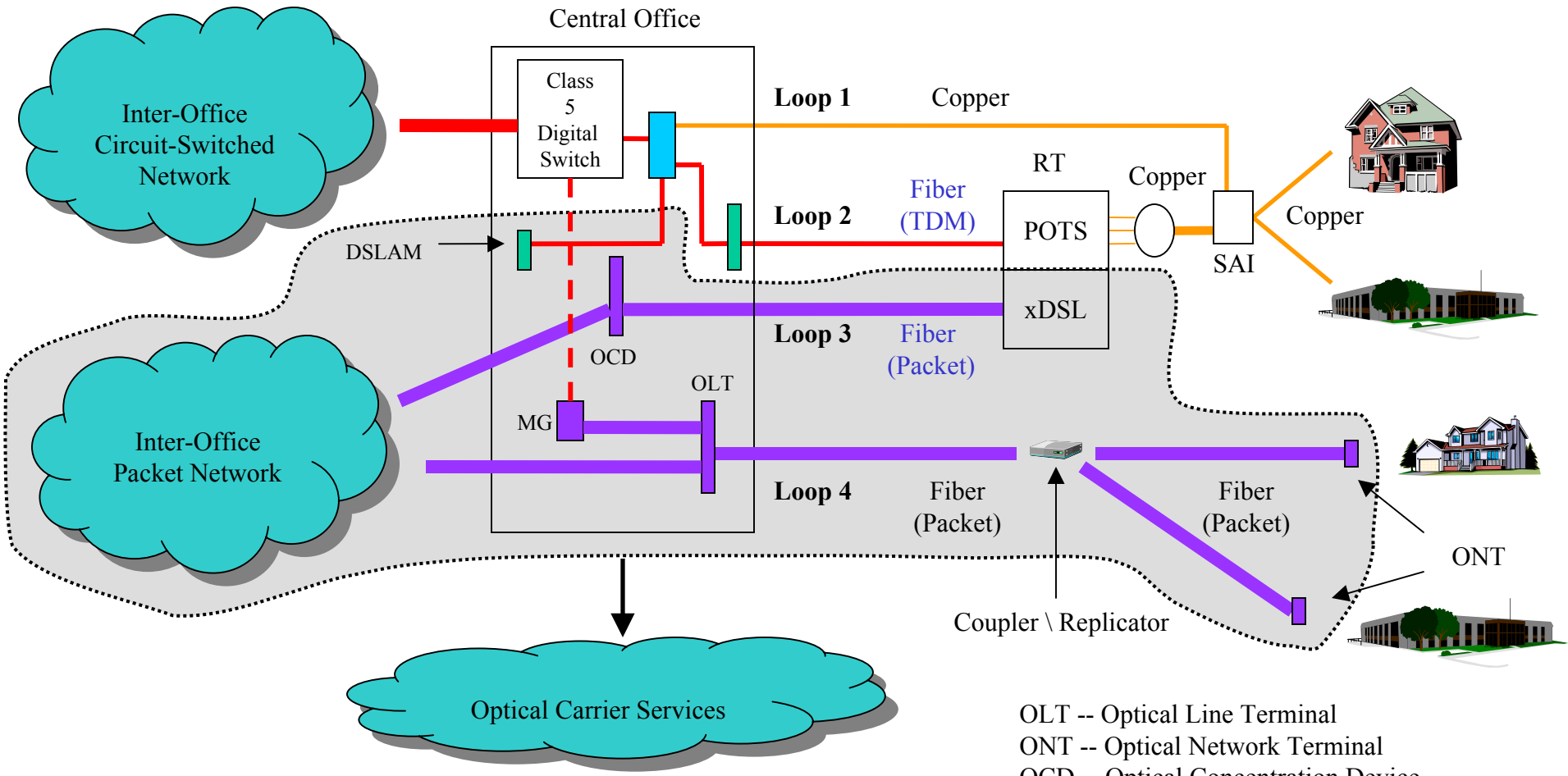

OLT -- Optical Line Terminal
ONT -- Optical Network Terminal
OCD -- Optical Concentration Device
MG -- Media Gateway

- *At a minimum*, packet-based networks and services should be regulated differently from legacy circuit-switched networks

Mass Market: Cable Will Continue to Dominate

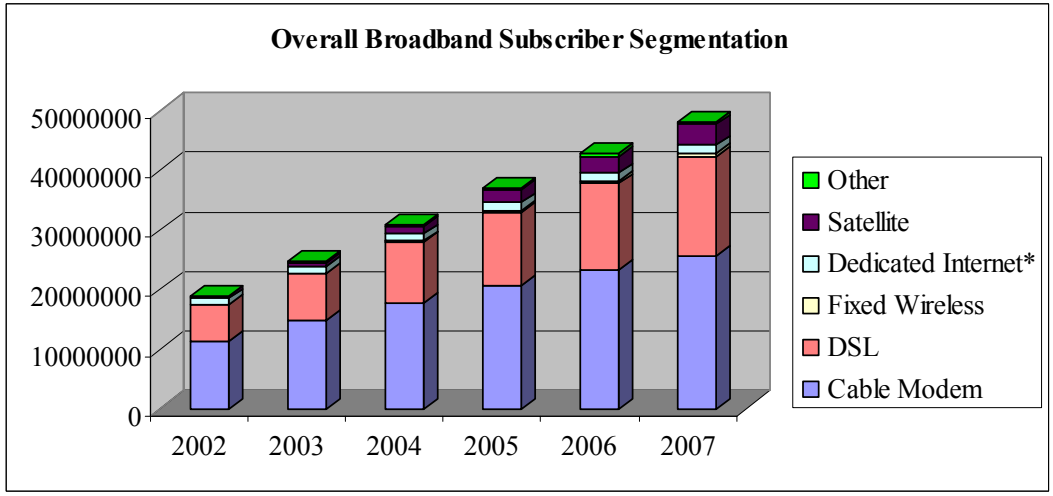

	2002	2003	2004	2005	2006	2007
Cable Modem	11,282,000	14,730,000	17,827,000	20,709,000	23,200,000	25,529,000
DSL	6,120,000	7,933,000	10,035,000	12,187,000	14,487,000	16,639,000
Fixed Wireless	69,230	110,475	212,129	345,020	480,181	623,390
Dedicated Internet*	990,000	1,090,000	1,160,000	1,210,000	1,260,000	1,310,000
Satellite	346,000	640,000	1,384,000	2,162,000	2,845,000	3,510,000
Other	181,000	220,000	270,000	338,000	415,000	480,000

* Includes HDSL and HDSL2

"With over 7 million consumer and 500,000 business subscribers at the end of 2001, cable modem will easily maintain its leadership as the most important broadband connectivity technology in the United States."

(*2002 Broadband Subscriber Forecast*, Yankee Group (August 2002))

Application of the Impairment Standard

- Develop a national pre-emptive framework
- Provide clear guidance that an FCC finding regarding a lack of impairment, is a limiting standard on any impairment analysis conducted by the states.
- States lack jurisdiction over all inter-modal competitors and thus can not harmonize regulation
- A patchwork of various state actions create uncertainty and impede investment
- Rapid financial deterioration of the industry cannot tolerate inevitable process delays of further state proceedings