Jonathan J. Boynton
Associate Director –
Federal Regulatory

SBC Communications, Inc.
1401 I Street, N.W., Suite 1100
Washington D.C. 20005
Phone: (202) 326-8884
Fax: (202) 408-4801

October 28, 2002

VIA ELECTRONIC SUBMISSION

Ms. Marlene H. Dortch
Secretary
Office of the Secretary
Federal Communications Commission
445 12th Street, SW
Washington, DC 20554

Re: **Ex Parte Communication**
CC Docket Nos. 01-337, 01-338, 02-33
CS Docket No. 02-52

Dear Ms. Dortch:

On October 25, 2002, Donald E. Cain, Jeffry A. Brueggeman, and James K. Smith on behalf of SBC Communications, Inc. met with Robert Pepper, Barbara Cherry, Simon Wilkie, and Scott Marcus of the Office of Planning and Policy. The purpose of the meeting was to provide an overview of the four broadband proceedings currently before the Commission. The attached presentation formed the basis for the discussion.

Pursuant to Section 1.1206(b) of the Commission's rules, this letter and the attached presentation are being electronically filed in each of the proceedings identified above.

Please call me if you have any questions regarding this matter.

Sincerely,

Jonathan J. Boynton

Attachment

Unified Broadband Overview
October 25, 2002

Regulatory Framework: Packet-Based Services

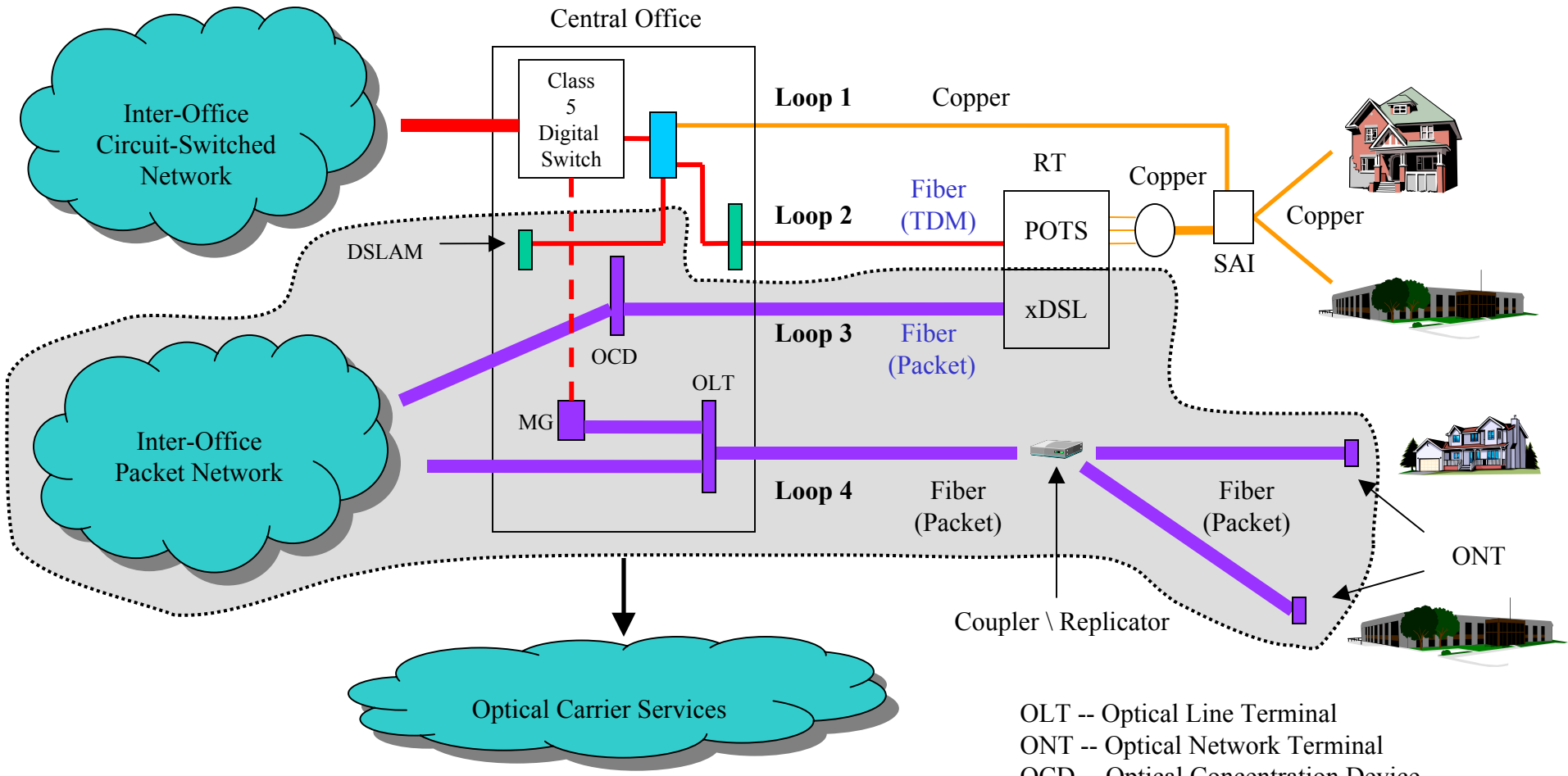

OLT -- Optical Line Terminal
ONT -- Optical Network Terminal
OCD -- Optical Concentration Device
MG -- Media Gateway

- *At a minimum*, packet-based networks and services should be regulated differently from legacy circuit-switched networks

Regulatory Framework: Key Issues

- Unbundling Requirements
  - Do not extend unbundling to packet/fiber facilities

- Dominant Carrier Regulation
  - Classify ILECs as non-dominant in the provision of broadband services and forbear from dominant carrier regulation (e.g., tariffs, CEI)

- *Computer Inquiry* Rules
  - Eliminate outdated rules that interfere with broadband technology integration and innovation (e.g., *Computer II* separation of transmission from information service)

- ISP Access
  - Eliminate mandatory ISP broadband access or adopt uniform cable/wireline ISP broadband access requirement

Mass Market: Cable is More Widely Available

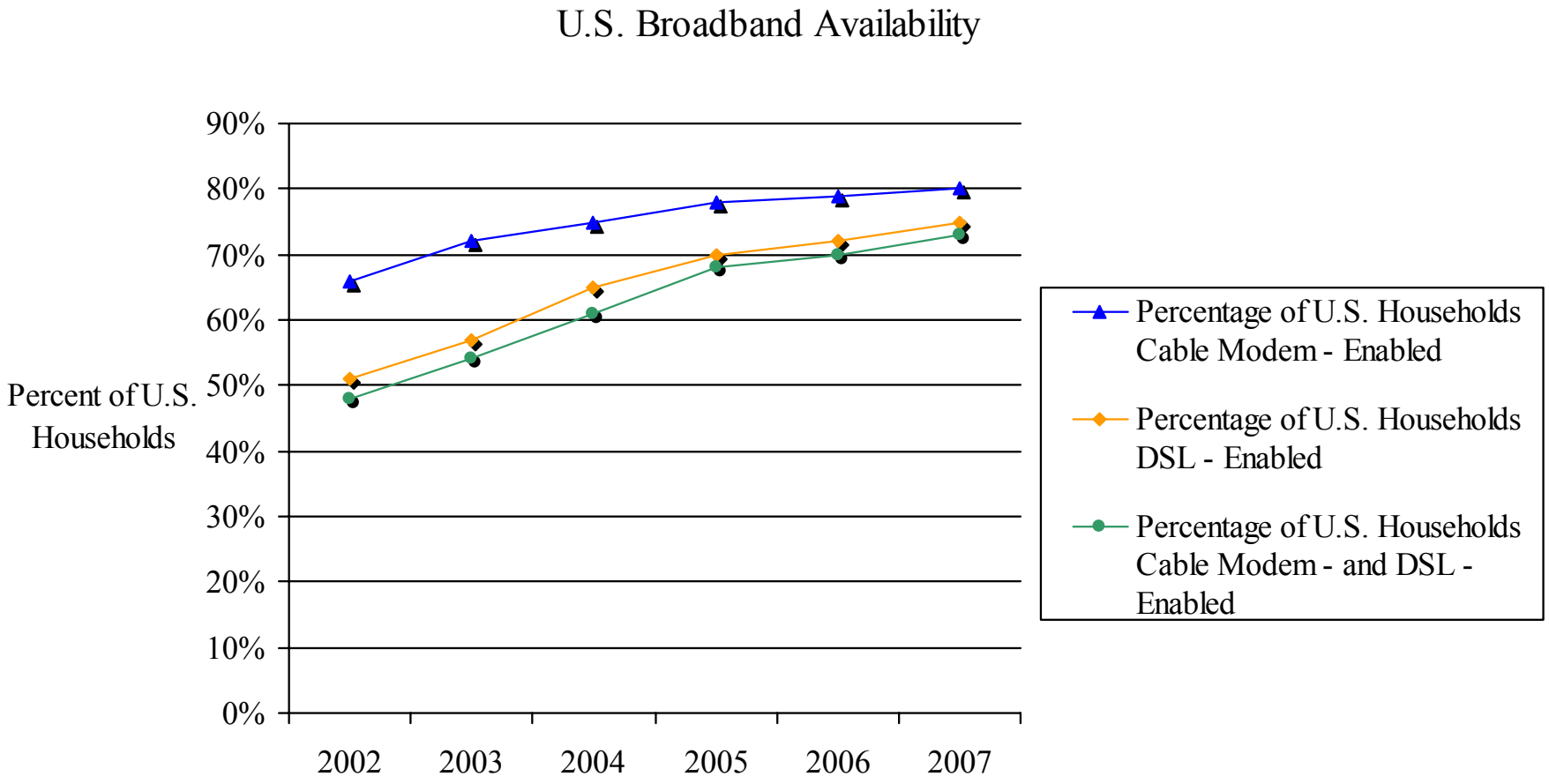

(*2002 Broadband Subscriber Forecast*, Yankee Group (August 2002))

Mass Market: Cable Will Continue to Dominate

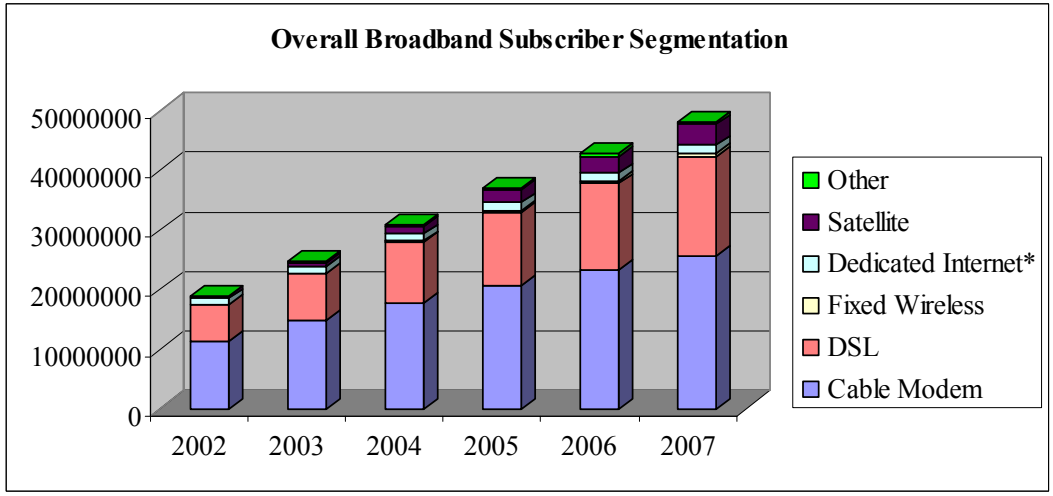

	2002	2003	2004	2005	2006	2007
Cable Modem	11,282,000	14,730,000	17,827,000	20,709,000	23,200,000	25,529,000
DSL	6,120,000	7,933,000	10,035,000	12,187,000	14,487,000	16,639,000
Fixed Wireless	69,230	110,475	212,129	345,020	480,181	623,390
Dedicated Internet*	990,000	1,090,000	1,160,000	1,210,000	1,260,000	1,310,000
Satellite	346,000	640,000	1,384,000	2,162,000	2,845,000	3,510,000
Other	181,000	220,000	270,000	338,000	415,000	480,000

* Includes HDSL and HDSL2

"With over 7 million consumer and 500,000 business subscribers at the end of 2001, cable modem will easily maintain its leadership as the most important broadband connectivity technology in the United States."

(*2002 Broadband Subscriber Forecast*, Yankee Group (August 2002))

Mass Market: Why Cable Will Continue to Dominate

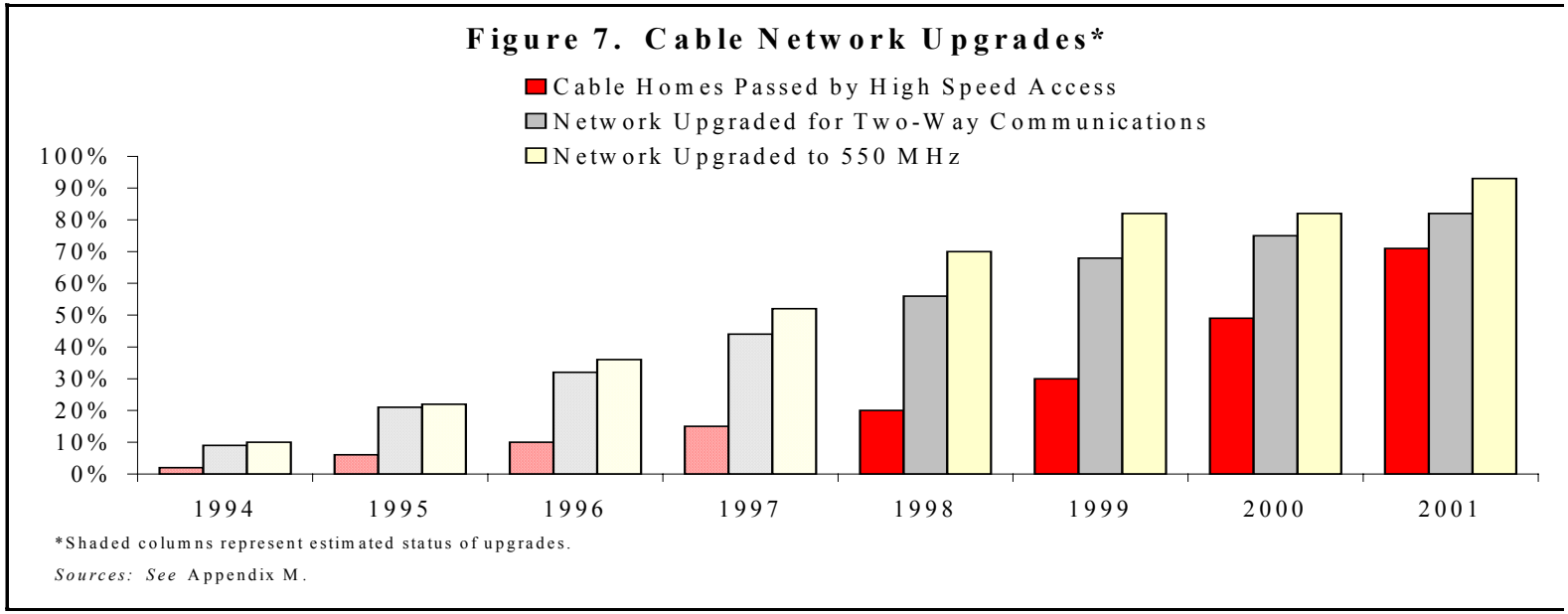

(UNE Fact Report 2002 - V 28)

- Cable *already* has robust broadband network that can deliver integrated package of voice, data, and video services
- In order to match this package, ILECs would have to deploy fiber-to-the-home (FTTH)
  - xDSL is merely a transition technology
  - FTTH requires time and huge investment

Larger Business: IXCs Dominate

ATM and Frame Relay Service Arrangements

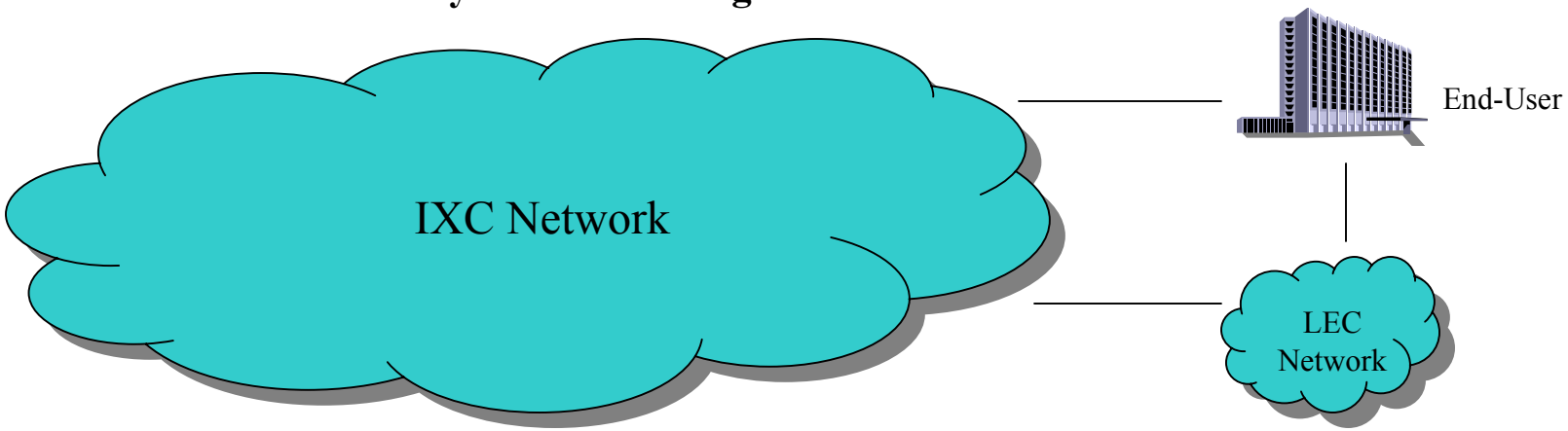

- Customers prefer single provider for "all distance" broadband needs
- Market predominantly served by IXC end-to-end services
  - Evidenced by IXCs' overwhelming share of ATM and Frame Relay revenues
    (Approximately 85% according to R. Kaplan, IDC Reports 2001-2006 Analysis Forecast (2002))
  - Big 3 IXCs generally avoid interfacing with SBC's ATM and Frame Relay networks and do not use SBC's ATM and Frame Relay services as wholesale inputs
- ILECs' ATM and Frame Relay services have limited interstate application

Larger Business: Facilities-Based Competition

- Extensive packet and fiber deployment by IXCs and CLECs:
  - ALTS *Annual Report on State of Local Competition 2002*
    - Data switch deployment grew from 874 in 1998 to 9,524 in 2001
    - 339,000 miles of fiber
  - Fiberloops.com
    - 2,000 local fiber networks from 100+ companies

- AT&T facilities (website):
  - 51,000 miles of fiber
  - 60+ interconnected SONET rings
  - 620+ POPs

- MCI/WorldCom facilities (website):
  - ATM and Frame Relay in 350+ MSAs
  - 700 POPs

Larger Business: IXCs Will Continue to Dominate

- "Bell companies don't present a major threat to WorldCom, Inc.'s business-service group … [they] don't have the products, systems, or sales forces to attack the middle and high-end segments of the business-service market."

  (Brian Brewer, Chief Marketing Officer for WorldCom - TR Daily May 7, 2002)

- IXCs are only broadband providers with ubiquitous nationwide networks
  - Easy for IXCs to displace ILEC interstate broadband services

- IXCs have large embedded customer base subject to long-term contracts

- SBC has gained only *de minimis* share of interLATA ATM and Frame Relay market in states where it has obtained § 271 approval

Unbundling: Impedes Broadband Investment and Competition

- Unbundling diminishes incentive to make risky investment
  - Increases costs: Deployment and operational
    - Unbundling fiber is more expensive than copper

      (See March 22, 2002 Ex Parte Filing)
    - Precludes deployment of most efficient network architecture
  - Decreases revenues: Limits upside return on investment
  - Deprives ILEC of control over its investment

    (See August 1, 2001 Ex Parte Filing)

- Unbundling undermines facilities-based competition
  - Unbundling would prevent ILEC broadband networks from being viable inter-modal competitor to cable
  - CLEC use of ILEC investment to price arbitrage existing business rates would come at the expense of mass market deployment

Unbundling: Scope of Relief

- No unbundling of broadband investment and facilities. *At a minimum*, this includes:
  - Packet equipment and integrated fiber with no exceptions
    - Reject UNE proposals (e.g., ELP, definitional changes to loop, advanced electronics, packet switching) that equate to broadband "UNE platform"
  - Dark fiber deployed in loop

- No line sharing

- Preempt state attempts to extend unbundling to broadband
  - Commission's § 251(d)(2) determinations must be binding on the states
  - State actions create uncertainty and impede broadband deployment
  - States lack jurisdiction over all inter-modal competitors and thus can not harmonize broadband regulation

Non-Dominant: Market Definition

- Commission has made determination that broadband is a discrete and nascent market

- The market for broadband services should be defined as:
  - All packet-based services
  - High-capacity (DS1 and above) services that are not circuit switched

- ILECs lack market power in both broadband product market segments: mass market and larger business

- SBC proposes a bright line approach to non-dominant relief that is targeted and well defined:
  - Packet-based services and very high-capacity optical services (155 Mbps and higher) that are not circuit switched

Non-Dominant: Scope of Relief

- Commission should classify ILECs as non-dominant in the provision of broadband services to larger business and mass market customers
  - Mass market services include DSL and successor services
  - Larger business services include ATM, Frame Relay, Ethernet and optical services that are not circuit switched

- As with AT&T non-dominant classification, Commission should forbear from all dominant carrier regulation, including:
  - Tariff and price regulation
  - *Computer III* ONA and CEI requirements

Non-Dominant: Regulation is Unnecessary for Competitive Market

- CLECs will continue to have access to ILEC inputs
  - Unbundled copper loops
  - Tariffed DS1 and DS3 special access
  - DS1 UNEs, subject to granular impairment analysis

- Tariffs not needed for ISP broadband access
  - Narrowband ISP access not affected
  - Commission correctly de-linked ISP broadband access from Title II regulation in *Cable Declaratory Ruling*
  - U.S. Internet Industry Association (USIIA) agrees that market agreements preferable to tariffs

Title I NPRM: Eliminate *Computer Inquiry* Requirements for Wireline Broadband

- Predicate for *Computer Inquiry* rules does not exist:
  - Wireline industry structure is fundamentally different today -- no "Bell System"
    - No "one-wire" world
    - No vertical integration with R&D, manufacturing, and nationwide wireline network ownership
  - Broadband market is nascent and developing based on inter-modal facilities-based competition
    - Competing facility providers must have the same opportunity to use technology and design and package broadband services
    - *Cable Declaratory Ruling* rejected *Computer Inquiry* framework
  - Wireline providers are, and will continue to be, secondary players in the broadband market
    - Legacy wireline regulation does not reflect new broadband reality

Title I NPRM: *Computer Inquiry* Requirements are Anti-Competitive in the Broadband Market

- Limit use of technology --"radical surgery" requires separation of telecommunication and information capabilities
  - Restricts full utilization of technology integration in design and evolution of broadband networks
  - Restricts full utilization of technology integration in developing broadband services
  - Restricts relationships with ISPs

- Impede competition -- deprive wireline providers of the same ability/opportunity to develop, design, package, and provision new broadband information services as is available to the market leaders

- Inhibit investment -- restricts efficient development of new broadband applications and services

Broadband ISP Access: Consistent Approach For Competing Platforms is Essential

- Title I provides framework for addressing broadband ISP access in a competitively neutral and uniform manner across competing platforms

- Public interest/policy considerations can not justify imposing or maintaining more onerous requirements on wireline providers
  - No technical basis for cable/wireline differentiation
  - The same regulatory cost/benefit analysis is required for both cable and wireline
  - Irrational to impose more onerous ISP requirements on secondary market participants

- Subjecting competing broadband facility providers to asymmetric ISP access requirements is fundamentally anti-competitive
  - Affects costs, network evolution, service introduction, investment

Broadband ISP Access: Minimal Regulation is Warranted

- Preference is to let market develop through commercial arrangements -- will best serve interests of ISPs, broadband providers, and consumers (SBC/U.S. Internet Industry Association Memorandum of Understanding)

- Title II *Computer II/III* requirements do not constitute minimal regulation. In the *Cable Modem Ruling* the Commission:
  - Declined to require "radical surgery" for cable broadband
  - De-linked tariff regulation and ISP access for the market leader
  - Recognized private carriage as an option

- Any requirements under Title I must provide maximize flexibility to structure business relationships with ISPs

Options for Wireline Broadband ISP Access

- Commission retains authority under Title I to establish uniform cable/wireline broadband ISP access requirements, if necessary

- ISP will continue to have wireline broadband options
  - Use of copper UNE loops in CLEC/ISP arrangements
    - About two-thirds of U. S. Homes are addressable for xDSL with loop 18,000 feet or shorter (UNE Fact Report 2002 at IV-20)
  - DS-1 and DS-3 tariffs available for broadband services
  - Commercial arrangements -- SBC Commitment to make commercial agreements for broadband Internet access available (SBC/USIIA MOU)

Benefits of Comprehensive Approach

- Establishes bright line for limiting legacy regulation to legacy circuit-switched network
- Removes regulatory impediments to broadband deployment (supply) and provision of new innovative broadband services (demand)
- Applies consistent regulation across competing broadband platforms
- Minimizes regulatory entanglements in technology, while maintaining jurisdiction if problems arise
- Provides a stable, long-term regulatory framework for broadband

Implementation of Broadband Framework

- Triennial Review: Do not extend unbundling to packet/fiber investment
  - Stimulate investment and facilities-based competition
- ILEC Broadband Non Dominance: Eliminate dominant carrier regulation of ILEC packet-based services and very high-capacity optical services
  - Remove regulatory costs and service constraints
- Wireline Title I: Eliminate *Computer Inquiry* rules that impede new innovative broadband services
  - Provide flexibility in design and packaging of services
  - Adopt uniform cable/wireline ISP broadband access requirement
- Cable Title I: Address ISP broadband access consistently for cable/wireline broadband