222 Richmond Street - Suite 301
Providence, Rhode Island 02903

January 10, 2003 ***EX PARTE***

Marlene H. Dortch
Secretary
Federal Communications Commission
445 12th Street, N.W.
Washington, D.C. 20554

Re: CC Docket Nos. 01-338; 96-98; 98-147

Dear Ms. Dortch:

This letter provides additional information concerning why it would be inconsistent with the Court's opinion in *United States Telecom Association v. FCC*[1] and bad public policy for the Commission to adopt an impairment standard for interoffice transport under which requesting carriers would be deemed unimpaired where they seek to lease unbundled dark fiber interoffice transport from the ILEC and attach their own OCn based electronics to it, but under which lit DS3 interoffice transport would be subject to a span-by-span and/or metropolitan area-by-metropolitan area impairment standard. Moreover, as explained in detail below, singling out for elimination unbundled interoffice transport used by requesting carriers to deploy OCn-based SONET rings cannot somehow be made more rational policy by limiting the rule to SONET rings of OC48 capacity and above, as some have suggested.

I. The Elimination Of Dark Fiber And Retention Of Lit Fiber Would Be Inconsistent With *USTA v. FCC*.

The impairment test described herein would be flatly inconsistent with the D.C. Circuit's decision in *USTA v. FCC*. In that case, the D.C. Court of Appeals held that the impairment standard adopted by the Commission in the *UNE Remand Order* impermissibly failed to consider the costs in terms of foregone investment and innovation caused by unbundling. According to the court, "[e]ach unbundling of an element imposes costs of its own, spreading disincentives to invest in innovation and creating complex issues of managing shared facilities." *Id.* at 427. The court therefore rejected the notion that "more unbundling is better" in instances where requesting carriers are able to obtain

[1] 290 F.3d 415 (D.C. Cir. 2002) (*"USTA v. FCC"*).

network facilities from non-ILEC sources. *Id.* at 425. Moreover, the court held that the Commission must limit ILEC unbundling obligations to those markets in which "multiple, competitive supply [of a UNE] is unsuitable." *Id.* at 427.

The transport standard at issue here would be inconsistent with this holding in two fundamental ways. *First*, it would force requesting carriers to replace their stand-alone ILEC dark fiber with ILEC dark fiber combined with ILEC electronics, thereby forcing competitors to buy *more* of the ILEC network than they desire. In other words, the standard fails to target unbundling to the specific *facility* that cannot be efficiently duplicated (the fiber linking central offices). Instead, it would force requesting carriers to purchase electronics that can be efficiently duplicated. In so doing, the Commission would again be guilty of embracing the "more unbundling is better" approach that the D.C. Circuit rejected, and it would perversely and unnecessarily end up "spreading disincentives to invest in innovation."

It is hard to imagine why the Commission would adopt an approach that stands the logic of the D.C. Circuit's decision on its head in this manner. Ever since adopting its expanded interconnection rules prior to the passage of the 1996 Act, the Commission has recognized that the purpose of unbundling obligations is to allow competitors to purchase only what they need from the ILEC while relying on their own facilities wherever they can.[2] The only purported rationale of which Conversent is aware for the standard discussed herein is that, by forcing requesting carriers to purchase lit transport, the Commission would make unbundled interoffice transport less attractive and make it more likely that competitors would build their own facilities. But this justification is deeply flawed. As discussed, it would *increase* unbundling instead of decrease it (as is required by the statute and by *USTA v. FCC*) as a means of targeting UNEs to markets where competitors are impaired. It would also reduce the level of competitor investment, because competitors like Conversent would almost certainly exit the market if they were unable to obtain dark fiber. The result would not be more investment in fiber deployment (because that investment, at least in the markets in which Conversent operates, would be inefficient), but rather reduced competitive investment in electronics. Nothing could be more contrary to the logic of the *USTA v. FCC* decision, the goals of the Act, and the goals of this Commission.

Second, the standard at issue would be inconsistent with the court's holding that the Commission must tailor its impairment standard so that unbundling applies in the particular markets where "multiple, competitive supply is unsuitable." The standard adopted in the *UNE Remand Order*

---

[2] *Expanded Interconnection with Local Telephone Company Facilities*, Memorandum Opinion & Order, 9 FCC Rcd 5154, ¶ 9 (1994) (subsequent history omitted) ("Our expanded interconnection policy is designed to facilitate competition for special access and switched transport services, essentially by making it possible to buy only those LEC transmission and distribution links that the customer wants, and to combine those links with the services of a competitor."); *Expanded Interconnection with Local Telephone Company Facilities*, Report & Order and Notice of Proposed Rulemaking, 7 FCC Rcd 7369, ¶ 120 (1992) ("Expanded interconnection will benefit customers by allowing them to buy only the LEC central office connections that they need and to purchase other services (such as transmission) from third parties or provide these services themselves."), *vacated in part on other grounds*, *Bell Atl. Tel. Cos. v. FCC*, 24 F.3d 1141 (D.C. Cir. 1994).

violated this requirement because it resulted in unbundling obligations without regard to whether multiple alternative sources of supply could be deployed in a particular market. The standard here would do the reverse; it would eliminate dark fiber unbundling obligations without regard to impairment in a particular market. Both approaches are equally "detached from any specific markets or market categories," and they are equally unlawful under the *USTA v. FCC* decision. *See* 290 F.3d at 426. Either way, the Commission is guilty of having "loftily abstracted away all specific markets" and of having failed to perform its statutory responsibility to require unbundling where competitors are impaired. *Id.* at 423.

There is no basis in the record in this proceeding for concluding that requesting carriers are unimpaired in the absence of dark fiber in *all* geographic markets across the country. Moreover, such a conclusion is counterintuitive, since there is every reason to believe that "multiple, competitive supply" of dark fiber would be inefficient in many of the second and third tier markets in which Conversent operates (non-ILEC suppliers offer dark fiber interoffice transport in only 20 of Conversent's 172 interoffice spans[3]). For example, Conversent's fiber ring network in Maine connects its collocation arrangements in North Deering, Westbrook, South Portland, Portland, and Falmouth. There simply are no third party vendors that have dark fiber interoffice transport that connect these wire centers. Nor would it be efficient for Conversent to attempt to replicate ILEC interoffice fiber facilities in these markets, because Conversent does not have any reasonable prospect of accumulating the economies of scale needed to justify such an investment in sunk costs.[4]

II. It Would Be Bad Public Policy To Eliminate Unbundling Requirements For ILEC Interoffice Transport Used By Requesting Carriers to Deploy OCn-Based SONET Rings.

It would be bad public policy for the Commission to adopt the standard at issue here. *First*, the standard would link impairment to the use of a particular technology or network architecture used for interoffice transport and would therefore yield incoherent results. It is a longstanding FCC policy to ensure that the rules governing local competition are technology-neutral.[5] The rationale for this policy

---

[3] A non-ILEC vendor is currently deploying dark fiber on five of Conversent's interoffice spans, so that soon there will be non-ILEC suppliers on 25 of 172 Conversent spans.

[4] As Conversent has explained, dark fiber is a classic example of a product that is subject to high entry barriers. For example, dark fiber is characterized by large economies of scale, large upfront sunk costs, third-party control of essential inputs, and substantial ILEC first-mover advantages. *See Ex Parte* Letter from Stephen W. Crawford, El Paso Networks & Scott Sawyer, Conversent Communications, to Marlene H. Dortch, FCC, CC Docket Nos. 01-338, 96-98, 98-147 at 15-18 (filed Nov. 26, 2002) ("*Dark Fiber Ex Parte*"). The economies of scale can be illustrated by the fact that Conversent generally needs only four dark fiber strands to carry its interoffice traffic while Verizon normally places over 90 stands in its interoffice transmission facilities. As a result, Verizon is able to recover these fixed costs over a much larger number of strands than would be the case with most competitors. *See id.* at 16.

[5] *See, e.g., Deployment of Wireline Services Offering Advanced Telecommunications Capability*, Order on Remand, 15 FCC Rcd 385, ¶ 2 (1999) ("Central to Congress' goal of widespread deployment of advanced services is section 251 of the 1996 Act. Congress made clear that the 1996 Act is technologically neutral and is designed to ensure competition in all telecommunications markets.") (citations omitted), *vacated in part on other grounds, WorldCom v. FCC*, 246 F.3d 690

is the recognition that the marketplace is better than regulators at selecting the most efficient technology for providing a service. As a result, any regulation that favors one technology for the provision of competitive service over another must be rejected.

The network architecture normally used by CLECs in a DS3 environment is fundamentally different from the network architecture normally used by CLECs in an OCn environment. CLECs generally use unbundled interoffice lit DS3 transport to backhaul traffic from their collocations in ILEC central offices (the collocations are necessary to connect to end users' loops) directly to the CLEC switch. In contrast, CLECs normally use unbundled dark fiber interoffice transport to form a SONET ring by connecting each interoffice span with the CLEC's OCn electronics collocated in ILEC central offices. Conversent fully supports the availability of unbundled interoffice DS3 lit transport so that CLECs can use the network architecture that relies on those facilities. But there is simply no basis for regulators to favor that network architecture over a SONET ring network architecture using OCn technology.

Even if the Commission wanted to apply a capacity-based impairment test to DS3 and OCn-based transport on a technology-neutral basis, it could not do so in a rational manner. When assessing whether it is efficient for a competitor to build its own interoffice transport, one must examine both the revenue opportunities in a particular market and the costs of deployment. An impairment standard that links the availability of unbundling to the capacity of interoffice facilities deployed by a competitor considers only the revenue opportunity (capacity being a proxy for revenue opportunity). In so doing, such a test implicitly assumes that the costs of generating traffic are the same (or at least very close) for all interoffice network architectures. In other words, it assumes that the cost per DS3 equivalent of traffic is the same in a DS3 environment and an OCn environment. But this is simply not the case.

The most important cost variables to consider in this context are the number of collocations and associated electronics (collectively referred to herein as "collocations") as well as the number of interoffice fiber spans that a carrier must use in a transport arrangement.[6] The more DS3 equivalents of capacity that a carrier can establish per collocation and per fiber span, the lower its costs. It turns

---

(D.C. Cir. 2001); *Deployment of Wireline Services Offering Advanced Telecommunications Capability*, Memorandum Opinion and Order and Notice of Proposed Rulemaking, 13 FCC Rcd 24011, ¶ 2 (1998) ("The role of the Commission is not to pick winners or losers, or select the 'best' technology to meet consumer demand, but rather to ensure that the marketplace is conducive to investment, innovation, and meeting the needs of consumers."), *remanded, US West Communications v. FCC*, 1999 WL 728555 (D.C. Cir. 1999) (voluntarily remanded); *see also id.* ¶ 11 ("Congress made clear that the 1996 Act is technologically neutral and is designed to ensure competition in all telecommunications markets.").

[6] Because the purpose of this example is to demonstrate that the choice of interoffice network architecture and technology *by itself* results in substantial cost differences per single DS3 equivalent of traffic, this discussion assumes that the carriers face the same costs associated with purchasing electronics and collocations as well as with laying fiber. In the real world, these cost differences may be quite significant, a fact that makes the application of any impairment test that relies on a proxy for revenue alone that much more incoherent.

out that a carrier often has many more DS3 equivalents of capacity per collocation and per fiber span in a dedicated DS3 transport arrangement than is the case in a SONET ring arrangement.

For example, one might try to argue that a requesting carrier is unimpaired on a point-to-point route if the competitor has the equivalent of 12 DS3s of traffic on that route, regardless of whether the requesting carrier uses a DS3 dedicated connection or a SONET ring architecture. But this generalization is unsound. In many cases, a carrier using dedicated DS3s will have many more DS3 equivalents of capacity per collocation and per fiber span than is the case with a carrier using a SONET ring. As mentioned, in the conventional lit DS3 architecture, traffic travels solely between the end users served by the central office "A" where the CLEC has collocated and the CLEC's switch. This is not how unbundled dark fiber is normally used. In a SONET architecture, central offices A, B, C, D, and so on are all connected in a ring that carries all traffic around the entire ring, regardless of whether it originates or terminates at central office A, B C, D, etc. This difference in the manner in which traffic is carried on the two types of network architecture results in significant cost differences per DS3 equivalent of traffic.

To see how this works, assume that a CLEC using unbundled lit DS3s has accumulated the equivalent of 12 DS3s worth of traffic over the dedicated connection between the collocated facilities in central office A and the CLEC's switch. The CLEC in this scenario (depicted as Diagram 1 in the attached slides) has probably paid for only two collocations (one from the ILEC and one from a non-ILEC source for the CLEC's switch) and the single fiber facility between central office A and the CLEC switch. Now consider an OC12 SONET ring that carries the same equivalent of 12 DS3s. Assume that the SONET ring (depicted as Diagram 2 in the attached slides) consists of 12 collocations (11 from the ILEC and one from a non-ILEC source for the CLEC's switch) as well as 12 interoffice transport links connecting the collocations. In this example, it is likely that the costs per DS3 equivalent of traffic for the CLEC using the dedicated DS3s would be much lower than is the case with the CLEC using the OC12 SONET ring. This is because the ratio of DS3 equivalents of capacity to collocations and fiber connections is much higher for the dedicated DS3 circuit than for the SONET ring. The CLEC using the dedicated DS3 connection will have paid for one collocation as well as one half of an interoffice fiber link *for every six* DS3 equivalents of capacity. In contrast, the CLEC using the OC12 SONET ring will have paid for one collocation arrangement as well as one interoffice fiber link *for every one* DS3 equivalent of capacity.

It has been suggested that perhaps it would make sense to establish a rule that would presume that requesting carriers are unimpaired if they use unbundled interoffice transport to deploy a SONET ring at OC48 capacity or above. The logic here is apparently that this level of capacity surely is high enough to support construction by a non-ILEC source. But no such conclusion is justified. A SONET ring generally consists of anywhere between two and 16 individual interoffice spans connected by CLEC-deployed electronics. The cost a CLEC incurs per DS3 equivalent of capacity will vary depending on the number of collocations and interoffice spans as well as the capacity of the SONET ring. For example, a CLEC that uses 16 interoffice spans in an OC48 ring (depicted as Diagram 3 in the attached slides) would have the equivalent of three DS3s of capacity for every collocation and every interoffice fiber connection. Similarly, a CLEC that uses four collocations and four interoffice

spans to deploy an OC12 SONET ring (depicted as Diagram 4 in the attached slides) would have the equivalent of three DS3s of capacity for every collocation and every interoffice span. As this example demonstrates, there is no correlation between the capacity of a SONET ring and the costs per DS3 equivalent of capacity. A higher capacity SONET ring cannot be assumed to signify the presence of economies of scale, because a higher capacity SONET ring does not necessarily translate into lower costs per DS3 equivalent of capacity. This fact renders incoherent any impairment test that is based on a particular level of OCn capacity.

Finally, the standard at issue here would be bad public policy for one other critical reason. Forcing requesting carriers to rely solely on ILEC lit transport not only increases the price of unbundled interoffice transport for requesting carriers that want dark fiber, but it also degrades the quality of service that such competitors can provide. A CLEC relying on wholesale lit transport facilities cannot monitor its network from its Network Operation Center. This prevents the CLEC from providing superior maintenance and repair. In addition, requiring requesting carriers to use the ILEC's electronics introduces additional points of failure in a requesting carrier's network, because it requires that the CLEC deploy additional multiplexers in each central office (multiplexers that would be unnecessary if the CLEC could purchase stand-alone dark fiber). Moreover, SONET rings allow competitors to offer redundant, self-healing service, something that is in practice impossible when relying on ILEC lit DS3 circuits. It is utterly illogical to hobble competitors in this manner, especially since there are many circumstances in which it will never be efficient for them to replicate the ILEC's fiber, leaving them forever stuck with a competitive disadvantage.

III. Conclusion

For all of the reasons discussed herein, it makes no sense to adopt a standard that would effectively assume a lack of impairment in the absence of dark fiber. It would be more consistent with the *USTA v. FCC* decision and better policy to treat dark fiber transport as a separate product market and require that it be unbundled where an appropriate number of non-ILEC suppliers has not deployed dark fiber on a particular point-to-point route.[7]

Pursuant to Section 1.1206(b)(1) of the Commission's rules, 47 C.F.R. § 1.1206(b)(1), a copy of this letter is being filed electronically for inclusion in the public record of each of the above-referenced proceedings.

Sincerely,

/s/

Scott Sawyer
Vice President, Regulatory
Conversent Communications, LLC

---

[7] *See Dark Fiber Ex Parte* at 18-22.

Interoffice Transport Network Architectures

Diagram 1
Conventional Lit DS3 Architecture

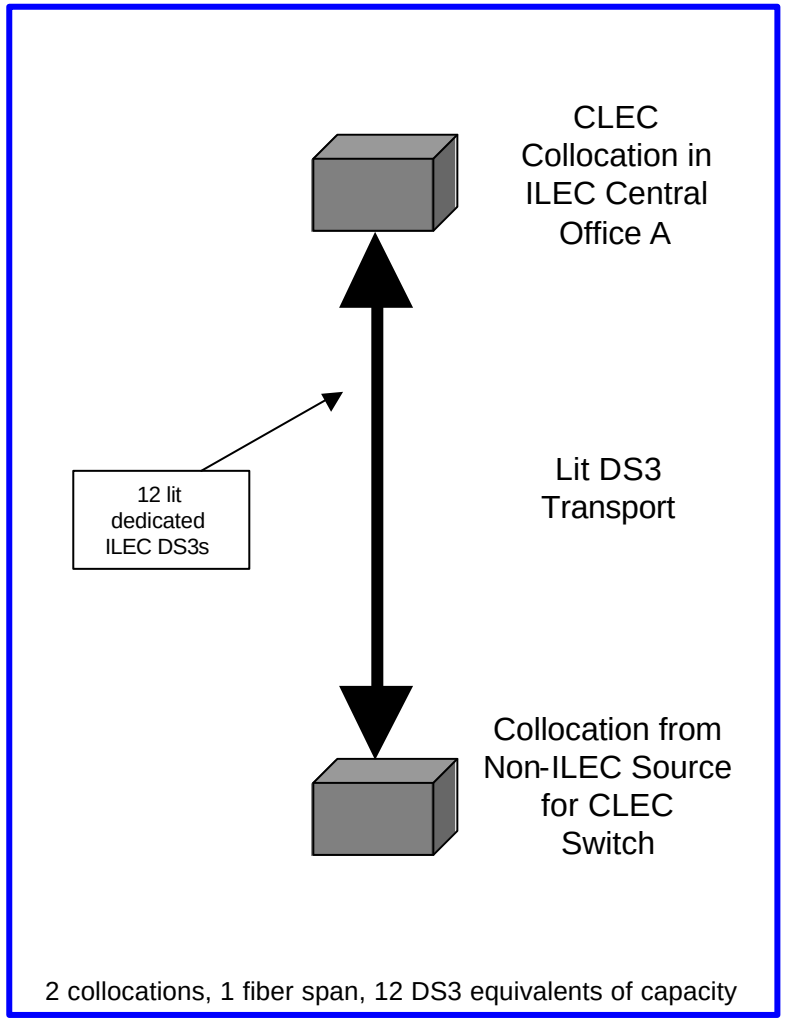

Diagram 2
OC12 SONET Ring Architecture

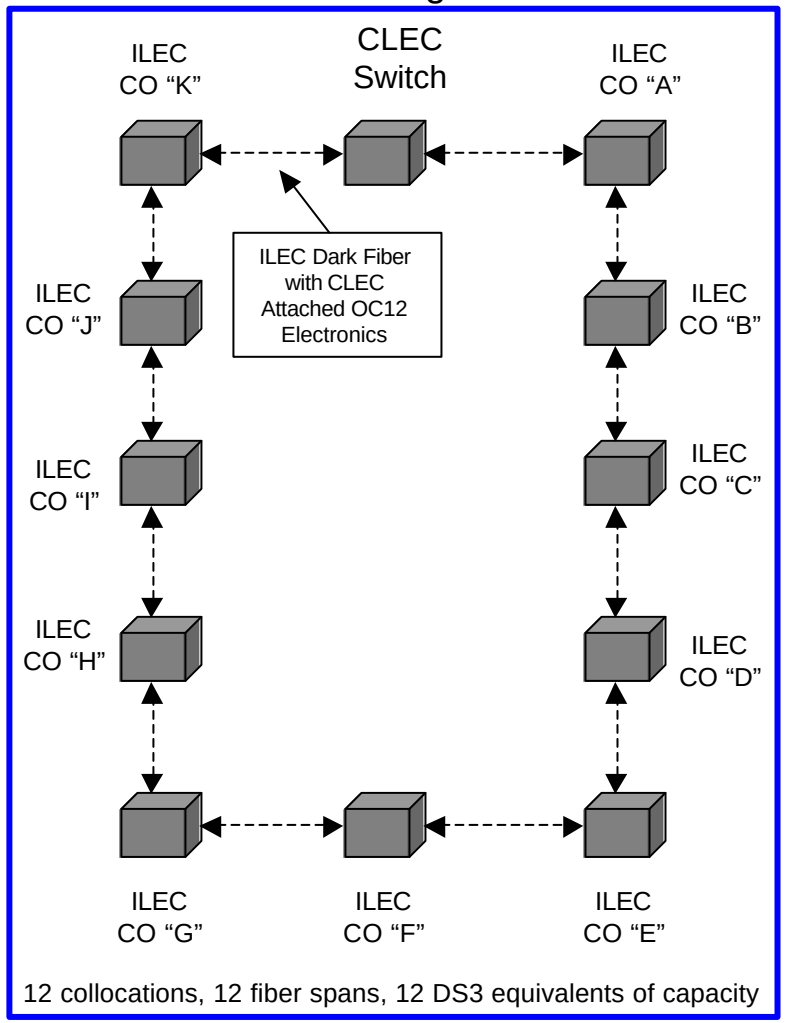

Diagram 3

OC48 SONET Ring Architecture

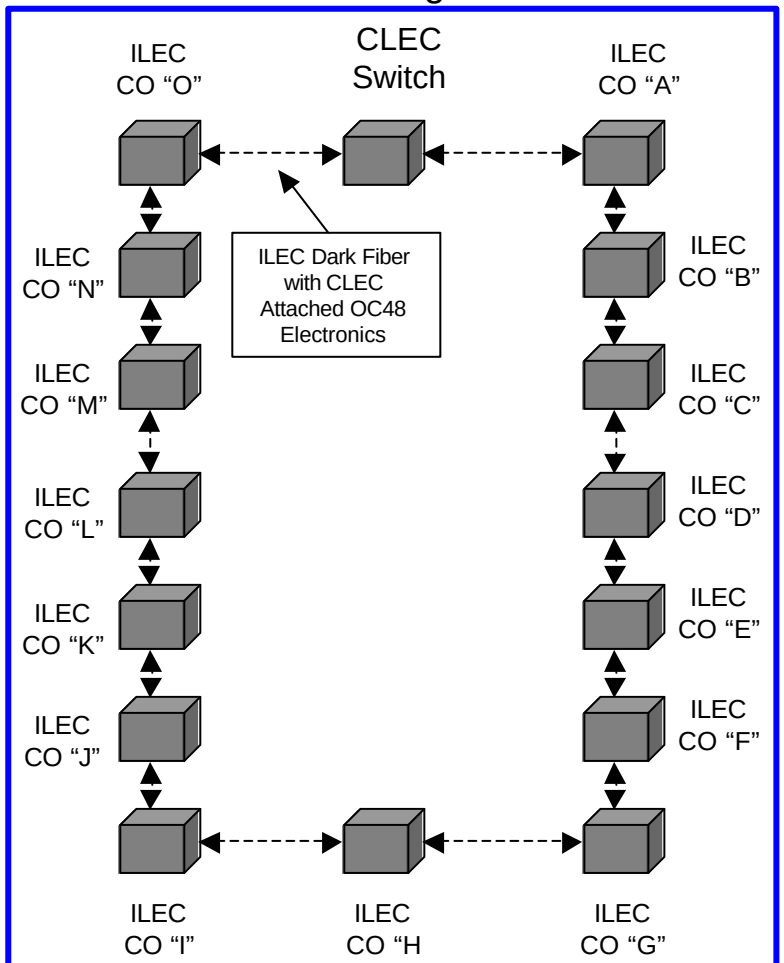

16 collocations, 16 fiber spans, 48 DS3 equivalents of capacity

Diagram 4

OC12 SONET Ring Architecture

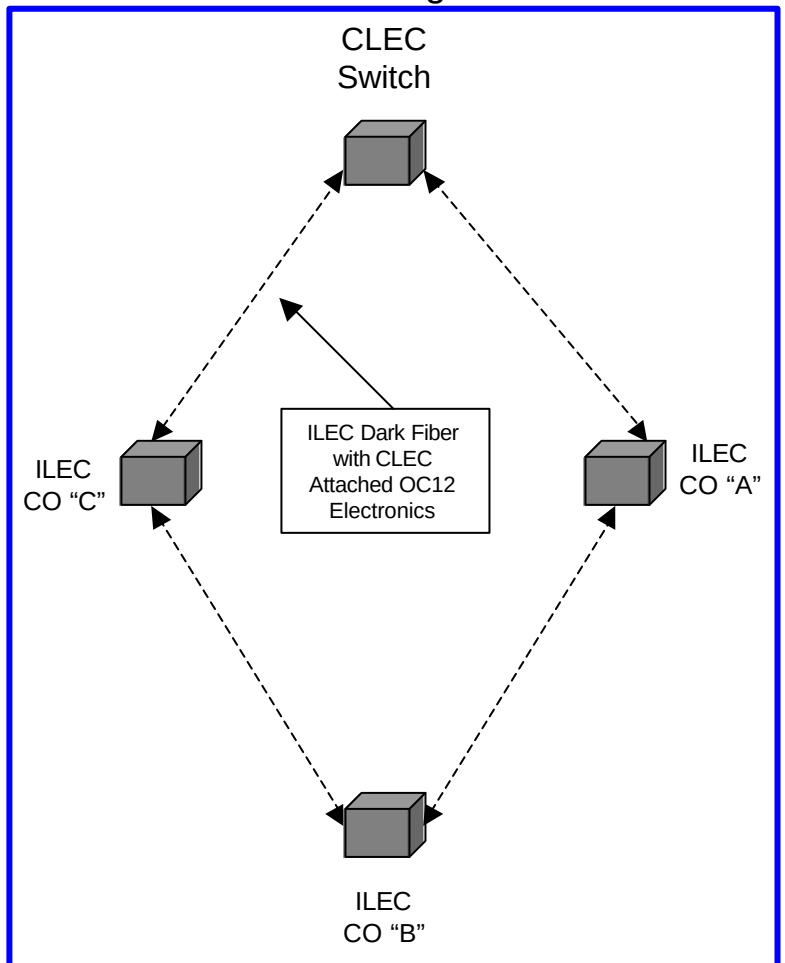

4 collocations, 4 fiber spans, 12 DS3 equivalents of capacity