KELLEY DRYE & WARREN LLP
A LIMITED LIABILITY PARTNERSHIP
1200 19TH STREET, N.W.
SUITE 500
WASHINGTON, D.C. 20036
(202) 955-9600

NEW YORK, NY
TYSONS CORNER, VA
LOS ANGELES, CA
CHICAGO, IL
STAMFORD, CT
PARSIPPANY, NJ

BRUSSELS, BELGIUM
HONG KONG

AFFILIATE OFFICES
BANGKOK, THAILAND
JAKARTA, INDONESIA
MUMBAI, INDIA
TOKYO, JAPAN

FACSIMILE
(202) 955-9792
www.kelleydrye.com

DIRECT LINE: (202) 887-1284
EMAIL: hhendrickson@kelleydrye.com

March 11, 2003

VIA ELECTRONIC SUBMISSION

Marlene H. Dortch, Secretary
Federal Communications Commission
The Portals
445 12th Street, S.W.
Washington, D.C. 20554

Re: Notice of *Ex Parte* Meeting by Core Communications, Inc.
WC Docket No. 02-384

Dear Ms. Dortch:

Pursuant to Section 1.1206 of the Commission's rules, I hereby submit, on behalf of Core Communications, Inc. ("Core"), in the above-captioned proceeding, this notice of an *ex parte* meeting held on March 10, 2003 between Chris Van de Verg, General Counsel of Core, Michael Hazzard of Kelley Drye & Warren, myself, and Lisa Zaina of Commissioner Adelstein's office. Also in attendance were Joseph Mulieri, Karen Zacharia and Jim Pachulski of Verizon. The attached presentation and supporting materials were distributed and discussed at the meeting.

In accordance with the Commission's rules, this letter and attachments are being filed electronically for inclusion in the public record in the above-referenced proceeding. Copies of this submission are being provided to the attendees. If you have any questions regarding this matter, please contact myself at (202) 887-1284 or Michael Hazzard at (202) 887-1240.

Respectfully Submitted,

Heather Hendrickson

Heather T. Hendrickson

Enclosures
cc: Lisa Zaina

CORETEL
CORE COMMUNICATIONS

Verizon Section 271 Proceeding
WC 02-384

BACKGROUND

March 10, 2003

Background

- Annapolis-based carrier founded in 1997
- Facilities-based
- Became profitable in 2000
- Reinvesting profits in company
- Focused on developing telecom infrastructure used by regional Internet Service Providers
- Primary service in Maryland, Pennsylvania, and Delaware (Maryland Eastern Shore)

Success-Based Business Plan

- Core is a real, traditional startup
- Pay as you grow – build out network incrementally
  - Baltimore (1999)
  - Mt. Airy, Easton, Damascus (1999-2000)
  - New York City, Philadelphia, Pittsburgh (2001)
  - Harrisburg (2002)
  - Altoona, Salisbury, Wilkes-Barre (2003)
- Core presently accounts for over 15% of Verizon's interconnection traffic in Maryland, and substantially all of Verizon's interconnection traffic on the Eastern Shore of Maryland

Success-Based Business Plan

- Focus on what you know -- Telco needs of regional ISPs
  - Modem services (1999)
  - Bandwidth services (2000)
  - 100 Megabit Ethernet services (2001)
  - Beta electronic fax service (2002)
- As technology matures, add services
  - Unified messaging (facilities under construction)
  - IP-based voice services (facilities under construction)

CORETEL
CORE COMMUNICATIONS

Verizon Section 271 Proceeding
WC 02-384

March 10, 2003

Agenda

- Checklist Item 1 – Interconnection
  - Entrance Facility
  - Network Modification
  - ANI

Checklist Items 2, 4, & 5– UNEs

  - Dark Fiber

- Public Interest

271 Compliance
Statutory Requirement

- As stated by the FCC:

  "In demonstrating its compliance, a BOC must show that it has a **concrete and specific legal obligation** to furnish the item upon request pursuant to state-approved interconnection agreements that set forth prices and other terms and conditions for each checklist items, and that it is currently furnishing, or is **ready to furnish**, the checklist item in quantities that competitors may reasonably demand and at an acceptable level of quality." *Qwest 271 Order, FCC 02-333 Appendix K-3 (Dec. 23, 2002)*
- Verizon has not met this statutory obligation
- Although a "legal obligation" may exist, Verizon is not "furnishing" interconnection or dark fiber UNEs "at an acceptable level of quality"

Checklist Item 1 -- Interconnection

- Entrance Facility Interconnection
- Network Modifications (EB-01-MD-007)
- ANI

Checklist Item 1 – Interconnection Entrance Facility

- Verizon's entrance facility interconnection practices and policies violate checklist item (i)
- Verizon has refused in every instance to interconnect with Core over existing facilities in violation of section 251(c)(2)'s:
  - technical feasibility standard
  - equal in quality standard
  - nondiscrimination standard

Checklist Item 1 – Interconnection Entrance Facility

- Verizon's refusal to utilize existing facilities for interconnection has delayed Core's interconnection in
  - Baltimore (1999)
  - Mount Airy (1999-2000)
  - Damascus (2000-2001)
  - Salisbury (2002-2003)
- In spite of Verizon's commitment to MDPSC to interconnect with Core in Salisbury, nothing has happened to date
- Verizon's "proposed contract amendment" is inadequate
  - Never approved by the MDPSC
  - Never provisioned by Verizon
- Verizon is not "furnishing" this item

Checklist Item 1 – Interconnection Entrance Facility

- Maryland PSC has recognized Verizon's "policy" of not providing technically feasible means of interconnection
- Maryland PSC Staff Counsel "believes that it is anti-competitive to deny a CLEC access to loop facilities because it gives Verizon the advantage of serving the customer immediately while the CLECs are waiting for facilities to be built." *Staff Counsel Initial Brief – Case No. 8881*
- As stated by MD PSC Staff Counsel, "failing to provide trunking over loop facilities when such trunking is available and when it is requested by CLEC does present a barrier to competition." *Staff Counsel Initial Brief – Case No. 8881*

Checklist Item 1 – Interconnection Entrance Facility

- In a 2/11/03 Ex Parte, Verizon reiterated its argument that the interconnection agreement between Core and Verizon requires Verizon to provide interconnection that is equal in quality to its own interoffice trunks and accordingly, if Verizon provides interconnection over shared loop facilities, it would have violated the interconnection agreement
- MD PSC Staff Counsel also states that Verizon has "…mischaracterized its obligations under the Telecommunications Act of 1996 (the 'Act') to provide interconnection on terms that are 'equal in quality' …."

  Staff Counsel Reply Brief - Case No. 8881

Checklist Item 1 – Interconnection Network Modification (EB-01-MD-007)

- Verizon similarly refuses to make technically feasible modifications to its network to accommodate interconnection
- Refusal to provide a simple cross connect caused Core's Damascus interconnection project to take over 270 days
- Subject of FCC Complaint (EB-01-MD-007) and Mandamus Petition (FCC Response due 3/28/03; Core Reply due 4/7/03)

Checklist Item 1 – Interconnection ANI

- Verizon refuses to pass ANI (automatic number identifier) to Core over interconnection trunks, even though it is technically feasible to do so
- ANI is critical call routing information, and the lack thereof materially handicaps Core's ability to deploy new services
- Verizon passes ANI over FGD Trunks – the service Verizon concedes is a "retail analog" of interconnection trunks

Checklist Items 2, 4, & 5
Dark Fiber

- Inquiry request designed to fail
- Of Core's 30 requests
  - 4 not processed (interLATA)
  - 18 two business days late
  - 5 at least five business days late
  - 6 rejected for no facilities
    - All "loop" requests denied
    - Including one Core interconnection point (48 incoming strands – 40 not utilized)
    - Preparing "field survey" request

Checklist Items 2, 4, & 5
Dark Fiber

- Verizon will not provision a dark fiber transport circuit across LATA boundaries, even though
  - No such restriction exists in interconnection agreement amendment
  - No such restriction exists in FCC rules
- Verizon is relying on its "Handbook"

Public Interest

- The local market in Maryland is not irreversibly open to competition
- ISP service is the ONLY success point of entry in Maryland
- CLECs terminate over 37x the traffic they originate in Maryland
- Verizon has paid short shrift to its commitments to the MDPSC

IOF vs. Loop

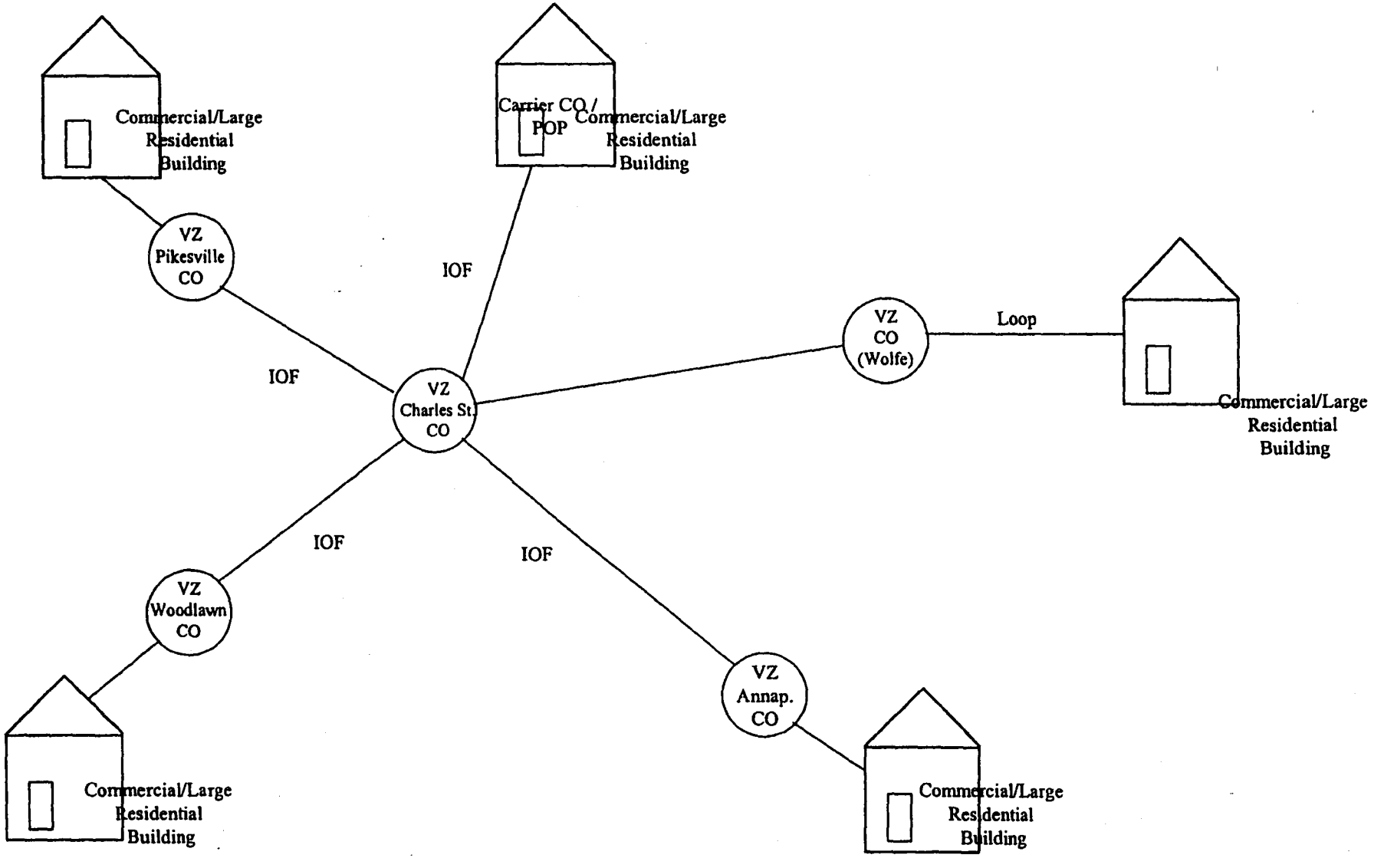
Commercial/Large Residential Building
Carrier CO / POP
Commercial/Large Residential Building
VZ Pikesville CO
IOF
IOF
VZ Charles St. CO
VZ CO (Wolfe)
Loop
Commercial/Large Residential Building
IOF
IOF
VZ Woodlawn CO
VZ Annap. CO
Commercial/Large Residential Building
Commercial/Large Residential Building

IOF

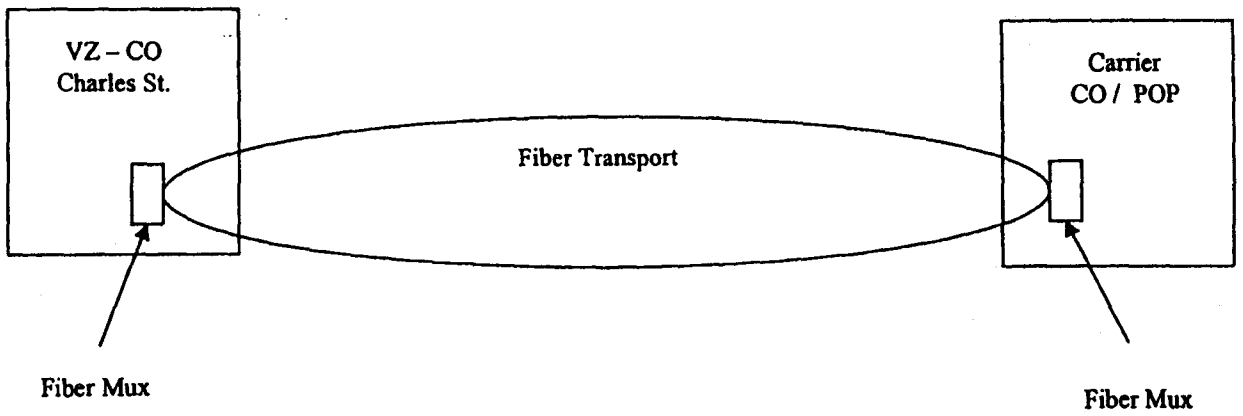
VZ – CO
Charles St.
Fiber Transport
Carrier
CO / POP
Fiber Mux
Fiber Mux

Loop

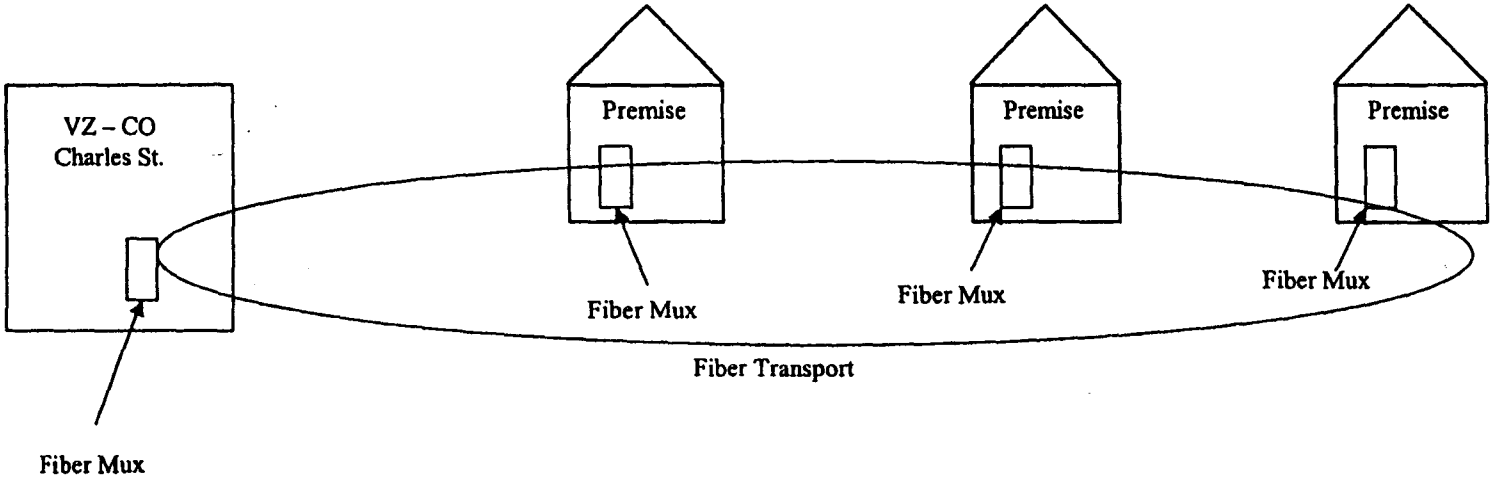
VZ – CO
Charles St.
Premise
Premise
Premise
Fiber Mux
Fiber Mux
Fiber Mux
Fiber Transport
Fiber Mux

Loop
(OC-12 Ring – As built by Verizon in May 1999)

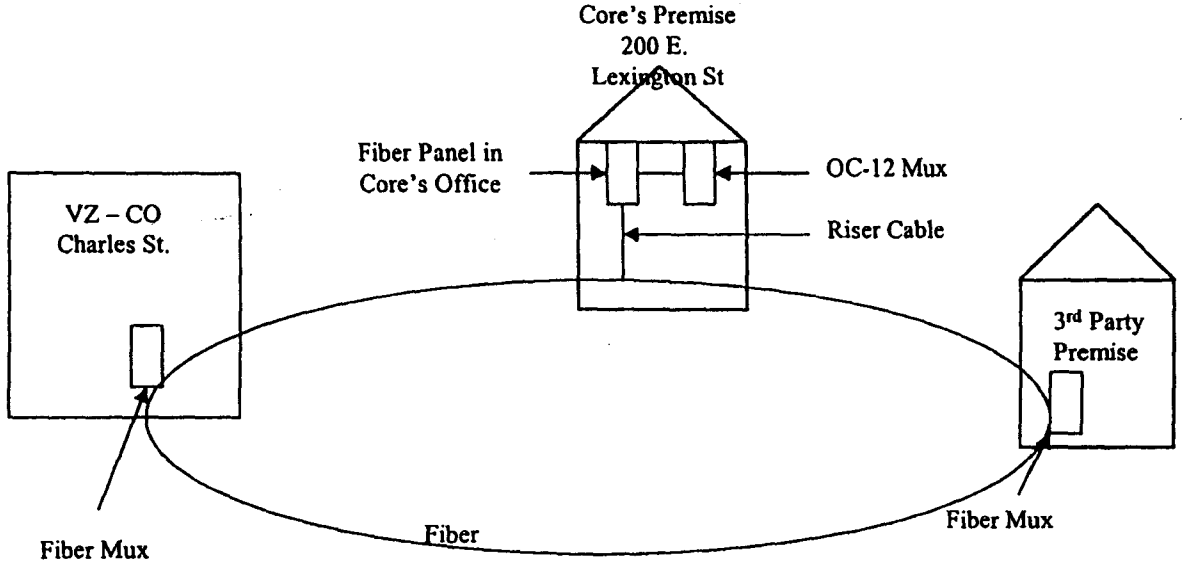

OC-12 Loop Ring

Loop
(OC-12 Ring – Post-Disconnect)

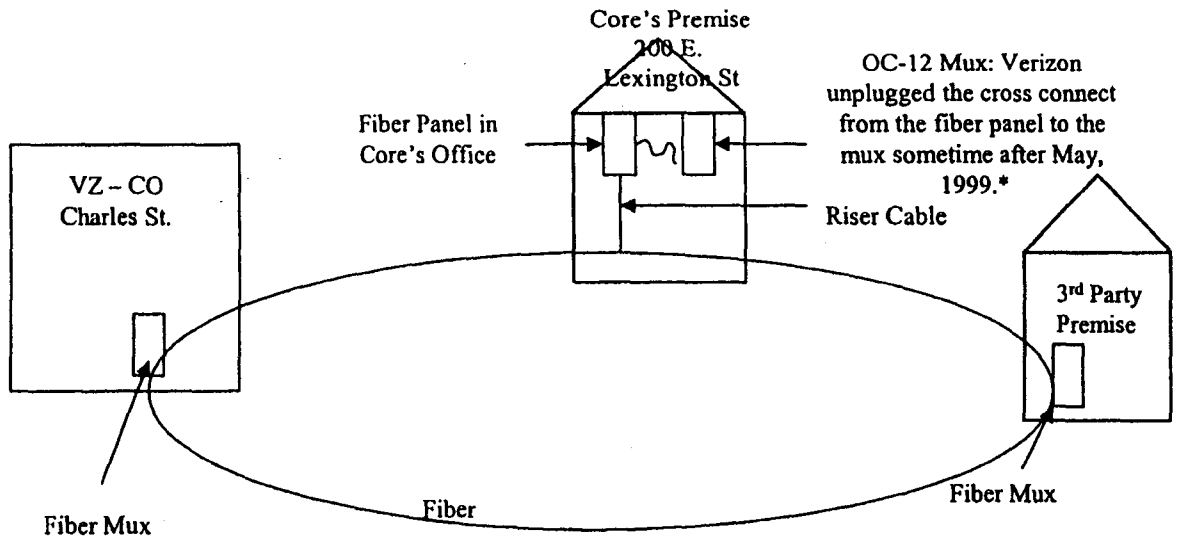

OC-12 Loop Ring

* According to Verizon witness Albert, the mux was unplugged prior to the August 11, 1999 interconnection implementation meeting. According to Core witness Mingo, the mux was unplugged after the August 11 meeting.

IOF
(Final Configuration with Core – Nov. 1999)

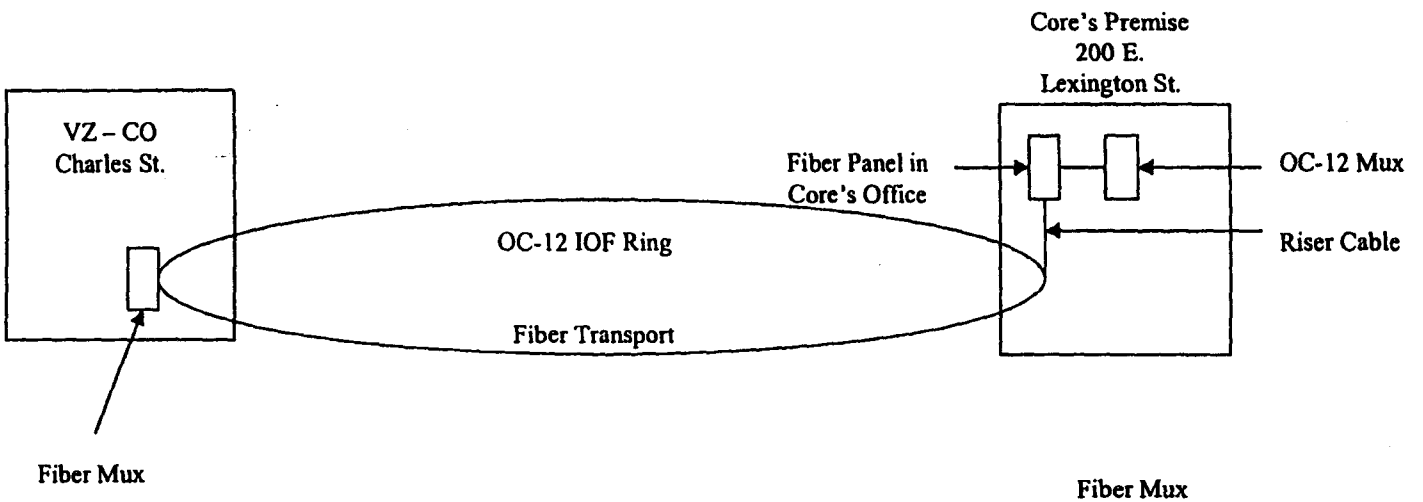

December 16, 2002

Mr. William R. Roberts
President
Verizon Maryland Inc.
Floor 8-E
1 East Pratt Street
Baltimore, Maryland 21202

Re: In the Matter of the Review By the Commission Into Verizon Maryland Inc.'s Compliance with the Conditions of 47 U.S.C. §271(c), Case No. 8921

Dear Mr. Roberts:

On April 12, 2002, Verizon Maryland Inc. ("Verizon") filed its request in Maryland for the Maryland Public Service Commission ("Commission") to consider the facts regarding Verizon's decision to enter the long distance market via a §271 application at the Federal Communications Commission ("FCC"). This request followed two years of testing of Verizon's wholesale operations support systems ("OSS") in Virginia and related corrective actions to those systems. The April 12th filing also reflected the fact that Verizon had requested the Maryland Public Service Commission to refrain from implementing Maryland specific OSS testing and await the outcome of the Virginia test results.[1]

The Maryland Commission's agreement with the above request ensured that any §271 consideration here would of necessity follow Virginia's consideration as our anchor state, Verizon Virginia's application to the FCC and FCC approval. Thus, this process ensured, as well, that Maryland would be one of the last Verizon states to consider a §271 application. The FCC has permitted applicants for §271 authority to rely upon OSS evidence from another state, referred to as the anchor state, provided the FCC has already approved the anchor state's §271 Application, or is given the opportunity to review the anchor state's OSS simultaneously, such as in a multi-state filing.

During the past several months, the Maryland Commission has conducted a detailed examination to determine the status of Verizon's compliance with §271(c) of the

[1] Maryland agreed to do so based upon Verizon's assertion that the Maryland and Virginia wholesale OSS are comparable, and in so doing would avoid duplicative testing and unnecessary cost to Verizon. Other parties disagreed with this position.

Telecommunications Act of 1996 ("1996 Act"). 47 U.S.C. §271(c). In the course of this examination, the Commission received into evidence thousands of pages of documents regarding checklist compliance, testing, validation, the Virginia consultative report, transcripts from the Virginia proceeding and other issues, as well as testimony and briefs from the parties, including several competitive local exchange carriers ("CLECs") and the Office of People's Counsel. The Commission conducted five days of evidentiary hearings from October 28 through November 1, 2002. In addition, on November 4, 2002 the Commission heard live surrebuttal regarding the FCC's October 30, 2002 approval of the Verizon Virginia §271 application. Since Virginia was the anchor state for OSS testing for Maryland, the Maryland Commission was unable to act prior to such approval being received. Now with the FCC approval of Virginia's OSS having been granted, the hearings in this proceeding concluded, over 200 pages of post-hearing briefs received and a transcript in excess of 1700 pages reviewed, this Commission can now complete its expeditious review of this matter.

This Commission has a long history of fostering competition in the local market. At one time, Maryland was considered a national leader in the opening of telecommunications' markets to competition. Today, this Commission is greatly concerned about the State of Maryland's inability to build upon the initial gains achieved in opening the local market to competition and the apparent sluggish nature of local competition growth.

Maryland began opening the local telephone service market to competition in 1994. In *Re MFS Intelenet of Maryland, Inc.,* 85 Md. PSC 38 (April 25, 1994), this Commission granted MFS authority to provide telephone services in Maryland, approved the unbundling of links and ports and required Verizon (then Bell Atlantic-Maryland, Inc.) to provide for interconnection with MFS. In Phase II of that proceeding, the Commission set the rates, terms and conditions for interconnection between the carriers. *Re MFS Intelenet of Maryland, Inc. Phase II,* 86 Md. PSC 467 (Dec. 28, 1995).

The passage of the 1996 Act interrupted Maryland's course of action as it imposed new duties and new processes on state agencies with regulatory responsibilities over telecommunications carriers. Enactment of the 1996 Act required the Commission to reexamine previously resolved issues to ensure compliance with new FCC directives. Further, the new process removed this Commission's autonomy and forced the Commission to constantly revise its vision of how competition can and should be achieved in Maryland to reflect federal regulatory and judicial decisions.

The State of Maryland is no longer a national leader in telecommunications competition. To the contrary, according to the FCC Report on the status of local competition in the nation referenced in the record of this proceeding, CLECs in Maryland serve 4% of the end-user switched access lines, while the national figure is 10%.[2] Indeed, as of December 2001, the level of competition in Maryland had receded by a third from 6% to 4% and appeared to be regressing, joining South Carolina and Mississippi. Such a condition is not

[2] On December 9, 2002, following the conclusion of the hearings in this proceeding, the FCC issued an updated report on the status of local competition which updated the number of end-user switched access lines served by CLECs in Maryland to 6% and 11% nationally as of June 2002.

acceptable in Maryland after 8 years of effort. This situation no doubt results from federal actions but also from various Verizon operational issues, CLEC issues – financial and otherwise, and this Commission's delay in resolving our recent proceeding into the rates Verizon charges for wholesale unbundled network elements in Maryland.

Thus, Commission's consideration of the record developed in this proceeding shows the obvious need to improve the local competitive environment in Maryland. In order to ensure that local competition is sustainable into the future, the Commission directs Verizon to implement the requirements discussed below. The Commission finds that subject to Verizon complying with the conditions identified below, Verizon is technically in compliance with the §271 checklist as defined by the FCC. Furthermore, the Commission notes a number of concerns that must be addressed before the Commission can say that Verizon's entry into the Maryland long distance market is in the public interest. The Commission hereby conditions its recommendation to the FCC that Verizon's entry into the long distance market is in the public interest on Verizon addressing the concerns listed below in the manner ordered by the Commission.

1. Verizon's No Build Policy

This issue involves Verizon's provisioning of high capacity unbundled local loops. Several parties to this proceeding argued that Verizon improperly rejects CLEC orders for high capacity loops[3] when Verizon claims no facilities are available and construction is required, (hereinafter referred to as Verizon's "no build" policy). Based on the evidence in this case, the Commission believes that the impact of Verizon's "no build" policy pertaining to the availability of DS-1 and DS-3 facilities for use by CLECs creates a barrier to local competition in Maryland.

Verizon contends that its policy is based on a decision of the United States Court of Appeals for the Eighth Circuit holding that unbundling only applies to the incumbent local exchange carrier's ("ILEC") existing network. Verizon also notes that the FCC is considering whether to modify these rules. Finally, Verizon claims that CLECs can cause Verizon to build new facilities if CLECs order them as special access facilities and pay the minimum term of two months' worth of charges for special access DS-1s and one year's worth of charges for DS-3s before converting them to UNEs. The CLECs contend that Verizon's policy results in new facilities costing CLECs more than if these facilities were provisioned at UNE rates.

The Commission does not dispute the effect of the Eighth Circuit decision, and the Commission is cognizant of the fact that the FCC has previously found that similar Verizon policies in other states do not violate the competitive checklist. In this proceeding, however, the evidence supports the claim that Verizon's policy has the effect of increasing CLEC costs and provisioning intervals which delay the CLECs provision of service to the end user, and as such creates a barrier to competition. The record suggests that a number of CLECs are

[3] E.g., DS-1 and DS-3 loops or other high capacity facilities, including interoffice facilities or entrance facilities.

unaware that the special access facilities which are ordered because of the lack of available facilities may be converted to UNEs after two months for DS-1s and one year for DS-3s. This conversion policy enables the CLECs to have access to the high capacity facility without the excessive cost of maintaining the facility at the higher special access rates indefinitely.

Therefore, as a temporary measure, the Commission finds that if a CLEC orders a DS-1 as a UNE with a request for automatic conversion, and Verizon does not provision it because of lack of facilities, Verizon shall convert the UNE order to a special access order and then convert the newly-built special access facility to a UNE automatically after the tariffed time has elapsed. This automatic conversion will only occur in those situations where the CLEC originally requested UNE facilities, and this request was denied by Verizon. Moreover, the FCC rules and limitations on converting special access to UNEs shall be followed for each conversion. Verizon shall put this revised ordering arrangement in place within four months.

The Commission's concerns pertaining to the effect of Verizon's "no build" policy on competition have been echoed in other Verizon jurisdictions, including Virginia. There, the Virginia State Corporation Commission ("VSCC") has instituted a proceeding to consider this issue, and the practice is also under consideration in the FCC's Triennial Review. This Commission will actively monitor both proceedings and upon their conclusion take further action as may be necessary.

Finally, the Commission is concerned about the limited amount of information Verizon provides a CLEC when no facilities are available. Verizon is directed to identify to the CLEC the reason for each no facilities finding.

2. Dark Fiber

Dark fiber, analogous to unused copper loop or transport facilities, is fiber that is in place but has not been activated through the connection of the electronics/photonics to carry communications services. Dark fiber is useful to local exchange carriers in a variety of ways including the provision of advanced services or services offered over high bandwidth. Dark fiber can also be cost effective and can result in economies of scale being achieved by CLECs. In accordance with the FCC's rules and regulations, ILECs must make dark fiber available to CLECs pursuant to section 251(c)(3) of the Act. The Commission believes that the record in this case suggests the lack of accessible information from Verizon to CLECs prevents CLECs from identifying and locating existing dark fiber within Verizon's Maryland network. Further, it appears that the CLEC's inability to reserve or order dark fiber while a request for collocation arrangement is pending creates an additional barrier to the development of local competition in Maryland.

According to Verizon, the FCC addressed the second issue noted above in its recent Virginia Consolidated Arbitration Order. As a result, Verizon is now required in Virginia to permit CLECs to order the desired dark fiber ten business days after the CLEC requests a collocation arrangement. The Commission hereby directs Verizon to implement this policy in

Maryland. Thus, CLECs will be permitted to order dark fiber and collocation arrangements in this manner. The Commission believes that this new requirement will advance the development of competition for advanced services in Maryland, such as high speed data access.

With regard to the issue of whether Verizon provides adequate information to CLECs so that they might locate dark fiber, Verizon contends that the Company has improved this process by providing alternative routing to a requesting CLEC. While this change is a step in the right direction, it represents only a minimal improvement at best. The Commission hereby directs Verizon to continue to provide this alternative routing. Furthermore, the Commission directs Verizon to provide to a CLEC upon request, central office and all related termination points for all fiber facilities for any office or group of offices at which the CLEC is considering ordering dark fiber. This will enable CLECs to have access to more accurate information pertaining to the availability of dark fiber on routes where fiber is actually installed and will operate to remove a barrier to competition by improving access to UNEs and the quality of information available to CLECs.

3. Geographically Relevant Interconnection Points ("GRIPS")

Verizon has entered as evidence in this proceeding a Model Interconnection Agreement containing terms which require CLECs to establish with Verizon one or more GRIPs or virtual geographically relevant interconnection points ("VGRIPs") at designated or agreed upon points within each Local Access and Transport Area ("LATA") of Verizon's network. This Commission previously considered this proposal in Case No. 8887, the Sprint Communications Co., L.P./Verizon Arbitration, wherein the Commission rejected Verizon's GRIP/VGRIP proposals. The proposed language in the Model Interconnection Agreement is substantially the same as the language proposed by Verizon during the Sprint Arbitration as well as the language rejected by the FCC in the Virginia Consolidated Arbitration. This Commission's position on this issue remains unchanged. The Commission does not accept Verizon's GRIPs or VGRIPs proposals.

According to Verizon, its Model Interconnection Agreement has been modified to reflect the results of the FCC's Virginia Consolidated Arbitration Order. However, the Model Interconnection Agreement, which was dated prior to the issuance of the Virginia Consolidated Arbitration Order, was submitted as evidence in this proceeding. It does not reflect that change. The Commission hereby directs that Verizon shall not include GRIPs or VGRIPs provisions in any Model Interconnection Agreement in use in Maryland unless expressly authorized by this Commission or the FCC.

4. Billing

The Virginia State Corporation Commission's testing of Verizon Virginia's OSS did not separately test the accuracy of the Billing Output Specification/Bill Data Tape ("BOS/BDT") electronic billing system used by Verizon to generate bills for some CLECs. The evidence in this proceeding demonstrates the importance of having a means of ensuring

that Verizon provides CLECs with timely and accurate paper and electronic bills. The Commission notes that the negative effects of incorrect billings falls more heavily on CLECs in a developing competitive market. The updated version of the Maryland Carrier-to-Carrier Guidelines, which enforces Verizon's performance, will become effective January 2003. They include metrics to measure important aspects of the billing process. These metrics require 95% of all billing claims to be acknowledged within two business days and also require that 95% of these billing claims be resolved within 28 days after acknowledgement.

This Commission has concerns that, under the stress of high commercial volumes electronic billing may experience unanticipated difficulties. Therefore, in order for this Commission to monitor whether Verizon's electronic billing is working successfully under commercial applications and volumes, the Commission directs Verizon to alter the report dimensions to include CLEC aggregate, CLEC specific, Verizon affiliate aggregate and Verizon affiliate specific information on the billing metrics. Furthermore, the Commission directs the Maryland Carrier-to-Carrier Collaborative ("Collaborative") to examine whether different metrics adopted in New Jersey or other jurisdictions are appropriate for use in Maryland.

5. Entrance Facilities

Verizon Maryland is required by the 1996 Act and the FCC to provide interconnection using all technically feasible means, including loop facilities. Verizon indicates that it will provide the types of interconnection such as that requested by Core Communications subject to appropriate amendments to the parties' interconnection agreement. According to Verizon, Core and some other CLECs are requesting a lesser form of interconnection which is not usually included in the interconnection agreements. The CLECs contend that this form of interconnection is necessary due to cost and provisioning time considerations. However, the Commission is pleased to note Verizon's willingness in Salisbury, Maryland to modify their previous policy by agreeing to interconnect with Core using its existing retail facilities in shared arrangement. This appears to remove a barrier to competition.

The FCC, in its interpretation of §251(c)(2), requires ILECs to provide interconnection that is "at least" equal in quality to that enjoyed by the ILEC itself. The FCC also requires ILECs to provide interconnection arrangements when the request is technically feasible, subject to the terms of the parties' interconnection agreements. The Commission finds that it is technically feasible in some instances for Verizon to provide entrance facility interconnection to requesting carriers over loop facilities that are shared with Verizon's retail customers, rather than over conventional interoffice facilities.

Furthermore, Verizon shall be required to provide entrance facilities to requesting CLECs over existing loop facilities that are shared with Verizon's retail customers when capacity exists. The fact that a CLEC has requested the shared facilities demonstrates that the CLEC is willing to accept a lesser quality form of interconnection, and the performance limitations that such lesser quality interconnection may entail. In order to accommodate CLECs seeking this form of interconnection, Verizon is directed to provide within thirty (30)

days of accepting the conditions in this letter, a Model Interconnection Agreement amendment that can be adopted by CLECs seeking this form of interconnection with Verizon. This amendment shall be filed with and must be approved by the Commission. In addition, the Collaborative shall consider the issue of what metrics and PAP will apply in this situation. The Commission intends to monitor Verizon's provision of these facilities while the Collaborative is considering this issue.

The Commission is aware that many issues pertaining to interconnection trunking over loop facilities are under consideration in a separate Commission proceeding, Case No. 8881. The Commission believes that this proceeding will resolve the majority of the issues pertaining to this aspect of entrance facilities, and determine if any barriers to competition exist.

6. Enhanced Extend Loops

An Enhanced Extended Loop ("EEL") consists of a combination of an unbundled loop, multiplexing/concentrating equipment, and dedicated transport. The record in this proceeding suggests that Verizon's requirement that CLECs order the component parts of EELs in a sequential, rather than a coordinated, manner requires CLECs to pay for facilities before they are assembled in useful form. Thus, the process by which Verizon requires CLECs to order EELs creates unwarranted delay and additional costs.

Evidence presented in this proceeding demonstrates that a different ordering process currently is being used in Massachusetts. The Commission hereby requires that Verizon adopt in Maryland the tariffed Massachusetts EEL ordering and billing process. In order to accommodate CLECs seeking EELs, Verizon is directed to provide to the Commission, within thirty (30) days of accepting the condition in this letter, a Model Interconnection Agreement amendment that can be adopted by any CLEC seeking this form of UNE. This amendment shall be filed with and must be approved by the Commission.

7. Line Sharing

Line sharing occurs when an incumbent is providing, and continues to provide, voice service on a particular loop to which a CLEC provides or seeks access in order to provide xDSL service. According to the evidence presented, where an end user formerly was provided voice and data services by Verizon and chooses to receive its voice services from a CLEC, the end user will lose its data or DSL services from Verizon. The Commission is extremely concerned about this potential side effect on a consumer's decision to engage in choice – that is that the customer has to weigh its desire to maintain its DSL service against its decision to select a competitive local exchange provider. The Commission is pleased that Verizon has indicated that it is willing to enter into technical and business discussions with CLECs to attempt to arrange the relationships necessary to make such a consumer decision unnecessary. Such an offer addresses the Commission's public interest concerns pertaining to this issue. The Commission directs that Verizon make the offer available to all CLECs.

8. Metrics Replication

The Commission recognizes the need to ensure that Verizon's performance in providing service to CLECs continues and improves after Verizon enters the long distance market in Maryland. For this reason, the Commission approved both the Carrier-to-Carrier Guidelines and the Performance Assurance Plan ("PAP"). The Commission relies upon Verizon to provide the metrics reports that measure Verizon's performance and trigger the payments applicable under the PAP.

In order to better ensure the accuracy of these reports, Verizon is directed to file exception reports refiling those metrics found to be in error. The metrics are to be corrected where the discovered error has an effect on the aggregate calculation of PAP remedies in excess of $1,000. This refiling shall occur in any instance where an error has been noted and corrected, regardless of what party discovers the error. After six months experience, the Commission will evaluate the need to continue this refiling requirement.

Furthermore, an ability to replicate the metrics reports provided by Verizon will allow the Commission to verify the accuracy of the metrics measuring Verizon's performance. The Commission shall require that Verizon, upon request of the Commission, hire a consultant who shall report directly to the Commission and shall train the Commission Staff on how to set up Maryland Performance Metrics replication. After the consultant is hired, Verizon shall provide Staff access to the Metrics Hotline to answer questions that may arise concerning the complementation of the Guidelines and shall cooperate with Staff to provide the data required to allow Staff to conduct replication as necessary to confirm the accuracy of Verizon's performance reports.

9. Directory Listing and Related Charges

The Virginia State Corporation Commission's OSS test did not include a meaningful examination of the accuracy of directory listings. The Commission is concerned that directory errors, both white and yellow pages, cause disruption to CLECs disproportionately. Thus, this Commission will be carefully monitoring directory listing errors, and will, if necessary, institute a special proceeding to address any concerns.

Further, testimony in this proceeding indicates that Verizon encourages CLECs to use the Directory Listing Inquiry pre-order query in order to ensure the accuracy of White Pages Listings. Verizon expressly stated that the Company currently does not charge for this inquiry. However, Verizon's Model Interconnection Agreement includes a charge for pre-order queries that includes the Directory Listing Inquiry. Since Verizon does not charge for this inquiry in Maryland, Verizon is hereby directed to amend its Model Interconnection Agreement used in Maryland within thirty (30) days of accepting the condition in this letter to indicate that no charges apply. Furthermore, Verizon is hereby prohibited from instituting such a charge unless the Company first obtains the approval of this Commission.

10. Unbundled Network Element ("UNE") Pricing

The record in this proceeding supports a finding that establishing an appropriate level of UNE rates, in particular UNE-P, is essential in encouraging competitive entry into the Maryland market. In Case No. 8879, the Commission currently is completing a comprehensive resetting of UNE rates. The Commission intends to complete that case and issue a final order soon.

The Commission concludes that permitting Verizon to continue charging the currently effective UNE rates will not adequately promote full-scale market entry in Maryland. The Commission is particularly concerned about the loop rate and the unbundled switching rate. Accordingly, Verizon is directed to reduce these rates in the manner described below.

With regard to the UNE loop rate, the Commission requires Verizon to agree to reduce this rate from the current statewide average of $14.50 to a statewide average of $12.00. Additionally, Verizon is required to reduce its end-office per minute-of-use switching element 56% from $0.003800 per minute to $0.001676 per minute. Finally, for the other rates previously instituted in Case No. 8731, Phase II, Verizon is directed to adopt an interim rate-setting approach similar to that the Company employed and the FCC approved in Verizon Virginia's § 271 filing. The Commission directs Verizon to file a list of these rates with the Commission at the same time that the Company accepts this condition.

Moreover, the Commission also requires that Verizon commit to make the rates adopted in Case No. 8879 retroactive to the effective date of the reduced rates discussed above. The effective date of these reduced rates shall be within five days of the date of this letter.

Finally, in the event that the Order issued in Case No. 8879 is subsequently overturned an appeal, Verizon shall commit to reinstituting the rates set forth above until such time as the Commission reconsiders the decision rendered in Case No. 8879 to the extent required by the Court.

11. Additional Policy Concerns

In addition to the conditions contained in numbered paragraphs 1 through 10 of this letter to which Verizon must respond, the Commission also has several policy concerns pertaining to competition within the State of Maryland.

A. Retention of the UNE-Platform

The Commission is extremely concerned that the FCC is considering modifications to the list of Unbundled Network Elements ("UNEs") and the availability of UNE-Platform ("UNE-P"). On November 20, 2002, this Commission, along 75 other State Commissioners from 33 other states, signed a letter to the FCC indicating support for continued State flexibility to maintain the UNE-P. The evidence in this proceeding demonstrates that

increased competition in Maryland exists in large measure because of the availability of UNE-P. With very limited UNE-P and resale, Maryland achieved a local competition level of only 4% as of December 2001. In six months time, according to the FCC's most recent report on the status of local competition, Maryland went from 4% to 6% in the level of competition due primarily to UNE-P. It appears that without UNE-P that growth vector will clearly be reduced. The Commission believes that any alteration from UNE-P as presently constituted would have significant adverse effects on the competitive market in Maryland. However, the Commission continues to assert that a FCC determination on these matters will not preempt further consideration by this Commission of the appropriate list of UNEs in Maryland.

B. §272/Affiliates

The Commission is concerned that Verizon's interactions with its affiliates are conducted on the same arms-length basis as its interactions with any unrelated CLEC, in order to ensure that local exchange customers do not subsidize the long distance customers. Consequently, the Commission intends to closely and actively monitor Verizon's compliance with the separate affiliate requirements and associated safeguards contained in §272 of the 1996 Act. In particular, the Commission will carefully review the biennial audit that Verizon is required to obtain and pay for under §272(d)(1), which audit must be submitted to this Commission in accordance with §272(d)(2). Furthermore, the Commission will participate fully in the biennial audit proceedings conducted by the FCC, and institute its own proceeding, if necessary.

C. E911

The Commission has reservations about Verizon's use of the information contained in the E911 database, which does not appear to be consistent with the purposes envisioned by the legislature when the E911 program was established. The E911 database was developed for a very specific purpose, to enable law enforcement and emergency service workers to locate people in emergency, and sometimes life threatening, situations. The E911 database was not developed for use in the manner Verizon has attempted to use it in this proceeding. Because the E911 database was not developed to provide local exchange carrier line counts, its use for this purpose is questionable, as are the results obtained through the database. Furthermore, these results are not verifiable. The Commission encourages Verizon to develop a more transparent and verifiable source of statistics to estimate the level of competition.

CONCLUSION

Upon implementation of these various operational enhancements, the Commission believes that continued development of a competitive market will occur in Maryland. That outcome is surely the intent of the 1996 Act and the FCC's goal as well. Thus, the envisioned reward of long distance entry to Verizon Maryland should be afforded them. To move Maryland more toward the national average in local competition is an outcome that will also surely benefit Maryland customers, both business customers and individual citizens alike.

Verizon is directed to respond to this letter with a written confirmation that Verizon will comply with the conditions set forth in items 1 through 10 above prior to filing its §271 application with the FCC.

By Direction of the Commission,

/s/*Catherine I. Riley*
Catherine I. Riley, Chairman

/s/*J. Joseph Curran, III*
J. Joseph Curran, III, Commissioner

/s/*Gail C. McDonald*
Gail C. McDonald, Commissioner

/s/*Harold D. Williams*
Harold D. Williams, Commissioner

cc: All Parties and Interested Persons of Record