WILKINSON) BARKER) KNAUER) LLP

2300 N STREET, NW
SUITE 700
WASHINGTON, DC 20037
TEL 202.783.4141
FAX 202.783.5851
www.wbklaw.com
L. CHARLES KELLER
202.383.3414
ckeller@wbklaw.com

April 23, 2003

VIA ELECTRONIC FILING

Marlene H. Dortch
Secretary
Federal Communications Commission
445 - 12th Street, S.W.
Room TW-A325
Washington, D.C. 20554

Re: *Notice of Ex Parte Presentation – CC Docket No. 01-92*

Dear Ms. Dortch:

This is to inform you that, on April 22, 2003, Charon Harris, Regulatory Counsel, and the undersigned, on behalf of Verizon Wireless, met with William Maher, Chief, Jane Jackson, Associate Chief, and Joshua Swift, Legal Counsel, Wireline Competition Bureau. This meeting was a continuation of our meeting of April 11, 2003[1] discussing CMRS interconnection issues in the above-referenced docket.

Verizon Wireless elaborated on its argument that the Commission should grant Sprint's petition for declaratory ruling and clarify that all carriers must load into their switches the rating and routing points provided by the carrier to which NANPA has granted the numbers.[2] Verizon Wireless pointed out that wireless carriers' ability to obtain numbers in the rural portions of their service territory is crucial to their ability to provide service there, and that direct interconnection

---

[1] Letter from L. Charles Keller, counsel to Verizon Wireless, to Marlene H. Dortch, Secretary, FCC, CC Docket 01-92 (filed April 14, 2003).

[2] *Comment Sought on Sprint Petition for Declaratory Ruling Regarding the Rating and Routing of Traffic By ILECs*, Public Notice, 17 FCC Rcd 13859 (2002).

with rural ILECs' end-office switches frequently is uneconomic given the volume of traffic exchanged. We stated that whether tandem operators have a duty to provide transiting services is not pivotal to the case; rather, the Commission merely must resolve carriers' obligation to load numbers as directed.

Verizon Wireless also urged the Commission to grant US LEC's petition upholding CLECs' rights to assess access charges for access services jointly provided with CMRS carriers.[3] The joint biling for such services is specifically sanctioned by industry agreement per the Open Billing Forum ("OBF") of the Alliance for Telecommunications Industry Solutions ("ATIS") in its Multiple Exchange Carrier Access Billing ("MECAB") document.[4]

Finally, Verizon Wireless observed that, while the approach to local reciprocal compensation issues discussed above are the best solutions *presently* available to these problems, the best *long-term* solution is probably the adoption of a bill-and-keep system, such as the SYBAK system proposed by Verizon Wireless and Verizon Communications in this docket.[5]

Respectfully submitted,

WILKINSON BARKER KNAUER, LLP

By: /s/
L. Charles Keller

Attachments

cc: William Maher
Jane Jackson
Joshua Swift
Charon Harris

---

[3] *See Comment Sought on Petitions for Declaratory Ruling Regarding Inter-carrier Compensation for Wireless Traffic*, Public Notice, 17 FCC Rcd 19046 (2002).

[4] ATIS MECAB document attached as Exhibit 1.

[5] *See* Verizon/Verizon Wireless SYBAK Proposal, chart attached as Exhibit 2.

Exhibit 1

ATIS/OBF-MECAB-007
Issue 7, February 2001

Copyright © 2001 by the Alliance for Telecommunications Industry Solutions Inc.
All rights reserved.

The Multiple Exchange Carrier Access Billing (MECAB) document, February, 2001, is copyrighted, printed and distributed by the Alliance for Telecommunications Industry Solutions (ATIS) on behalf of the ATIS-sponsored Ordering and Billing Forum (OBF).

Except as expressly permitted, no part of this publication may be reproduced or distributed in any form, in an electronic retrieval system or otherwise, without the prior express written permission of ATIS. All requests to reproduce this document shall be in writing and sent to: OBF Manager, c/o ATIS, 1200 G Street, NW, Suite 500, Washington, DC 20005. OBF Funding Companies (which is defined in the OBF Guidelines) should refer to the OBF Guidelines and respects their rights to reproduce this publication.

For ordering information, please contact:

Mike Nichols, OBF Manager
ATIS
1200 G Street N.W., Suite 500
Washington, DC 20005

(202) 434-8822
mnichol@atis.org

A complete OBF Document Catalog and Ordering Form is available on the ATIS Web Site at: http:/www.atis.org/atis/clc/obf/obfdocs.htm

1. PREFACE

Effective January 1, 2001 the process outlined in MECAB Issue 7, which allows companies to utilize their own recordings for access and interconnection billing, may be implemented.

The use of EMI Category 11-50-01 through 04 and 11-50-21 through 24 meetpoint summary usage records, for billing of access and interconnection services, will be discontinued effective August 31, 2002.

This document contains the recommended guidelines for the billing of access and interconnection services provided to a customer by two or more providers or by one provider in two or more states within a single LATA. Access and interconnection services may be billed as usage-sensitive and flat rated charges, which may include intraLATA non-subscribed toll, wireless and local services. Examples of Usage-Sensitive Services are Feature Group B (FGB), Feature Group C (FGC), Feature Group D (FGD), Wireless Services [Type 1 (Line Side Service), Type 2A (Trunk Side Tandem Service) and Type 2B (Trunk Side End Office Service)], trunk side connections (e.g., BSA), and Directory Assistance (DA) Transport. Examples of Flat-Rated Services are WATS Access Lines (WALs), Dedicated Access Lines (DALs), Hicap, two-point, multi-point services, direct/local transport and DA transport. This document also addresses the billing of jointly provided Feature Group A (FGA) line side BSA services in Section 9 of this document.

Types of customers and providers are as follows but are not limited to those below.

- End User: A customer who occupies premises that utilizes retail telephone services provided by telecommunications carriers. They may order other services such as access.
- IXC: Interexchange Carrier (Also referred to as IC). A long distance company that carries traffic between local exchange carriers.
- LEC: Local Exchange Carrier. A Company providing local telephone service. This term could include the following entities:
    1. CLEC: Competitive Local Exchange Carrier. A Company, which competes by providing it's own switching and/or network, or by purchasing unbundled network elements from an established local telephone provider. This term is meant to distinguish a new or potential competitor from the established local exchange provider.
    2. ILEC: Incumbent Local Exchange Carrier. A Company providing the connection to the end user's premise and access to the long distance network prior to the introduction of local competition. It is the established Regional Bell Operating Company or Independent Company.
    3. ULEC: Unbundled Local Exchange Carrier. A Company that provides local, intraLATA toll and access service by purchasing one or more unbundled network elements from another company. This includes only buying dial tone (port) or the entire platform of elements (UNE-P).
    4. USP: Unbundled Service Provider. A Company (CLEC or ILEC) that has sold one or more network elements to another company in order for them to provide local, intraLATA toll and access services.
    5. WSP: Wireless Service Provider (which includes CMRS (Commercial Mobile Radio Service), PCS (Personal Communication Services), etc.). A company whose network provides service to an end user through the use of airwave signals.

These guidelines were developed by the Billing Committee of the Ordering and Billing Forum (OBF). The Multiple Exchange Carrier Access Billing (MECAB) document (dated November 9, 1987) was changed to reflect the FGA/FGB meet-point Billing Task Force Report dated December 8, 1988. The Federal Communications Commission requested the report in its October 4, 1988 Order in CC Docket No. 87-579. The Commission addressed the report in its Memorandum Opinion and Order (MO&O) of October 5, 1989. This revised MECAB document also incorporates the resolution statements of recent OBF issues.

The OBF is a voluntary, self-policing group of provider and customer participants. They meet to identify, discuss, and resolve national issues concerning the ordering and billing of access and interconnection services. The OBF is under the auspices of the Carrier Liaison Committee (CLC) of the Alliance for Telecommunications Industry Solutions (ATIS). The Federal Communications Commission (FCC) authorized the CLC in a MO&O released January 17, 1985.

This document provides industry guidelines for meet-point Billing (MPB) options. This document addresses the following:

- Common service identifiers
- Calculation of transport mileage
- Identification of the involved providers
- Provider to provider transfer of adjustment information and usage data
- MPB conversion and notification procedures.

This document identifies common data elements critical for the provision of verifiable and auditable bills in multiple provider situations and provides procedures for making common data elements and other data available to all providers, depending on the billing option selected.

The bill displays that appear are for illustrative purposes only. The Carrier Access Billing System Billing Output Specifications (CABS BOS®) documentation contains the industry standards for CABS access paper bills, bill data tapes and customer service records. The Small Exchange Carrier Access Billing (SECAB) Guidelines contain similar standards for paper and mechanized bills and inventory and rating information for the providers whose access bills do not conform to the CABS BOS.

Refer to CABS BOS and the SECAB for the current standards for billing outputs.

4.3.1.1 Single Bill-Multiple Tariff

The billing company agrees to prepare a single access or interconnection bill, with each provider's charges separately identified by rate element and usage detail using the state level company code found in NECA Tariff FCC. No. 4. A summary page totaling the charges by provider state level company code is included. The tariff or contract rates provided to the billing company must include all charges applicable to the meet-point billed services. The provider charges refer to one time charges, recurring charges, usage, OC&C, adjustments, etc. This alternative requires that the billing company administers in its billing system the applicable tariff or contract rates and rate changes for all providers involved in the provisioning of services Rate change dates may not coincide where multiple providers are involved in a service. A non-billing company should notify their billing company of its rate change in a timely manner.

Separate checks can be rendered by the customer and mailed directly to each provider, or to the billing provider for distribution as indicated in the letter of authorization. If the non-billing provider receives payment directly from the customer, the non-billing provider must notify the billing provider of the payment. The billing provider is then responsible for applying each payment to the appropriate provider's balance due. Where a single check is selected as the payment arrangement, the non-billing provider must provide a letter of authorization to notify the customer to send only a single check to the billing provider.

Information must be communicated among the providers involved to render a single bill using the multiple tariff alternative. Application and interpretation of the non-billing company's rates must also be communicated to the billing company for incorporation into the billing system. The service order, payment and rate information must be maintained by the billing company on an ongoing basis and requires the cooperation of the providers. Usage data is transmitted to the billing company for input to the billing system. The billing company renders a single bill to the customer and returns financial information to the provider, which may include a copy of the bill. The customer then remits payment either directly to each provider or to the billing company for distribution based on the contractual arrangements between the providers. The customer is referred to the contact number on the bill for billing inquiries. Resolution of billing inquiries may involve all providers.

4.3.1.2 Single Bill-Single Tariff

The billing company agrees to prepare a single access or interconnection bill based upon their rate structure. Usage data is transmitted from the recording point for input into the billing system. The billing company renders a bill to the customer for all portions of the service. The other providers render a bill to the billing company for that portion of the service they provide. The customer remits payment to the billing company. The billing company remits payment to the other providers.

4.3.2 Multiple Bill Option

The Multiple Bill option allows each provider to bill the customer for its portion of a jointly provided access or interconnection service. In this scenario each provider establishes its own billing account. The bills under this option are rendered at a level previously established by the provider in a non-MPB environment. The detail requirements for rendering Multiple meet-point Bills are provided in Sections 5 through 8 of this document.

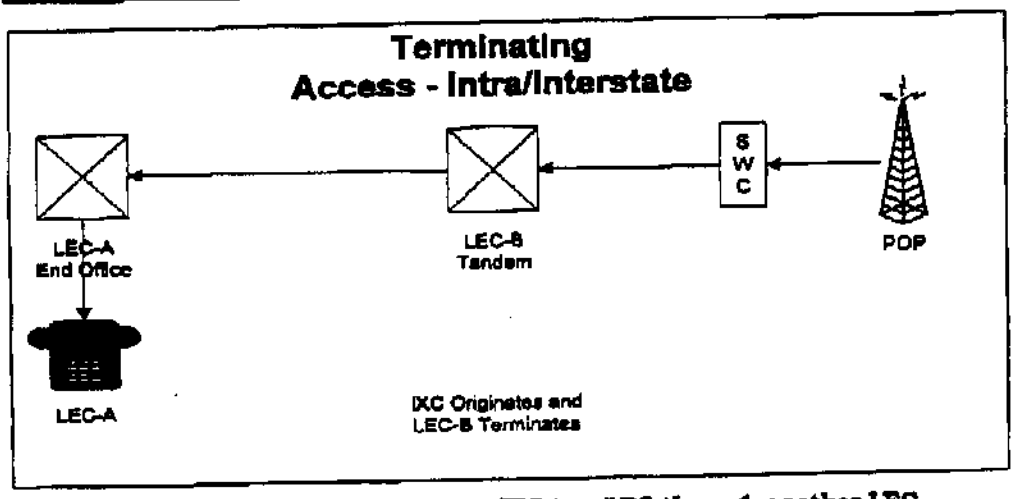

Figure 6-8 Terminating access from an IXC to a LEC through another LEC

Notification Information
Both LECs will provide customer notification information to the IXC in accordance with Section 5.

Record Exchange
For a single bill option, when LEC-A is the bill rendering company, LEC-B will provide an access record to LEC-A to bill the IXC. When LEC-B is the bill rendering company, they will use their recordings to bill the IXC.

For a multiple bill option, LEC-B will use their recordings to bill their portion of access to the IXC. LEC-B will provide the access record to LEC-A for them to bill their portion of access to the IXC.

For additional information on billing options, refer to Section 4 of this document.

Bill Verification
The IXC has their recordings and the customer notification information to handle their verification requirements.

Footnote: For the purpose of this diagram LECs would include CLEC, ILEC and WSP.

Exhibit 2

Verizon/Verizon Wireless SYBAK Proposal

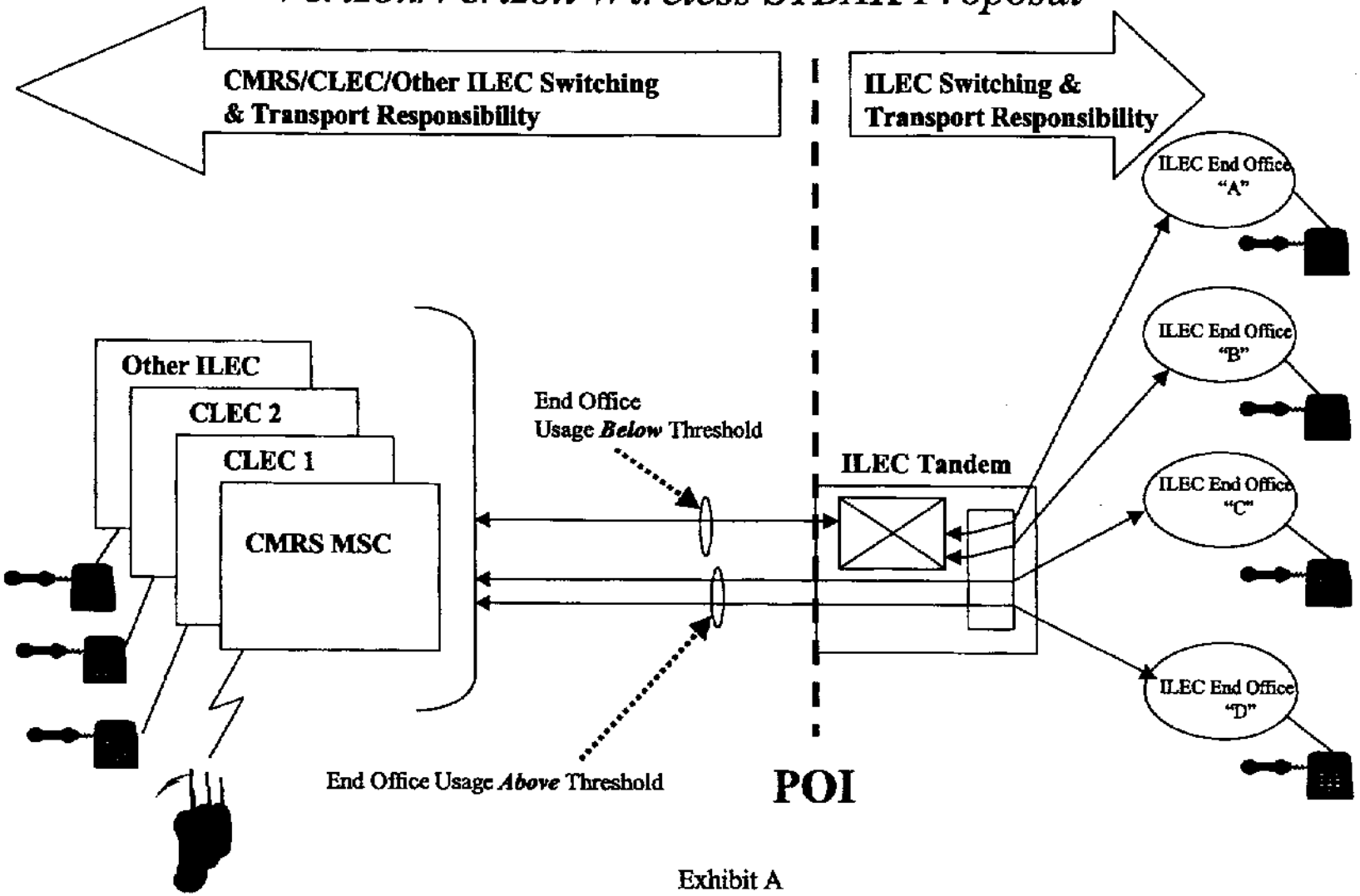

Exhibit A