Before the
FEDERAL COMMUNICATIONS COMMISSION
WASHINGTON, D.C. 20554

In the Matter of	)	
	)	
Flexibility for Delivery of Communications by	)	
Mobile Satellite Service Providers in the 2 GHz	)	IB Docket No. 01-185
Band, the L-Band, and the 1.6/2.4 GHz Bands	)	

PETITION FOR RECONSIDERATION AND CLARIFICATION OF INMARSAT VENTURES PLC

Gary M. Epstein
John P. Janka
Alexander D. Hoehn-Saric
LATHAM & WATKINS LLP
555 11th Street, N.W.
Suite 1000
Washington, D.C. 20004
(202) 637-2200 (phone)
(202) 637-2201 (fax)

Counsel for INMARSAT VENTURES PLC

July 7, 2003

SUMMARY

Throughout this proceeding, Inmarsat has expressed concern that, if not adequately constrained, ATC deployment could cause harmful interference into Inmarsat's MSS system, both within and outside the United States. There are two main interference scenarios: (i) interference into Inmarsat spacecraft, and (ii) interference into Inmarsat mobile terminals. The Commission has addressed both scenarios in its ATC service rules.

With respect to ATC interference into Inmarsat spacecraft, Inmarsat is pleased that the Commission's analysis of interference from an assumed "baseline" ATC architecture *in the L-Band* is easily reconciled with Inmarsat's technical analyses. Furthermore, the Commission-mandated technical limitations on ATC power levels and the total number of ATC transmitters promise to constrain ATC interference. However, the protections the Commission has adopted are effective only so far as (i) the analysis upon which the Commission based its limits are in turn founded on accurate and reliable assumptions, and (ii) those protections appropriately recognize and are modified to take into account any proposed ATC and satellite architectures that vary from the Commission's baseline assumptions.

A key requirement that the Commission adopted to constrain the level of interference caused by ATC mobile terminals appears to be very difficult to enforce in practice, and, at a minimum, needs to be clarified. Specifically, the Commission requires that ATC operators design their system so that increased power levels needed to penetrate buildings are used only to provide indoor service and not to overcome other obstacles or to extend cell coverage. Inmarsat believes that it will be extremely difficult, as a practical matter, to ensure that ATC operators actually constrain full power operations to only instances where the mobile terminals operate indoors. If this "structural attenuation" requirement is not complied with, the number of ATC base stations (which support the ATC mobile terminals) necessary to cause

harmful interference into Inmarsat spacecraft would be far lower than the 1725 limit contained in the ATC service rules. Because of the vital importance of this requirement, Inmarsat requests that this restriction be clearly incorporated into the ATC service rules, and that the Commission require that ATC applicants clearly demonstrate how network operations will ensure that increased power levels will be used only indoors and not to extend coverage outdoors.

In addition, the Commission based its protection of Inmarsat spacecraft on the assumption that Mobile Satellite Ventures LLC's ("MSV's") next generation satellite antenna peak gain would be different (1.5 dBi lower) than the value specified by MSV in its *ex parte* filings. Inmarsat, therefore, requests that the Commission adjust its limitation on the number of permissible ATC base stations per channel to reflect the value that MSV has specified.

With respect to protecting Inmarsat spacecraft from adjacent channel interference, the text of the *Order* specifies limits on the number of simultaneous transmitting ATC mobile terminals. Inmarsat requests that this 90,000 terminal limit be expressly included in the ATC service rules, and that the Commission clarify that the limit is a cap on total number of mobile terminals that can be deployed by all potential ATC licensees in the L-Band. Moreover, Inmarsat requests that the Commission adopt appropriate limits to constrain interference into Inmarsat spacecraft from ATC deployment *in the adjacent "Big LEO" band*, an issue that Inmarsat previously raised, but that the Commission did not discuss in the *Order*.

With respect to interference into Inmarsat mobile terminals operating within the United States, the Commission misinterpreted certain ARINC specifications and overstated the capability of other Inmarsat terminals to reject out-of-band signals, and therefore made wrong assumptions about the susceptibility of Inmarsat mobile terminals to receiving interference from nearby, high-powered, ATC base station transmitters. Inmarsat provides, as part of this

submission, test reports from manufacturers of Inmarsat terminals demonstrating that the Commission's assumptions are wrong. Inmarsat therefore requests that the Commission adjust certain of its ATC service rules that limit the deployment of ATC base stations to take into account this information.

The other issues that Inmarsat raises below relate to the need to establish and maintain a regulatory regime, which ensures that ATC applicants honor and abide by the interference protections contained in the *Order* and new ATC service rules. To this end, Inmarsat urges that the Commission (i) specifically incorporate into its ATC service rules other ATC limits articulated and assumed in the text of the *Order*, (ii) place on public notice, and provide the opportunity for comment on, all ATC applications, especially those that seek authorization to operate at variance from the "baseline" ATC and satellite systems assumed in the ATC service rules, and (iii) adopt certain reporting requirements with respect to actual ATC deployment.

TABLE OF CONTENTS

PAGE

SUMMARY i

BACKGROUND 2

DISCUSSION 6

I. CERTAIN ADJUSTMENTS TO ATC RULES ARE NECESSARY 6

A. Uplink Band Interference 7
1. Co-Channel Interference 7
a. The Commission Must Ensure that the 18 dB Link Margin for Structural Attenuation Is Used Only Indoors 7
b. Adjusting for Stated MSV Satellite Antenna Gain 11
2. Adjacent Channel Interference 12
3. Relevance of Self-Interference Into The Satellites Of ATC Operators 13
4. The Need to Adopt Out-of-Band Emission Limits for Big LEO ATC Systems 15
B. Downlink Band Interference 15

II. TRANSPARENCY IS ESSENTIAL IN THE ATC AUTHORIZATION AND DEPLOYMENT PROCESS 17

A. Public Notice And Comment Are Critical at the Application Phase 19
B. Transparency Is Necessary During The Deployment And Operation Of ATC 23

CONCLUSION 25

Before the
FEDERAL COMMUNICATIONS COMMISSION
WASHINGTON, D.C. 20554

In the Matter of	)	
	)	
Flexibility for Delivery of Communications by	)	
Mobile Satellite Service Providers in the 2 GHz	)	IB Docket No. 01-185
Band, the L-Band, and the 1.6/2.4 GHz Bands	)	

PETITION FOR RECONSIDERATION AND CLARIFICATION OF INMARSAT VENTURES PLC

Inmarsat Ventures PLC ("Inmarsat") hereby files this Petition for Reconsideration and Clarification of the *Order*[1] in this proceeding in which the Commission adopted rules pursuant to which mobile satellite system ("MSS") operators may apply for authorization to provide service in their licensed MSS spectrum using an ancillary terrestrial component ("ATC"). Recognizing the significant risk of harmful interference from ATC into MSS operations in the L-Band, the Commission had adopted a series of restrictions on the deployment of ATC that are designed to limit the interference resulting from ATC operations. These restrictions are based on certain assumptions about the characteristics of the "baseline" ATC and satellite systems that would be designed and deployed. It therefore is essential to the protection of MSS operations that any ATC system that actually is implemented be made consistent with all of these important assumptions. Moreover, it is critical that any potentially affected MSS systems have the opportunity to analyze and comment on specific ATC applications *before* an ATC license is granted (i) in order to address the adequacy of the applicant's required showing of

---

1 *In the Matter of Flexibility for Delivery of Communications by Mobile Satellite Service Providers in the 2 GHz Band, the L-Band, and the 1.6/2.4 GHz Bands; Review of the Spectrum Sharing Plan Among Non-Geostationary Satellite Orbit Mobile Satellite Service Systems in the 1.6/2.4 GHz Bands*, Report and Order and Notice of Proposed Rulemaking, IB Docket No. 01-185 IB Docket No. 02-364 (rel. Feb. 10, 2003) (the "*Order*").

how it will comply with the rules, in particular the requirement to operate at maximum power only while indoors, and (ii) examine any proposed ATC or satellite architecture that varies from the baseline parameters specified in the Commission's Rules.

BACKGROUND

The *Order* represents the culmination of over a year of industry input and substantial analysis by the Commission on the development of ATC. Inmarsat is pleased that the Commission has (i) determined that no ATC system should be authorized unless all MSS systems are adequately protected from harmful interference, (ii) circumscribed the way ATC can be deployed in an effort to preclude such harmful interference from occurring, and (iii) authorized ATC operations only on a secondary, non-harmful interference basis. Inmarsat commends the Commission for its thorough and comprehensive analysis of a complex issue.

Throughout this proceeding, Inmarsat's primary concern has been ensuring that ATC deployment in the L-Band and in the adjacent "Big LEO" Band does not cause harmful interference to Inmarsat's current and future MSS operations. Inmarsat also sought to ensure that ATC operations would not be used, either directly or indirectly, as a basis to demand access to additional scarce L-Band spectrum during international coordination negotiations under the Mexico City MOU. Inmarsat's objections were by no means intended to diminish competition.[2] Rather, Inmarsat's concerns were based solely on sound technical analysis and were intended to ensure that MSS operators, including Inmarsat, would be able to continue to provide MSS service under existing ITU allocations and international coordination agreements without suffering from interference caused by a secondary, terrestrial service. Provided that these

---

[2] *Cf. Order* at ¶ 37 note 91.

concerns are fully addressed, Inmarsat has always indicated that it is not opposed to the concept of ATC.

The Commission has authorized ATC in the L-Band solely on a secondary basis.[3] As secondary service, even those ATC operations that comply with Commission Rules must cease operation if they cause harmful interference to an MSS system.[4] Moreover, the Commission has imposed specific limitations on the deployment of ATC, which are intended to ensure that the interference into MSS operations is constrained. These restrictions were established by analyzing the interference that would be caused by an ATC system operating under certain "baseline" assumptions. As the Commission recognizes throughout the *Order,* the protections it has adopted are effective only so far as (i) the analysis upon which the Commission based its limits are in turn founded on accurate and reliable assumptions, and (ii) those protections appropriately recognize and are modified to take into account any proposed ATC and satellite architectures that vary from the Commission's baseline assumptions.

Inmarsat's analyses of ATC interference into L-Band satellites concluded that, in order to protect MSS operations, the number of simultaneous co-frequency transmissions from ATC mobile terminals would need to be limited. The Commission's own ATC interference analysis differs from Inmarsat's mainly with respect to two parameters: (i) the Commission assumes that L-Band ATC systems must reserve at least a certain amount of mobile terminal transmit power to overcome structural attenuation and may not use that "reserve" power margin

---

3 *See* 47 C.F.R. § 2.105(c)(2) ("Stations of a secondary service: (i) Shall not cause harmful interference to stations of primary services to which frequencies are already assigned or to which frequencies may be assigned at a later date . . . ."); *see also Order* at ¶ 104 ("in the unlikely event that an adjacent MSS or other operator does receive harmful interference from ATC operations, either from ATC base stations or mobile terminals, the ATC operator must resolve such interference").

4 *See Order* at ¶¶ 104 and 214.

to provide outdoor service or extend coverage at the edge of an ATC "cell,"[5] and (ii) the Commission assumes that Mobile Satellite Ventures Subsidiary LLC's ("MSV's") next generation L-Band satellite would be less sensitive to self-interference from ATC than MSV itself has stated.[6] These two parameters account for a difference of almost 20 dB between the Inmarsat and Commission analyses. Taking these factors into account yields an increase of almost *100 times* in the number of ATC transmissions in the L-Band that otherwise might be allowed. In the end, use of these parameters largely reconciles the Commission's analysis of ATC interference into L-Band satellites with Inmarsat's analysis.[7] More important, it highlights the need to ensure that operation in accordance with these parameters is strictly enforced in practice.

---

5 The Commission adopted a requirement that an ATC operator "demonstrate that the cellular structure of the ATC network design includes 18 dB of link margin for structural attenuation," *Order* at App. B § 25.253(a)(8), and prohibited ATC licensees from extending the coverage area of any ATC cell beyond the point where an ATC mobile terminal could operate at the edge of coverage of the ATC with a certain maximum EIRP. *See Order* at ¶ 142. Inmarsat did not assume that an ATC mobile terminal would operate at full power level to overcome signal attenuation *only* when the mobile terminal was indoors. Inmarsat therefore did not provide a general 18 dB factor for "structural attenuation."

6 The Commission assumed that the next-generation MSV satellite's peak antenna gain would be 41 dBi, whereas the peak gain stated by MSV is 42.5 dBi. *See Order* at ¶ 138 and App. C2, Table 1.14.A; *cf. See January 13, 2003 MSV Ex Parte* at Ex. A pp. 17 and 21.

7 If the Commission's analysis is adjusted to reflect the peak antenna gain of the MSV satellite receive antenna, and Inmarsat's analysis is adjusted to incorporated the Commission's new structural attenuation rule, the two analyses would reach essentially the same result. Inmarsat estimated that the number of permissible simultaneous co-channel base station-equivalent transmissions would be limited to about a dozen. The 18 dB structural attenuation allowance credited by the Commission and the difference in MSV satellite gain of 1.5 dB constitutes a 19.5 dB differential or, in practical terms, a factor of almost 100. Removing these two factors in the Commission's analysis would decrease the number of permissible simultaneous co-channel base stations transmissions from 1725 to approximately 19.

The dominant effect of the structural attenuation factor in constraining ATC interference provides a compelling reason why the Commission must provide public notice of, and the opportunity to comment on, any ATC application that is filed. Even if an ATC operator complies with all the other restrictions imposed by the Commission, if its mobile terminals operate at full power while outdoors (*i.e.* at 18 dB higher than otherwise permitted), then a mere 27 ATC base stations operating on the same channel would produce the same interference impact as the 1725 limit set by the Commission based on the assumption that the network would employ an 18 dB structural attenuation factor. Variance in other factors, such as the use of a non-GSM architecture, or the failure to utilize vocoders, similarly could increase the interference potential beyond that assumed in the baseline ATC case reflected in the Commission's Rules.

Therefore, it is critical that (i) ATC applicants fully justify any proposed variations from the baseline ATC parameters, and provide a complete interference analysis that takes into account the changed parameters, (ii) the Commission provide public notice of, and an opportunity to comment on, any ATC application before acting on that application, and (iii) the Commission ensure that ATC operators continue to abide by all of the limits that are an integral part of the Commission's regime for constraining interference from ATC.[8]

Inmarsat's concerns about the need to maintain the integrity of the ATC restrictions on which the Order is based are not theoretical. MSV recently filed an application for ATC authority that sought numerous variances from the ATC service rules promulgated under the *Order,* cursorily described an architecture that is far different than the one assumed by

---

8 *See Order* at ¶ 66 ("We view full and complete compliance with each of the requirements as essential to the integrity of our 'ancillary' licensing regime . . . . Thus, failure of an MSS operator to meet any of the ATC service requirements set forth in our Rules and this Order may result in enforcement action, including the imposition of a monetary forfeiture in addition to the loss of ATC and MSS operating authority.")

the Commission,[9] and proposed to *quadruple* the maximum number of permitted ATC base stations to a level far above the 1725 limit specified in the *Order*. The Commission returned the application because the ATC service rules are not yet in effect and, in addition, noted a number of deficiencies.[10] Although this application no longer is pending, the numerous variances requested and the absence of interference analysis in that application provide a compelling "real world" example of the need to keep the ATC application process open to public review and comment.

Only by placing ATC applications on public notice, providing affected MSS interests with the opportunity to analyze such applications in detail, and requiring full substantiation of any proposed variations from "baseline" ATC assumptions, will the Commission be able to fulfill its commitment to ensure that ATC uses do not cause harmful interference to MSS service.

DISCUSSION

I. CERTAIN ADJUSTMENTS TO ATC RULES ARE NECESSARY

Throughout this proceeding, Inmarsat demonstrated how ATC operations have the potential to cause harmful interference into MSS service. In the *Order*, the Commission recognized the need to protect MSS operations from ATC interference and established a series of limits on the architecture and deployment of ATC. These limits are based on the Commission's estimate of how much interference ATC operations can generate without rising to the level of

---

9 *See In the Matter of Mobile Satellite Ventures Subsidiary LLC,* Application for Minor Modification and Amendment, File No. SAT-MOD-20030694-00110, SAT-MOD-20030694-00111, SES-MOD-20030604-00874 (filed June 4, 2003)("*MSV ATC Application*").

10 *See Letter from Thomas S. Tycz, Chief, Satellite Division, International Bureau of the Federal Communications Commission, to Bruce D. Jacobs, Counsel to MSV*, File No. SAT-MOD-20030694-00110, SAT-MOD-20030694-00111, SES-MOD-20030604-00874 (June 24, 2003) (the "*June 24th Letter*").

"harmful interference." Because the Commission's restrictions on the deployment of ATC are crucial to the protection of MSS operations, it is essential that these limits be fully reflected in the Commission's Rules, that they be based on accurate information, and that all ATC systems actually be deployed in a manner that is consistent with these limits.

A. Uplink Band Interference

1. *Co-Channel Interference*

The Commission has constrained ATC co-channel interference in the L-Band by capping the number of base stations allowed to operate simultaneously on the same channel. Based on certain assumptions about the technical architecture of an ATC system and the associated satellite system, the Commission's baseline ATC architecture limits the number of ATC base stations operating on a 200 kHz channel to no more than 1725.[11] Unfortunately, there are two problems with this limit. First, it is based on an assumption about the use of power from ATC mobile terminals that is not fully reflected in the Commission's Rules, and that may not be enforceable in any event. Second, it is based on an assumption that MSV's next-generation satellite is less sensitive to self-interference from ATC operations than MSV itself has stated.

a. The Commission Must Ensure that the 18 dB Link Margin for Structural Attenuation Is Used Only Indoors

As Inmarsat has previously explained, it is extremely difficult to ensure that any power "reserved" in a mobile terminal to overcome structural attenuation is not actually used during outdoor operations or used to extend edge-of-cell coverage.[12] Because Inmarsat did not believe that there was a reliable method to ensure that any link margin for structural attenuation

---

11 *See Order* at ¶¶ 142-143 and App. C2 at Table 1.14.A.

12 *See, e.g.,* Inmarsat *Ex Parte* Presentation, IB. Docket No. 01-185 at 5-6 (filed Dec. 19, 2002) (pointing out that a major problem with COMTEK's uplink interference assessment is that it assumed that mobile terminals will operate at full power only while indoors).

would be used *solely for indoor transmissions*, Inmarsat limited the impact of structural attenuation in its own analysis and in its estimate of the number of ATC transmissions that could occur without causing harmful interference into MSS service. For the reasons discussed below, Inmarsat still believes that enforcement of such a link margin requirement is extremely difficult, if not impossible. This one element alone has a tremendous impact on the ATC interference analysis -- it allows approximately 63 times more ATC base stations than otherwise would be permitted if there were no 18 dB factor. Compliance with, and effective enforcement of, this Commission limitation therefore is critical to the integrity of the overall ATC regulatory scheme.

New Section 25.253 of the Commission's Rules, as adopted in the *Order*, establishes the parameters under which ATC must operate in order to limit interference to MSS systems in the L-Band. Pursuant to these limits, ATC base stations and mobile terminals must have a 30 dB power control range[13] and an ATC system must be designed to include at least an 18 dB link margin allocated solely to structural attenuation.[14] In other words, the Commission's rules require an ATC mobile terminal to reduce its power by at least 18 dB whenever the mobile terminal is not operating inside a building.

A mobile terminal seeking to communicate with a base station, however, cannot distinguish between (i) the need to increase power because a user walks into a building, (ii) the need to increase power because the user is far from an ATC base station, and (iii) the need to increase power because the path between the user and the base station is blocked by a building or another obstacle. MSS operations may be harmed in situations where the 18 dB link margin intended for *indoor* structural attenuation is actually used to overcome structural or other attenuation while a user is *outdoors*, as in the circumstances described in clauses (ii) and (iii)

---

13 *See Order* at App. B § 25.253(a)(1).

14 *See Order* at App. B § 25.253(a)(8).

above. For example, a building may be located between a base station and a mobile terminal being used outside, resulting in the mobile terminal increasing transmit power in order to close the link. The same mobile terminal, however, may have a clear line of sight to an Inmarsat satellite. Without a practical method of ensuring that the 18 dB link margin is used solely to overcome structural attenuation while the mobile terminal is operated indoors, Inmarsat remains concerned that this requirement will not, in practice, achieve the Commission's intended result of controlling interference and that Inmarsat's spacecraft will suffer significantly more interference from ATC than is intended under the ATC service rules.

A second concern is the increased power levels that mobile terminals may use, in practice, at the edge of the cells in an ATC network. It is common practice for cellular and PCS networks to be planned with little margin at the edge of a cell, to allow an operator to cover the largest possible geographic area with the fewest base stations. Doing so in the ATC context therefore would be not only economically rational, but also fully consistent with practice in the mobile terrestrial communications industry. Moreover, an ATC operator would have the incentive to cover as much geographic area as possible with the fewest base stations (and hence operate with little margin at the edge of cells), not just for economic reasons, but also because of the Commission's limit on the total number of permitted ATC base stations. However, such a practice also would increase the uplink interference into L-Band MSS spacecraft, such as Inmarsat's, far beyond the level that is assumed under the Commission's analysis and the new ATC rules.

To try to address this problem, the Commission adopts in the *Order* a very specific requirement that "MSS licensees shall not extend the coverage area of any ATC cell beyond the point where an ATC MT could operate at the edge of coverage of the ATC cell with

a maximum EIRP of –10 dBW."[15] As an initial matter, two clarifications of this requirement are warranted. First, to be consistent with the 18 dB link margin requirement discussed above, it appears that the Commission intended that this maximum EIRP at the edge of a cell should be limited to –18 dBW, rather than –10 dBW. Second, this very specific requirement in the *Order* about not extending edge of cell coverage is not reflected in the text of the Commission's new ATC service rules. Because of the importance of this limit, Inmarsat requests that the Commission modify Section 25.253 of its Rules to specifically reflect this requirement and clarify that the relevant value for this purpose is –18 dBW.

There is a typographical error in paragraph 142 of the *Order*, which also should be corrected for the record. In that paragraph, the Commission references a 10 dB (versus an 18 dB) margin when discussing the required link margin for power control that is to be used solely for overcoming structural attenuation.[16] As discussed above, at numerous points in the text and supporting analysis of the *Order*,[17] the Commission states that it relies upon a structural attenuation of 18 dB to justify the interference limits it establishes in the new Rules.[18] Thus, it is clear that the Commission assumes and relies upon a link margin of 18 dB to support the interference analysis upon which its Rules are based. It is only in paragraph 142, that a link margin of "10 dB" is used with reference to structural attenuation. To avoid confusion, Inmarsat

---

15 *See Order* at ¶ 142.

16 *See Id.*

17 *See, e.g., Order* at App. C2 §§ 1.2 and Table 1.14.A.

18 *See Order* at App. B. § 25.253(a)(8). For example, technical appendix C2 to the *Order* states that "[a]s shown in Table 1.14.A, limiting the number of simultaneously transmitting MTs to about 1725 will limit the noise increase at the MSV satellite receiver to 0.25 dB. This number of base station carriers, or equivalently, the number of MTs on a channel, is predicated on three important assumptions . . . 3) that the ATC cells will be designed so that, at a minimum, 18 dB of structural attenuation margin is reserved within the link budget (see section 1.2)." *See Order* at App. C2 § 1.14.

requests that the Commission correct the statement in paragraph 142 of the *Order* to reflect that 18 dB is the required minimum link margin that must be reserved and used solely indoors to overcome the effects of structural attenuation. Any other interpretation would be inconsistent with the rest of the *Order*.

In order to ensure that the 18 dB link margin requirement is adequately addressed in the licensing process, it is critical that the Commission require that ATC applicants provide a full description of the ATC architecture that they will use to comply the Commission's Rules, a full and detailed "demonstrat[ion] that the cellular structure of the ATC network design includes 18 dB of link margin allocated to structural attenuation,"[19] and an appropriate showing that this margin will be used only for indoor service. As the Commission noted in another licensing context, it is not sufficient to accept a mere certification that a Commission requirement has been met,[20] especially where, as here, the economic interests of the licensee are contrary to the dictates of the rule. Moreover, the novel and untested nature of ATC systems, and the critical nature of this 18 dB requirement, warrant that the Commission provide the public with the opportunity to comment on the proposed architecture of *any* applied-for ATC system.

b. Adjusting for Stated MSV Satellite Antenna Gain

The starting point for the Commission's ATC limits in the L-Band is a calculation of the level of self-interference that an ATC operator would cause to its own MSS system. Specifically, the Commission calculated the scope of ATC deployment that would cause a certain level of interference to MSV's satellite network, and then concluded that Inmarsat's network similarly would be protected from ATC interference for a number of reasons. As part of

---

19 *See Order* at App. B § 25.253(a)(8).

20 *In the Matter of Amendment of the Commission's Space Station Licensing Rules and Policies and Mitigation of Orbital Debris*, First Report and Order and Further Notice of Proposed Rulemaking, IB Docket No. 02-34 and 02-54 at ¶ 185 (rel. May 19, 2003).

this analysis, the Commission appears to have assumed that the peak gain of a receive antenna on the next generation MSV satellite antenna gain would be 41 dBi.[21] MSV, however, stated that the *peak gain* on its system would be 42.5 dBi,[22] and that 41 dBi is expected to be the *average gain* across its satellite beam.[23]

In the abstract, a satellite gain increase of 1.5 dBi is not very large. In this context, however, the difference is significant because it correspondingly would increase by 1.5 dB the noise (i.e., self-interference) generated by ATC. If one took this 1.5 dB adjustment into consideration in the Commission's calculation of the expected level of self-interference from L-Band ATC systems, the number of permissible MSV ATC base stations per channel would decrease to 1221 (from 1725). Inmarsat urges the Commission to reevaluate its ATC base station limits in the L-Band based on this adjustment to the assumed MSV satellite gain.

2. *Adjacent Channel Interference*

The Commission appropriately recognizes that adjacent channel emissions from ATC operations also must be restricted in order to protect MSS systems from interference. Accordingly, to constrain out-of-band emissions in the L-Band, the *Order* limits the number of simultaneous transmitting ATC mobile terminals to no more than 90,000.[24] However, this important limitation is not reflected in the text of the ATC service rules. This restriction is one of the fundamental underpinnings of the Commission's analysis, and is a key element in the overall scheme for protecting MSS systems in the L-Band from harmful interference generated by ATC. In order to ensure awareness and compliance by ATC applicants and licensees with the

---

21 *See Order* at App. C2, Table 1.14.A.

22 *See January 13, 2003 MSV Ex Parte* at Ex. A p.17.

23 *See January 13, 2003 MSV Ex Parte* at Ex. A p.21.

24 *See Order* at ¶ 188.

Commission's directive, Inmarsat requests that the 90,000 ATC mobile terminal restriction be explicitly incorporated into the ATC service rules in Part 25.

Inmarsat also seeks clarification that the 90,000 limit on simultaneous mobile terminal transmissions is an aggregate limit on all ATC operations in the L-Band, not a separate limit for each licensed ATC system in the L-Band. Any other interpretation would have no relationship to the assumptions underlying the interference analysis conducted by the Commission. If, for example, the 90,000 limit were interpreted to be a per-operator limit, and if MSV, TMI, and Inmarsat each sought to implement ATC separately, a total of 270,000 simultaneous ATC mobile terminal transmissions could occur. The Commission's analysis of ATC interference, however, is explicitly based on the assumption that the total number of ATC mobile terminals simultaneously operating in the L-Band will be 90,000 or less.[25] Therefore, in order to be rationally related to the underlying analysis, the 90,000 limit must be imposed as an aggregate cap for simultaneous ATC transmissions from mobile terminals in the L-Band, regardless how many ATC licensees may be authorized in the L-Band.

3. *Relevance of Self-Interference Into The Satellites Of ATC Operators*

As a basis for determining what limits should be placed on ATC operations, the Commission calculated how much allowable self-interference an ATC operator could cause to its own spacecraft.[26] To the extent that ATC operators may in the future assert that their MSS systems can absorb greater levels of self-interference than the 0.25 dB level assumed by the Commission, such assertions should not be countenanced as a basis for relaxing the Commission's ATC limits, permitting increased levels of ATC interference, or allowing those ATC operators to demand access to more MSS spectrum.

---

25 *See Order* at App. C2 § 1.14.

26 *See Order* at ¶¶ 138-143.

If, as a result of growing ATC traffic, an ATC operator were to exceed the 0.25 dB limit, the operator would start causing unacceptable interference into its own MSS satellite system. To maintain the quality of its MSS offering, the ATC operator would then have to reduce the frequency reuse of its combined MSS/ATC system, which would lead to an increase in spectrum requirements. MSV, however, is not permitted to demand access to L-Band spectrum based on its ATC service during operator negotiations under the Mexico City MOU[27] and therefore would be faced with the choice of either (i) limiting its ATC service in accordance with the ATC service rules but contrary to its business interests, or (ii) degrading its satellite service to allow continued growth of its ATC service.

ATC licensees may well have incentives to increase their ATC operations even at the expense of the efficiency or quality of their MSS network. Operators of ATC systems will not be driven by the same business imperatives as operators of "pure" MSS systems. For an ATC operator, it may be economically rational to cause self-interference into its MSS operations, if its ATC service becomes a substantial and growing portion of its business, because enhancing and expanding the ATC network may be more profitable than maintaining high quality MSS operations. It would then be in the business interests of the operator to prioritize service to profitable urban customers (via ATC) over service to less profitable rural ones (via satellite), which could undermine the Commission's goal of facilitating the provision of vital communication services to rural and underserved areas.

Hence, it is vital that the 0.25 dB limit on self-interference into MSS systems generated by ATC operations be maintained, to ensure that the L-band spectrum continues to be

---

27 Recognizing that ATC uses cannot be used to justify spectrum demands under the Mexico City MOU, the Commission has correctly required MSV to base its spectrum requirements in international spectrum negotiations solely on its MSS operations and without taking ATC into account. *See Order* at ¶¶ 186 and 215.

fully available for the provision of high quality MSS service, in particular to rural and underserved areas, and is not gradually transferred to terrestrial services.

4. *The Need to Adopt Out-of-Band Emission Limits for Big LEO ATC Systems*

During the course of this proceeding, in addition to interference from ATC operations at L-Band, Inmarsat raised concerns about the potential for harmful interference into its L-Band system from the deployment of ATC in the Big LEO Band.[28] The *Order* does not address what out-of-band emission limits are appropriate in the Big LEO band, or even acknowledge the issues Inmarsat raised.

Inmarsat requests that the Commission examine the arguments raised earlier in the proceeding and adopt appropriate limits to protect MSS operations in the L-Band from out-of-band interference generated by ATC deployment in the Big LEO Band. These rules could be similar to the out-of band limitations that the Commission imposed upon L-Band ATC operations with respect to systems operating in adjacent spectrum.[29]

B. Downlink Band Interference

The Commission has adopted rules to protect Inmarsat's mobile earth terminals operating near airports, harbors and waterways from interference generated by ATC base stations. These limits are based upon calculations contained in Tables 2.2.1.3.A, 2.2.2.1.A and 2.2.3.2.A of Appendix C2 to the *Order*.[30] However, the overload thresholds assumed by the Commission in these calculations are too high. As a result, greater distances need to be

---

28 *See, e.g., Reply Comments of Inmarsat Ventures plc* at 20-21 and Supplemental Technical Annex at Section 4 (filed Nov. 13, 2001); *Comments of Inmarsat Ventures plc* at Technical Annex at Section 3.2 (filed Oct. 22, 2001).

29 *See, e.g., Order* at App. B, § 25.253(g)(1).

30 *See Order* at ¶ 154 and App. C2, Table 2.2.1.3.A.

maintained between MSV ATC base stations and airports, navigable waterways, and areas of open water than the distances calculated by the Commission.

Reports from two terminal manufacturers are attached to this petition, which demonstrate why the overload threshold values used in the Commission's analysis are incorrect.[31] One of these manufacturers, NERA, addresses the interference sensitivity of Inmarsat Global Area Network ("GAN") terminals.[32] The GAN system is the latest and fastest growing land mobile Inmarsat service. A similar service based on the same technology, called Fleet, is provided to maritime users. Therefore, the overload thresholds measured by NERA are appropriate for use in analyzing the actual interference effects that can be expected in land and maritime scenarios. The report from Honeywell addresses the appropriate overload threshold for aeronautical terminals.[33]

NERA concludes that an appropriate overload threshold is around –75 dBm, which is 15 dB lower than the threshold assumed by the Commission. Based on the existing RTCA and ARINC standards, Honeywell explains that (i) the overload threshold for aeronautical terminals is –72 dBm at 1 MHz frequency offset, and (ii) for offsets less than 1 MHz, no specifications currently exist but the overload level is actually lower. Using this –72 dBm value in the Commission's analysis yields a 12 dB link margin deficit instead of a 10 dB positive

---

31 Inmarsat has attached copies of the two manufacturer reports to this filing. To the extent necessary, Inmarsat requests that the Commission waive its 25-page limitation regarding petitions for reconsideration in order to consider the attached reports. *See* 47 C.F.R. § 1.429(d). Due to the complex technical aspects of the *Order*, a waiver would serve the public interest be allowing the meaningful consideration of the issues discussed in this petition. *See Implementation of the Local Competition Provisions in the Telecommunications Act of 1996 Interconnection between Local Exchange Carriers and Commercial Mobile Radio Service Providers*, Order, 11 FCC Rcd 11882 (1996).

32 *See* Exhibit A.

33 *See* Exhibit B.

margin.[34] Thus, there is no factual basis for the Commission's use of assumed –60 dBm or –50 dBm overload thresholds in its analysis.[35]

The lower overload thresholds demonstrated by these manufacturers affect the interference susceptibility of all Inmarsat terminals, regardless of whether they are operated near an airport, in a harbor, on a waterway or on land. Inmarsat requests the Commission to take these overload threshold limits into consideration and recalculate appropriate restrictions on the location of ATC base stations. Moreover, the Commission should establish an appropriate guardband to take into account the fact that the effect of overload is highly dependent on the frequency separation between the interfering carrier and the desired receive frequency.

II. TRANSPARENCY IS ESSENTIAL IN THE ATC AUTHORIZATION AND DEPLOYMENT PROCESS

The Commission has carefully crafted restrictions limiting the deployment of ATC in the L-Band based on its analysis of a specific set of assumed "baseline" ATC characteristics. The development and deployment of an ATC system in practice, however, will likely involve system architectures that the Commission did not anticipate during the course of this proceeding. The Commission recognizes as much when it indicates that the maximum number of permitted ATC base stations may need to be reduced in circumstances where an ATC applicant does not plan to use vocoders or use a GSM architecture. In fact, the very first ATC application to have been filed sought authority for an ATC system that was not consistent with

---

34 *See* Exhibit B at 2; *cf. Order* at App. C2, Table 2.2.3.2.A.

35 *See Order* at App. C2 § 1.12 (-50 dBm is assumed for aeronautical terminals and -60 dBm for mass-produced terrestrial receivers).

the "baseline" ATC system assumptions in the *Order,* and therefore sought a number of variances and modifications from those assumed parameters.[36]

As discussed above, the Commission's restrictions on ATC operations are vital to protect MSS operations from interference and to ensure the integrity of L-band MSS. These limits are based on a number of important assumptions about the architecture of the ATC network being deployed and the associated satellite system. The Commission spent over a year analyzing the interference impact of ATC operations that will result from an ATC system operating under the defined baseline assumptions described in the *Order*. For instance, the Commission has assumed that the system will include 18 dB of link margin to be used solely to overcome structural attenuation when the ATC mobile terminal is operating inside a building. If an ATC operator does not use this link margin solely for indoor operations to penetrate buildings and still seeks authority to operate 1725 simultaneous co-channel base stations, Inmarsat's MSS system could well suffer significant harmful interference.[37] The way that the structural attenuation link margin is intended to be used versus the way that it may actually be used in the field is but one example of how the assumptions upon which the Commission's conclusion that ATC should not cause interference could be undermined. Changes in other factors could have as great an impact on the potential interference caused by a proposed ATC system.

For these reasons, it is important that all ATC applications be placed on public notice so that interested parties will have an opportunity to examine the specific ATC architecture proposed and also comment on any variance or waiver from the Commission's baseline assumptions that is sought.

---

36 *See MSV ATC Application* at 5-7.

37 *See supra* at 7-9.

A. Public Notice And Comment Are Critical at the Application Phase

The Commission has solicited new applications by MSS operators, including MSV, to modify existing space station licenses for ATC authorization.[38] The Commission has indicated that applications that meet certain requirements, including the technical restrictions adopted in the *Order* and a certification that the terrestrial facilitates will be operated consistent with all international agreements, *will* be treated as minor modifications and that the Commission *may* provide public notice and opportunity for comment on such applications at its discretion.[39]

Any up-front assumption that an ATC application should be properly classified as a minor modification would be inconsistent with the requirements of the Communications Act and longstanding Commission practice in licensing satellite systems. The Commission's Part 25 rules provide, consistent with Section 309 of the Communications Act,[40] that major modifications to an existing satellite system license or to an application for a satellite system license will be placed on public notice.[41] In the context of amendments to such license applications, "[a]n amendment will be deemed to be a major amendment . . . [i]f the amendment increases the potential for interference, or changes the proposed frequencies or orbital locations to be used."[42] In comparison, a "minor" modification in a license or in an application is one that does not have the potential to increase interference.[43]

---

38 *See Order* at ¶ 240.

39 *See Id.*

40 *See* 47 U.S.C. § 309.

41 *See* 47 C.F.R. § 25.150(a)(3) and (4) ("At regular intervals, the Commission will issue public notices listing . . . (3) The receipt of applications for major modifications to station authorizations; (4)The receipt of major amendments to pending applications . . . .").

42 47 C.F.R. § 25.116(b).

43 *See, e.g., In the Matter of Streamlining the Commission's Rules and Regulations for Satellite Application and Licensing Procedures*, Notice of Proposed Rulemaking, IB

In this proceeding, the Commission appears to have determined that an ATC system that complies with all of the Commission's requirements and is designed in a manner that is consistent with the baseline ATC assumptions will not likely cause harmful interference into an MSS system. But until the Commission and interested parties have the opportunity to actually review a specific ATC application proposal, it simply is not possible to make a determination whether that specific ATC architecture actually will increase the potential for interference.

As described above, the precise manner in which an applicant proposes to implement its ATC system has a great impact on the interference potential. For example, although the Commission has limited the number of simultaneous co-channel uses in the L-Band to 1725, it has left open the opportunity for ATC operators to seek to deploy additional base stations on a case-by-case basis upon a suitable showing that there would be no increase in co-channel or adjacent channel interference to other MSS providers.[44] With respect to the L-band, the *Order* further requires an ATC operator to indicate whether affected parties to the Mexico City MOU agree to the proposed increased level of terrestrial operations. And, as explained above, the manner in which the 18 dB link margin intended for overcoming structural attenuation during indoor operations is actually implemented is extremely important as well.

The need for public notice and regulatory transparency in processing ATC applications is not a theoretical concern. On June 3rd, MSV filed an application seeking

---

Docket no. 95-117 at ¶ 23 (rel. Aug. 11, 1995); *see also Space Imaging LLC Application for Modification of Space Station Authorization*, Order and Authorization, 16 FCC Rcd 7088 at ¶ 9 (March 30, 2001) ("Because these minor changes merely reflect updated system parameters and do not increase the potential for interference from the IKONOS satellite, we grant the requested minor modification."); *Streamlining the Commission's Rules and Regulations for Satellite Application and Licensing Procedures*, Report and Order, 11 FCC Rcd 2158 at ¶ 33 (Dec. 16, 1996) ("Whether a modification is "major" or "minor" should depend on its potential to cause interference to other operators.").

44 *See Order* at ¶ 147.

authority for an ATC system. Although the Commission has returned that application as deficient,[45] that filing illustrates the likelihood that ATC license applicants will seek variances from the baseline ATC system contemplated by the Commission, may attempt to avoid obligations imposed by the *Order*, and may provide only a superficial description of the ATC network being proposed.

The MSV application proposed a number of radical departures from the assumed ATC baseline. For example, the MSV ATC Application sought authorization to deploy an ATC system with 6,900 co-channel base station carriers per channel – over 4,000 more carriers than permitted under the Commission's Rules.[46] Moreover, MSV filed its application without bothering to discuss the matter with Inmarsat and without fulfilling the requirement that MSV "indicate whether or not all affected parties to the 1996 Mexico City MOU agree to the proposed additional terrestrial operations."[47]

Another important aspect of an ATC application that would warrant public comment would be the use of CDMA technology (as opposed to GSM).[48] The Commission's analysis of L-Band interference issues is based specifically on the GSM-system proposed by MSV during the proceeding.[49] The implications of a non-GSM system are not clear and have not been adequately analyzed by the Commission or Inmarsat. While FCC notes that "[t]o the extent that an L-band MSS licensee is able to demonstrate that the use of a different system architecture

---

45 *See June 24th Letter*, *supra* note 10.

46 *See MSV ATC Application* at 14.

47 *See Order* at ¶ 147.

48 *See, e.g., MSV ATC Application* at 14 and Appendix F.

49 *See Order* at ¶ 140 ("Our analysis assumes that the ATC system is implemented as a TDMA GSM system.").

would produce no greater potential interference" an alternative system may be used,[50] nowhere in the *Order* are the interference implications of a non-GSM system even considered.

To the extent that an ATC applicant seeks any variances, potentially affected parties need the opportunity to fully analyze the request and determine the interference impact. For example, the limitations on ATC operations in the *Order* are based on the assumption that a voice service will be deployed. This is reflected in use of a voice activation factor and a vocoder factor in the Commission's analysis of the appropriate protections for MSS operators.[51] The Commission further requires the implementation of a "variable rate vocoder in the ATC mobile terminal" in its Rules.[52] To the extent that an ATC applicant seeks to provide a data service using ATC, the assumptions and limitations imposed by the Commission would need to the adjusted accordingly. Without a vocoder, an ATC operator may be less able to reduce interference and the number of permitted base stations per channel would need to be correspondingly decreased.

Thus, any application for an ATC system must be open to public notice and comment. Only with a thorough review of the proposed architecture and an opportunity for affected parties to evaluate the application will the Commission be able to fulfill its obligations under the Communications Act and its Rules, and obtain sufficient information in order to make a rational determination (i) whether the alternative system will likely cause harmful interference

---

50 *See Order* at App. B p. 150.

51 *See Order* at ¶ 138 ("any reduction in average transmit power of the ATC transmitters whether in power control, vocoder factor and voice activation factor would affect the interference power received at both satellites equally."); *see also id.* at ¶ 140 (the FCC analysis assumes that a vocoder is used to reduce potential interference).

52 *See Order* at App. B § 25.253(a)(2).

to other MSS operators and (ii) what appropriate modified limits (if any) should be applied in such a case.

In sum, because of the great potential for interference from ATC, Inmarsat urges the Commission presume that all ATC applications should be placed on public notice, including those that contain assumptions that are not reflected in the Commission analysis in the *Order* or that seek to modify, vary from, or waive, any of the restrictions or ATC service rules adopted in the *Order*.

B. Transparency Is Necessary During The Deployment And Operation Of ATC

Only after the actual deployment of an ATC system will the Commission and affected MSS operators know for sure whether ATC operations will cause harmful interference into MSS systems.

As Inmarsat has mentioned in the past, it has suffered terrestrial interference from various sources in its overseas operations in the past.[53] When this occurs, it often is difficult to determine the exact cause of the interference. To help address concerns about the deployment of a new and untested terrestrial service in the MSS bands, the Commission provides for a limited rollout of base stations for first 18 months of deployment, which may provide existing MSS service providers the chance to analyze the impact of ATC before full-scale ATC operations commence.[54]

In order for affected MSS operators to understand when this 18-month period starts and stops, Inmarsat requests that the Commission require ATC licensees to notify the Commission when they commence ATC operations, and that the Commission issue a Public

---

53 *See, e.g.,* Inmarsat Ex Parte Presentation to the Federal Communications Commission, IB Docket No. 01-185 at 28 (Feb. 21, 2002).

54 *See Order* at ¶ 143.

Notice regarding the start of the 18-month phase-in period of an ATC system. Otherwise, it will not be clear when this 18-month period starts and stops.

Moreover, to ensure that required ATC base station separation distances are maintained and that other ATC limits are complied with, it will be important to know where ATC base stations actually have been deployed and how many ATC mobile terminals actually have been commissioned. Inmarsat urges the Commission to require ATC licensees to keep complete records of the locations of their ATC base stations, and the number of ATC mobile terminals they have deployed, and to file that information, every six months, with the Commission so that potentially affected parties can be apprised of the scope of the ATC deployment. The Commission has imposed similar reporting obligations in other contexts to ensure that it is able to monitor the development of a new service.[55] Imposing such obligations in this context also will serve the purpose of identifying possible sources of ATC interference that may occur due to, among other things, improper base station siting or malfunctioning antennas.

As contemplated by the *Order*, Inmarsat requests that the Commission place on public notice any waiver requests made by an ATC operator after the deployment of its ATC operations.[56] A waiver or modification of an ATC system could result in interference to an MSS system that was not contemplated in the *Order*. Any such request therefore should be placed on notice and open to public comment.

---

55 *See Redesignation of the 17.7-19.7 GHz Frequency Band, Blanket Licensing of Satellite Earth Stations in the 17.7-20.2 GHz and 27.5-30.0 GHz Frequency Bands, and the Allocation of Additional Spectrum in the 17.3-17.8 GHz and 24.75-25.25 GHz Frequency Bands for Broadcast Satellite-Service Use*, Report and Order, 15 FCC Rcd 13430 at ¶ 15 and App. A at Section 25.145(g)(4) (June 22, 2000).

56 *See Order* at ¶ 147.

CONCLUSION

For the reasons set forth above, Inmarsat urges the Commission to clarify the *Order* and modify the ATC service rules as discussed herein.

Respectfully submitted,

/s/ Alexander D. Hoehn-Saric

Gary M. Epstein
John P. Janka
Alexander D. Hoehn-Saric
LATHAM & WATKINS LLP
555 11th Street, N.W.
Suite 1000
Washington, D.C. 20004
(202) 637-2200 (phone)
(202) 637-2201 (fax)

Counsel for INMARSAT VENTURES PLC

July 7, 2003

ENGINEERING INFORMATION CERTIFICATION

I hereby certify that I am the technically qualified person responsible for reviewing the engineering information contained in the foregoing submission, that I am familiar with Part 25 of the Commission's rules, and that it is complete and accurate to the best of my knowledge and belief.

/s/ Jonas Eneberg

Jonas Eneberg
Manager, Spectrum

INMARSAT LIMITED
99 City Road
London
EC1Y 1AX
United Kingdom

Dated: July 7, 2003

EXHIBIT A

1. PURPOSE

The purpose of the measurements is to determine the interference power level that causes harmful interference to a Nera Worldcommunicator GAN terminal at different frequency offsets. The tests are performed both with a single interfering GSM carrier and with two GSM carriers that generate an interfering intermodulation product.

2. ENVIRONMENTAL CONDITIONS

Normal ambient

3. TEST PROCEDURES

3.1 Test Equipment

- Rohde&Schwarz SMIQ 03B
- Marconi Instruments, Signal Generator 2031
- Noise/Com NC 6110 Noise Generator
- Hewlett-Packard 89441A Vector Analyzer for calibration
- Agilent 778D Dual Directional Couplers
- Signal generators:
  - Marconi Instruments, Signal Generator 2031
  - Rohde&Schwarz SMIQ 03B
- IBM compatible PC's (One for generating the known symbol sequence and another for the vtLite)
- Filters, attenuators, mixers, splitters and combiners

3.2 Test Set-Up

3.2.1 The GSM interference signal

GSM modulation is used. Below is the configuration of the GSM signal and Figure 3.2.1 shows the frequency spectrum of the signal.

Modulation type	GMSK
Symbol size	1 bit
Symbol rate	270.883333 ksps
Filter type/param	Gaussian/0.3
Data format	PN15

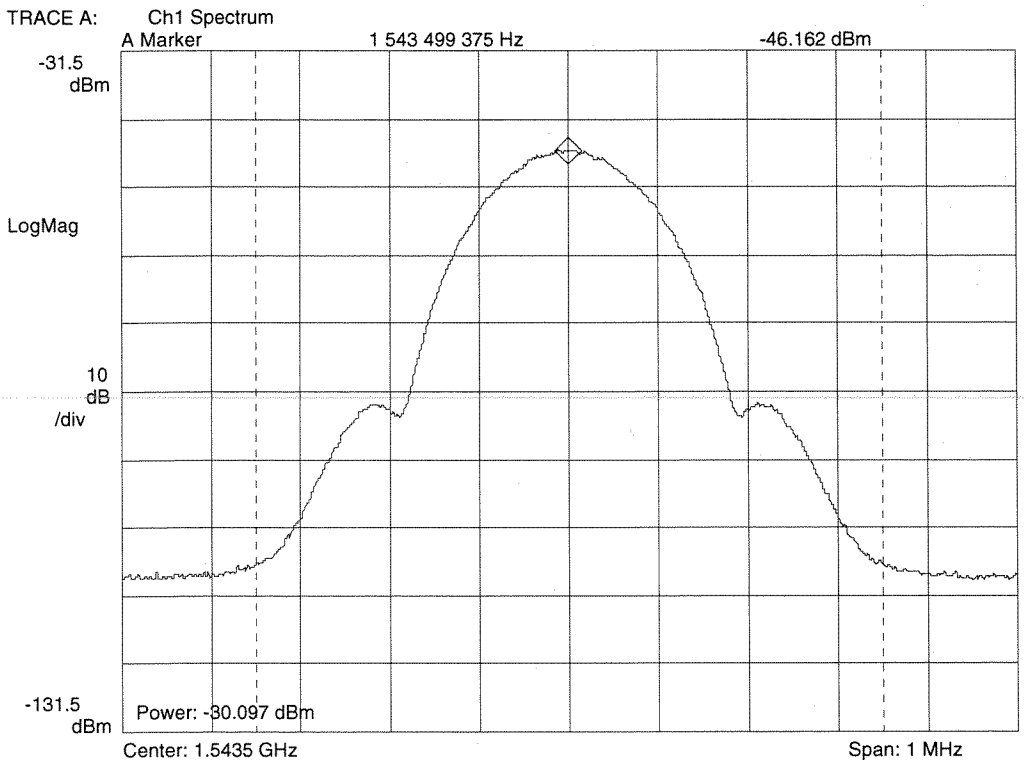

Figure 3.2.1. Transmitter spectrum of the GSM signal.

3.2.2 Only one GSM interferer channel

The test setup is shown in Figure 3.2.2. An SMIQ signal generator is used as a continuous 64kbit/s data SCPC transmitter at the receive channel. An IBM compatible PC feeds the SMIQ signal generator with the known symbol sequence.

In order to obtain the required C/No, White Gaussian Noise (WGN) and is added before the signal is applied to the antenna port of the receiving MES.
To calibrate the received signal to noise ratio into the MUB, a vector analyzer is used. The IF signal is drained using a Coupler.

To calibrate the "GSM" signal power into the RFB, a vector analyzer is used. The L band signal is drained using a Coupler.

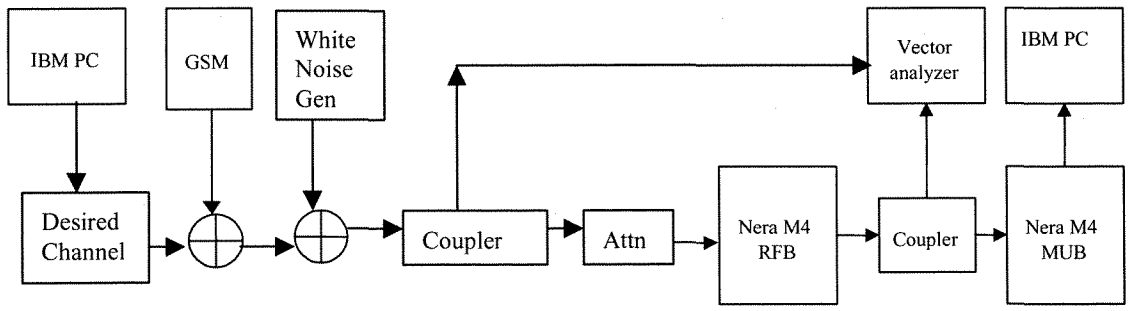

Figure 3.2.2. Block diagram of the test set-up for one GSM signal.

Test procedure:

1) The SMIQ is set up to transmit a continuous SCPC signal at the receive frequency, 1542.0 MHz. The data and SU fields of the transmitted frame consist of a known data pattern (all zeros) before scrambling and FEC-encoding.
2) The rx channel signal level is calibrated to 3dB above minimum (-63dBm input MUB). WGN is added. The SNR is calibrated to a C/No of 53.2 dBHz by means of the Vector analyser.
3) The receiving MES, which is tuned to the correct Rx-channel, is started. After sync is acquired, the MES starts to count the number of bits in error (the ones which differs from the known all-zeros pattern). Each time 60 new frames are received, the MES writes the accumulated number of bit errors to the PC. A program running on the PC writes the BER to the PC screen.
4) The GSM signal is set up at 1542.0 MHz with frequency offset from 0.15 to 14.0MHz. The power level is adjusted until bit errors start to occur, and the level is measured by the Vector analyzer.
5) Make the mesurement on both sides of the center frequency, 1542.0 MHz.

3.2.3 Intermodulation measurement with two interferers

The set up is the same as above, except instead of one GSM signal two unmodulated RF signals are used as shown in Figure 3.2.3.1. Two 20dB attenuators are added to each interferer channel to prevent intermodulation product of these two.

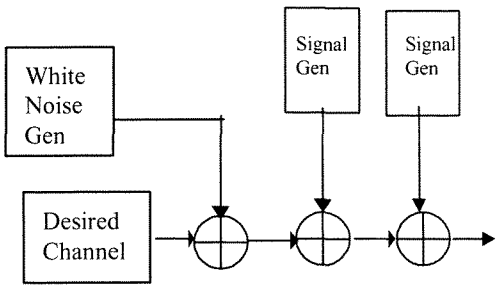

Figure 3.2.3.1 Interfering signals

Test procedure:

1. The test procedure is the same in step 1 to 3 as above.
2. The two interfering channels are configured with 2/4 MHz and 6/12MHz offset from the received frequency, 1542.0 MHz as shown in Figure 3.2.3.2. The power levels of both signal generators are adjusted until bit errors start to occur, and the total power level is measured by the Vector analyzer.
3. Make the mesurement on both sides of the center frequency, 1542.0 MHz

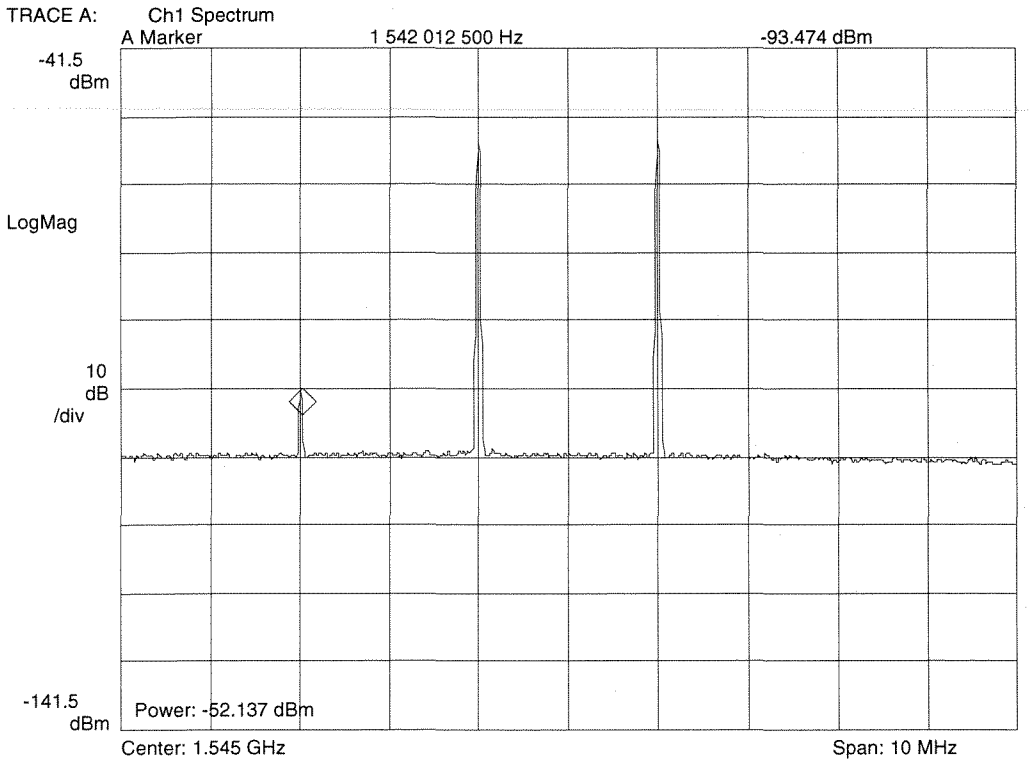

Figure 3.2.3.2 Interfering signals with the desired signal at 1542.0MHz

4. RESULTS

4.1 With one GSM carrier

Figure 4.1 shows the frequency offset on both sides of the center frequency, 1542.0 MHz versus power level in –dBm.

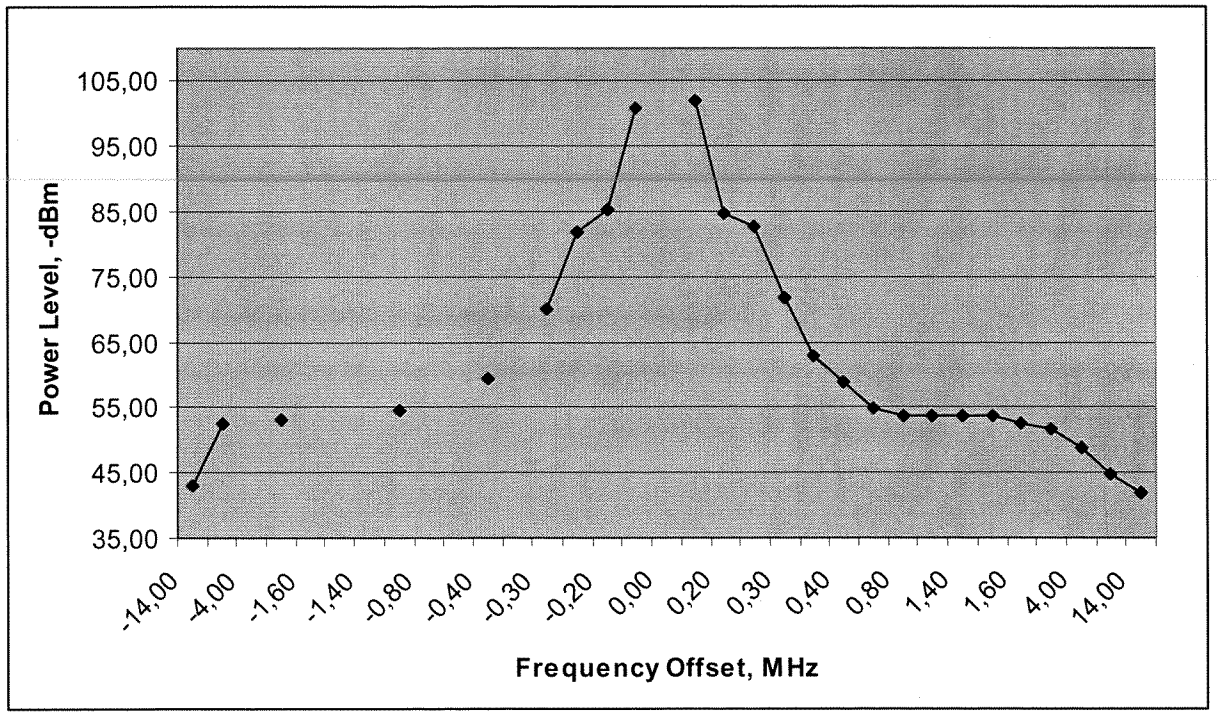

Figure 4.1 The frequency offset versus Power level

4.2 Intermodulation

The table below shows the harmful interference power level versus the pairs of frequencies of the two interferers .

Frequency Offset, MHz	Power Level, dBm
1538/1540	-74,1
1530/1536	-73,9
1544/1546	-72,6
1548/1554	-73,8

5. CONCLUSIONS

Intermodulation products generated by two GSM carriers cause harmful interference to the GAN terminal when the received interference power level is between –73 to –74 dBm. The same interference power level from a single GSM carrier causes harmful interference at an offset of around 300 kHz. It is concluded that to provide adequate protection from interference, the interference power should not be allowed to exceed these levels.

6. SIGNATURE

Signed [Engineer]:	Thomas Danglé	Date:	2003-07-04
Signed [Witness]:	Dag M. Larsen	Date:	2003-07-04
Location:	Billingstad, Norway		

EXHIBIT B

Honeywell

Aerospace Electronic Systems
Honeywell
Communications & Surveillance Technology CoE
7000 Columbia Gateway Drive
Columbia, MD 21046-2119
410.964.7000
410.964.7322 Fax

July 7, 2003

Mr. Rohan Hiesler
Aeronautical Engineer Manager
Inmarsat
99 City Road
London EC1Y 1AX
United Kingdom

Dear Rohan:

You have asked me to review Appendices C1 and C2 from the FCC Order 03-15 authorizing ATC as a supplement to MSS service, and to determine whether the FCC has accurately calculated the saturation levels of Inmarsat receivers. I understand that Inmarsat intends to submit this letter to the FCC in support of a request that the FCC modify some of its rules governing ATC.

In the referenced documents, the FCC has taken the saturation level of Inmarsat receivers to be -50 dBm. As explained below, this is incorrect and based on a misinterpretation of relevant ARINC, RTCA and ICAO specifications.

The FCC quotes RTCA as having a standard that such receivers have a saturation level at that level. FCC Appendix C2, Section 1.12. That quote is referenced to a Boeing Ex Parte Letter, in which Boeing states: "The saturation level of -80 dBW shown in table 6, however, is the level required for an equivalent Aircraft Earth-Station (AES) receiver at L-band pursuant to standards published by RTCA Inc." [Boeing April 5, 2002 Ex Parte Letter at 10] Note that -80 dBW is equal to -50 dBm.

The FCC Appendix C2, Section 1.12 does correctly interpret ARINC 741 regarding the LNA as having gain between 53 and 60 dB and a 1 dB compression point at the LNA output of +10 dBm. Working those numbers back to the LNA input does yield an input level of -50 dBm as the input level at which saturation of the LNA may occur. However, saturation of the LNA is not the limiting factor. Other stages or components of a SATCOM receiver down-stream from the LNA are susceptible to saturation at a lower level.

RTCA DO-210D, Section 2.2.4.1.3, states that the receiver must work at its normal sensitivity levels for P-channels and C-channels with interference that is more than 1 MHz off-channel at -72 dBm. Furthermore, DO-210D, Change 2, Section 2.1.9 says that the on-channel susceptibility level for CW is -163.2 dBm and for broadband it is -184.9 dBm/Hz in terms of spectral density.

Rather than using just the "saturation" level of the LNA, any calculation of saturation levels in Inmarsat receivers must consider the level of interference where the receiver itself may cease to function normally.

The FCC, in Appendix C2, Section 2.2.3.2, shows an analysis summarized in Table 2.2.3.2.A for a simulation model used by the FCC that considers aircraft at a stated altitude above the ground-based emitter and they came to the conclusion that the AES would have a 10 dB margin with respect to the -50 dBm saturation level. However, if the saturation level is -72 dBm per RTCA DO-210D, Section 2.2.4.1.3 for emissions that are more than 1 MHz removed from the active Inmarsat channel, then there is a 12 dB deficit rather than a 10 dB margin. If the separation between interference and the active channel is less than 1 MHz, the deficit for CW interference will decrease, and could be as large 113.2 dB for the co-channel case.

It appears that the ARINC LNA specification was incorrectly interpreted as the point at which Inmarsat SATCOM receivers would stop functioning. There is nothing in minimum operational performance standards of DO-210D that requires a receiver has to function normally with an interference level as high as -50 dBm. It appears, therefore, that the ARINC specifications for the LNA may have been confused with RTCA MOPS requirements. A conclusion that adequate protection of Inmarsat receivers from interference is achieved at -50 dBm is unsubstantiated based on the existing industry documents. As set forth above, a much more conservative protection level is warranted, taking into account all relevant ARINC, RTCA, and ICAO specifications.

Orville K. Nyhus, PhD

Ellsworth Byge, PhD for OKN 7/7/2005

Principal Fellow
Honeywell Aerospace Electronic Systems