The Full Service Network

Cox is a Facilities Based Provider

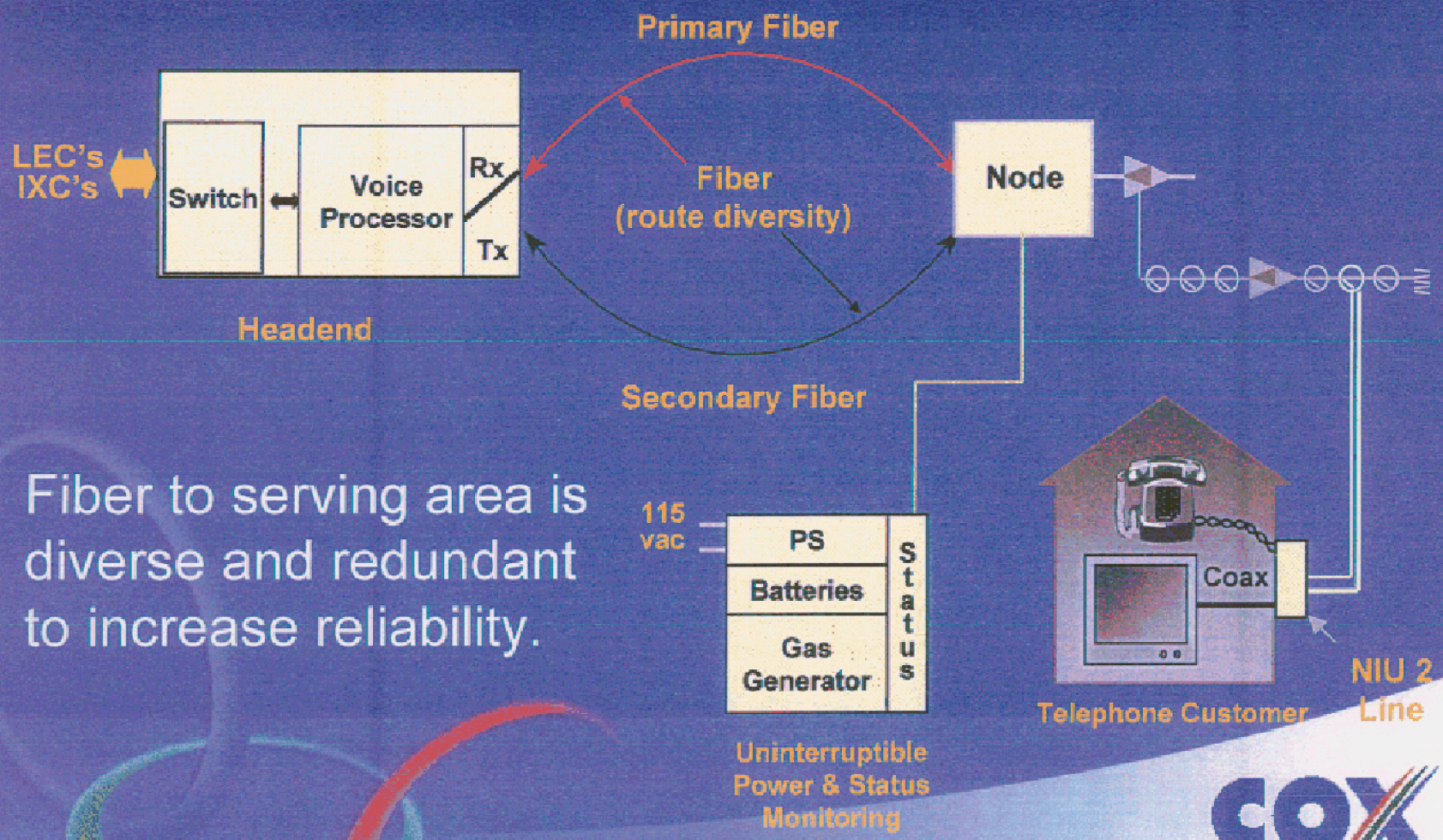

Fiber to serving area is diverse and redundant to increase reliability.

COX COMMUNICATIONS

The Full Service Network

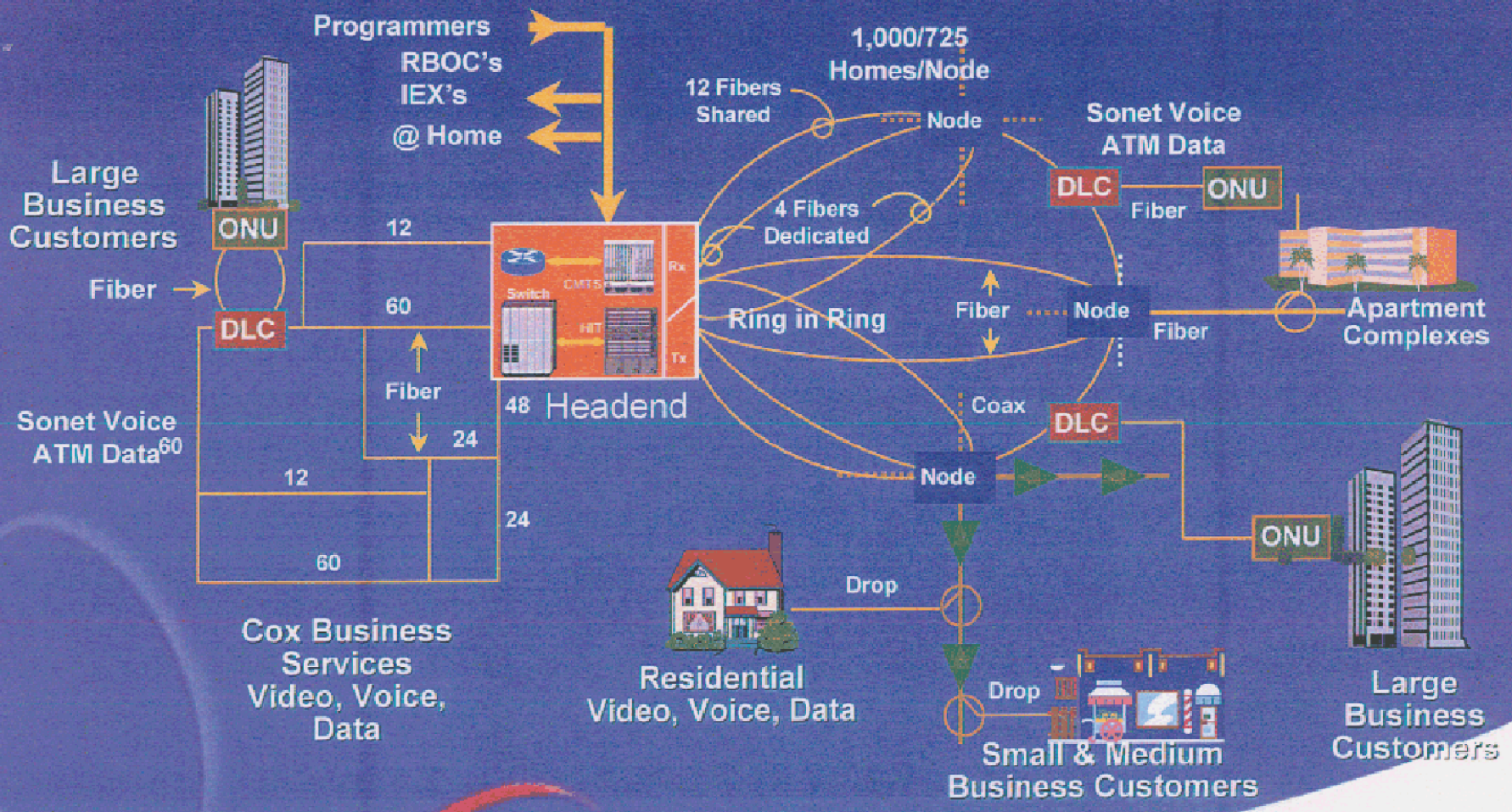

COX COMMUNICATIONS

Services Provided on the Full Service Network

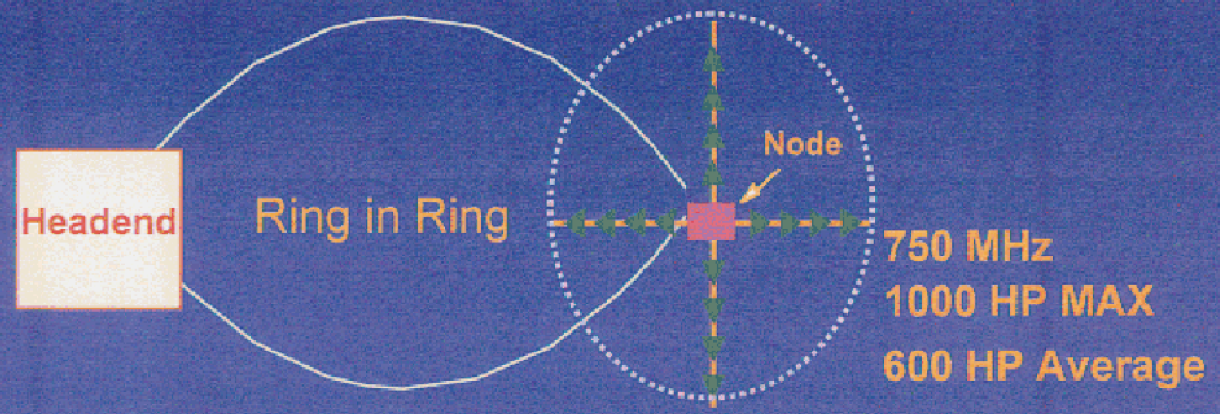

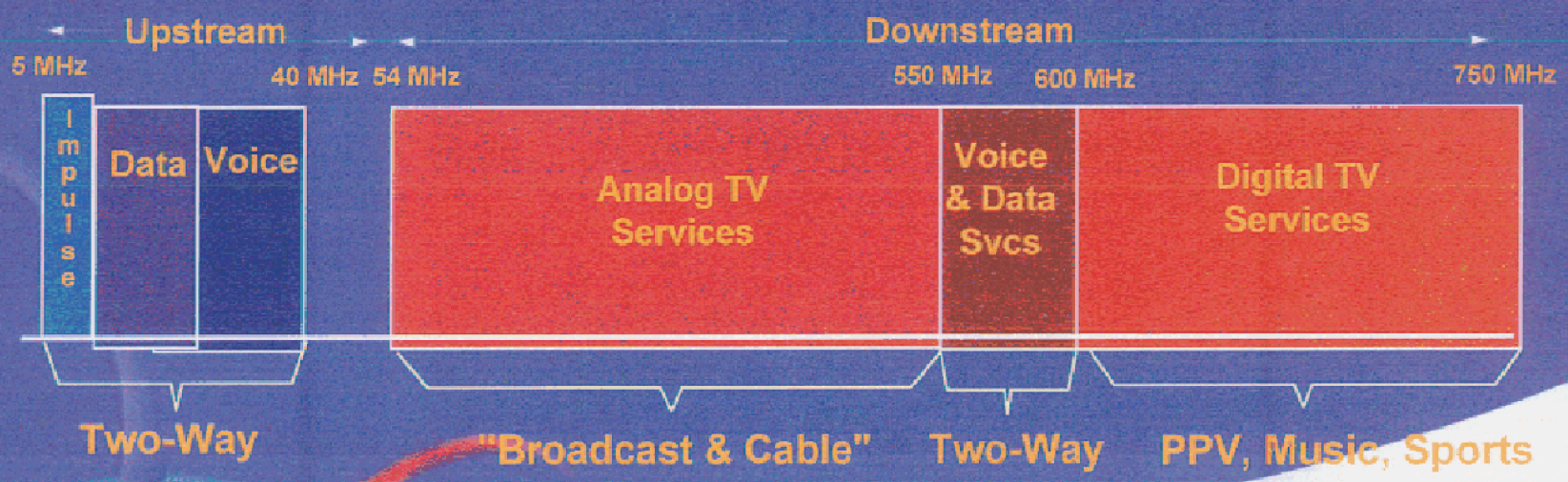

COX COMMUNICATIONS

Telephone Markets Today

Market	Phone Launch	% Phone Ready	2002 Penetration
Orange County/PV	Sept. '97	84%*	
Omaha	Dec. '97	100%	
New England	Mar. '98 (CT), Feb. '00 (RI)	100%	
San Diego	May 98	90%	
Phoenix	Dec. '98	52%	
Hampton Roads	Sept. '99	95%	
Oklahoma City	Jul. '99	86%	
New Orleans	Dec. '01	92%	
Total phone markets		**73%**	**18%**

COX COMMUNICATIONS

** Orange County alone (excluding Palos Verdes) is 94% phone ready*

Cox Digital Suite

3 PRODUCT BUNDLE

Video, Voice, Data

- Flexible Billing (one bill or customer choice)
- $10 Off of Cox High Speed Internet
- Preferred Pricing for Cox Digital Telephone

4 PRODUCT BUNDLE

Digital Video, Data and Voice with LD & Feature Package

- 2 Product Bundle benefits
- Customer can choose 1 of 5 incremental discounts

The Bundle – Our Competitive Edge

Video

DirecTV – Total Choice Plus Locals		Cox Digital Deluxe	
On two TV's	44.98 mo	(Digital on 1st, analog on all others)	
Dish Network top 150 plus locals		Including 22 local channels	44.44 mo*
On two TV's	51.97 mo	And 21 local FM channels	

Data

Pac Bell Basic DSL	49.95 mo^	Cox High Speed Internet	39.95 mo †^
Up to 1.5 mbps Downstream		Up to 3 mbps Downstream	
Up to 128 kbps Upstream		Up to 256 kbps Upstream	

Phone

Pac Bell Phone Service	44.28 mo	Cox Digital Telephone	26.88 mo
Two lines with voicemail		Two lines with voicemail	
And Basic Features Package		And Basic Features Package	

DirecTV	$139.21 mo	$111.27 mo
Dish Network	$146.20 mo	

CA. Example: *Customer chooses free item. ^Customer owns their modem. †Price reflects Jan 1, 2003 rate adjustment.

ILEC Competitors

SBC/Pacific Bell	Verizon	Cox
•First line $10.69/mo •Second line $10.69/mo •Includes unlimited local calling (zone 2) •Internal wiring maintenance $2.99/mo • Voice Mail $7.95/mo	•First line $17.25/mo •Second line $17.25/mo •Includes unlimited local calling (zone 2) •Internal wiring maintenance $.95/mo •Voice Mail $4.95/mo	•First line $9.99/mo •Second line $4.99/mo •Includes unlimited local calling (zone 3) •Internal wiring maintenance is included •Voice Mail $4.95/mo *Prices reflect 2 Product Bundle

COX COMMUNICATIONS

CLEC Competitors

MCI Neighborhood	AT&T Local	Cox
•First line $49.99/mo •Second line $18.99/mo •Includes 4 call features and Voice Mail •Includes unlimited in-state and state to state calls •Internal wiring maintenance $3/mo *Must make over $23/mo in LD to benefit from offer	•First line $19.95/mo •Second line $11.00/mo •Includes 3 call features •Includes unlimited local calling (and zone 3) •Internal wiring maintenance $2.99/mo •Voice Mail $6.95/mo	•First line $9.99/mo •Second line $4.99/mo •Active Lifestyle $6.95/mo includes 5 features •Includes unlimited local calling (zone 3) •Internal wiring maintenance is included •Voice Mail $4.95/mo *Prices reflect 2 Product Bundle

COX COMMUNICATIONS

Future Services

- Video enhancements
  - DVR
  - VOD/SVOD
  - HDTV
- Broadband enhancements
  - Cox.Net content
  - Value-added services (tiering, firewall, virus protection)
  - Home networking
- Phone enhancements
  - Feature development (privacy director, talking caller ID)
  - VoIP

COX COMMUNICATIONS

ATTACHMENT C

SUMMARY OF STATE REGULATION OF BELLSOUTH BROADBAND SERVICES

To date, three state public service commissions have ordered BellSouth to provide either its federally tariffed wholesale DSL transmission service and/or its retail FastAccess service over the UNE-P, while other state commissions have similar issues pending before them. Each of the three state commissions that have taken final action has issued a ruling that is inconsistent with the others. Thus, BellSouth is presently attempting to implement the unique requirements of each of these rulings, while seeking relief from such rulings in the courts.

For instance, the Kentucky Commission required that BellSouth provide only its wholesale DSL service over the UNE-P, while the Florida Commission has required that BellSouth provide only its retail Internet access service, BellSouth® FastAccess® ("FastAccess") over both an unbundled UNE loop (UNE-L) and the UNE-P, and the Louisiana Commission has required BellSouth to provide both the wholesale DSL and retail FastAccess services over the UNE-P.

The state commission rulings are also inconsistent regarding whether BellSouth must provide its wholesale or retail service to "new" customers that have already elected to receive voice service over CLEC leased facilities and the manner in which BellSouth may comply with this obligation.

To say the least, attempting to comply with inconsistent state-by-state regulation of BellSouth's federally tariffed, federally regulated services is a costly and time-consuming endeavor. Moreover, these rulings diminish BellSouth's incentive to invest in broadband facilities and to bring broadband capabilities to more customers.

These state commission decisions are contrary to and inconsistent with this Commission's determinations spanning the past several decades. BellSouth's broadband services are information services that the Commission has previously found to be interstate in nature and, although subject to federal regulation, has correctly determined it best not to regulate such services in order to encourage their development.[1] More recently, this Commission has expressly held on several occasions that companies such as BellSouth are not obligated to provide broadband services over CLEC leased facilities.[2]

---

[1] *See Computer II* at 432, ¶ 125 ("[W]e find that the enhanced services under consideration in this proceeding … fall within the subject matter jurisdiction of this Commission …."). "Experience gained from the competitive evolution of varied market applications of computer technology offered since the First Computer Inquiry compels us to conclude that the regulation of enhanced services is simply unwarranted. *Id.* at 433, ¶ 128.

[2] *E.g.*, *Louisiana/Georgia 271 Order*, ¶ 157 & n. 562; *Line Sharing Reconsideration Order*, 16 FCC Rcd at 2114, ¶ 26 (2001); *Texas 271 Order*, 15 FCC Rcd at 18517-18, ¶ 330 (2000).

The recent actions by the state commissions discussed herein conflict with the well settled principles of this Commission's previous decisions and have upset the regulatory certainty that has to date permitted companies to develop business strategies for investing in broadband services.

The following is a summary of each state commission proceeding concerning these issues:

A. The Proceedings of the Florida Public Service Commission.

The Florida Public Service Commission has conducted, and continues to conduct, proceedings concerning the terms and conditions under which BellSouth offers its wholesale and retail DSL services. A brief summary of each proceeding is provided below:

1. Docket No. 010098-TP, Order No. PSC-02-0765-FOF-TP (June 5, 2002) ("FDN Arbitration Order") (attached hereto as Exhibit "1"): The Florida Commission ordered BellSouth to *continue* to provide FastAccess to existing customers that subsequently choose another company to provide their voice service over unbundled loops. The Florida Commission found that it had authority to order this relief because BellSouth's policy affected the regulation of local telecommunications service, which was within its authority under Florida law. The Commission did not, however, articulate how BellSouth was required to continue providing this service. Accordingly, the parties submitted best and final proposals on implementing the ruling and, on March 21, 2003, the Commission ordered the following: (1) the ruling is limited to FastAccess service and does not apply to xDSL services such as the underlying transmission service; (2) the ruling is limited to the UNE-P; (3) any pricing discounts available to customers that purchase the bundle of services including Complete Choice® and FastAccess need not be made available to customers who receive FastAccess only; (4) BST can request payment via credit card but if a customer refuses, it is incumbent on the parties to find an alternative method of payment; (5) BST can discontinue FastAccess service if access to premises is denied to perform rewiring; (6) BST is permitted to contact CLEC customer to insure that FastAccess services is continued; and (7) BST is not relieved from its obligation to continue to provide FastAccess service if a second facility is not available.

In Docket No. 010098-TP, Order No. PSC-02-1453-FOF-TP (Oct. 21, 2002) (*FDN Clarification Order*) (attached hereto as Exhibit "2"), the Florida Commission clarified its previously rendered *FDN Arbitration Order* to limit the application of the ruling only to BellSouth end users that subsequently changed voice providers -- BellSouth must *continue* to provide FastAccess. In other words, the FDN Arbitration Order did not require BellSouth to establish new FastAccess service over an existing unbundled loop.

In Docket No. 010098-TP, Order No. PSC-03-0395-FOF-TP (March 21, 2003) (attached hereto as Exhibit "3"), the Florida Commission adopted best and final language in the FDN/BellSouth interconnection agreement, clarifying that BellSouth is obligated to

provide FastAccess only, and is not required to provide any and all DSL service (parties have agreed to separate standalone loop provisioning process).

On June 9, 2003, the Commission approved the parties' amendment to the interconnection agreement that incorporates the March 21, 2003 ruling.

2. Docket No. 001305-TP, Order No. PSC-02-0878-FOF-TP (July 1, 2002) (*Supra Reconsideration Order*) (attached hereto as Exhibit "4"): The Florida Commission, *sua sponte*, ordered BellSouth to *continue* to provide FastAccess over the UNE-P when BellSouth is no longer the voice provider in deciding parties' motions for reconsideration pursuant to its decision in the FDN arbitration decision (See *supra* No. 1). The Florida Commission relied upon the same rationale as it applied in the FDN Order to justify its decision. Supra and BellSouth have implemented the *Supra Reconsideration Order* in a new interconnection agreement, which states: "Where a BST voice customer who is subscribing to FastAccess Internet service converts its voice service to Supra utilizing a UNE-P line, BST will continue to provide Fast Access service to that end user." BellSouth has appealed the *Supra Reconsideration Order* to the United States District Court for the Northern District of Florida, Civil Action No. 4:02-CV-325-SM. The parties have submitted briefs, and the court has heard oral argument.

Docket No. 021249-TP, pending, involves the Florida Commission's consideration of a complaint filed by Supra against BellSouth concerning how BellSouth has implemented the stand alone loop method to continue providing FastAccess to UNE-P customers.

3. Docket No. 020507-TP, pending, involves the Florida Commission's consideration of a complaint filed by the FCCA (Florida Competitive Carriers Association), seeking, in part, to extend the Florida Commission's prior rulings to require BellSouth to provide FastAccess to customers who were not receiving such service when they obtained voice service from a CLEC, but subsequently requested it. The FCCA complaint also seeks to extend the application of the FDN and Supra rulings to all competitive carriers. The Florida Commission has scheduled a hearing on this complaint in July of 2003. The FCCA is no longer a party, and this proceeding is now a complaint with MCI, AT&T, ITC^DeltaCom, and Access Integrated.

B. The Proceedings of the Kentucky Public Service Commission.

Within the context of a Section 252 arbitration proceeding between BellSouth and Cinergy Communications Company, the Kentucky Public Service Commission ordered BellSouth to provide its wholesale DSL service to customers such as Internet Service Providers who wished to serve CLEC voice customers utilizing unbundled loops and the UNE-P at the same rate charged to those providing such services to BellSouth's voice customers. The Kentucky Commission did not, however, require BellSouth to provide its retail FastAccess service over the UNE-P or UNE-L. See Order attached as Exhibit "5". BellSouth has appealed this decision.

C. The Proceedings of the Louisiana Public Service Commission.

In Louisiana Public Service Commission Docket U-22252-E, *In re: BellSouth's Section 271 Pre-application*, the Louisiana Commission Staff issued a Final Recommendation on August 31, 2001 that provided, in part, the following:

> That the Commission order BellSouth to provide its ADSL service to end users over the high frequency portion of the same loop being used by a CLEC to provide voice service under the same terms and conditions that BellSouth offers the high frequency portion of its loops in line sharing arrangements. Staff further recommends that the CLEC shall be prevented from charging BellSouth for use of its UNE loop. Any issues regarding implementation of this recommendation shall be referred to the regional line sharing/line splitting collaborative for review and resolution.

Subsequently, the Louisiana Commission opened a rulemaking proceeding, Docket R-26173, to "further study the issue of whether BellSouth Telecommunication, Inc. should be required to provide its ADSL service to end users over the high frequency portion of the same loop being used by a CLEC to provide voice services."

On April 4, 2003, the Louisiana Commission issued "Clarification Order R-26173-A," requiring BellSouth to continue to provide its wholesale DSL services and its retail FastAccess services to customers that elect to change their voice service to a competitive carrier utilizing the UNE-P. A copy of Clarified Order R-26173-A is attached hereto as Exhibit "6." BellSouth has appealed this decision.

There are ongoing proceedings before the Louisiana Commission concerning other aspects of its order, including the extent of BellSouth's ability to price its broadband services depending upon the overall package of services purchased by the customer.

D. The Proceedings of the Georgia Public Service Commission.

On April 29, 2002, MCImetro Access Transmission Services, LLC and MCI WorldCom Communications, Inc. (collectively, "WorldCom") filed a complaint before the Georgia Commission, demanding that the Georgia Commission "Order BellSouth to discontinue its unlawful policy of refusing to provide FastAccess service to MCI voice customers over the high frequency portion of their voice lines" and "to permit [WorldCom] to provide UNE-P voice service over the same lines BellSouth uses to provide FastAccess service." *See* WorldCom Complaint, attached hereto as Exhibit "7," p. 8. The Georgia Commission held an evidentiary hearing concerning WorldCom's complaint on February 11 & 12, 2003 and post-hearing briefs have been filed.

E. The Petition for Section 252 Arbitration filed by ITC^DeltaCom.

ITC^DeltaCom has filed a petition for Section 252 arbitration of certain unresolved interconnection disputes before the Mississippi and Alabama Public Service Commissions, as well as the Tennessee Regulatory Authority that requests arbitration of the following issue: "Should BellSouth continue providing the end user ADSL service where ITC^DeltaCom provides UNE-P local service to that same end user on the same line?" Attached hereto as Exhibit "8" are copies of the relevant pages of the DeltaCom arbitration petition.

EXHIBIT "1"

BEFORE THE FLORIDA PUBLIC SERVICE COMMISSION

In re: Petition by Florida Digital Network, Inc. for arbitration of certain terms and conditions of proposed interconnection and resale agreement with BellSouth Telecommunications, Inc. under the Telecommunications Act of 1996.	DOCKET NO. 010098-TP ORDER NO. PSC-02-0765-FOF-TP ISSUED: June 5, 2002

The following Commissioners participated in the disposition of this matter:

LILA A. JABER, Chairman
J. TERRY DEASON
MICHAEL A. PALECKI

APPEARANCES:

MATTHEW J. FEIL, ESQUIRE, 390 North Orange Avenue, Suite 2000, Orlando, Florida 32801-1640, and MICHAEL C. SLOAN, ESQUIRE, Swidler, Berlin, Shereff, & Friedman, LLP, 3000 K Street, Northwest, Suite 300, Washington, District of Columbia
On behalf of Florida Digital Network, Inc.

NANCY B. WHITE, ESQUIRE and PATRICK W. TURNER, ESQUIRE, c/o Nancy H. Sims, 150 South Monroe Street, Suite 400, Tallahassee, Florida 32301-1556
On behalf of BellSouth Telecommunications, Inc.

FELICIA R. BANKS, ESQUIRE and JASON FUDGE, ESQUIRE, Florida Public Service Commission, 2540 Shumard Oak Boulevard, Tallahassee, Florida 32399-0850
On behalf of the Commission.

FINAL ORDER ON ARBITRATION

BY THE COMMISSION:

TABLE OF CONTENTS

I. CASE BACKGROUND 3

II. JURISDICTION 4

III. BELLSOUTH DSL OVER FDN VOICE LOOPS 4

IV. BROADBAND UNE LOOP 11

V. RESALE 18

I. CASE BACKGROUND

Pursuant to Section 252 of the Telecommunications Act of 1996 (Act), Florida Digital Network, Inc. (FDN) petitioned for arbitration with BellSouth Telecommunications, Inc. (BellSouth) on January 24, 2001. On February 19, 2001, BellSouth filed its Response to FDN's petition for arbitration. On April 9, 2001, FDN filed a Motion to Amend Arbitration Petition. On April 16, 2001, BellSouth filed its Response In Opposition to the Motion. FDN filed its Reply to BellSouth's Opposition to Motion to Amend Arbitration Petition on April 30, 2001. On May 22, 2001, Order No. PSC-01-1168-PCO-TP was issued granting FDN's Motion to Amend Arbitration Petition.

At the issue identification meeting, the parties identified ten issues to be arbitrated. Prior to the administrative hearing, the parties resolved all of those issues except one. An administrative hearing was held on August 15, 2001. On September 26, 2001, FDN filed a Motion to Supplement Record of Proceeding. BellSouth filed a timely opposition to FDN's motion on October 3, 2001. On December 6, 2001, Order No. PSC-01-2351-PCO-TP was issued denying FDN's Motion to Supplement Record of Proceeding.

Although the parties were not able to reach a complete settlement, we commend the good faith efforts of the parties to continue the negotiation process throughout this proceeding.

In this arbitration, FDN requests that this Commission order BellSouth to (1) end the practice of insisting that consumers who buy BellSouth's Digital Subscriber Line (DSL) service also purchase BellSouth voice; (2) unbundle the packet switching functionality of the Digital Subscriber Line Access Multiplexers (DSLAMs) that BellSouth has deployed in remote terminal facilities throughout its network and offer a broadband unbundled network element (UNE) consisting of the entire transmission facility from the customer's premises to the central office; and (3) permit the resale of the DSL transmission services that BellSouth provides to Florida consumers at retail. This Order addresses these requests.

II. JURISDICTION

Pursuant to Chapter 364, Florida Statutes, and Section 252 of Act, we have jurisdiction to arbitrate interconnection agreements, and may implement the processes and procedures necessary to do so in accordance with Section 120.80 (13)(d), Florida Statutes.

III. BELLSOUTH DSL OVER FDN VOICE LOOPS

We have been asked to decide whether BellSouth should be required to continue to provide its FastAccess Internet Service when its customer changes to another voice telecommunications provider. FDN seeks relief from what it claims to be BellSouth's "anticompetitive practice of leveraging its control of the DSL market in Florida to injure competitors in the voice market." FDN witness Gallagher explains that when customers of BellSouth's voice and FastAccess Internet Service seek to switch their voice service to FDN, BellSouth will disconnect their FastAccess Internet Service. He states that because FDN is unable to offer DSL and voice service over the same telephone line in most cases, customers are likely to lose interest in obtaining voice services from FDN.

BellSouth witness Ruscilli confirms that BellSouth will not offer its FastAccess Internet Service to a voice customer of another carrier. Witness Ruscilli explains that the only way a voice customer of FDN could obtain or maintain BellSouth's FastAccess Internet Service would be for FDN to convert that customer from facilities-based service to a resale service, in which FDN would resell BellSouth's voice service to that customer. BellSouth witness Williams states that in the situation in which FDN resells BellSouth's voice service, BellSouth would still be considered the voice provider, and therefore, BellSouth would continue to provide FastAccess Internet Service to that customer.

Witness Williams contends that in any event BellSouth is not required to provide DSL service over a loop if BellSouth is not providing voice service over that loop. In support of this position, he cites the FCC's *Line Sharing Reconsideration Order*,[1] which states in ¶16:

---

[1] In the Matters of Deployment of Wireline Services Offering Advanced Telecommunications Capability, Order No. FCC 01-26; 16 FCC Rcd 2101 (2001).

> We deny, however, AT&T's request that the Commission clarify that incumbent LECs must continue to provide xDSL service in the event customers choose to obtain service from a competing carrier on the same line because we find that the *Line Sharing Order* contained no such requirement.

Witness Williams states that "the FCC then expressly stated that its *Line Sharing Order* 'does not require that [LECs] provide xDSL service when they are no longer the voice provider'."

Witness Williams also suggests several "business reasons" for BellSouth's decision not to offer DSL over FDN voice loops. First, witness Williams states that the systems BellSouth uses to provide DSL service do not currently accommodate providing DSL service over an ALEC's UNE loop. He states that prior to provisioning DSL service over a given loop, BellSouth must determine whether that loop is DSL capable. He explains:

> In order to make this determination, BellSouth has developed a database that stores loop information for inventoried working telephone numbers. When an ALEC like FDN provides dial tone from its own switch, the ALEC (not the end user) is BellSouth's customer of record, and the ALEC (not BellSouth) assigns a telephone number to the end user. BellSouth's database, therefore, does not include loop information for facilities-based UNE telephone numbers, and BellSouth cannot use the database to readily determine whether a facilities-based UNE loop is ADSL compatible.

Witness Williams states that BellSouth's troubleshooting, loop provisioning, and loop qualification systems would not contain telephone numbers assigned by ALECs. Therefore, he contends that these mechanized systems do not support the provisioning of DSL service over a UNE loop that an ALEC such as FDN uses to provide voice service. In addition, witness Williams argues that it would be "quite costly to try to take telephone numbers that are not resident in our system today and to put those into those multiple databases."

Further, witness Williams states that processing DSL orders from an end user served by a facilities-based ALEC would be inefficient and costly. He explains that since the ALEC has access to all the features and functionalities of a UNE loop it purchases

from BellSouth, for BellSouth to provision DSL it must negotiate with each ALEC for use of the high frequency portion of these loops.

FDN witness Gallagher responds that BellSouth's "business reasons" for not providing DSL over ALEC UNE loops are not adequate grounds for denying FDN's request. He contends that when the Telecommunications Act of 1996 was adopted, "the ILECs did not have in place many of the systems that would ultimately be necessary to support the UNEs, interconnection, collocation and resale requirements of the new Act." Witness Gallagher argues that these systems were developed in response to the Act's requirements and the development of these support systems should continue to be driven by regulatory decisions and applicable law, not the other way around.

Witness Gallagher contends that BellSouth can offer no reasonable justification for its policy of not providing DSL over ALEC UNE loops. He states that this practice is apparently designed to leverage its market power in the DSL market as an anticompetitive tool to injure its competitors in the voice market. Witness Gallagher argues that with numerous competitive DSL providers folding or downsizing, if FDN does not obtain the relief it seeks in this proceeding, there is a very real possibility that BellSouth will eventually be the only DSL provider in its incumbent region in Florida. He states:

> Therefore, BellSouth's ability to exert unreasonable and unlawful anticompetitive pressures on the voice services market will continue to increase. For these reasons, BellSouth's refusal to offer xDSL service to Florida consumers who purchase facilities-based voice service from [ALECs] is unreasonable and unlawful.

In its brief, FDN argues that in the *Line Sharing Reconsideration Order* "the FCC did not find that ILECs may lawfully refuse to provide DSL service on lines on which it is not the retail voice carrier." FDN contends that the FCC simply determined that AT&T's request was beyond the scope of a reconsideration order, which was limited to consideration of the ILEC's obligation to provide line sharing as a UNE.

In addition, FDN contends that the Line Sharing Order[2] did not address, as a substantive matter, retail issues. FDN argues that

---

[2] In the Matters of Deployment of Wireline Services Offering Advanced Telecommunications

"BellSouth cannot cite the *Line Sharing Orders* as a basis for evading its *retail* obligations. FDN UNE voice customers who wish to buy FastAccess DSL *at retail* should be permitted to do so." (emphasis in original)

We note that the *Line Sharing Order* provided that:

> In this Order we adopt measures to promote the availability of competitive broadband xDSL-based services, especially to residential and small business customers. We amend our unbundling rules to require incumbent LECs to provide unbundled access to a new network element, the high frequency portion of the local loop. This will enable competitive LECs to compete with incumbent LECs to provide to consumers xDSL based services through telephony lines that the competitive LECs can share with incumbent LECs.

Line Sharing Order at ¶4.

The *Line Sharing Order* also provided that a state commission may impose additional line sharing requirements. The FCC states:

> It is impossible to predict every deployment scenario or the difficulties that might arise in the provision of the high frequency loop spectrum network element. States may take action to promote our overarching policies, where it is consistent with the rules established in this proceeding.

Order at ¶225. The FCC further emphasized that "States may, at their discretion, impose additional or modified requirements for access to this unbundled network element, consistent with our national policy framework." *Line Sharing Order*, 14 FCC Rcd at 20917.

Capability, Order No. FCC 99-355; 14 FCC Rcd 20912 (1999), *remanded and vacated* line sharing rule requirement, United States Telecom Association v. FCC, No. 00-1012, Consolidated with 01-1075, 01-1102, 01-1103, No. 1015, consolidated with 00-1025, 2002 WL 1040574 (D.C. Cir. May 24, 2002).

Recently, the *Line Sharing Order* was vacated by the U.S. Court of Appeals for the D.C. Circuit. We note that the Court addressed the FCC's unbundling analysis and concluded that nothing in the Act appears to support the FCC's decision to require unbundling of the high frequency portion of the loop "under conditions where it had no reason to think doing so would bring on a significant enhancement of competition." United States Telecom Association v. FCC, No. 00-1012, Consolidated with 01-1075, 01-1102, 01-1103, No. 1015, consolidated with 00-1025, 2002 WL 1040574 (D.C. Cir. May 24, 2002). We note that we have not relied upon the *Line Sharing Order* for our decision set forth herein.

BellSouth witness Ruscilli contends that BellSouth's FastAccess Internet Service is an "enhanced, nonregulated, nontelecommunications Internet access service." We agree.[3] However, we believe FDN has raised valid concerns regarding possible barriers to competition in the local telecommunications voice market that could result from BellSouth's practice of disconnecting customers' FastAccess Internet Service when they switch to FDN voice service. That is an area over which we do have regulatory authority.

We are troubled by FDN's assertions that BellSouth uses its ability to provide its FastAccess Internet Service as leverage to retain voice customers, creating a disincentive for customers to obtain competitive voice service. In its brief, FDN suggests that this practice amounts to unreasonable denial of service pursuant to Section 201 of the Act and Section 364.03(1), Florida Statutes. In addition, FDN contends that this practice unreasonably discriminates among customers, citing Section 202(a) of the Act and Sections 364.08(1) and 364.10(1), Florida Statutes. FDN also asserts that BellSouth's requirement that an end user seeking to purchase its FastAccess Internet Service must also purchase BellSouth's voice service is an anticompetitive and illegal tying arrangement, and "a *per se* violation of the antitrust laws." We believe that FDN has demonstrated that this practice raises a competitive barrier in the voice market for carriers that are unable to provide DSL service.

---

[3] See In the Matter of Amendment of Section 64.702 of the Commission's Rules and Regulations, (Computer II Final Decision); 77 FCC 2d 384 (1980).

As set forth in Section 706 of the Telecommunications Act, Congress has clearly directed the state commissions, as well as the FCC, to encourage deployment of advanced telecommunications capability by using, among other things, "measures that promote competition in the local telecommunications market, or other regulating methods that remove barriers to infrastructure investment."

Furthermore, our state statutes provide that we must encourage competition in the local exchange market and remove barriers to entry. As set forth in Section 364.01(4)(g), Florida Statutes, which provides, in part, that the Commission shall, "[e]nsure that all providers of telecommunications services are treated fairly, by preventing anticompetitive behavior. . .," we are authorized to address behaviors and practices that erect barriers to competition in the local exchange market. Section 364.01(4)(d), Florida Statutes, also provides, in part, that we are to promote competition. We also note that under Section 364.01(4)(b), Florida Statutes, our purpose in promoting competition is to "ensure the availability of the widest possible range of consumer choice in the provision of all telecommunications services." Thus, the Legislature's mandate to this Commission is clear.

As referenced above, FDN states that BellSouth's practice of disconnecting its FastAccess Internet Service when its customer changes to another voice provider unreasonably discriminates among customers, citing Section 202(a) of the Act, as well as Sections 364.08 and 364.10, Florida Statutes. Although it does not appear that Section 364.08, Florida Statutes, is directly on point, we agree that Section 202(a) of the Act and Section 364.10, Florida Statutes, are applicable. Section 364.10(1), Florida Statutes, provides that:

> A telecommunications company may not make or give any undue or unreasonable preference or advantage to any person or locality or subject any particular person or locality to any undue or unreasonable prejudice or disadvantage in any respect whatsoever.

Similarly, Section 202 of the Act, among other things, precludes a common carrier from making any unjust or unreasonable discrimination in practices or services, directly or indirectly. BellSouth's practice of disconnecting its FastAccess service unduly prejudices or penalizes those customers who switch their voice service, as well as their new carrier. The FCC's *Line Sharing*

Reconsideration Order is distinguishable here, because in this case BellSouth's practice of disconnecting its FastAccess Internet service has a direct, harmful impact on the competitive provision of local telecommunications service.

We also note that Section 251(d)(3) of the Telecommunications Act provides that the FCC shall not preclude:

> the enforcement of any regulation, order, or policy of a State commission that-
>
> (A) establishes access and interconnection obligations of local carriers;
>
> (B) is consistent with the requirements of this section [251];
>
> (C) does not substantially prevent implementation of the requirements of this section and the purposes of this part.

Thus, in the interest of promoting competition in accordance with state and federal law, BellSouth shall continue to provide FastAccess even when BellSouth is no longer the voice provider because the underlying purpose of such a requirement is to encourage competition in the local exchange telecommunications market, which is consistent with Section 251 of the Act and with Chapter 364, Florida Statutes.

It is incumbent upon us to promote competition. The evidence shows that BellSouth routinely disconnects its FastAccess service when a customer changes its voice provider to FDN, which reduces customers' options for local telecommunications service. The evidence also indicates that this practice is the result of a business decision made by BellSouth. Moreover, BellSouth has declined to eliminate this practice, contending that it would result in increased costs and decreased efficiency. The record does not, however, reflect that BellSouth cannot provision its FastAccess service over an FDN voice loop or that doing so would be unduly burdensome. As such, we find that this practice unreasonably penalizes customers who desire to have access to voice service from FDN and DSL service from BellSouth. Thus, this practice is in contravention of Section 364.10, Florida Statutes, and Section 202 of the Act. Furthermore, because we find that this practice creates a barrier to competition in the local telecommunications market in that customers could be dissuaded by this practice from choosing FDN or another ALEC as their voice

service provider, this practice is also in violation of Section 364.01(4), Florida Statutes.

Conclusion

This is a case of first impression and we caution that this decision should not be construed as an attempt by this Commission to exercise jurisdiction over the regulation of DSL service, but as an exercise of our jurisdiction to promote competition in the local voice market. Pursuant to Sections 364.01(4)(b), (4)(d), (4)(g), and 364.10, Florida Statutes, as well as Sections 202 and 706 of the Act, we find that for the purposes of the new interconnection agreement, BellSouth shall continue to provide its FastAccess Internet Service to end users who obtain voice service from FDN over UNE loops.

IV. BROADBAND UNE LOOP

We have also been asked to decide whether BellSouth should be required to offer an unbundled broadband loop as a UNE to FDN. The point of controversy centers around the fact that FDN's proposed broadband loop would include the packet switching functionality of the DSLAM located in the remote terminal. BellSouth witness Williams argues that "FDN's proposed new broadband UNE is not recognized by the FCC, nor the industry, and includes functionality which the FCC and this Commission have been very clear in their intent not to require ILECs to provide on a UNE basis."

BellSouth witness Ruscilli cites the FCC's 1999 *UNE Remand Order*,[4] in which the FCC stated that "[t]he packet switching network element includes the necessary electronics (e.g., routers and DSLAMs)." *UNE Remand Order* at ¶304 He asserts that the "FCC then expressly stated 'we decline at this time to unbundle the packet switching functionality, except in limited circumstances'." (Emphasis added by witness) *UNE Remand Order* at ¶306 The "limited circumstances" in which ILECs are required by the FCC to unbundle packet switching are contained in 47 C.F.R. Section 51.319 (Rule 51.319). Rule 51.319(c)(5) states:

[4] Implementation of the Local Competition Provisions in the Telecommunications Act of 1996, Third Report and Order, Order No. FCC 99-238; 15 FCC Rcd 3696 (1999), *remanded*, United States Telecom Association v. FCC, No. 00-1012, Consolidated with 01-1075, 01-1102, 01-1103, No. 1015, consolidated with 00-1025, 2002 WL 1040574 (D.C. Cir. May 24, 2002).