Jeffry Brueggeman
General Attorney

SBC Telecommunications, Inc.
1401 I Street, N.W., Suite 400
Washington D.C 20005
Phone: (202) 326-8895
Fax: (202) 408-8745

July 31, 2003

VIA ELECTRONIC SUBMISSION

Ms. Marlene H. Dortch
Secretary
Office of the Secretary
Federal Communications Commission
445 12th Street, SW
Washington, DC 20554

Re: **Notice of Written Ex Parte Presentation**
CC Docket Nos. 02-33; 01-337;95-20; 98-10; CS Docket No. 02-52; GN Docket No. 00-185

Dear Ms. Dortch:

Pursuant to Section 1.1206(b) of the Commission's rules, attached please find an ex parte letter and attachment for inclusion in the public record in the above-captioned proceedings.

Should you have any questions, please contact me.

Sincerely,

/s/ Jeffry Brueggeman

Jeffry Brueggeman
General Attorney

SBC Telecommunications, Inc.
1401 I Street, N.W., Suite 400
Washington D.C 20005
Phone: (202) 326-8895
Fax: (202) 408-8745

VIA ELECTRONIC SUBMISSION

July 31, 2003

Ms. Marlene H. Dortch
Secretary
Federal Communications Commission
445 12th Street N.W.
Washington, D. C. 20554

Re: Ex Parte Presentation — CC Docket Nos: 02-33, 01-337, 95-20, 98-10; CS Docket No. 02-52; GN Docket No. 00-185

Dear Ms. Dortch:

The central issue to be resolved by the Commission in the pending *Wireline Broadband* and *Cable Broadband* proceedings is whether a mandatory Internet service provider (ISP) access requirement should be imposed on competing wireline and cable broadband Internet access services. SBC and others have already demonstrated why, as a legal and policy matter, the Commission's decision to free cable broadband Internet access services from the rigid common carrier "wholesale transmission service" requirements of the *Computer Inquiry* rules compels a similar result for competing wireline broadband Internet access services. Thus, any mandatory ISP broadband access requirement must be established under Title I of the Act and must be applied uniformly to wireline and cable broadband Internet access services.

In this letter, SBC responds to ISP claims that the *Computer Inquiry* rules are needed to promote competition and innovation in the broadband market, and that any costs and inefficiencies created by the rules are minimal.[1] SBC provides additional information about conditions in the broadband market that obviate the need for a mandatory ISP access requirement, as well as the harms created by maintaining a regime

[1] *See, e.g.*, Ex Parte Letter from Mark J. O'Connor and Kenneth R. Boley, Counsel for Earthlink, to Marlene Dortch, Secretary, FCC, CC Docket Nos. 02-33, 98-10, 95-20, 01-337 (filed April 29, 2003) (*Earthlink April 29 Letter*); *see also* Ex Parte Letter from Donna N. Lambert on behalf of AOL, Earthlink and MCI to Marlene H. Dortch, Secretary, FCC, CC Docket Nos. 02-33, 95-20, 98-10 (filed May 1, 2003) *(AOL et al. Letter*).

of "plain vanilla" common carrier broadband transmission services for wireline broadband Internet services. This information corroborates the Commission's policy determination in the *Cable Broadband Declaratory Ruling* that any benefit of preventing speculative harms by imposing the *Computer Inquiry* rules on broadband Internet access services is outweighed by the costs and inefficiencies created by the rules.[2]

SBC also discusses how continued imposition of the *Computer Inquiry* rules exclusively on wireline broadband Internet access services that lag far behind unregulated cable broadband services in the market distorts competition and ultimately harms consumers. Not surprisingly, those ISPs seeking to retain the *Computer Inquiry* regime for wireline broadband Internet access services completely ignore the presence and dominant position of cable broadband services in the market. Indeed, a number of them have proposed a modified version of the *Computer Inquiry* rules that expressly maintains the discriminatory effects of the current asymmetric regulatory framework. The Commission should reject the ISPs' backward-looking proposal and establish a consistent ISP access policy for both wireline and cable broadband Internet access services, which is a necessary precondition for robust competition in the broadband market.

I. Introduction

In addressing the issue of mandatory ISP broadband access, the Commission must consider the consumer *benefits* produced by regulation and the resulting *costs* created by any such regulation, including the effect that regulation has on innovation and competition in the broadband market. The Commission has already made key factual and policy determinations that address many of the ISPs' concerns about eliminating the *Computer Inquiry* regime for wireline broadband Internet access services and allowing commercial arrangements to serve as the basis for ISP broadband access.

First, the Commission has already made a threshold cost/benefit determination that cable broadband Internet access services will be regulated only under Title I and will not be subject to the *Computer Inquiry* regime.[3] Therefore, cable operators have the flexibility and incentive to: (i) negotiate commercial access arrangements with ISPs that do not fit the rigid framework of the *Computer Inquiry* regime; (ii) design an Internet access service without engineering their networks to make a stand-alone wholesale broadband transmission service available to ISPs; and (iii) offer customers an integrated broadband Internet access service without making available a separate telecommunications service offering that is subject to tariffing and other Title II obligations. As a result, cable operators enjoy a significant cost advantage that allows

---

[2] *Inquiry Concerning High-Speed Access to the Internet Over Cable and Other Facilities; Internet Over Cable Declaratory Ruling; Appropriate Regulatory Treatment for Broadband Access to the Internet Over Cable Facilities*, GN Docket No. 00-185 and CS Docket No. 02-52, Declaratory Ruling and Notice of Proposed Rulemaking, 17 FCC Rcd 4798, ¶¶ 43-47 (2002) (*Cable Broadband Declaratory Ruling* or *Cable Broadband NPRM*).

[3] *Id.*, ¶ 43.

them to maintain and expand their dominant position in the broadband Internet access market. Having given these freedoms to the acknowledged market leaders, the Commission must now give the same regulatory freedoms to the secondary providers in the market.

Second, the Commission has recognized that the "one wire" world for customer access that existed at the time the *Computer Inquiry* regime was established does not exist in the broadband market.[4] As the Commission explained, the broadband market "is still in its early stages, supply and demand are still evolving, and several rival networks providing residential high-speed Internet access are still developing."[5] Not only is there intermodal competition in the broadband market, but broadband customers also may obtain "click-through" access to new services and applications from companies that do not have any access agreement or contractual relationship with the customer's broadband Internet access provider.[6] In these circumstances, "enforcement of Title II provisions and common carrier regulation is not necessary for the protection of consumers or to ensure that rates are just and reasonable and not unjust or unreasonably discriminatory."[7] The Commission's analysis of these dramatically changed market conditions for broadband services is plainly correct and applicable to wireline broadband Internet access services.

Third, the Commission has committed to establishing a "minimal regulatory environment" for broadband services based on a "functional approach" that strives to be "consistent across platforms" and avoids "embedd[ing] particular technologies."[8] As the Commission has recognized, a "comprehensive and consistent national broadband policy" is needed to promote broadband investment and competition.[9] Consumers will not reap the full benefits of a competitive broadband market if the Commission continues to impose the outdated *Computer Inquiry* regime on wireline broadband Internet access services while leaving the dominant providers of such services unregulated.

---

[4] *Review of Regulatory Requirements for Incumbent LEC Broadband Telecommunications Services*, CC Docket No. 01-337, Notice of Proposed Rulemaking, 16 FCC Rcd 22745, ¶ 5 (2001) (*ILEC Broadband Non-Dominance NPRM*).

[5] *Cable Broadband Declaratory Ruling*, ¶ 95.

[6] *Id.*, ¶ 25. SBC refers to these Internet-based content and service providers as application service providers (ASPs) to distinguish them from traditional ISPs, which provide Internet access and may or may not provide additional content and services.

[7] *Id.*, ¶ 95.

[8] *Appropriate Framework for Broadband Access to the Internet over Wireline Facilities et al.*, CC Docket Nos. 02-33, 95-20 and 98-10, Notice of Proposed Rulemaking, 17 FCC Rcd 3019, ¶¶ 4-7 (2002) (*Wireline Broadband NPRM*).

[9] *Id.*, ¶ 8.

The Commission must conduct the same cost/benefit analysis for wireline and cable broadband Internet access services and determine whether some type of mandatory ISP access requirement is necessary. It cannot, as some ISPs urge, consider the costs and benefits of imposing the *Computer Inquiry* regime on wireline broadband services in a vacuum. As discussed below, there are no market conditions that could justify an asymmetrical regulatory framework that subjects wireline broadband Internet access services to greater and more costly regulation than cable broadband services. Moreover, there are no technical differences in the configuration of wireline and cable broadband networks that could justify a disparate mandatory ISP access requirement.[10]

If anything, the standard for removing the *Computer Inquiry* rules should be *lower* for wireline broadband Internet services than it was for not applying those rules to cable broadband Internet access services, since wireline broadband providers have significantly smaller market share. Clearly, imposing a mandatory ISP access requirement on the market leaders would be less harmful to broadband competition and would be a more effective way to ensure that ISPs have broadband access. The worst and least justifiable outcome of all would be for the Commission to continue arbitrarily imposing regulation only on wireline broadband Internet access services, which unquestionably would result in a less competitive broadband market. In order to promote competition and innovation, the Commission must implement a technology-neutral ISP broadband access policy under Title I that applies equally to wireline and cable broadband Internet access services.

II. The *Computer Inquiry* Rules Are Unnecessary in the Intensely Competitive Market for Broadband Services

Some ISPs argue that the *Computer Inquiry* rules remain relevant in the broadband market, at least with respect to broadband Internet access services provided by the Bell Operating Companies (BOCs). They claim that the rules are responsible for a number of consumer benefits, including service and price competition, innovation and demand for broadband services.[11] In addition, they claim that the rules are needed to ensure that independent ISPs can continue to provide broadband services to customers.[12] These unsupported claims do not withstand scrutiny in the context of actual conditions that exist in the broadband market. The reality is that new services, innovation and lower prices are occurring *despite* the effects of the outdated *Computer Inquiry* regime, not because of it. The real driver of these consumer benefits in the broadband market is robust intermodal competition among providers using different transmission technologies and ASPs that do not rely on broadband access arrangements.

---

[10] *See* Ex Parte Letter from Jonathan J. Boynton, Associate Director – Federal Regulatory, SBC, to Marlene H. Dortch, Secretary, FCC, CC Docket No. 02-33 and CS Docket No. 02-52 (filed October 23, 2002) (*SBC October 23 Letter*).

[11] *AOL et al. Letter*, at 3.

[12] *Earthlink April 29 Letter*, at 1.

As mentioned above, the Commission itself has recognized that the market conditions upon which the *Computer Inquiry* rules are based do not exist in the market for broadband services. The "core assumption" underlying the *Computer Inquiry* rules was that "the *telephone network* was the primary, if not exclusive, means through which information service providers could gain access to their customers."[13] That "one wire" world for customer access does not exist in the broadband market, where there is "intermodal competition among multiple platforms, including DSL, cable modem service, satellite broadband service, and terrestrial and mobile wireless services."[14] Because of these changed market conditions, the Commission rejected Earthlink's demands to extend the *Computer Inquiry* rules to cable broadband Internet access services,[15] even though the Commission expressly acknowledged cable's dominant position in the market.[16] More recently, the Commission noted the emergence of Broadband over Power Line (BPL) services and initiated a Notice of Inquiry proceeding to consider them.[17] As Chairman Powell has recognized, BPL "has the potential to provide consumers with a ubiquitous third broadband pipe to the home."[18]

Intermodal competition is not the only characteristic of the present broadband market that distinguishes it from the narrowband market that existed more than twenty years ago when the *Computer Inquiry* regime was established. At that time, the Bell System had monopoly control over the vast majority of access lines. In that closed network environment, imposition of a wholesale transmission service requirement and the additional safeguards imposed by the *Computer Inquiry* rules was deemed necessary to ensure that competing information service providers could gain access to customers. The world is much different today. The BOCs do not manufacture their own equipment; they buy standardized commodity equipment from third-party vendors. The BOCs do not operate a closed network; they are subject to the interconnection, unbundling, resale and network disclosure requirements of the 1996 Act. And the BOCs have never had monopoly control over broadband facilities; they compete with various intermodal competitors and are secondary players in the market.

Contrary to the claims of some ISPs, innovation and competition in the broadband market is *not* being driven by the guaranteed availability of a common carrier wholesale

---

[13] *Cable Broadband Declaratory Ruling*, ¶ 44 (citing *Wireline Broadband NPRM*, ¶ 36 n.12).

[14] *Wireline Broadband NPRM*, ¶ 5.

[15] *Cable Broadband Declaratory Ruling*, ¶ 43.

[16] *Id.*, ¶ 78.

[17] *Inquiry Regarding Carrier Current Systems, Including Broadband over Power Line Systems*, ET Docket No. 03-104, Notice of Inquiry, 18 FCC Rcd 8498 (2003).

[18] *Id.*, Separate Statement of Chairman Michael K. Powell.

transmission service. As the Commission recognized in the *Cable Broadband Declaratory Ruling*, subscribers can and do obtain access to new services and applications from companies that do not have any access agreement or contractual relationship with the customer's broadband Internet access provider.[19] Today's market is much different than the early days of dial-up Internet access, when the primary value offered by an ISP was the provision of navigational tools, directory services, search engines and mediated access to the Internet. There is no longer a "walled garden" through which ISPs mediate their customers' access to the Internet. Many broadband customers do not even access the Internet through their ISP's web portal — instead, they select a third-party website (*e.g.*, CNN, MSNBC, ABC News) or an ASP's directory or search engine (*e.g.*, Google, MSN, Yahoo) as their home web page.

The availability of "click-through" access to services and applications offered via the Internet is even more relevant now than it was when the *Cable Broadband Declaratory Ruling* was adopted. During the past 18 months, both AOL and MSN have begun widely offering Bring Your Own Access (BYOA) services for customers with existing wireline or cable broadband Internet access connections.[20] For a reduced price, customers can use their existing broadband connection to access proprietary content, e-mail, Instant Messaging and other services offered by AOL and MSN. Significantly, an ISP need not obtain access to an underlying broadband transmission service in order to offer these BYOA services, which supplement the wide variety of content and services (*e.g.*, E-Bay, ESPN.com, Amazon.com) already available via click through access on the Internet.

In addition, new and innovative services are being offered using customer premises equipment (CPE) that can be programmed to interact with IP feature servers and application servers connected to the Internet. As with BYOA services, these services can be offered without any access arrangement involving the customer's broadband Internet access provider. Further, the IP-based CPE is technology neutral — it delivers services to end users regardless of whether the broadband access is provided over the wireline or cable broadband platform. An example of a CPE-based Internet service is Vonage's stand-alone Voice over Internet Protocol (VoIP) service, which is provided to residential and small business customers over their existing wireline or cable broadband Internet access connection.[21] Vonage's service is provided using CPE and does not require any

---

[19] *Cable Broadband Declaratory Ruling*, ¶ 25.

[20] *See, e.g.*, Reshma Kapadia, *Pace of Broadband Adoption Fuels MSN Strategy Shift*, Reuters, March 18, 2003 (discussing MSN's focus on broadband BYOA services); Alan Breznick, *Gold Rush Begins: Broadband Spawns Wave of Web Premium Content Providers*, Communications Daily, May 19, 2003, at 3 ("AOL TW, which originally promoted AOL Broadband as a rival to other high-speed ISPs, is now repositioning the service as a high-end, exclusive content product for consumers who already get their fast Internet connections from other broadband providers.").

[21] Stephen Manes, *Out, Damned Telco!* Forbes, July 7, 2003, at 112.

access to an underlying broadband transmission service. According to Vonage, it already has completed 25 million calls and signed up 27,000 customers during the past year.[22]

These are just a few examples of the new services that are being introduced every day over the Internet by ASPs that are not in any way relying on the wholesale common carrier transmission service requirement of the *Computer Inquiry* rules.[23] The potential scope of services available to broadband Internet access customers is constrained solely by the limitations of the customer's CPE or software, and by the feature servers and application servers connected to the Internet. This service configuration will be the genesis for offering many new and innovative broadband services to consumers, regardless of whether there are mandatory ISP broadband access requirements.

The Commission should trust the intensely competitive broadband market to determine the most efficient and mutually beneficial ISP broadband access arrangements. SBC believes wireline broadband providers have a particularly strong incentive to enter into commercial arrangements with independent ISPs because it gives them a way of improving their market position vis-à-vis dominant cable broadband providers. The reason SBC has made an express commitment to continue offering independent ISPs commercial access arrangements in a deregulated environment is that SBC benefits from having independent ISPs as additional sales channels for its broadband services.[24] In some cases, an independent ISP may focus on serving customers with individualized needs, such as small business customers that want personalized service with enhanced around-the-clock technical support. In other cases, large ISPs (*e.g.*, Earthlink, AOL) provide a strong brand name that helps attract customers to wireline broadband services.

In addition, SBC and other wireline broadband providers have an incentive to enter into arrangements with independent ISPs that can deliver valuable content and applications to broadband Internet access customers. Unlike cable broadband providers, who are vertically integrated with content ownership and historically have controlled content over their networks, wireline broadband providers have a long history of maximizing third-party utilization of their networks in order to achieve scale and scope. Thus, the Commission has a stronger basis for concluding that wireline broadband providers will enter into commercial broadband access arrangements with independent ISPs than it does for cable broadband providers.

---

[22] *Id.*

[23] *See, e.g.*, Benoit Faucon, *Nexedi TV Device May Offer Every Channel on Earth*, Wall St. J., July 2, 2003, at B3A (discussing new "TV Brick" product that allows television signals to be transmitted between customers over their DSL connections).

[24] *See* Ex Parte Letter from Donald E. Cain, SBC, and David P. McClure, US Internet Industry Association, to Marlene H. Dortch, Secretary, FCC, CC Docket Nos. 02-33, 95-20, 98-10 (filed May 3, 2002) (*SBC/USIIA MOU*).

SBC will continue to enter into ISP broadband access arrangements as a way of increasing subscriber growth and utilization of its broadband network regardless of any regulatory compulsion to do so. We have consistently demonstrated a commitment to independent ISPs as customers and implemented services and process improvements on their behalf beyond what is required by the *Computer Inquiry* rules. For example, in response to requests from independent ISPs, SBC created a wholesale Traffic Aggregation Service (TAS) that allows ISPs to effectively resell broadband Internet access service by entering into an arrangement with SBC's unregulated ISP affiliate. TAS is currently being purchased by a number of ISPs. SBC also established an Alliance Management Team in July 2000 to identify and resolve cross-regional issues affecting ISPs. We also have offered to distribute the web browser and other software of independent ISPs as part of the customer's DSL start-up CPE kit (when the ISP has purchased CPE from SBC), and to install the ISP's software and perform the authentication process for the ISP as part of our on-site DSL installation.

The Commission should not attempt to artificially maintain ISP diversity through regulation. Unlike the early days of dial-up Internet access, an ISP will not attract customers and have a sustainable business for broadband Internet access simply by providing customers with an entry point to the Internet. Customers expect and demand something more from their broadband Internet experience. Therefore, an ISP must distinguish itself in the market and provide superior service in order to be competitive (*e.g.*, by offering content, innovative services and applications, or customized service arrangements), regardless of whether it has the ability to obtain broadband transmission services on a common carrier basis.

Further, the *Computer Inquiry* rules preserve an outdated ISP business model at the expense of innovation, competition and lower prices for broadband services. That was the Commission's essential finding in the *Cable Broadband Declaratory Ruling*, which is applicable to all broadband Internet access services. It also is a central point of agreement between SBC and the US Internet Industry Association (USIIA) — an association of nearly 300 diverse Internet providers, including ISPs. The Memorandum of Understanding (MOU) between SBC and the USIIA expressly recognizes that removing regulation will facilitate creative market-driven commercial arrangements that ultimately will deliver creative and innovative services to consumers.[25]

All of these real-world market conditions are much more relevant to the Commission's determination of whether the *Computer Inquiry* rules are necessary in the broadband market than the purely speculative claims raised by some ISPs. There is simply no evidence of a market failure that requires regulatory intervention to ensure innovation and competition in the broadband market. Given the intense competition and rapid pace of change in the broadband market, the best way for the Commission to promote ISP broadband access arrangements is to take a hands-off approach and let the dynamic market work by itself. Even if the Commission were to reach a different conclusion, there would be no conceivable policy justification for a requirement that

[25] *Id.*

guarantees ISP access for only one out of every three broadband Internet access customers (*i.e.*, customers served by wireline broadband providers).

III. The Rigid *Computer Inquiry* Framework for Wireline ISP Broadband Access Imposes Significant Harms and Costs

The *Computer Inquiry* rules are a textbook example of how "regulatory creep" distorts competition, impedes innovation and increases prices in a competitive market. The original purpose of the *Computer Inquiry* rules was straightforward — prevent large carriers from using their control over the circuit-switched telephone network to discriminate against competing enhanced services providers or from improperly cross-subsidizing their enhanced service offerings from their regulated operations.[26] This basic nondiscrimination principle has evolved into a Byzantine body of regulation that is particularly burdensome and costly for BOCs seeking to compete in the broadband market. In particular, the *Computer Inquiry* rules:

- prohibit any wireline company from discriminating, not just in favor of an affiliated ISP, but also *among* independent ISPs;
- require all wireline companies to offer the transmission component of information services as stand-alone wholesale common carrier transmission services;
- impose Comparably Efficient Interconnection (CEI) requirements on broadband information services provided by BOCs; and
- impose an additional set of Computer III/Open Network Architecture (ONA) requirements on the BOCs to promote ISP use of the BOCs' telecommunications networks.

Although the *Computer Inquiry* rules were designed for the circuit-switched network, they have been extended reflexively to the BOCs' broadband networks.

Given the experience SBC and other wireline companies have had laboring under the *Computer Inquiry* rules for more than twenty years, it is no wonder cable operators assume any type of mandatory ISP broadband access requirement would take on a life of its own and inevitably lead to price controls and more burdensome regulatory obligations.[27] Cable operators have voiced concerns about the harmful effect of imposing

---

[26] *See, e.g., Amendment to Sections 64.702 of the Commission's Rules and Regulations (Computer III Inquiry) et al.*, CC Docket No. 85-229, Report and Order, 104 FCC 2d. 958, ¶ 12 (1986).

[27] *See, e.g.*, NCTA Comments at 26, GN Docket No. 00-185 and CS Docket No. 02-52 (FCC filed June 17, 2002); Cox Comments at 28-29, GN Docket No. 00-185 and CS Docket No. 02-52 (FCC filed June 17, 2002). Cox raises a related concern that any type of Commission regulation engenders regulatory disputes, rather than business-to-business compromises. Cox Comments at

any type of mandatory ISP broadband access requirement, let alone the burdensome *Computer Inquiry* rules that apply to wireline companies. They argue that mandatory access would "destroy[] investment expectations" and have adverse effects on broadband investment and deployment.[28] Indeed, Comcast's President stated that "'even a hint'" of regulation "could prove disastrous" to broadband deployment.[29] Cable operators also argue that a mandatory ISP access requirement would make it more difficult for broadband providers to deploy "demand-enhancing" features and content over their broadband connections.[30] These concerns are equally applicable, if not more so, for wireline broadband providers.

ISPs, in contrast, argue that because wireline companies have already incurred *Computer Inquiry* costs for narrow-band Internet access, the costs of extending this framework to wireline broadband services is minimal.[31] As discussed further below, that is not the case. The *Computer Inquiry* rules impose ongoing constraints on SBC's broadband service offerings, as well as its ability to develop and market new and innovative integrated broadband services and to take advantage of technology convergence. They also add unnecessary complexity to, and artificially increase the cost of, SBC's broadband services, thereby making SBC a less effective competitor to cable.

A. The *Computer Inquiry* Rules Stifle Innovation and Interfere With The Efficient Use of Broadband Technology

The Commission rightly characterized the *Computer Inquiry* requirement to "extract" a telecommunications service from every broadband Internet access service and make that telecommunications component available as a stand-alone common carrier offering as "radical surgery."[32] For BOCs, the *Computer Inquiry* rules are even more intrusive. Not only must they create a stand-alone wholesale transmission service for every broadband Internet access service, but they also must establish comparably efficient interconnection between the two resulting services and comply with other

---

29-30. SBC has firsthand experience with parties seeking to gain a business advantage through the regulatory process and it shares Cox's concern.

[28] Cox Comments at 19; *see also* NCTA Comments at 25 ("[R]egulation that diminishes and discourages investment will stunt the development of cable modem service and the evolution of high-speed Internet services.").

[29] *Comcast President: Cable TV Industry Would Wither if New Rules Enacted*, TR Daily (June 10, 2002) (quoting Comcast president Brian L. Roberts).

[30] NCTA Comments at 25-26; Cox Comments at 26.

[31] *See, e.g.*, Ex Parte Letter from Mark J. O'Connor and Kenneth R. Boley, Counsel for Earthlink, to Marlene H. Dortch, Secretary, FCC, CC Docket Nos. 02-33, 95-20, 01-337 (filed May 12, 2003) (*Earthlink May 12 Letter*).

[32] *Cable Broadband Declaratory Ruling*, ¶ 43.

unique *Computer Inquiry* requirements. These requirements stifle innovation and interfere with the BOCs' efficient use of broadband technology in a number of ways.

First, the *Computer Inquiry* rules restrict the design and packaging of the BOCs' broadband Internet access services. Under the *Computer Inquiry* rules, the transmission component of their broadband services must be extracted and offered as a common carrier telecommunications service. As a result, a BOC is significantly constrained in its ability to design and package retail broadband Internet access services in the most cost-effective and customer-friendly manner.

DSL transport is a prime example of a stand-alone service offering compelled by the *Computer Inquiry* rules. SBC and other wireline companies could not begin offering broadband Internet access service until they had created a stand-alone wholesale DSL transport offering for use by ISPs. In other words, they were required to design and offer two separate services, rather than a single integrated broadband Internet access service. The result was an initial delay and ongoing costs associated with the roll-out of wireline broadband Internet access services that cable and other competitors were not forced to incur.

Second, the *Computer Inquiry* rules impede the BOCs' ability to offer new and innovative broadband services. A direct consequence of the *Computer Inquiry* regime is that it restricts the development of broadband services that are not easily bifurcated into distinct "information service" and "telecommunications service" offerings. This arises from the requirement to create a stand-alone wholesale transmission service offering, as well as the requirement to provide comparably efficient interconnection between the telecommunications service and information service offerings.

This harmful effect of the *Computer Inquiry* rules is becoming more significant as the ongoing development of Internet-based applications and services, combined with the increased availability of broadband services, makes possible a new generation of "converged" services. These converged services allow customers to transport Internet, voice and data traffic on a single network. In addition, converged services provide a platform for delivering a wide range of new advanced services and applications to customers that cannot be delivered over the circuit-switched network.

In its recent ex parte letter, Verizon described how the *Computer Inquiry* rules make it extremely difficult for BOCs to offer new broadband services.[33] Whereas broadband competitors can offer any combination without regard for regulation, a BOC must spend months (if not years) analyzing potential new broadband services and determining whether and how such services can be offered in compliance with the many requirements of the *Computer Inquiry* rules. By eliminating the *Computer Inquiry* rules for broadband services, the Commission would facilitate the deployment of new services

---

[33] *See* Ex Parte Letter from W. Scott Randolph, Director – Regulatory Affairs, Verizon, to Marlene H. Dortch, Secretary, FCC, CC Docket Nos. 02-33, 95-20, 98-10, 01-337, at 1-3 (filed June 26, 2003).

by removing a major obstacle that substantially increases costs and creates needless delay and regulatory uncertainty for BOC-provided services.

Third, the *Computer Inquiry* rules interfere with a BOC's efficient use of its broadband network. The CEI requirement of the *Computer Inquiry* rules mandates the creation of a technical interface between an information service and any underlying broadband transmission services. This requirement is fundamentally incompatible with the packet technology that is used to provide broadband Internet access services. Increasingly, advances in micro-processing and chip design are enabling integration of functionality in a single piece of packet equipment that previously required separate pieces of equipment. As technology and equipment converge, traditional regulatory distinctions between discrete "information service" and "telecommunications service" functionalities are fast becoming obsolete.

BOCs are deprived of the ability to take advantage of many of the benefits, efficiencies, and innovations made possible by broadband technology convergence. In order to work around the *Computer Inquiry* rules, a BOC must disable or "turn off" certain information service functionalities in its broadband equipment, perform costly equipment modifications or purchase redundant equipment that can be used to provide comparably efficient interconnection with ISPs on a nondiscriminatory basis. Any of these options raises the BOC's costs and adversely affects its ability to make full use of broadband technology. The end result may be that it is uneconomical for the BOC to introduce a new service or functionality, even if there is customer demand for it. Further, manufacturers may not have an incentive to build equipment that accommodates the artificial unbundling of the transmission technology, and as a result, the BOCs will lag behind other providers merely because outdated regulation requires costly equipment modifications.

A good example of how the *Computer Inquiry* framework is interfering with packet technology is in the area of protocol conversion. Increasingly, broadband customers are seeking to aggregate multiple types of broadband services (*e.g.*, ATM, Frame Relay, Ethernet) onto a single broadband network. This often results in a net protocol conversion, which is an information service. As Verizon and BellSouth recently discussed in their ex parte letters, it is increasingly difficult to isolate a stand-alone telecommunications service and provide comparably efficient interconnection on a broadband network that involves multiple interfaces and protocol conversions.[34] Unlike its unregulated competitors, a BOC must choose from a number of unattractive options, such as turning off protocol conversion functionality, creating an artificial internal interface within its packet equipment or purchasing redundant equipment to ensure compliance with the *Computer Inquiry* rules.

---

[34] *See id.*, at 5-6; Ex Parte Letter from L. Barbee Ponder, IV, Senior Regulatory Counsel – D.C., BellSouth, to Marlene H. Dortch, Secretary, FCC, CC Docket Nos. 02-33, 98-10, 95-20, 01-337, CS Docket No. 02-52, at 3-6 (filed July 10, 2003).

B. The *Computer Inquiry* Rules Stifle ISP Innovation and Competition

Some ISPs argue that an essential component of the *Computer Inquiry* regime is the requirement that the prices, terms and conditions of all broadband access arrangements between the BOCs and ISPs must be "transparent and publicly available for all ISP customers and competitors."[35] This is accomplished by requiring that the transmission component of any information service be made available as a tariffed common carrier telecommunications services.[36] It also is accomplished by requiring the disclosure of CEI plans in connection with new information services. As the Commission has consistently recognized, maintaining tariffs in a competitive market environment has a number of anti-competitive effects, such as:

- removing incentives for rapid price discounting by giving competitors notice of such discounts;
- reducing or eliminating a carrier's ability to make rapid, efficient responses to changes in demand and cost;
- facilitating price coordination among competitors by collecting rate and service information in a central location; and
- limiting the ability of customers to obtain service arrangements that are specifically tailored to their needs.[37]

Each and every one of these costs is an inherent cost of imposing a tariff, CEI plan or similar public disclosure requirement on the BOCs in the intensely competitive market for broadband services.

In addition to impeding innovation, the *Computer Inquiry* rules actually insulate ISPs from competition by giving them information about what their competitors are doing in the broadband market. The Commission has recognized that advance publication of prices and other terms and conditions of services in the context of a

---

[35] *AOL et al. Letter*, at 6.

[36] The Commission recently granted limited forbearance relief from its dominant carrier tariff requirements for broadband services provided by SBC's structurally separate advanced services affiliate. *Review of Regulatory Requirements for Incumbent LEC Broadband Telecommunications Services*, CC Docket No. 01-337, Memorandum Opinion and Order, 17 FCC Rcd 27,000 (2002). As a condition for obtaining this relief, SBC's affiliate must post rates, terms and conditions of broadband access arrangements with affiliated ISPs on its website. *Id.*, ¶ 15.

[37] *See, e.g.*, *Policy and Rules Concerning the Interstate, Interexchange Marketplace, Implementation of Section 254(g) of the Communications Act of 1934, as amended,* 11 FCC Rcd 20730, ¶ 53 (1996).

competitive market is clearly anti-competitive.[38] Those ISPs who support retention of the *Computer Inquiry* regime fail to address how the benefits they may enjoy under the *status quo* translates to benefits for consumers, who are denied the full benefits of a competitive broadband market.

The ISPs' justification for maintaining common carrier regulation of BOC broadband services is the purported need to prevent BOCs from discriminating against ISPs.[39] However, an ISP may view as discriminatory business arrangements that are the everyday product of a competitive market. There is nothing improper about a BOC experimenting with a new broadband offering that it may or may not decide to offer on a widescale or permanent basis. Likewise, a BOC should be allowed to enter into creative arrangements — such as revenue sharing or a jointly provisioned broadband Internet access service — that do not fit cleanly into a rigid common carrier model. A BOC also should have the flexibility to enter into network-to-network interface arrangements with ISPs that are technically more efficient than the current arrangements. The irony is that ISPs themselves are harmed by the limitations of "lowest common denominator" broadband access arrangements.

The Commission itself recognized the value of market-driven ISP access arrangements in the *Cable Declaratory Ruling*. It noted that the business relationships among cable operators and ISPs are "evolving through negotiations and commercial decisions"[40] and that cable operators and ISPs have entered into a "wide variety of arrangements" that depart from the traditional *Computer Inquiry* model.[41] For example, cable operators are entering into joint provisioning arrangements with independent ISPs to provide broadband Internet access.[42] Under this type of arrangement, the broadband provider and the ISP cooperate to provide a retail broadband Internet access service offering.[43] In addition, cable operators are negotiating private carriage arrangements that are tailored to the unique circumstances of particular ISPs. These deals might involve revenue sharing and other mutually beneficial business arrangements that are fully consistent with the goals of section 706, but are problematic under the rigid structure of the *Computer Inquiry* regime.

Once freed from the shackles of regulation, wireline companies and ISPs undoubtedly will negotiate and enter into the same type of creative access arrangements

---

[38] *Policy and Rules Concerning Rates for Competitive Common Carrier Services and Facilities Authorizations Therefor*, Further Notice of Proposed Rulemaking, 84 FCC 2d 445, ¶ 87 (1980).

[39] *AOL et al. Letter*, at 5.

[40] *Cable Broadband Declaratory Ruling*, ¶ 30.

[41] *Id.*, ¶ 48.

[42] *Id.*, ¶ 26.

[43] *Id.*, ¶ 52.

that have developed for cable broadband Internet access services. Notably, SBC's unregulated ISP affiliate has entered into such a creative arrangement with ISPs (*i.e.*, the TAS wholesale broadband Internet access offering). SBC seeks the flexibility to enter into similar types of arrangements with ISPs through its regulated entities.

C. The *Computer Inquiry* Rules Increase the Cost of Providing Wireline Broadband Internet Access Services

In addition to the consumer harms of lost opportunities for innovative broadband services and reduced competition in the broadband market, the *Computer Inquiry* rules impose a host of direct costs that ultimately must be borne by consumers. The Computer III/ONA rules that apply solely to the BOCs encompass a broad range of nondiscrimination requirements extending not just to the transmission component of information services, but to all aspects of service provisioning — ordering, installation, maintenance and network surveillance.

In order to comply with these rules, a BOC must construct and maintain duplicate Operations Support Systems (OSS) and surveillance systems used for service order entry and status, trouble reporting entry and status, diagnostics, monitoring, testing, network reconfiguration and traffic data collection. The alternative would be to implement a costly solution for giving all ISPs direct access to these OSS and surveillance systems. A BOC also must maintain duplicate installation and maintenance processes, one for underlying wholesale transmission services and one for unregulated information services. Again, the alternative would be to provide all ISPs with installation and maintenance services for their information services (including their CPE and software). Competing broadband providers are not forced to incur these additional systems and provisioning costs in their provision of broadband services.

The Computer III/ONA requirements increase the cost of SBC's ordering and provisioning process for broadband Internet access services by approximately $43 million annually. For each new order, SBC must process an order for DSL transport and a separate order for broadband Internet access service. That means SBC must incur the cost of maintaining two distinct ordering and provisioning systems, and two distinct operations centers staffed by different personnel. In addition to generating significant costs, this cumbersome ordering process creates delays in new service activations and increases the potential for error due to the multiple steps involved. If the Computer III/ONA requirements were removed, SBC could reduce costs and activation times by efficiently processing one order for broadband Internet access service.

The Computer III/ONA requirements also increase the cost of SBC's customer care and maintenance for broadband Internet access services by approximately $24 million. Under the current rules, SBC is precluded from establishing a single point of contact for customer trouble isolation and the performance of associated maintenance and repair activities. Instead, SBC must maintain two centers, each with its own OSS and support personnel. This increases both the cost and complexity of resolving trouble reports, which adversely affects SBC's ability to quickly detect and correct service

quality problems. For example, if the problem is related to the DSL transport service, a different service center will be involved than if the problem is related to the customer's modem.

In the absence of the Computer III/ONA requirements, SBC could have a unified process for responding to customer trouble tickets, regardless of the source of the problem. A single SBC technician could then track and resolve the trouble ticket on behalf of the customer from beginning to end. Moreover, customers would likely receive better service with shorter outages because SBC would have the ability to provide unified end-to-end tracking and resolution of trouble reports. Thus, SBC's inability to integrate OSS and support personnel is more than just a cost issue, it also is a customer service issue that affects the competitiveness of SBC's broadband Internet access service.

SBC also incurs approximately $1.2 million in additional network surveillance costs due to the Computer III/ONA requirements. This includes the cost of duplicate personnel and duplicate performance management and diagnostic tools. In addition to cost savings, SBC estimates that elimination of the Computer III/ONA requirements could reduce service restoration intervals by 30% because SBC would be better able to isolate service failures through end-to-end network monitoring. In addition, SBC could have better network information and tools for giving customers real-time information about service disruptions.

Earthlink attempts to characterize the "duplication" costs compelled by the Computer III/ONA rules as a product of the BOCs' own decisionmaking.[44] In reality, a BOC has no choice but to incur additional costs *because of the Commission's regulations*. The only business decision involved is how to most efficiently comply with the rules. SBC determined that it would be cheaper and more efficient to construct and maintain two sets of systems, one for the ISP wholesale common carrier transmission service and one for the retail information service. The alternative option — giving all ISP direct access to OSS and network surveillance systems — would be extremely costly. Moreover, giving ISPs such direct access would raise security concerns that are extremely difficult and costly to address. In order to ensure that an ISP's proprietary information is not accessible by other ISPs, SBC would have to implement some type of partitioned access to its system. In either case, the additional costs are the direct result of regulation.

IV. The Commission Must Adopt a Consistent ISP Access Policy for Competing Wireline and Cable Broadband Internet Access Services

ISPs have challenged the magnitude of the costs imposed by the *Computer Inquiry* rules, but they cannot and do not dispute the fact that imposition of the rules only on wireline broadband Internet access providers distorts competition and harms consumers in the broadband market. Cable operators concede as much. NCTA has acknowledged that imposing regulation uniquely on wireline broadband Internet access

[44] *Earthlink May 12 Letter*, at 5.

services makes wireline companies "*a less effective competitor to cable*" and denies wireline broadband customers the benefits of lower prices and higher quality services.[45] The Commission's own market data confirms the negative impact of asymmetric regulation. It is no accident that unregulated cable broadband Internet access services enjoy a two-to-one market share lead over wireline broadband service that are subject to regulation, or that cable modem providers have continued to maintain their lead in the market.[46] The ultimate effect of the current regulatory imbalance is to deny consumers the many benefits that will flow from unfettered investment and competition among *all* broadband providers.

Earthlink acknowledges that compliance with the *Computer Inquiry* rules is not cost free, but it dismisses concerns about such costs by arguing that BOCs are free to recover their costs in their DSL rates.[47] This argument completely misses the point and ignores the presence of competing cable modem services that are not subject to the same rules. Wireline broadband providers simply cannot compete if they are forced to continue complying with costly and burdensome requirements that their direct competitors — competitors that have a dominant position in the market — are not forced to bear. The issue is not one of cost recovery, but rather one of DSL services not being price competitive with cable modem services.

A uniform regulatory framework for cable and wireline broadband Internet access services is a fundamental precondition for sustainable competition. Therefore, the Commission must conduct the same cost/benefit analysis for cable and wireline broadband Internet access services and determine whether some type of mandatory ISP access requirement is necessary. The Commission cannot, as some ISPs are urging, consider the costs and benefits of imposing the *Computer Inquiry* rules on wireline broadband services in a vacuum. Any mistake on the Commission's part will adversely affect broadband competition and innovation far worse than any perceived benefit to be gained. Thus, the Commission must reject the *Computer Inquiry* framework in assessing what, if any, ISP access requirements are warranted if there is to be any semblance of a consistent analytical framework underlying the Commission's cost/benefit determination.

To some extent, the ISPs' strategy of avoiding any discussion of cable broadband Internet access services is an outgrowth of the Commission's decision to silo its consideration of mandatory ISP broadband access into distinct cable and wireline

---

[45] NCTA Comments at 42, GN Docket No. 00-185 and CS Docket No. 02-52 (FCC filed June 17, 2002) (emphasis added).

[46] *Services for Internet Access: Status as of December 31, 2002*, prepared by the Industry Analysis and Technology Division of the FCC's Wireline Competition Bureau (June 2003) (showing that during the last six months of 2002, cable broadband Internet access lines in service increased from 9.2 million to 11.4 million and ADSL Internet access lines in service increased from 5.1 million to 6.5 million).

[47] *Earthlink May 12 Letter*, at 4.

proceedings. It should not be surprising that ISPs seeking to preserve the *Computer Inquiry* regime are focused on the regulation of wireline broadband services,[48] since the Commission already has determined that the *Computer Inquiry* regime will not be extended to cable broadband services. Nevertheless, the ISPs' myopic focus on wireline broadband providers (and even more narrowly on the BOCs) does not reflect the realities of the broadband market. The Commission should reject the ISPs' backward-looking approach and follow through on its stated objective to establish a "rational" and "consistent" regulatory framework for competing cable and wireline broadband services that reflects the realities of the nascent broadband market.[49]

In an attempt to downplay the significance of intermodal competition in the broadband market, Earthlink argues that there is a distinct wholesale DSL market because "there are no alternative common carrier wholesale broadband services reasonably available to independent ISPs to meet their needs . . . ."[50] The Commission reached a much different conclusion in the *Cable Declaratory Ruling*. It found that "the business relationships among cable operators and ISPs and their offerings to consumers are still evolving through negotiations and commercial decisions."[51] For example, the Commission noted that AOL Time Warner and others have embarked on a multiple-ISP approach to offering cable modem service and that Earthlink had reached agreements with Charter to provide rebranded cable modem service and with AT&T (now Comcast) to provide cable modem service in several markets.[52] The Commission did *not* conclude that ISPs would be denied access to cable modem services in the absence of a regulatory requirement. Thus, the Commission could not reasonably rely on a contrary conclusion as the justification for imposing a mandatory ISP access requirement on wireline broadband Internet access services.

As previously discussed, the Commission also noted that cable modem subscribers may obtain access to new services and applications from companies that do not have an access agreement or contractual relationship with the cable modem provider.[53] Earthlink's argument that a common carrier wholesale transmission service is needed to ensure ISP diversity and innovation completely ignores the development of services that deliver services and applications over the Internet *without* having to obtain wholesale access to broadband transmission services. The Commission was right to

---

[48] *See e.g.*, *Earthlink April 29 Letter*; *AOL et al. Letter*.

[49] *Cable Broadband Declaratory Ruling*, ¶ 6; *Wireline Broadband NPRM*, ¶ 6.

[50] *Earthlink April 29 Letter*, at 1.

[51] *Cable Broadband Declaratory Ruling*, ¶ 30.

[52] *Id.*, ¶¶ 24-26.

[53] *Id.*, ¶ 25.

consider these types of market developments in the *Cable Declaratory Ruling*, and it likewise must do so in the *Wireline Broadband* proceeding.

Moreover, Earthlink's argument that a distinct wholesale market for DSL service exists because there currently is no mandatory ISP access to cable modem services is circular. The Commission cannot simply create an arbitrary wholesale market only for wireline broadband Internet services by regulatory fiat. In this case, the Commission has consistently recognized the fact that cable modem providers and DSL providers compete head-to-head for the same customers in the broadband market.[54] Therefore, it would be unreasonable and patently unlawful for the Commission to conclude that there is a wholesale market for DSL service because of its own policy decision not to impose a mandatory access requirement on cable modem services. Instead, the Commission should make a consistent determination about whether some type of mandatory ISP access requirement is needed for broadband services in the pending *Cable Broadband* and *Wireline Broadband* proceedings.

There are no other legitimate reasons to adopt different ISP broadband access rules for wireline and cable broadband Internet access services. Some cable operators have argued that technical differences between wireline and cable broadband networks could justify disparate application of *Computer Inquiry* in addressing multiple ISP broadband access regulation.[55] The records in the *Cable Broadband* and *Wireline Broadband* proceedings make clear that is not the case. SBC submitted an extensive technical document demonstrating that the network architectures of cable broadband networks and wireline broadband networks are functionally equivalent for purposes of providing access to multiple ISPs.[56] A similar packet-based network is used to route traffic between the cable head end and each ISP as is used to route traffic between the wireline central office and each ISP. The nature of the facilities between the customer premises and the cable head end or wireline central office is irrelevant to the issue of ISP access, which occurs at the head end and central office, or points beyond, for both cable and wireline broadband networks, respectively. In any event, the "last mile" facilities of cable and wireline broadband networks are quite similar — both networks use packet equipment to carry Internet traffic and, as wireline carriers increasingly deploy Next Generation Digital Loop Carrier and Fiber-To-The-Home, both networks use shared fiber facilities.

---

[54] *See, id.*, ¶ 9; *ILEC Broadband Non-Dominance NPRM*, ¶ 5.

[55] AT&T Comments at 25, GN Docket No. 00-185 and CS Docket No. 02-52 (FCC filed June 17, 2002); *see also* Cox Comments at 23, GN Docket No. 00-185 and CS Docket No. 02-52 (FCC filed June 17, 2002).

[56] *See SBC October 23 Letter*; *see also* Attachment A (technical diagrams comparing cable and wireline broadband networks).

V. The Commission Should Reject the ISPs' Backward-Looking Proposal for a Modified Version of the *Computer Inquiry* Rules

AOL Time Warner, Earthlink and MCI recently submitted a proposal that purports to "streamline" Title II regulation of BOC broadband information services. As a threshold matter, the ISPs' proposal retains all the harms and costs associated with the *Computer Inquiry* rules discussed above. In particular, it retains the rigid wholesale transmission requirement, the technology constraints imposed by the CEI requirements and the nondiscriminatory OSS requirement. Moreover, the ISPs' proposal is fundamentally flawed because it fails to establish a consistent ISP access requirement for cable and wireline broadband Internet access services. The Commission already has determined that the "radical surgery" compelled by the *Computer Inquiry* regime should not be required of cable broadband Internet access services. The ISP proposal by its terms does not apply to cable operators, even though they are the dominant providers of broadband Internet access services in the market. On these grounds alone, the proposal must be rejected.

To make matters worse, the ISP proposal is limited to only a subset of wireline broadband providers. Unlike the existing *Computer Inquiry* rules, which require all wireline broadband providers (including independent LECs, CLECs and IXCs) to make the underlying transmission component of broadband information services available as stand-alone common carrier offerings, the proposal would impose this obligation only on the BOCs. Therefore, the ISP proposal is even more arbitrary and discriminatory than the current rules. AOL Time Warner, Earthlink and MCI do not even attempt to explain, let alone justify, this significant change in the scope of the *Computer Inquiry* rules.

Moreover, the ISP proposal would not result in any overall streamlining of the *Computer Inquiry* rules. Rather, the proposed modifications simply would replace the existing rules with different rules that in many ways are worse than the *status quo*. For example, the proposal would eliminate certain reporting and filing obligations, but it would replace these obligations with an onerous and unlawful enforcement mechanism that would perpetuate all of the delay and uncertainty created by the existing *Computer Inquiry* rules. The end result is that the process of designing and implementing new broadband services would not be at all streamlined.

The negative impact of the unlawful and onerous enforcement provisions of the ISP proposal far outweigh any marginal benefits of reducing the filing and reporting obligations under the *Computer Inquiry* rules. By establishing a "rebuttable presumption" that a BOC has violated the ISP access rules if it fails to produce sufficient data for the Commission to resolve the complaint, the proposal effectively would establish a "guilty until proven innocent" presumption that turns the complaint process on its head. Because a BOC would have the burden of proving that any planned changes to the rates, terms and conditions of any broadband transmission service or capabilities are not discriminatory, it would have to maintain exhaustive documentation so that it could defend itself in the event of an ISP complaint. Thus, the proposed "deregulatory

approach" is much worse than the Commission's existing rules, which are more than sufficient to address the ISPs' speculative concerns that a BOC could fail to disclose relevant information in response to complaints or improperly destroy evidence.

In addition, the "limited shift of burden" effectuated by the new enforcement rules would create an endless regulatory quagmire for the BOCs and the Commission. The modified rules would lead to a flood of complaints by ISPs seeking to use the regulatory process as a tool for gaining leverage in their negotiations for BOC broadband access arrangements. ISPs would have no disincentive to raising frivolous discrimination claims. And the primary focus of ISP complaints would immediately shift from the issue of whether a BOC has discriminated against ISPs to the issue of whether a BOC has maintained sufficient records to *prove* that it has not discriminated against ISPs. Forcing a BOC to prove a negative every time an ISP raises a discrimination allegation would be an impossible task. It inevitably would lead to increased bureaucracy and record keeping requirements established on an ad hoc basis through the complaint process. It also would put the Commission in the difficult position of being the arbiter of whether the BOCs' record keeping is sufficient to prove non-discrimination.

The proposed rules governing the BOCs' provision of wholesale transmission services to ISPs also represent a step backwards from the existing *Computer Inquiry* rules. While the proposal would give a BOC the option of not filing a tariff, specific information regarding every arrangement with an ISP would have to be posted on the Internet. The proposed rules closely resemble the contract tariffing rules that currently apply to the BOCs' dominant carrier access services in areas where they have received pricing flexibility. This hardly represents a meaningful streamlining of the rules that reflects the intense competition in the broadband market. The modifications would do very little to reduce the delays and burdens caused by having to develop generally available "plain vanilla" offerings. And the rules would dampen competition in the market by providing the same public disclosure of prices, terms and conditions of new broadband services that occurs today.

In addition, the ISP proposal contains intrusive service regulations that stifle the type of innovation and experimentation that could occur if the BOCs' broadband services were freed from dominant carrier regulation. Specifically, a BOC would continue to be required to provide advance written notice of any change in a broadband service or capability, as well as any discontinuance of a broadband service capability. Further, a BOC would be required to respond in writing to an ISP request for a new broadband transmission service within 15 days and offer any new broadband service or capability "upon reasonable request" by an ISP within 90 days. These requirements would give ISPs significant control over a BOC's broadband network and subject a BOC to service obligations that are even *more burdensome* than the existing rules for its circuit-switched network.

VI. The Commission Should Establish a Minimal Regulatory Environment for Broadband Internet Access Services Under Title I

The current regulatory regime for broadband Internet access services has a number of silos based on the identity of the provider and the services they historically offered to customers. Cable operators benefit enormously from these regulatory silos. Because cable television services are not subject to common carrier regulation, the Commission declined to require cable operators to perform "radical surgery" and offer the transmission component of their broadband Internet access services as a stand-alone common carrier offering.[57] The transmission component of broadband Internet access services provided by wireline companies, on the other hand, is subject to the same common carrier regulation as services provided over the legacy circuit-switched telephone network. The anomalous result is that the secondary providers of broadband Internet access services are regulated as if they had bottleneck facilities and a dominant position in the market. This is untenable.

A key benefit of Title I is that it provides a means of applying consistent regulations and policies across all competing broadband platforms, regardless of technology or the historical classification of the service provider. As previously discussed, it would be wholly inconsistent with market realities and a Title I approach to address the issue of multiple ISP access differently for cable operators than for wireline companies. The results of the Commission's cost/benefit analysis necessarily will be the same for cable and wireline broadband Internet access services. To the extent the Commission determines that some form of multiple ISP access should be mandated under Title I, all broadband Internet access service providers must have the same flexibility — from a network, service design and operational perspective — to satisfy its access obligation. In other words, any multiple ISP access requirement must be competitively and technologically neutral in its effect.

Title I also provides a framework for the Commission to establish a "minimal regulatory environment" for broadband services.[58] By regulating broadband Internet access services under Title I instead of Title II, the Commission will give itself the flexibility to allow market forces, not regulation, to shape broadband offerings, while at the same time retaining jurisdiction to intercede at some later point if necessary to protect consumers. This market-based policy will benefit broadband Internet access service providers and ISPs, and ultimately produce new and innovative services for consumers.

There are two prerequisites for ensuring a minimal regulatory environment for broadband services. First, the Commission should not directly or indirectly impose Title

---

[57] The Commission did not rely solely on the fact that cable operators are not common carriers because, as the Commission recognized, cable operators increasingly are providing telephone service as common carriers. *Cable Broadband Declaratory Ruling*, ¶¶ 44-47.

[58] *Wireline Broadband NPRM*, ¶ 5.

II regulation on broadband Internet access services. The result would be "regulatory creep" that extends regulation to the Internet. As the Commission determined in the *Cable Broadband Declaratory Ruling*, a broadband Internet access provider should have no obligation to structure its services and arrangements with ISPs in such a way that involves the artificial creation of stand-alone telecommunications services that are subject to Title II regulation. In addition, broadband Internet access providers should have the flexibility to provide ISPs with stand-alone broadband telecommunications on a private carrier basis.

Second, the Commission should assert jurisdiction over all broadband Internet access services and preclude states from regulating such services. In section 706 of the 1996 Act, Congress directly instructed the Commission to use its regulatory jurisdiction to promote competition and to encourage deployment of broadband facilities. Inconsistent and intrusive state regulation undermines these statutory goals.

As previously discussed, there is no evidence of a problem in the broadband market that would necessitate any type of mandatory ISP access requirement at this time. If, however, the Commission concludes that proactive regulation of broadband Internet access services is in the public interest, then it should adopt the least intrusive requirement that is narrowly tailored to address an actual, rather than a speculative, market failure. The Commission is not faced with an "all or nothing" decision about whether to retain the *Computer Inquiry* rules or completely deregulate broadband services. Indeed, the Commission itself has identified possible alternative requirements, such as a general rule of reasonableness for broadband providers in their dealings with ISPs seeking access,[59] or a requirement to provide access to a small number of independent ISPs and a prohibition against interfering with or discriminating against the content of independent ISPs.[60]

In making its determination whether and what type of mandatory ISP broadband access requirement is needed, the Commission should carefully consider actual conditions in the broadband market and the particular problem or market failure it is seeking to address. For example, if the Commission is concerned about the ability of broadband customers to obtain unrestricted access to content and services on the Internet, that is a much different concern than ensuring ISPs can obtain access to broadband transmission services for the provision of broadband Internet access services. Not only would the Commission have to conduct a different market analysis, but it also could craft a much more targeted regulatory requirement in response to any identified problems. Likewise, if the Commission is concerned about possible disruption to independent ISPs when it eliminates the *Computer Inquiry* regime for broadband Internet access services, then the solution is to address those concerns directly by providing for a reasonable

---

[59] *Cable Broadband Declaratory Ruling*, ¶ 88.

[60] *Id.*, ¶ 2 n. 8 (citing AOL Time Warner Merger).

transition period. SBC and USIAA already have proposed such a transition in their MOU.[61]

VII. Conclusion

The Commission has been presented with a lot of hard information in this proceeding, which should carry much more weight than the speculative concerns that some ISPs have raised. Moreover, the Commission has already made important decisions about the development of the broadband market and the costs of imposing regulation in that market. The Commission's holdings in the *Cable Broadband Declaratory Ruling* reflect a policy determination that it is not in the public interest to require the indisputable leaders in the broadband Internet access market — cable operators — to provide ISPs with a wholesale common carrier broadband transmission service. That same policy determination should be applied to all broadband Internet access providers.

It is time for the Commission to take action and establish a forward-looking regulatory environment for wireline and cable broadband Internet access services under Title I. Continued inaction on the Commission represents an implicit acceptance of the competitive distortions and consumer harms created by the significant regulatory disparity that exists as a result of the imposition of the *Computer Inquiry* regime only on wireline broadband Internet access providers. The Commission must apply consistent policies and regulations to competing cable and wireline broadband services in order to ensure the competitiveness of the broadband market and to deliver the many consumer benefits of new and innovative broadband services.

Respectfully Submitted,

/s/ Jeffry Brueggeman

cc:

Christopher Libertelli
Matthew Brill
Jessica Rosenworcel
Daniel Gonzalez
Lisa Zaina
William Maher
Scott Bergmann
Carol Mattey
Jane Jackson
Michelle Carey
Brent Olson
Cathy Carpino
Harry Wingo
Terri Natoli
Robert Pepper
Jeffrey Carlisle
Kyle Dixon
Jonathan Cody
Michael Carowitz
W. Kenneth Ferree
Barbara Esbin
Johanna Mikes

[61] *See SBC/USIIA MOU* (providing that SBC is willing to grandfather existing arrangements with ISPs for the remaining term of the existing agreement or for one year, at the choice of the ISP).

Attachment 1

Cable & Wireline: Shared Packet Networks

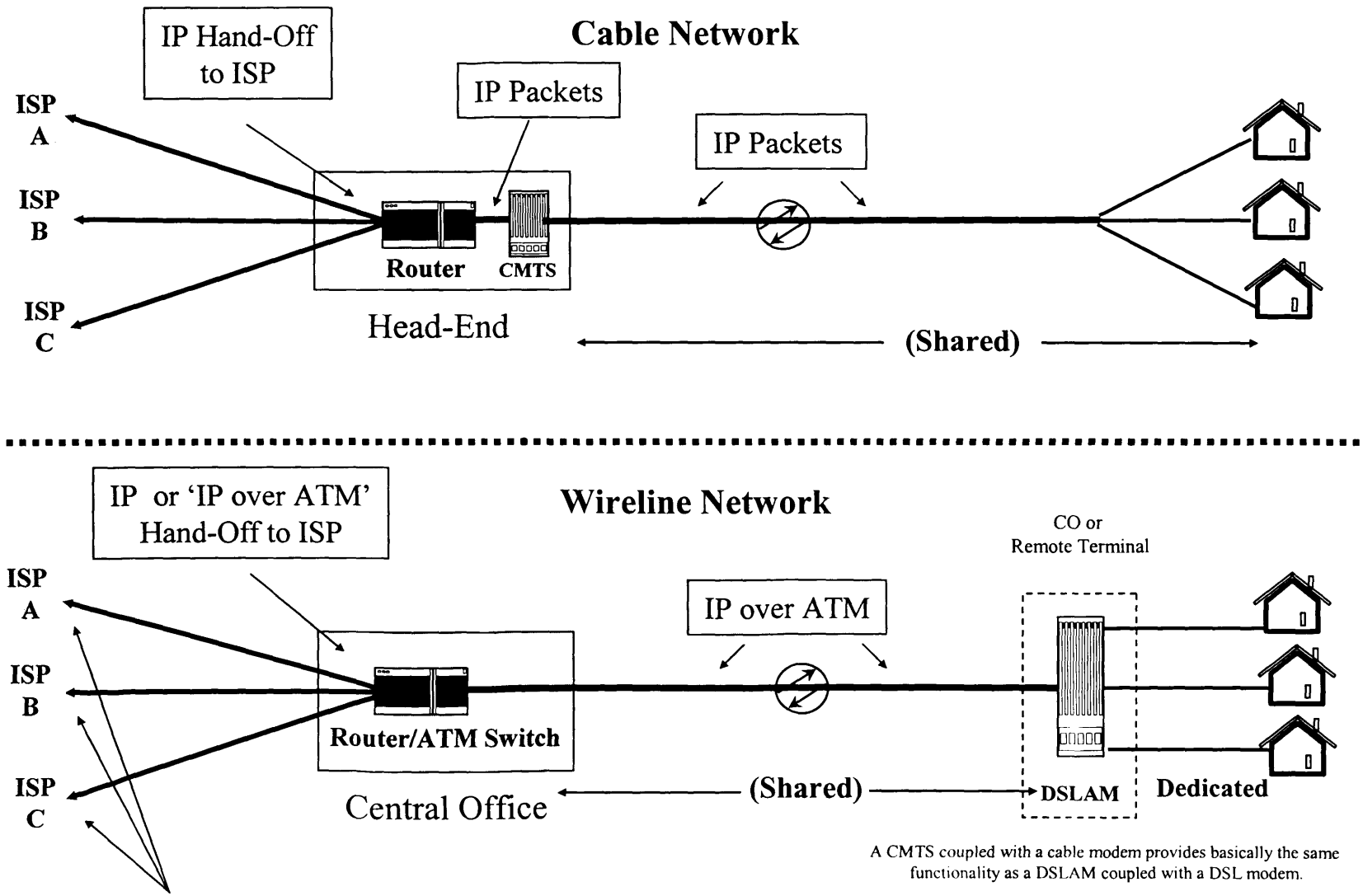

The Last Mile Architecture has No Bearing on ISP Access

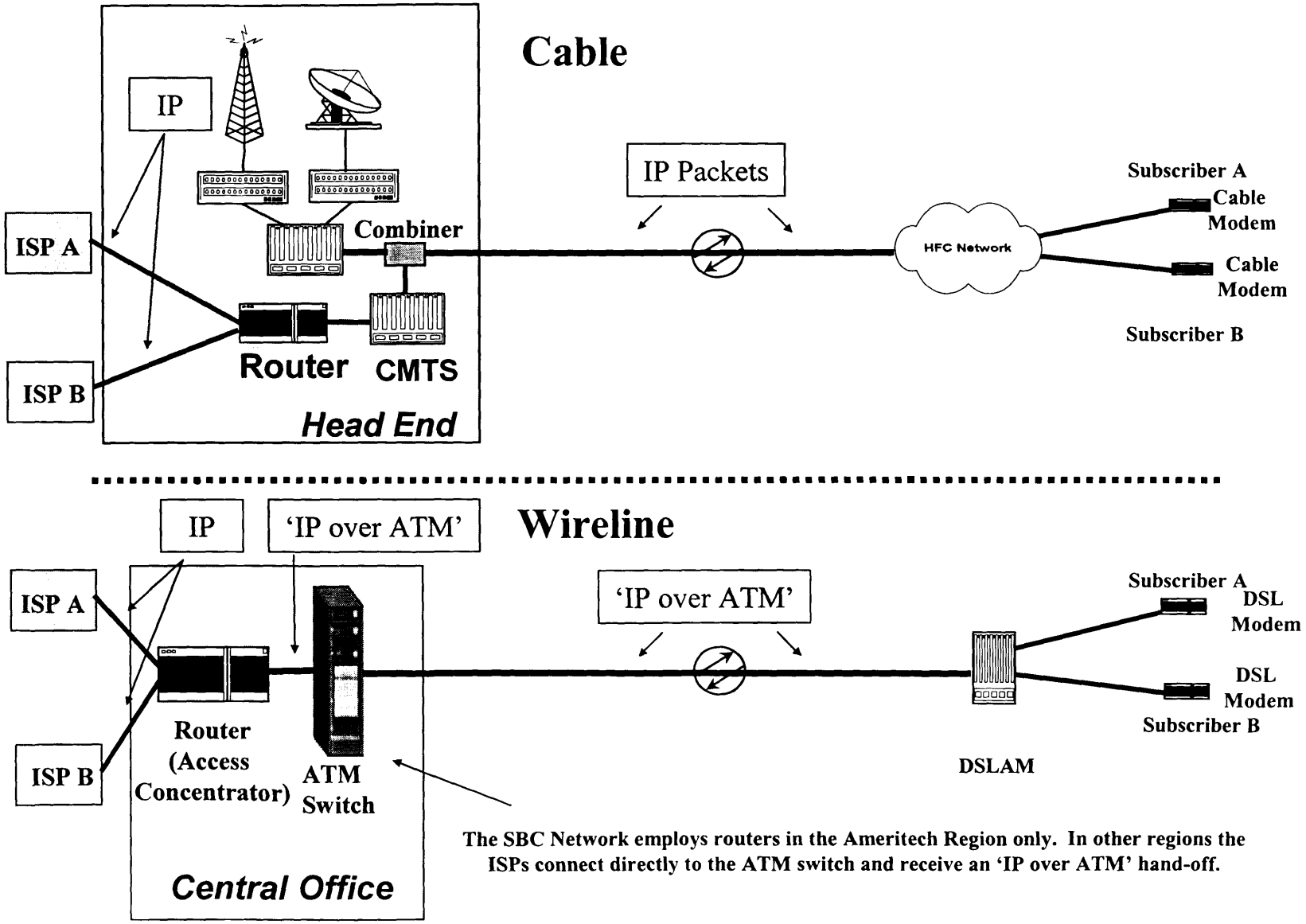

The SBC Network employs routers in the Ameritech Region only. In other regions the ISPs connect directly to the ATM switch and receive an 'IP over ATM' hand-off.