AM Broadcast Transmitters

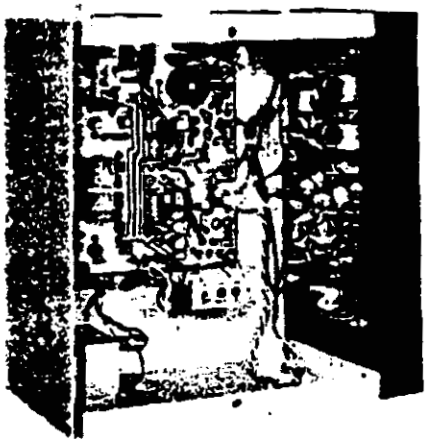

AM-5

Transmitter Specifications

R.F. Power Output	
AM-5	Adjustable, 1 to 5 Watts (carrier)
AM-30	Adjustable, 2 to 30 Watts (carrier)
AM-60	Adjustable, 6 to 60 Watts (carrier)
R.F. Power Adjustment	Internal
R.F. Power Indicator	
AM-5	Green LED
AM-30, AM-60	Internal Meter
Type of Emission	30A3 (Amplitude Modulation)
Frequency Range	530 kHz to 1610 kHz
R.F. Output Impedance	50 ohms, unbalanced SO-239 connector
Carrier Frequency Stability	± .003%, -20°C to + 50°C 105 to 128 VAC line (-4°F to +122°F)
R.F. Harmonic Suppression	<45dB below carrier
Carrier Shift	< 2%, 0-100% Modulation
Noise Level	< 55dB below 100% modulated carrier
Audio Input Impedance	600 ohm, transformer balanced
Audio Input Level	-15dBm to +10dBm for 100% Modulation
Optional Limiter	Factory set to prevent more than 100% Modulation Attack Time 3.3 ms Release Time, 330 ms
Audio Frequency Response	20 Hz to 15 kHz ± 1.0dB
Audio Distortion	< 2%, 95% Modulation
Modulation Indicator	
AM-5	Red LED peak flasher
AM-30, AM-60	Internal Meter
Modulation Control	Internal Adjustment
Power Input	117VAC, 50/60 Hz
Power Consumption	
AM-5	45 Watts
AM-30	150 Watts
AM-60	250 Watts
Dimensions	
AM-5, AM-30	12"H, 6.5"D, 11.75"W
AM-60	12"H, 6.5"D, 23"W
Weights	
AM-5	12 lbs
AM-30	20 lbs
AM-60	36 lbs

LPB LPB Inc.
28 Bacton Hill Road, Frazer, Pa. 19355 (610) 644-1123 Fax (610) 644-8651

MODEL TCU-30 *Transmitter Coupling Unit*

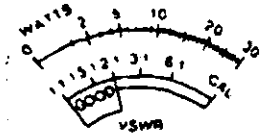

TCU-30 Meter Detail

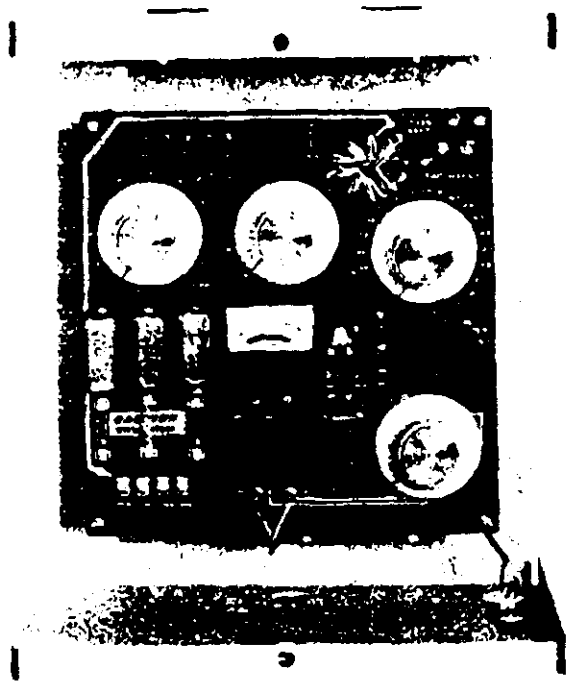

The LPB Model TCU-30 Transmitter Coupling Unit is required when coupling an AM transmitter into a non-impedance matched inductive radiator, such as electrical power wiring systems or other distributed wiring systems. The TCU-30 is the third generation result of over 20 years experience and product development in carrier current technology.

All functions required for optimum coupling (matching) into single or 3-phase power systems are provided by the TCU-30 including power line inductance correction, impedance selection, power line isolation and complete metering.

The TCU-30 is specifically designed to eliminate internal toroid heating, one of the major causes of coupling unit failure that has plagued all previous designs. Other innovations include extremely broad impedance matching selection (21 steps) and a calibrated transmitter power output meter with a direct reading VSWR scale. Such metering allows accurate measurements of power and VSWR from only one watt to the rated maximum output of 30 watts.

With modular construction, any two units in this equipment series can be rack mounted. For additional flexibility, the individual units may be wall mounted in any convenient configuration.

TCU-30 SPECIFICATIONS

Power Input	30 watts RMS, continuous
Input Impedance	50 ohms, unbalanced
Output Impedance	0.5 ohms to 65 ohms (1:1 VSWR) 0.2 ohms to 130 ohms (2:1 VSWR)
Output Impedance Selection	21 steps
Frequency Range	530 kHz to 1610 kHz
Inductance Correction	100 pf to 10,900 pf in 109 steps
Matching Circuit	2 stage toroidal, bifilar and pentafilar wound
Input Connection	SO-239 coaxial connector
Output Connection	Screw-terminal barrier strip
AC Line Connection (output)	660 VAC line to line (1100 VAC optional) 380 VAC line to ground (635 VAC optional)
Metering	Transmitter power output (0-30 watts) Voltage Standing Wave Ratio (1:1 to 6:1)
Dummy Load	50 ohms, non-inductive
Controls	21 position impedance selector 2 capacitor decade selectors, capacitance decade IN-OUT, SWR calibration Function switch: Power, Calibrate, Test (Match), Operate
Minimum Power Input for accurate matching	1 watt
Size	12"H, 8.5"D, 11.75"W
Mounting	Wall mount or rack mount
Weight	15 lbs

LPB LPB Inc.
28 Bacton Hill Road, Frazer, Pa. 19355 (610) 644-1123 Fax (610) 644-8651

MODEL LA-30 *30 Watt Linear RF Amplifier*

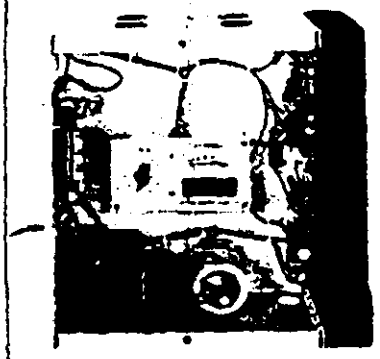

The LPB Model LA-30 Linear RF Amplifier is used as a 30 watt signal repeater to boost the RF output signal within an RF distribution system or a carrier current system in a very large building or complex of buildings.

SPECIFICATIONS

R.F. Power Output	Adjustable 2-25 watts
Frequency Range	530 to 1610 kHz
Distortion	Intermod 30dB down or better @ 30 watts output
R.F. Input Impedance	50 ohms resistive
Input Level	0.25 watts min. 2 watts max. (3.5 to 10 vrms carrier)
Connectors	2 type SO-239 coaxial connectors
Power Requirements	117 VAC, 50/60 Hz 150 watts maximum
Weight	15 lbs
Size	12"H, 8.5"D, 11.75"W

MODEL T-1A *Power Splitter*

The LPB T-1A Power Splitter accepts an RF signal output from a low power AM transmitter and divides the output power into equal portions. This may be required to drive two or more RF distribution systems in adjacent locations.

Standard models of the T-1A are available to divide the input power into 2, 3, 4, 5 or 6 equal portions.

SPECIFICATIONS

Input Impedance	50 ohms unbalanced
Output Impedance	50 ohms, unbalanced
Power Input	Up to 50 watts RMS, continuous
Frequency Range	360 kHz to 2 mHz
Outputs	2, 3, 4, 5 or 6 (specify when ordering)
Insertion Loss	3dB per output
Input/Output Connections	Standard SO-239 coaxial connectors
Dimensions	Width 6.25", Height 7.25", Depth 2"
Weight	Approximately 14 oz

Special division ratios and impedance levels available to order

NF *Series Radiating Cable*

LPB "NF" Series Radiating Cable is a controlled radiation "leaky" coaxial cable for use in Restricted Range AM Broadcast Systems.

The NF-1D Cable is designed for use where no more than a 1,000 feet continuous linear transmission zone is required. The NF-2D cable is a lower loss, heavy duty cable, which may be used for a linear transmission zone of up to 5,000 feet.

SPECIFICATIONS

Construction	Coaxial, with drain wire
Dielectric	Solid polyethylene
Jacket	Polyvinylchloride (direct burial)
Characteristic Impedance	50 ohms, @ 1 mHz
Dimensions	NF-1D: ¼" Dia., NF-2D: [illegible]" Nominal, ½" Max. Dia

LPB LPB Inc.
26 Bacton Hill Road, Frazer, Pa. 19355 (610) 644-1123 Fax (610) 644-8651

3/88

INSTRUCTION MANUAL

LPB MODEL AM-60P TRANSMITTER

PSSA/PSRA LOW POWER AUTHORIZATION

TABLE OF CONTENTS

SECTION	DESCRIPTION	PAGE
1.0	INTRODUCTION	1
2.0	WARRANTY AND SERVICE INFORMATION	1
2.1	Limited Warranty	
2.2	Service	
3.0	APPLICABLE FCC RULES	2
3.1	FCC Metering Requirements	
3.2	Advising the FCC	
4.0	CIRCUIT DESCRIPTION	3
4.1	Summary	
4.2	Power Supply	
4.3	Exciter	
4.3.1	Audio	
4.3.2	Oscillator	
4.3.3	RF Pre-Driver and Driver Stages	
4.4	RF Power Amplifier	
5.0	INSTALLATION	5
5.1	Location and Mounting	
5.2	Interfacing the Transmitter	
6.0	CONTROL SETTINGS AND OPERATION	6
6.1	User Control Description and Location	
6.2	Setup and Operation	
7.0	MONITORING AND REMOTE CONTROL	8
7.1	Modulation Monitoring	
7.2	LPB Tri-power Opitonal remote	
8.0	BASIC TROUBLESHOOTING GUIDE	9
9.0	MAINTENANCE	10
10.0	PARTS LIST AND SCHEMATIC	10

INSTRUCTION MANUAL

LPB MODEL AM-60P TRANSMITTER

PSSA/PSRA LOW POWER AUTHORIZATION

Revised February 15, 1990

1.0 INTRODUCTION

Low Power AM Transmitters are the product of LPB's nationally recognized broadcast experience since 1960. This 'P' version solid state transmitter utilizes state-of-the-art technology and has been Type Approved for licensed use under PART 73 of the FCC Rules and Regulations.

The transmitter power output (TPO) of 60 watts is adjustable down to about 10 watts. Two RF power amplifiers are driven by the standard "P" version exciter. Their outputs are then combined via a conventional torroidal power combiner. A Tri-Power option is available for remote power reduction. This option is described later in this manual.

2.0 WARRANTY AND SERVICE INFORMATION

2.1 Limited Warranty

We guarantee that you will find the appearance, workmanship and standards of material and construction of this equipment in keeping with the application and with good standards of commercial practice.

For a period of one year from date of delivery, we guarantee this equipment against any form of failure provided that, in the opinion of the manufacturer, no improper use of or modification to this equipment is at fault. The guarantee also requires that the equipment is properly installed and operated within stated parameters. During this period, LPB will furnish materials and labor in our shops to correct any failure. Shipping charges are the responsibility of the customer.

After warranty expiration, service will continue to be available from LPB.

2.2 SERVICE

This equipment is designed and constructed for optimum results and minimum failure. If any problem or question should arise, please call or write LPB Customer Service immediately. Identification information which you should provide

when calling or writing includes: model number, serial number, operating frequency and date of purchase. This information is found on the indentification label on the transmitter.

This equipment, in general, **IS NOT USER SERVICEABLE.** If a malfunction arises or is suspected, we urge you to return the equipment to the factory for proper repair.

If the need for service arises contact LPB's Customer Service Department for a **Material Return Authorization (MRA)** and shipping instructions before shipment. The MRA number must be on the shipping label.

LPB, Inc. Phone 215-644-1123
FAX 215-644-8651

3.0 APPLICABLE FCC RULE

3.1 FCC Metering Requirements

In paragraph 10 of *Report and Order in the matter of MM Docket* 85-125, adopted December 20, 1985, the Commission ammended Part 73.58 to read as follows:

> "However, auxiliary transmitters with nominal power ratings of 100 watts or less are not required to be equipped with instruments to determine power by the indirect method provided that the licensee can determine the antenna input power at all times."

The Relative Power Output meter in the LPB AM-60F transmitter does not satisfy this metering requirement. We suggest the licensee employ an Antenna Current Meter, such as the Simpson model 37 (3-1/2") RF Ammeter. When looking into a 50 ohm load, the 60-watt transmitter needs a 0 - 1.5 A, full-scale ammeter.

It should be noted that the Commission does not require this RF ammeter meter to be in the circuit at all times, however, you must have and use this capability to measure the output.

3.2 Advising the FCC

When installing a transmitter for use with low power authorization, the user must advise the Commission, **in writing**, of this action. The make and model number of the transmitter must be submitted.

AM-60P TRANSMITTER BLOCK DIAGRAM

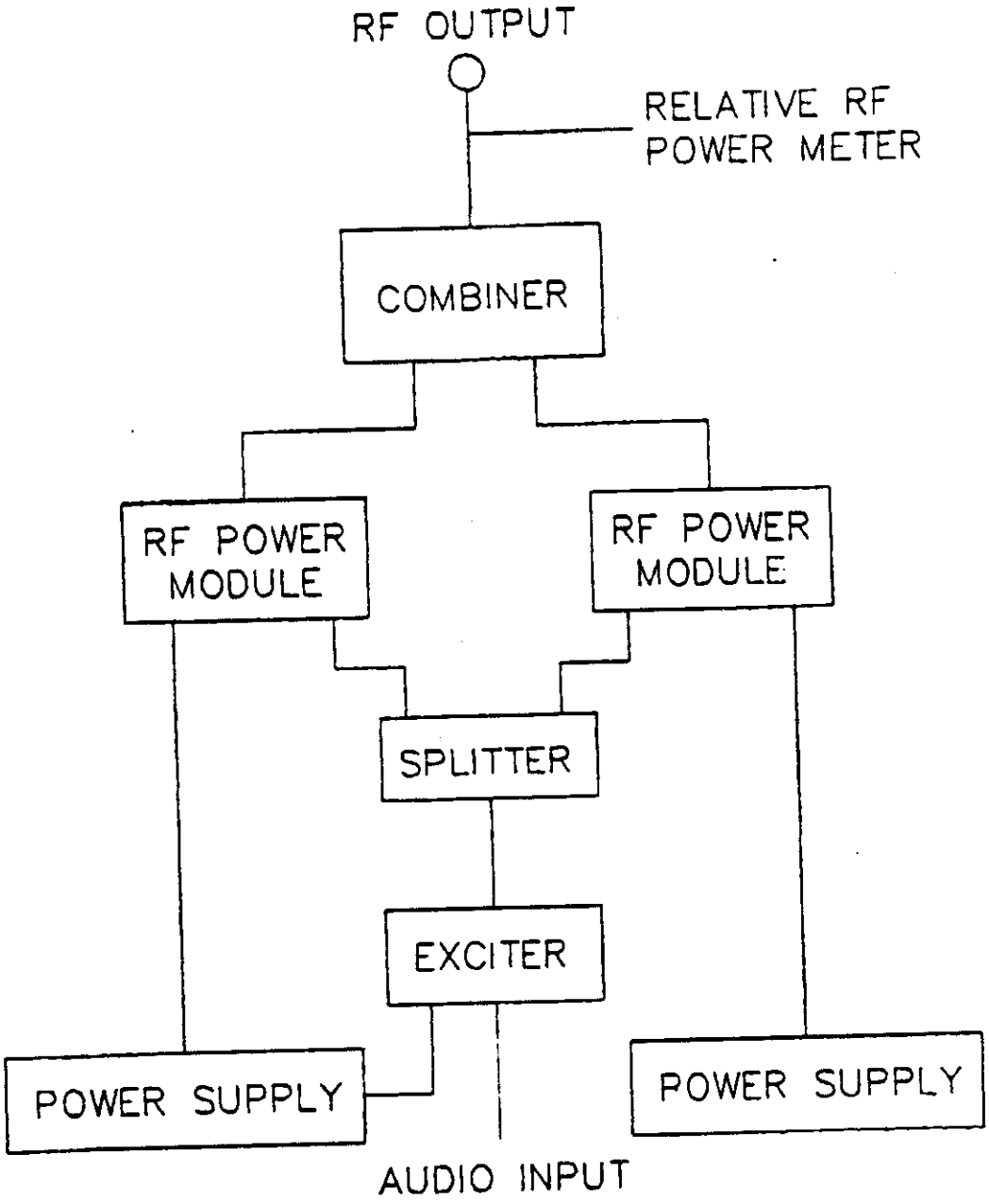

FIGURE #1

4.0 CIRCUIT DESCRIPTION

We do not recommend user repair of this equipment but furnish the following theory of operation information for those interested. It will assist in isolating a problem. Furthermore, refer to the troubleshooting guide in Section 7.0 and to the block diagrams and schematics in this manual.

4.1 Summary

(REFER TO TRANSMITTER BLOCK DIAGRAM, FIG. 1)

The transmitter uses an intergrated circuit technique to generate a high-stability signal at six times the carrier frequency. In addition, an adjustable frequency trim circuit allows the user to calibrate the transmitter frequency. A digital countdown circuit produces the carrier frequency which is then amplitude modulated at a low level. Two linear RF power amplifiers combined increase the output to full rated TPO. The linear RF amplifiers allow output power adjustment down to about 10 watts. The internal meter is used to measure Modulation and Relative RF Power Output. Note: According to the afore mentioned Docket, an RF ammeter should be used to measure power to the antenna.

4.2 Power Supply

(Refer to Fig. 2 and schematic)
(Parts List # 6015-A)

Each of the RF amplifiers in the AM-60P transmitter is supplied by its own power supply. The following circuit description is for a single power supply and applies to the other three:

The low voltage secondary of power transformer (T1) feeds a standard full-wave diode bridge (D1). Diode D2 and transistor Q1 provide regulation and ripple rejection. D3 provides half-wave rectification for the 15 vDC supply. Both primary AC and B+ voltages are fused (F2 & F3 located on the chassis). A metal oxide varistor V1 shunts the low voltage secondary of T1 to protect against damage from voltage transients.

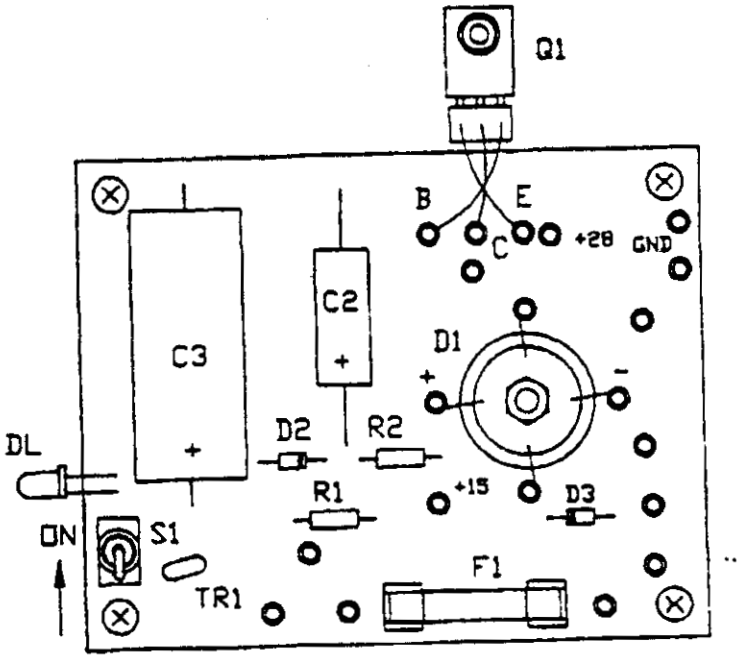

POWER SUPPLY
COMPONENT LAYOUT

FIG. 2

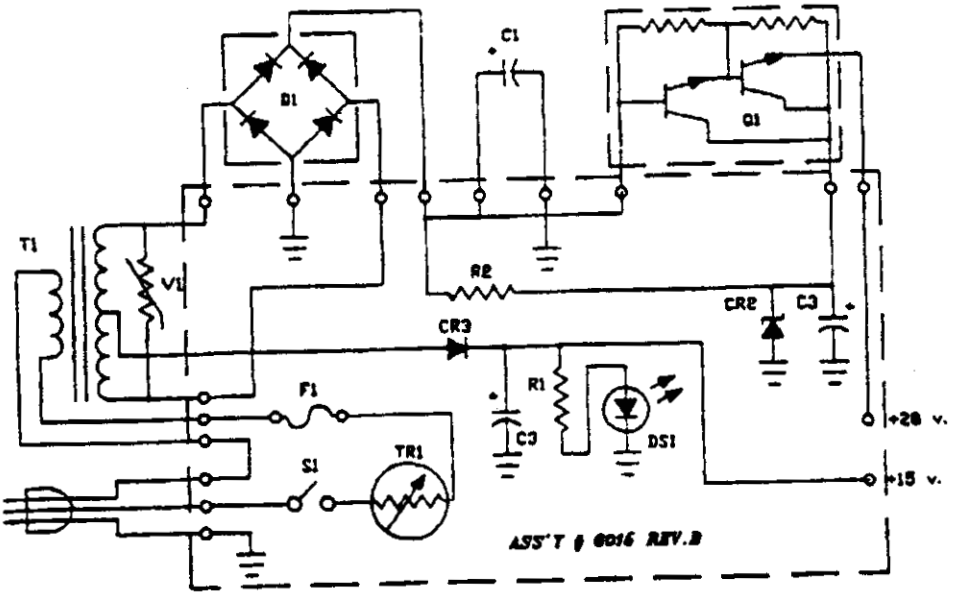

AM-30P/60P/100P POWER SUPPLY #6016 REV.B

4.3 Exciter ('F' version)

(Refer to Fig. 3 and schematic)
(Parts List # 6094-F and # 6010-F)

4.3.1 Audio

The audio section utilizes input transformer T2 to provide isolation and balanced 600 ohm line input. The transformer secondary drives an operational amplifier A1 in the inverting mode. This feeds an intergrated circuit balanced modulator A4 and the input of the meter amplifier A6. The meter is calibrated to indicate 0 VU at 100% modulation with a tone input (1 kHz standard) connected to the transmitter audio input.

Balanced modulation A4 provides a low level amplitude modulated signal. This output is square wave, rich in harmonics. DC voltage for the audio input stage, meter amplifier and modulator is provided from a sub-regulated power supply for high stability.

4.3.2 Oscillator

A precision crystal is used in the integrated circuit oscillator A2. It operates at six times the transmitter carrier frequency for maximum stability. A variable capacitor, in series with the crystal, enables adjustment of the oscillator frequency. This trim circuit will ensure accuracy at the fundamental frequency. The oscillator output drives a divide-by-six counter A3. This output is square wave at the carrier frequency and is applied to the modulator A4.

4.3.3 RF Pre-Driver and Driver Stages

Modulator A4 output drives the pre-driver amplifier consisting of an emitter follower Q2 which drives the power transistor Q3 operating Class A. The RF drive level control R31 in the pre-driver adjusts the output power of the transmitter. The driver amplifier provides input to the final power amplifiers.

NOTE: RESISTOR R14 IS MOUNTED ON BACK OF BOARD.

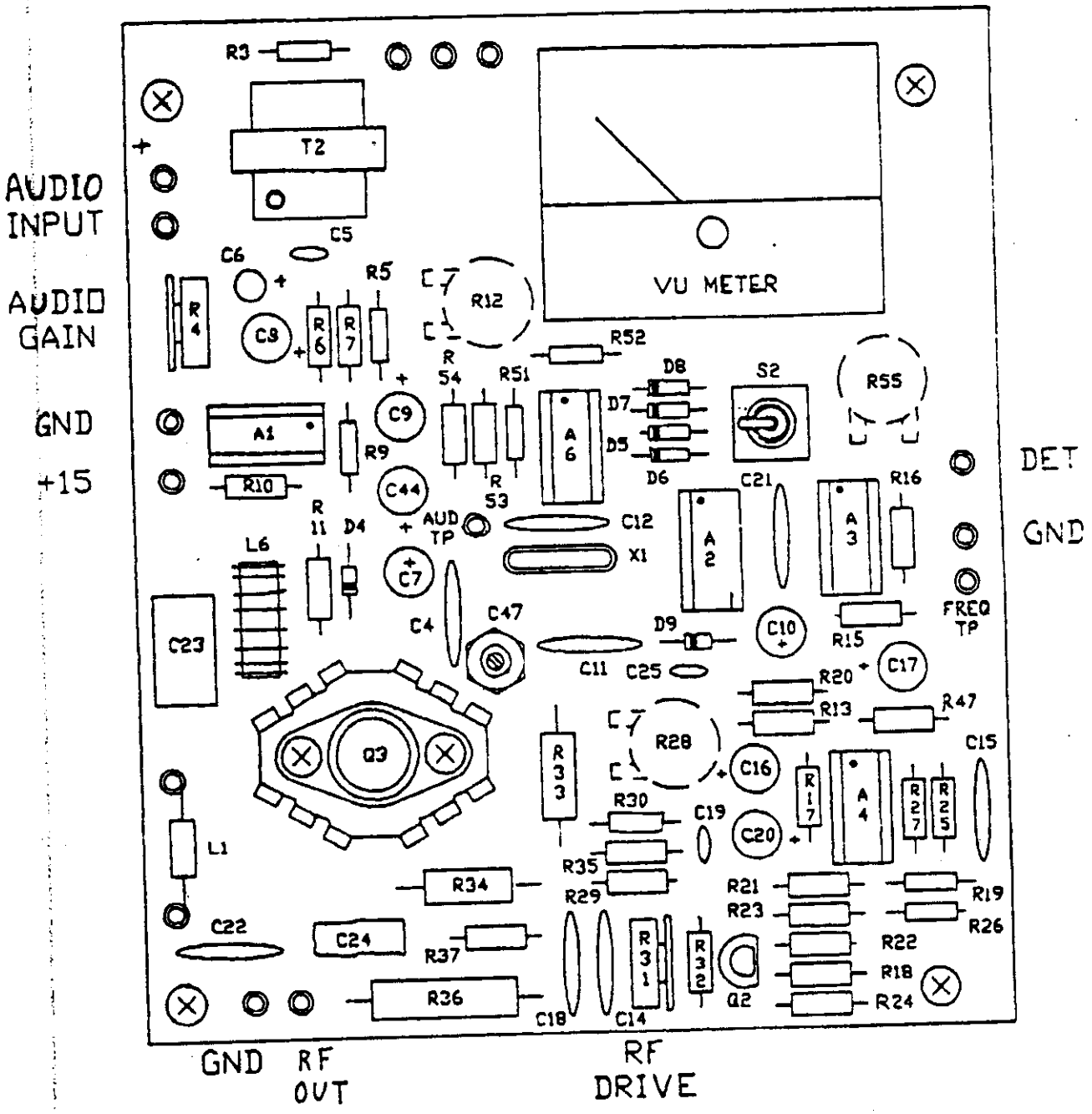

AM-30 P EXCITER COMPONENT LAYOUT

FIG. 3

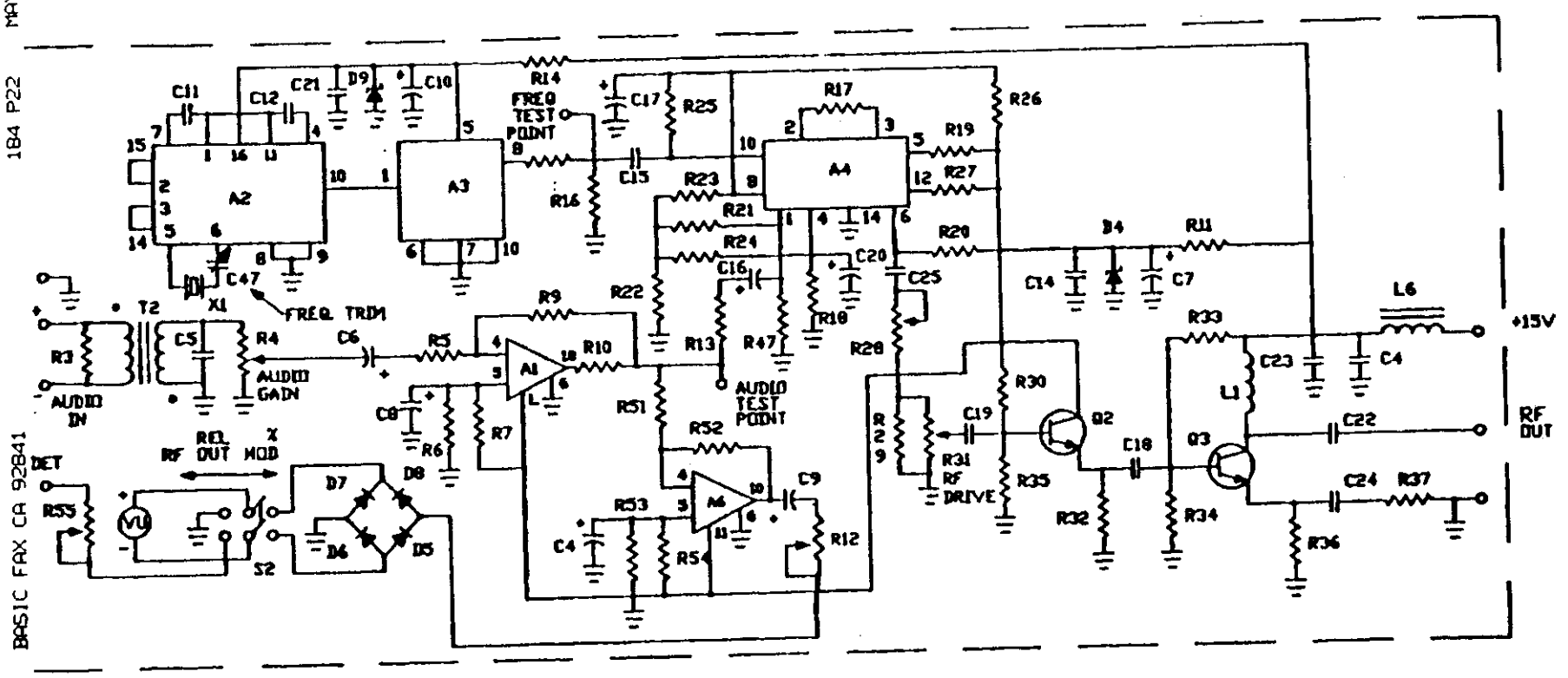

NOTES:

1. R12, R28, R55 are factory set.
2. REFER TO PARTS LIST # 6010 REV. F FOR COMPLETE LIST OF EXCITER COMPONENTS

'P' VERSION
EXCITER BOARD SCHEMATIC
AM-30P/60P/100P
DWG. 6094 REV. F

4.4 RF Power Amplifier

(Refer to RF Power Amplifier Fig. 4 and schematic)
(Parts List # 6005-A)

Note: Refer to Parts List # 6152-A for R38, R44, R45, R46, C36 and D11 component values and part numbers.

Again, like the power supply, there are two RF power amplifiers in the AM-60F. The following describes a single RF amplifier and applies to the others:

The final power amplifier utilizes a matched pair of balanced emitter transistors Q5 and Q6. Bias must be supplied for linear AM amplification. This operating bias is developed in a series regulated bias supply whose main components are A5 and Q4. Because the power amplifier is push-pull and the transistors are matched, a high degree of second harmonic rejection is automatically achieved. An elliptic function filter (C31 thru C35, L4 & L5) at the power amplifier output rejects higher order harmonics. The output of each RF amplifier is then fed to a conventional torriodal power combiner.

The elliptic filter is designed to operate over one-third (1/3) of the 530 kHz to 1610 kHz AM band. Sectioning the band with different filters is necessary because of of the width of the band. For example: the second harmonic of 530 kHz falls within the band at 1060 kHz, and the third harmonic at 1590 kHz is also within the band. The low-band filter covers 530 kHz to 830 kHz, mid-band 840 kHz to 1270 kHz and high-band 1280 kHz to 1610 kHz.

Transmitter RF output is sampled at the combiner output to present Relative RF Output on the VU meter with the switch (S2), on the exciter, in the REL RF OUT position.

Any field change of frequency will be restricted to the operating range of the filters. For example: a 640 kHz transmitter can be changed to operate on 710 kHz by simply changing the crystal, but it cannot be operated above 830 kHz without first being returned to the factory for new elliptic output filters and adjustment of the power amplifiers.

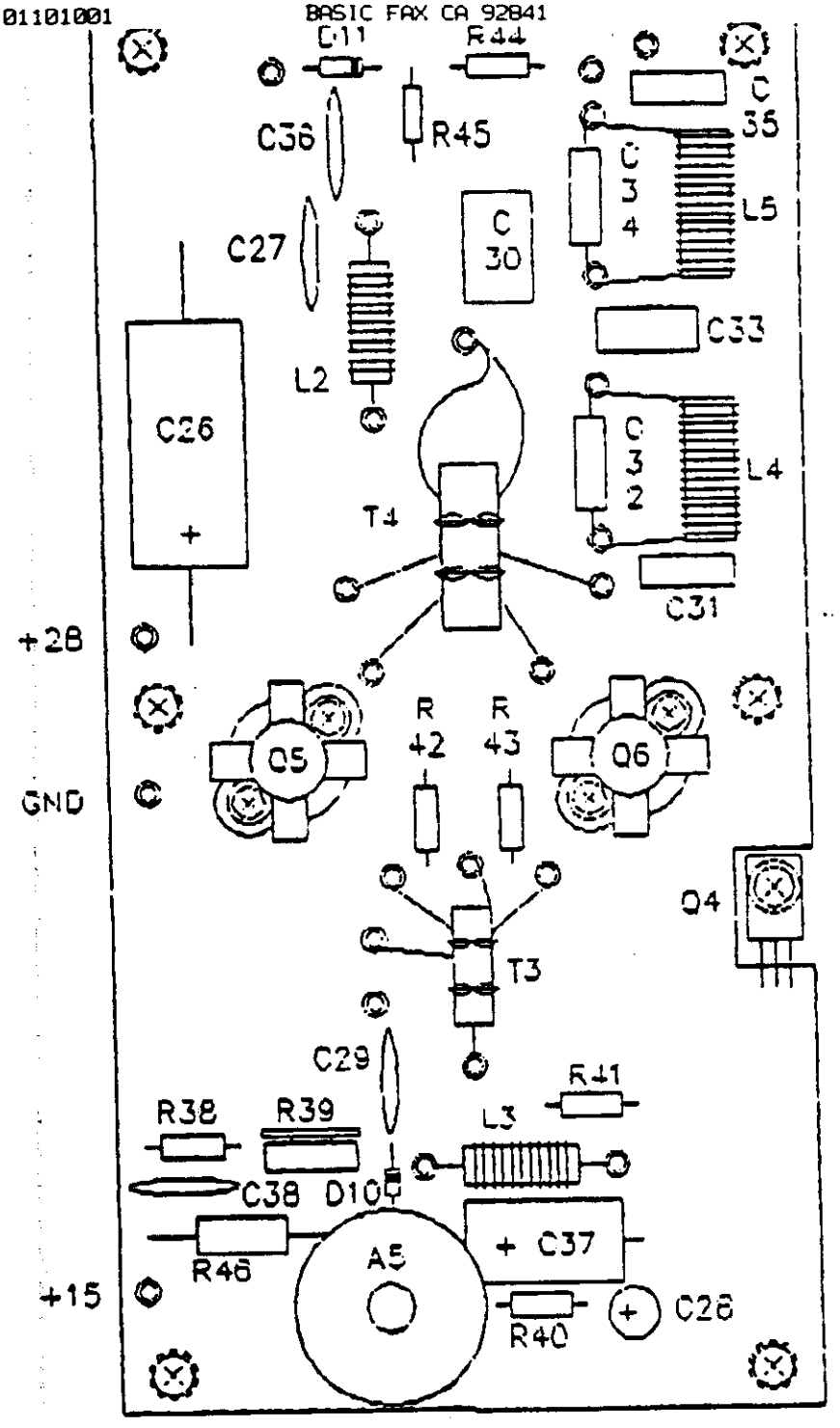

RF POWER AMP
COMPONENT LAYOUT

FIG. 4

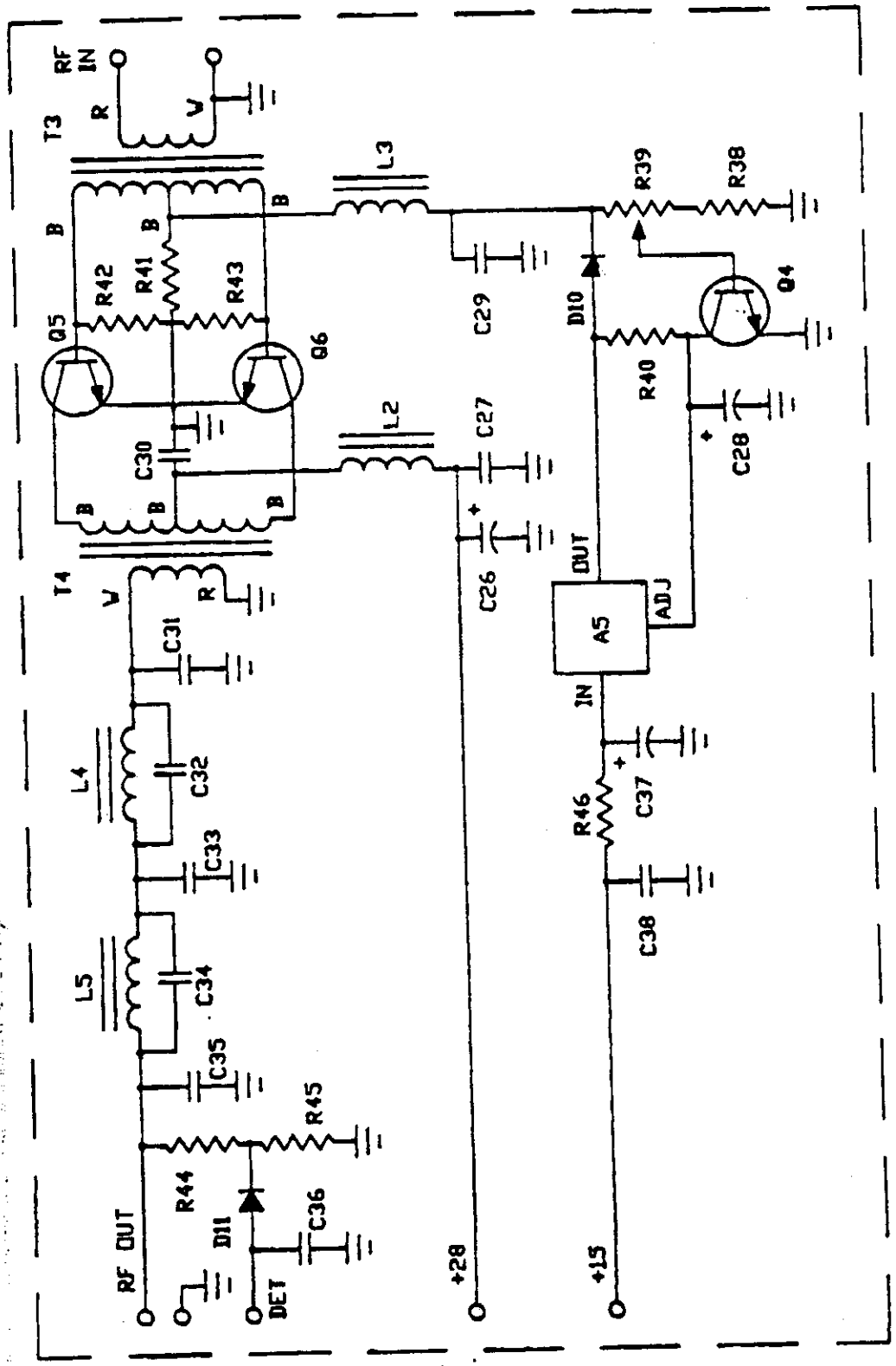

AM-30P/60P/100P
RF POWER AMP MODULE RFA-30 SCHEMATIC
Dwg. No. 6006 REV. A

5.0 INSTALLATION

5.1 Location and Mounting

Select a location which will provide several inches of clearance on all sides of the transmitter. Clearance around the heatsinks is especially important. Do not block the vent holes on the top and bottom of the chassis. Do not shelf-mount the transmitter, as this will block the vent holes and interrupt the air circulation.

Do not mount the transmitter to an electrically conductive surface. We recommend a wood or similar backboard.

Holes are provided in the rear of the chassis for six (6) screws to mount the transmitter to a vertical surface. Screws, #10 x 5/8", are supplied for the key type mounting holes and #8 x 1/2" for the lower hole. Refer to Fig. 7 for proper mounting.

5.2 Interfacing the Transmitter

AC power: The transmitter requires a standard 117 vAC, 50/60 Hz. outlet. A 6 foot, 3 conductor line cord with 3 pin AC plug is supplied. If an RF ground loop is encountered between the station ground and the AC power system ground, use a 3-to-2 prong plug adapter on the transmitter AC line cord. **DO NOT REMOVE GROUND PIN FROM PLUG.**

AUDIO: The audio input impedance is 600 ohm transformer balanced. Any input level between -15 dBm and +15 dBm (0.14 Vrms to 4.3 Vrms) will provide 100% modulation (with the Audio Gain control R4 properly set). Connect the audio feed line to the AUDIO IN terminal block located on the bottom of the transmitter chassis. (see Fig. 8)

RF Output: The RF output impedance is industry-standard 50 ohms, unbalanced, using an SO-239 UHF type connector (see Fig. 8). The RF output cable must be 50 ohm coaxial. Type RG-8/U is recommended.

6.0 CONTROL SETTINGS AND OPERATION

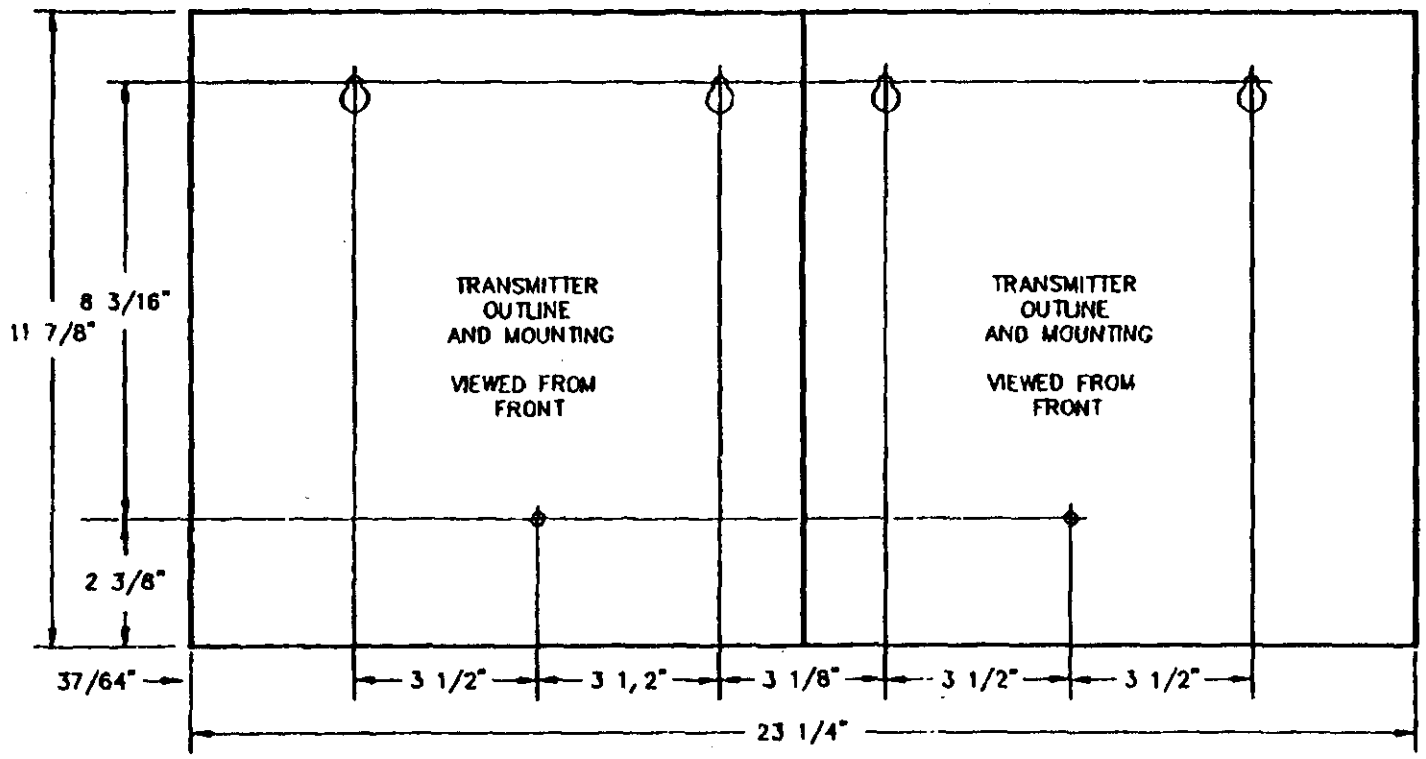

TRANSMITTER MOUNTING DIMENSIONS

FIGURE 7

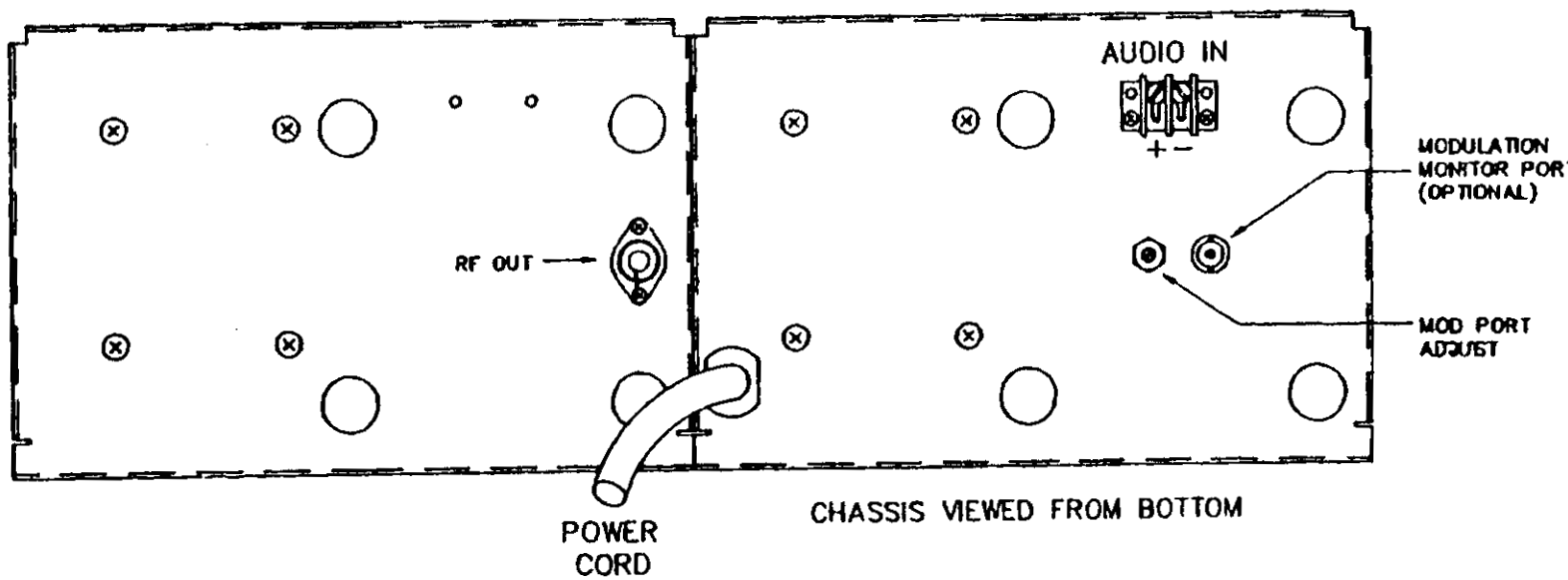

TRANSMITTER CONNECTIONS
FIGURE 8

6.1 User Control Descriptions and Locations

A number of trimpots are located inside the transmitter. Some are factory set and sealed. Removing any of the seals will void the warranty.

User adjustable controls include:

Power Switch (S1) located on the power supply board, same chassis section as the exciter board. The red LED, on each power supply will be on when power is applied.

Meter Switch (S2) located below the meter on the exciter board. This switch selects the function of the meter to indicate Relative RF Power Output or Percent Modulation.

Audio Gain (R4) located on the upper left corner of the exciter. This adjusts the audio gain of the transmitter to provide 100% modulation for any audio input level between -15 dBm and +15 dBm.

RF Drive (R31) located lower center of exciter board. This control adjusts the RF drive to each of the final power amplifiers simultaneously for the desired RF output power between 20% and 100% of rated TPO.

Frequency Trim (C47) located just below the crystal on the exciter board. If frequency drift is encountered, this variable capacitor enables adjustment of the operating frequency.

6.2 Setup and Operation

Refer to section 6.1 of this manual and the operating instructions located on the inside of the transmitter front panel. With power switch (S1) off (down position) make sure RF Drive level (R31) and Audio Gain (R4) are at MINIMUM (full counter-clockwise).

1. Be sure all connections to and from the transmitter are secure.
2. Turn transmitter power switch on.
3. Place Meter Function Switch in the Relative RF Output position (REL RF OUT).

4. Set RF Drive control (R31) for the minimum power required for the application. This may be measured using the Relative RF Output Meter. This meter reads RF output voltage referenced to 100% TPO. To convert the meter reading to power out in watts use the following equation:

$$(\text{METER READING} / 100)^2 \times \text{RATED TPO} = \text{WATTS (APPROX.)}$$

Example: Meter reads 70, TPO = 30 watts

$$(70 / 100)^2 \times 30 = 14.7 \text{ watts}$$

NOTE: As mentioned before, this method is not accepted by the FCC and is to be used as an initial reference only. Use of an RF Ammeter to measure the output to the antenna is required.

6. Apply program material (audio source) to transmitter. Set Meter Function Switch to percent modulation position (% MOD).
7. Adjust Audio Gain Control (R4) as follows:

   a. Set gain so that meter reads no higher than 50% during loudest program material peaks.

NOTE: Modulation can also be set using an oscilloscope by connecting the scope probe across the RF output. Adjust the Audio Gain (R4) so that the negative modulation peaks are just beginning to pinch off the carrier, then back off R4 slightly. At a short distance from the transmitter, use any AM radio to listen for distortion and check the quality of the audio. Placing the radio close to the transmitter may cause input overloading to the radio and result in a misleading interpretation of signal quality.

7.0 MONITORING AND REMOTE CONTROL

Additions such as a modulation port and remote adjustment of power output are specialized to the individual needs of the user. These options are available from LPB on special order. The user may also easily add these options.

7.1 Modulation Monitoring

Common modulation monitors include:

mfgr & model	input, ohms	input, Vrms	recommended input, Vrms
Belar AMM-2	1k standard (50 ohm opt)	5 to 10	5.5
Belar AMM-3	1k standard (50 ohm opt)	5 to 10	5.5
TFT 753	50 ohm	1 to 10	5.5

Ther are many ways to accomplish the voltage division required at the transmitter output to drive the modulation monitor input. A resistive divider consumes excessive power for a low power transmitter and requires non-inductive resistors. A bridging transformer is difficult because it requires an impractical number of turns. A capacitive divider seems to be the most practical approach (see Fig. 9).

Capacitor C_m can be calculated from:

$$C_m = \frac{3.18 \times 10^{-3}}{f\,[(E_o/E_m)^2 - 1]^{1/2}} \text{ in pfd.} \qquad f = \text{operating frequency in Hz.}$$

The power drawn from the transmitter by the modulation monitor is:

$$P_m = \frac{(E_m)^2}{50} \text{ in watts} \qquad \text{(Note: } P_m \text{ will be below 1 watt)}$$

7.2 LPB Tri-Power Option

If the transmitter is equipped with this option, a two screw terminal block and a wing nut will be found on the bottom of the chassis. These connection points are labeled "A", "B" and "Gnd". Grounding the "A" terminal will cause the transmitter to operate at its lowest factory-set TPO. Grounding the "B" terminal will cause the transmitter to operate at its mid factory-set TPO. With both the "A" and "B" terminals grounded, the transmitter will operate at *maximum factory-set* TPO. (refer to figures 10 & 11).

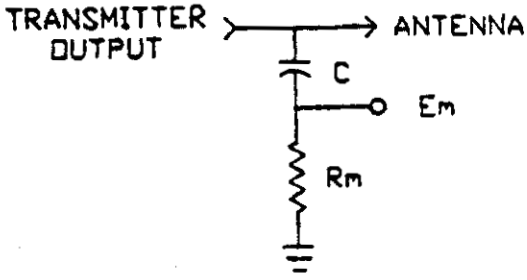

Eo: Transmitter output, 10 to 38.7 Vrms (2 to 30w, 50 ohms)

C: Depends on Eo, to be calculated

Em: Modulation monitor input (use 5.5 Vrms)

Rm: 50 ohms, either a 2 watt metal oxide resistor or the modulation monitor input (when 50 ohms)

CAPACITIVE DIVIDER

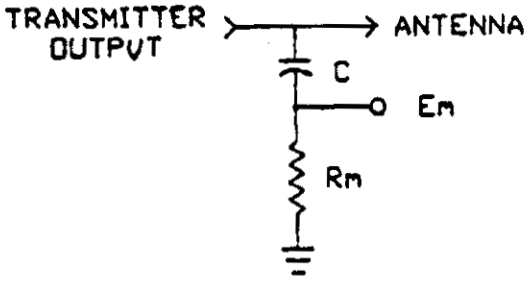

Eo = 25\ rms

f = 1260kHz

Em = 5.5Vrms

C = 570pf

Pm = 0.61w

EXAMPLE OF A CAPACITIVE DIVIDER

FIG. 9

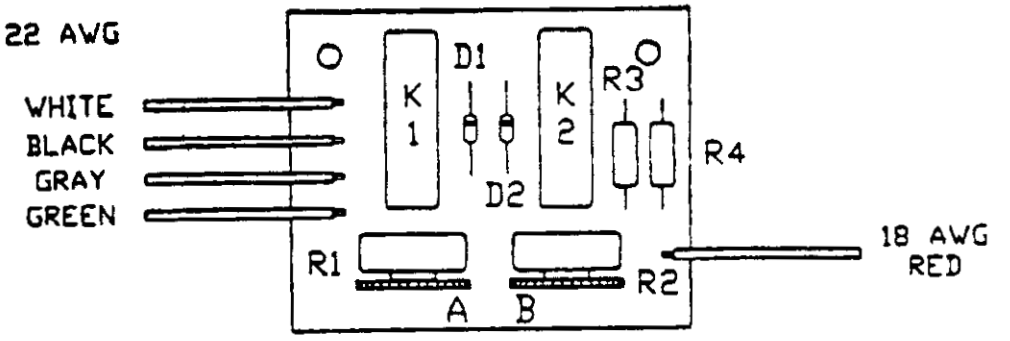

TRI-POWER OPTION
BOARD COMP. LAYOUT

FIG. 10

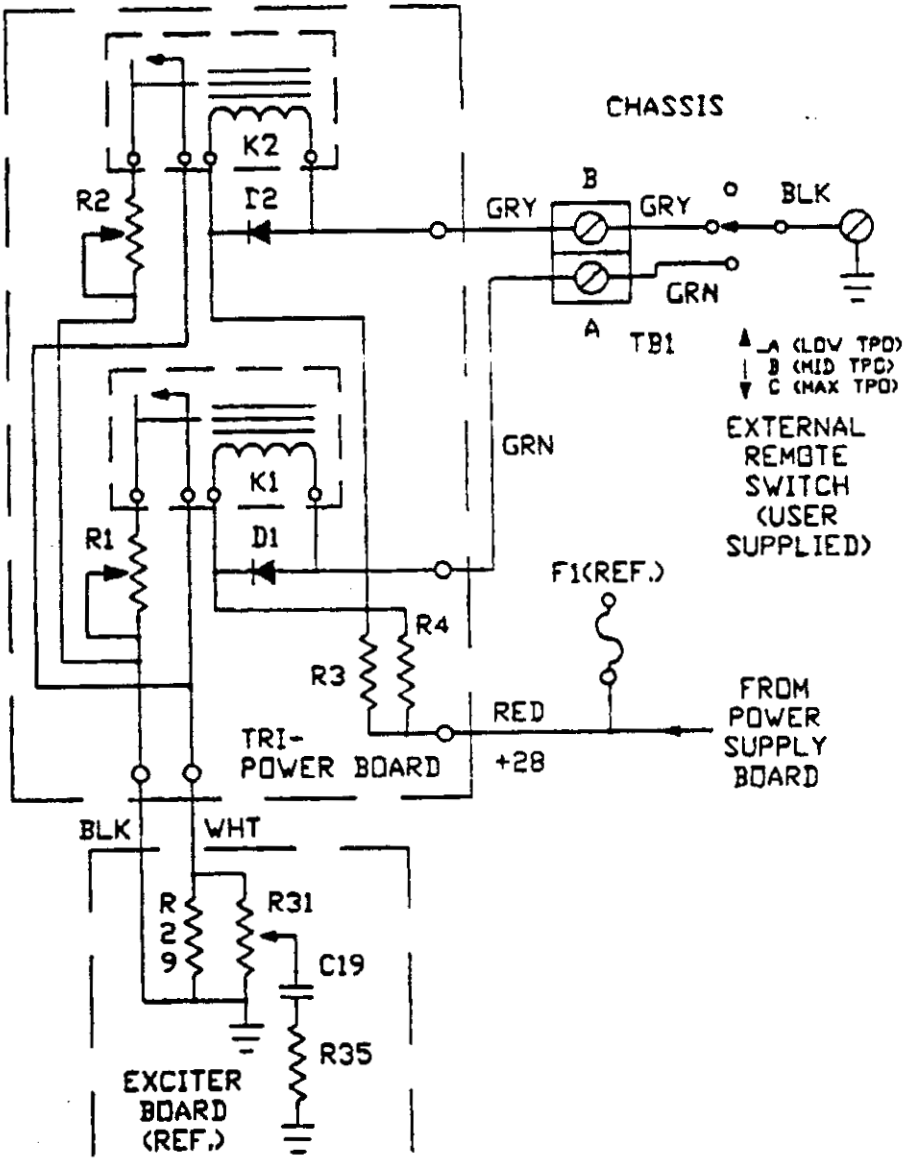

TRI-POWER OPTION
SCHEMATIC

FIG. 11

A single pole, three position switch (SPTT) is all that is needed to select the desired TPO. This external switch must be capable of switching 10 mA. at 28 vDC. A two conductor cable with shield is connected between the terminal block and switch. It should be noted that the RF drive control (R31) on the exciter board carries RF, NOT DC. Therefore, it cannot be placed at any distance from the exciter board.

8.0 BASIC TROUBLESHOOTING GUIDE

Problem	Possible Cause
LED power indicator does not light.	No power on AC receptacle F1 blown.
No RF output indication.	Fuse F1 and/or F2 blown. Shorted output cable. Drive control (R31) set to minimum. Crystal not seated properly. Meter Switch (S2) in % MOD position. Defective oscillator chip A2. Defective Divide-by-six chip A3. Defective Modulator chip A4.
RF output reads off scale when drive control (R31) is advanced.	Open RF output cable. Bad match to load.
Fuse F2 blows after a short period of operation.	Output badly mismatched.
No modulation indication with RF output OK (unmodulated carrier is heard on a monitor).	Audio input cable not connected or bad. Audio gain control (R4) set at minimum. No audio from source.
Audio distortion heard on radio receiver.	Audio gain control set too high. Receiver too close to transmitter. If limiter installed, limiter control misadjusted.
Hum heard on radio receiver.	Defective audio source or audio feed line.

9.0 MAINTENANCE

These transmitters are designed for continuous 24-hour service. Periodic checks of the transmitter and associated equipment are recommended to catch any problems that may rise.

10.0 PARTS LIST AND SCHEMATIC

Following this section is a complete set of parts lists and schematics. Refer to these lists for component values and LPB part numbers.