L P B P A R T S L I S T

RF POWER AMPLIFIER MODULE

ASSY NO. 6005-A
PAGE 1
DATE 2/20/90
SUPERCEDES 7/25/89

SYMBOL	QTY	DESCRIPTION	PART	NOTES
1	1	AM-30/60/100,RF POWER AMP.PCB.	671-6008-A	
R39	1	1K OHM TRIMPOT.VERT MNT,THMBWHL ADJ	775-1080	
R40	1	680 OHM,1/2W.5% RESISTOR,CARB FILM	762-2117	
R41	1	4.7 OHM.1/2W.5% RESISTOR.CARB FILM	762-2065	
R42	1	22 OHM,1/2W.5% RESISTOR.CARB FILM	762-2081	
R43	1	22 OHM.1/2W.5% RESISTOR.CARB FILM	762-2081	
C26	1	2200 MFD AL CAP AXL 35V -10/+50 %	172-2197	
C27	1	.1 MFD CER DISC CAP 50V	174-1254	
C28	1	22 MFD AL CAP RAD 63V +/-20 %	172-1067	
C29	1	.1 MFD CER DISC CAP 50V	174-1254	
C30	1	.33 MFD MYLAR CAP 100V 10%	175-1091	
C37	1	470 MFD AL CAP AXL 50V -10/+50 %	172-2153	
C38	1	.1 MFD CER DISC CAP 50V	174-1254	
A3	1	LM317H ADJ VOLT REG IC (TO-5)	362-1001	
D16	1	1N4007-1000V,1A SILICON RECTIFIER	781-1037	
Q4	1	2N5190 NPN SIL PWR TRANSISTOR,PLAS	782-1105	1
Q5	1	SD-1407 NPN RF PWR XSTR.28V.HI-GAIN	782-1211	1
Q6	1	SD-1407 NPN RF PWR XSTR.28V.HI-GAIN	782-1211	1
L2	1	0.75" FERRITE TOROID	201-1005	2
L3	1	0.75" FERRITE TOROID	201-1005	2
T3	1	0.75" FERRITE TOROID	201-1005	3
T1	1	1.1 " FERRITE TOROID	201-1006	4
2	1	AM-30 RFA HEATSINK	333-6035-A	
3	1	TO-5 PRESS-ON HEATSINK	332-1005	
4	5	4-40 X 3/8" PAN HD SCREW PHILLIPS	301-1108	
5	6	6-32 X 1/2" PAN HD SCREW PHILLIPS	301-1212	
6	6	#6 EXTERNAL TOOTH LOCKWASHER	303-1010	
7	6	10-24 HEX NUT W/LOCKWASHER (KEPS)	302-6020	
9	4	#4 EXTERNAL TOOTH LOCKWASHER	303-1005	
10	1	#4 COMPRESSION WASHER	789-1021	
11	1	MICA INSULATOR,.5" X .85"	789-1016	1
	15	18 AWG PVC HOOK-UP WIRE,RED	931-1022	5
	17	18 AWG PVC HOOK-UP WIRE,BLACK	931-1021	5
	15	18 AWG PVC HOOK-UP WIRE,WHITE	931-1020	5
	12	22 AWG PVC HOOK-UP WIRE,RED	931-1003	5
	14	22 AWG PVC HOOK-UP WIRE,BLACK	931-1002	5
	12	22 AWG PVC HOOK-UP WIRE,WHITE	931-1001	5
C31	1		-	6
C32	1		-	7
C33	1		-	8
C34	1		-	9
C35	1		-	10
L4	1		-	11
L5	1		-	12

CONTINUED ON PAGE 2

L P B PARTS LIST

RF POWER AMPLIFIER MODULE

ASSY NO. 6005-A
PAGE 2
DATE 2/20/90
SUPERCEDES 7/25/89

NOTES:

1. USE A THIN COAT OF THERMAL HEATSINK COMPOUND BETWEEN COMPONENT AND HEATSINK - SCRAPE PAINT IN REQUIRED.
2. 52 UH FERRITE CORE COIL TOROIDAL - SEE SCD #184-1005
3. RF TOROIDAL TRANSFORMER INPUT TRIFILAR - SEE SCD #865-1005
4. RF TOROIDAL TRANSFORMER OUTPUT TRIFILAR - SEE SCD #865-1010
5. QUANTITY EQUALS LENGTH IN INCHES.
6. FILTER COMPONENT VALUES VS. FREQUENCY RANGE:

		LOW BAND	MID-BAND	HIGH-BAND
	C31	3600PF (171-1218)	2400PF (171-1202)	2000PF (171-1197)
7.	C32	1000PF (171-1176)	680PF (171-1164)	220PF (171-1120)
8.	C33	5600PF (171-1236)	3600PF (171-1218)	3300PF (171-1215)
9.	C34	3300PF (171-1215)	1200PF (171-1200)	750PF (171-1187)
10.	C35	2200PF (171-1200)	1500PF (171-1188)	1600PF (171-1191)
11.	L4	7.3uH SCD #184-1032	5.1uH SCD #184-1023	5.5uH SCD #184-1021
12.	L3	3.8uH SCD #184-1024	3.2uH SCD #184-1018	4.0uH SCD #184-1019

L F B P A R T S L I S T

AM-30/60/100 EXCITER BOARD ASSEMBLY

ASSY NO. 6010-F
PAGE 1
DATE 2/20/90
SUPERCEDES 11/21/88

SYMBOL	QTY	DESCRIPTION	PART	NOTES
1	1	AM-30/60/100, EXCITER PCB.	671-6013-A	
R3	1	620 OHM,1/2W,5% RESISTOR,CARB FILM	762-2116	
R4	1	10K OHM TRIMPOT,VERT MNT,THMWHL ADJ	775-1130	
R5	1	10K OHM,1/2W,5% RESISTOR,CARB FILM	762-2145	
R6	1	47K OHM,1/2W,5% RESISTOR,CARB FILM	762-2161	
R7	1	47K OHM,1/2W,5% RESISTOR,CARB FILM	762-2161	
R9	1	100K OHM,1/2W,5% RESISTOR,CARB FILM	762-2169	
R10	1	100 OHM,1/2W,5% RESISTOR,CARB FILM	762-2097	
R11	1	100 OHM,1/2W,5% RESISTOR,CARB FILM	762-2097	
R12	1	1K OHM TRIMPOT,HORZ MNT,SCRDR ADJ	775-1085	1
R13	1	1.8K OHM,1/2W,5% RESISTOR,CARB FILM	762-2127	
R14	1	100 OHM, 2W,5% RESISTOR,MET OXIDE	763-4077	2
R15	1	620 OHM,1/2W,5% RESISTOR,CARB FILM	762-2119	
R16	1	1K OHM,1/2W,5% RESISTOR,CARB FILM	762-2121	
R17	1	1K OHM,1/2W,5% RESISTOR,CARB FILM	762-2121	
R18	1	1.8K OHM,1/2W,5% RESISTOR,CARB FILM	762-2127	
R19	1	10K OHM,1/2W,5% RESISTOR,CARB FILM	762-2145	
R20	1	3K OHM,1/2W,5% RESISTOR,CARB FILM	762-2132	
R21	1	100 OHM,1/2W,5% RESISTOR,CARB FILM	762-2097	
R22	1	1K OHM,1/2W,5% RESISTOR,CARB FILM	762-2121	
R23	1	620 OHM,1/2W,5% RESISTOR,CARB FILM	762-2119	
R24	1	100 OHM,1/2W,5% RESISTOR,CARB FILM	762-2097	
R25	1	47 OHM,1/2W,5% RESISTOR,CARB FILM	762-2089	
R26	1	1.3K OHM,1/2W,5% RESISTOR,CARB FILM	762-2124	
R27	1	3K OHM,1/2W,5% RESISTOR,CARB FILM	762-2132	
R28	1	10K OHM TRIMPOT,HORZ MNT,THMWHL ADJ	775-1135	1
R29	1	2.2K OHM,1/2W,5% RESISTOR,CARB FILM	762-2129	
R30	1	100K OHM,1/2W,5% RESISTOR,CARB FILM	762-2169	
R31	1	10K OHM TRIMPOT,VERT MNT,THMWHL ADJ	775-1130	
R32	1	300 OHM,1/2W,5% RESISTOR,CARB FILM	762-2108	
R33	1	1K OHM, 2W,5% RESISTOR,MET OXIDE	763-4121	2
R34	1	1K OHM, 2W,5% RESISTOR,MET OXIDE	763-4121	2
R35	1	220K OHM,1/2W,5% RESISTOR,CARB FILM	762-2177	
R36	1	50 OHM, 5W, 5% RESISTOR,WIREWND	765-1247	2
R37	1	3.3 OHM,1/2W,5% RESISTOR,CARB FILM	762-2061	
R47	1	47K OHM,1/2W,5% RESISTOR,CARB FILM	762-2161	
R51	1	10K OHM,1/2W,5% RESISTOR,CARB FILM	762-2145	
R52	1	22K OHM,1/2W,5% RESISTOR,CARB FILM	762-2153	
R53	1	47K OHM,1/2W,5% RESISTOR,CARB FILM	762-2161	
R54	1	47K OHM,1/2W,5% RESISTOR,CARB FILM	762-2161	
R55	1	1K OHM TRIMPOT,HORZ MNT,SCRDR ADJ	775-1085	1
C4	1	.1 MFD CER DISC CAP 50V	174-1254	
C5	1	.001 MFD CER DISC CAP 1000V	174-1153	
C6	1	1.0 MFD AL CAP RAD 50V -10/+75 %	172-1007	
C7	1	100 MFD AL CAP RAD 25V -10/+50 %	172-1117	
C8	1	100 MFD AL CAP RAD 25V -10/+50 %	172-1117	

CONTINUED ON PAGE 2

L P B P A R T S L I S T

AM-30/60/100 EXCITER BOARD ASSEMBLY

ASSY NO. 6010-F
PAGE 2
DATE 2/20/90
SUPERCEDES 11/21/88

SYMBOL	QTY	DESCRIPTION	PART	NOTES
C9	1	100 MFD AL CAP RAD 25V -10/+50 %	172-1117	
C10	1	100 MFD AL CAP RAD 25V -10/+50 %	172-1117	
C11	1	.1 MFD CER DISC CAP 50V	174-1254	
C12	1	.1 MFD CER DISC CAP 50V	174-1254	
C14	1	.1 MFD CER DISC CAP 50V	174-1254	
C15	1	.1 MFD CER DISC CAP 50V	174-1254	
C16	1	100MFD TANT CAP RAD 20V	173-1094	
C17	1	100 MFD AL CAP RAD 25V -10/+50 %	172-1117	
C18	1	.1 MFD CER DISC CAP 50V	174-1254	
C19	1	.001 MFD CER DISC CAP 1000V	174-1155	
C20	1	100MFD TANT CAP RAD 20V	173-1094	
C21	1	.1 MFD CER DISC CAP 50V	174-1254	
C22	1	.1 MFD CER DISC CAP 50V	174-1254	
C23	1	.33 MFD MYLAR CAP 100V 10%	175-1091	
C24	1	.15 MFD MYLAR CAP 100V 10%	175-1079	
C25	1	.001 MFD CER DISC CAP 1000V	174-1155	
C44	1	100 MFD AL CAP RAD 25V -10/+50 %	172-1117	
A1	1	RM741DC LINEAR IC (14 PIN DIP)	361-1013	
A2	1	MC1208LP DIGITAL IC (16 PIN DIP)	364-1002	
A3	1	LM74S20 DIGITAL IC (14 PIN DIP)	364-1001	
A4	1	MC1496P LINEAR IC (14 PIN DIP)	361-1023	
A6	1	RM741DC LINEAR IC (14 PIN DIP)	361-1013	
D4	1	1N4742A-12V,1W,5% ZENER DIODE	781-1072	
D5	1	1N270 GERMANIUM SIGNAL DIODE	781-1015	
D6	1	1N270 GERMANIUM SIGNAL DIODE	781-1015	
D7	1	1N270 GERMANIUM SIGNAL DIODE	781-1015	
D8	1	1N270 GERMANIUM SIGNAL DIODE	781-1015	
D9	1	1N4733A-5.1V,1W,5% ZENER DIODE	781-1063	
T2	1	600:600 LINE IN XFR BOBBIN LPB-81C	863-1075	
L1	1	330UH FERRITE CORE COIL-MOLDED	184-1330	
L6	1	0.73" FERRITE TOROID	201-1005	3
2	14	20 AWG MAGNET WIRE,NYLEZE,RED	939-1013	4
S2	1	DPDT MIN TOGGLE SWITCH,PC MOUNT	821-1013	
Q2	1	2N3904 NPN SIL SIG TRANSISTOR,TO-92	782-1072	
Q3	1	2N3879 NPN SIL PWR TRANSISTOR,TO-66	782-1069	5
X1	1		—	6
3	1	XTAL SOCK .5" CTR PLASTIC PC MOUNT	216-1002	
4	1	1.3"VU METER B SCALE (DC TYPE)	541-1001	
5	1	20 AWG TINNED COPPER BUS WIRE	935-1016	4
6	1	TRANSISTOR SOCKET,3 PIN,TO-5,NYLON	789-1001	
7	1	TO-66 PC BOARD MNT HEATSINK 1.25"H	331-1012	
8	3	14 PIN IC SOCKET RECESSED	365-1003	
9	1	14 PIN HEADER SOCKET	365-1010	
10	1	16 PIN IC SOCKET RECESSED	365-1005	
11	2	6-32 X 3/8" PAN HD SCREW PHILLIPS	301-1208	
12	2	4-40 HEX NUT	302-1005	

CONTINUED ON PAGE 3

L P B P A R T S L I S T

AM-30/60/100 EXCITER BOARD ASSEMBLY

ASSY NO. 6010-F
PAGE 3
DATE 2/20/90
SUPERCEDES 11/21/88

SYMBOL	QTY	DESCRIPTION	PART	NOTES
14	2	6-32 HEX NUT W/LOCKWASHER (KEPS)	302-6018	
15	2	19 AWG TINNED COPPER BUS WIRE	936-1017	4
16	1	20 AWG PVC TUBING,CLEAR	936-1003	4

NOTES:

1. MOUNT ON BOTTOM OF PC BOARD.
2. MOUNT SO BODY OF COMPONENT IS 1/8" TO 3/16" ABOVE BOARD.
3. 52 UH FERRITE CORE COIL TOROIDAL - SEE SCD #184-1005
4. QUANTITY EQUALS LENGTH IN INCHES.
5. USE A THIN COAT OF THERMAL HEATSINK COMPOUND BETWEEN COMPONENT AND HEATSINK - SCRAPE PAINT IN REQUIRED.
6. 6X CRYSTAL, STANDARD TOLERANCE. 10 KHZ SPACING (212-XXXX)

L P B PARTS LIST

AM-30 POWER SUPPLY ASSEMBLY

ASSY NO. 6015-A
PAGE 1
DATE 2/20/90
SUPERCEDES 11/23/88

SYMBOL	QTY	DESCRIPTION	PART	NOTES
1	1	AM-30/60/100,POWER SUPPLY PCB.	671-6018-B	
R1	1	1K OHM,1/2W,5% RESISTOR,CARB FILM	762-2121	
R2	1	390 OHM,1/2W,5% RESISTOR,CARB FILM	762-2111	
D2	1	1N4731A-30V,1W,5% ZENER DIODE	781-1081	
D3	1	1N4007-1000V,1A SILICON RECTIFIER	781-1037	
DL	1	LED T-1-3/4 -RED	473-1006	
C2	1	220 MFD AL CAP AXL 30V -10/+50 %	172-2132	
C3	1	6800 MFD AL CAP AXL 25V -10/+50 %	172-2238	
	1	QUICK FIT FUSE COVER	699-1020	
F1	1	2-1/2 AMP,250V,SLO-BLO FUSE	691-1017	
TR1	1	2 AMP INRUSH CURRENT SUPPRESSOR	696-1002	
2	2	PC MOUNT FUSE CLIPS	699-1001	

L P B P A R T S L I S T

AM-30 CHASSIS ASSEMBLY

ASSY NO. 6020-A
PAGE 1
DATE 2/20/90
SUPERCEDES 11/21/88

SYMBOL	QTY	DESCRIPTION	PART	NOTES
1	1	RF CHASSIS	521-6036-C	
C1	1	9600 MFD AL CAP CAN 50V	172-3040	
V1	1	40VAC, 400A PEAK,MET-OX-VARISTOR	695-1020	
T1	1	56V 2A PWR XFMR CH MNT 36-2	861-1065	
2	1	MOUNTING BRACKET FOR 172-3040	172-3043	
	1	18 AWG 3-COND POWER CORD,GRAY VINYL	939-1003	
4	3	6-32 X 3/8" PAN HD SCREW PHILLIPS	301-1208	
5	1	6-32 X 5/8" PAN HD SCREW PHILLIPS	301-1214	
6	4	10-32 X 1/2" PAN HD SCREW PHILLIPS	301-1512	
8	4	6-32 HEX NUT W/LOCKWASHER (KEPS)	302-6018	
9	4	10-32 HEX NUT	302-1020	
F1	1	CHASSIS MOUNT FUSEHOLDER	699-1010	
10	4	#10 EXTERNAL TOOTH LOCKWASHER	303-1020	
11	2	#10 SOLDER LUG	306-1020	
12	4	1" NYLON SEAT PLUG	309-7025	
13	25	18 AWG PVC HOOK-UP WIRE,BLACK	931-1021	1
15	10	18 AWG PVC HOOK-UP WIRE,RED	931-1022	1
17	3	20 AWG PVC TUBING,CLEAR	936-1003	
	1	2 SCR TERM BLK BHD MNT 3/8 CTR	191-1003	
	1	SO-239 UHF CONNECTOR 2 HOLE MOUNT	194-1006	

NOTES:

1. QUANTITY EQUALS LENGTH IN INCHES.

L P B P A R T S L I S T

AM-30/60 TRI-POWER OPTION

ASSY NO. 6025-A
PAGE 1
DATE 5/5/88
SUPERCEDES 1/5/88

SYMBOL	QTY	DESCRIPTION	PART	NOTES
1	1	AM-30/60 TRANSMITTER TRI-POWER PCB	671-6028-A	
R1	1	10K OHM TRIMPOT,VERT MNT.THMWHL ADJ	775-1130	1
R2	1	10K OHM TRIMPOT,VERT MNT,THMWHL ADJ	775-1130	1
R3	1	4.7K OHM.1/2W.5% RESISTOR.CARB FILM	762-2137	
R4	1	4.7K OHM,1/2W,5% RESISTOR,CARB FILM	762-2137	
D1	1	1N4148 SILICON SIGNAL DIODE	781-1048	
D2	1	1N4148 SILICON SIGNAL DIODE	781-1048	
K1,K2	2	1FORM A(SPST-NO)REED RELAY, 5V COIL	741-1001	
20	5	6" SELF-LOCKING NYLON TIE-WRAP	937-1004	
TB1	1	2 SCR TERM BLK BHD MNT 3/8 CTR	191-1003	
2	2	4-40 X 5/16" PAN HD SCREW PHILLIPS	301-1106	
3	1	6-32 X 3/8" PAN HD SCREW PHILLIPS	301-1214	
4	2	4-40 HEX NUT	302-1003	
5	5	6-32 HEX NUT W/LOCKWASHER (KEPS)	302-6018	
6	1	6-32 SOLID WING NUT	302-5010	
7	2	#4 EXTERNAL TOOTH LOCKWASHER	303-1005	
8	1	#6 EXTERNAL TOOTH LOCKWASHER	303-1010	
9	2	#6 FLAT WASHER	303-4010	
10	2	1/2" X 1/2" L BRACKET	305-1012	
11	1	#6 SOLDER LUG	306-1010	
12	4	22 AWG PVC HOOK-UP WIRE.WHITE	931-1001	2
13	4	22 AWG PVC HOOK-UP WIRE.BLACK	931-1002	2
14	12	22 AWG PVC HOOK-UP WIRE.GREEN	931-1004	2
15	12	22 AWG PVC HOOK-UP WIRE.GRAY	931-1009	2
16	7	18 AWG PVC HOOK-UP WIRE.RED	931-1022	2
17	2	6-32 X5/16" PAN HD SCREW PHILLIPS	301-1206	
18	2	6-32 X 1/2" PAN HD SCREW PHILLIPS	301-1212	
19	2	TRI-POWER "A - B" STICKER	444-6025-A	

NOTES:

1. TRIMPOT VALUE WILL VARY DEPENDING ON USER TPO REQUIREMENTS

2. QUANTITY EQUALS LENGTH IN INCHES.

L P B P A R T S L I S T

AM-60 COMBINER ASSEMBLY

ASSY NO. 3104-A
PAGE 1
DATE 2/21/90
SUPERCEDES 12/1/88

SYMBOL	QTY	DESCRIPTION	PART	NOTES
2	1	AM-30 POWER SUPPLY ASSEMBLY	6015-A	
3	1	RF CHASSIS	521-6036-C	
C50	1	9600 MFD AL CAP CAN 50V	172-3040	
	1	MOUNTING BRACKET FOR 172-3040	172-3043	
D1	1	RECTIFIER BRIDGE-50V,6A	781-1135	1
Q1	1	MJE6043 NPN DARLINGTON PR XSTR.FLAG	782-1127	1
P1	1	MOLEX PLUG 3 HOLE	195-1002	
V2	1	40VAC. 400A PEAK.MET-OX-VARISTOR	695-1020	
T5	1	56V 2A PWR XFMR CH MNT 56-2	861-1063	
T6	1	2.4 " FERRITE TOROID	201-1009	2
T7	2	1.1 " FERRITE TOROID	201-1006	3
T8	1	2.4 " FERRITE TOROID	201-1009	4
R55	1	50 OHM. 25W. 5% RESIS,W/W.NON-IND	766-1247	1
R56	1	50 OHM. 25W. 5% RESIS,W/W.NON-IND	766-1247	1
	1	1+1 LH MNT TERMINAL STRIP PHENOLIC	197-1001	
	2	1+1 CTR MNT TERMINAL STRIP PHENOLIC	197-1005	
	1	1+1 RH MNT TERMINAL STRIP PHENOLIC	197-1002	
3	1	SO-239 UHF CONNECTOR 2 HOLE MOUNT	194-1006	5
SA	1	300-500VDC SURGE ARRESTOR	697-1015	
6	3	MOLEX PIN (FOR 195-1002)	195-1005	
7	8	6-32 X 1/4" PAN HD SCREW PHILLIPS	301-1204	
8	7	6-32 X 3/8" PAN HD SCREW PHILLIPS	301-1208	
9	7	4-40 X 1/4" PAN HD SCREW PHILLIPS	301-1104	
10	1	6-32 X 5/8" PAN HD SCREW PHILLIPS	301-1214	
11	4	10-32 X 1/2" PAN HD SCREW PHILLIPS	301-1512	
12	4	4-40 HEX NUT	302-1005	
13	2	6-32 HEX NUT W/LOCKWASHER (KEPS)	302-6018	
14	4	10-32 HEX NUT	302-1020	
15	13	#4 EXTERNAL TOOTH LOCKWASHER	303-1005	
16	15	#6 EXTERNAL TOOTH LOCKWASHER	303-1010	
17	4	#10 EXTERNAL TOOTH LOCKWASHER	303-1020	
18	4	6-32 X 3/8" HEX THREADED SPACER	304-1078	
19	1	#4 SOLDER LUG	306-1005	
20	5	#6 SOLDER LUG	306-1010	
22	4	4-40 X 3/8" PAN HD SCREW PHILLIPS	301-1108	
24	4	1" NYLON VENT PLUG	309-7025	
25	1	CHASSIS MOUNT FUSEHOLDER	699-1010	
27	1	MICA INSULATOR,.5" X .85"	789-1016	1
28	1	#4 COMPRESSION WASHER	789-1021	
29	19	22 AWG PVC HOOK-UP WIRE,GREEN	931-1004	6
30	22	22 AWG PVC HOOK-UP WIRE,BLUE	931-1006	6
31	23	18 AWG PVC HOOK-UP WIRE,WHITE	931-1020	6
32	92	18 AWG PVC HOOK-UP WIRE,BLACK	931-1021	6
33	68	18 AWG PVC HOOK-UP WIRE,RED	931-1022	6
34	15	18 AWG PVC HOOK-UP WIRE,GREEN	931-1025	6

CONTINUED ON PAGE 2

L P B PARTS LIST

AM-60 COMBINER ASSEMBLY

ASSY NO. 6104-A
PAGE 2
DATE 2/21/90
SUPERCEDES 12/1/88

SYMBOL	QTY	DESCRIPTION	PART	NOTES
35	32	18 AWG PVC HOOK-UP WIRE,GRAY	931-1029	6
36	9	18 AWG TINNED COPPER BUS WIRE	935-1017	6
37	10	16 AWG TEFLON TUBING,CLEAR	936-1008	6
38	1	20 AWG TINNED COPPER BUS WIRE	935-1016	6
39	3	6" SELF-LOCKING NYLON TIE-WRAP	937-1004	
40	6	LOCKING PVC TIE-WRAP W/6-32 INSERT	937-1009	
42	1	"CAUTION LIVE VOLTAGE" LABEL	444-1000	
43	172	20 AWG MAGNET WIRE,NYLEZE,RED	939-1012	6
44	135	20 AWG MAGNET WIRE,NYLEZE,GREEN	939-1013	6

NOTES:

1. USE A THIN COAT OF THERMAL HEATSINK COMPOUND [illegible]

2. RF POWER SPLITTER TRANSFORMER - 2 WAY
   A.) STANDARD 50% / 50% - SEE SCD #865-1022
   B.) SPECIAL SPLITS - SEE DWG #????????

3. RF COMBINER TRANSFORMER (9:13) - SEE SCD #865-2437-A

4. RF COMBINER TRANSFORMER (29:29) - SEE SCD #865-2438

5. REMOVE PAINT INSIDE CHASSIS UNDER MOUNTING HARDWARE

6. QUANTITY EQUALS LENGTH IN INCHES.

L P B P A R T S L I S T

AM-60 SIDE PANEL ASSEMBLY

ASSY NO. 6105-A
PAGE 1
DATE 2/21/90
SUPERCEDES 11/21/88

SYMBOL	QTY	DESCRIPTION	PART	NOTES
1	1	AM-30 POWER SUPPLY ASSEMBLY	6015-A	
2	1	RF DRILLED SIDE PANEL	521-6033-C	1
Q1	1	MJE6043 NPN DARLINGTON PR XSTR,PLAS	782-1127	2
D1	1	RECTIFIER BRIDGE-50V.6A	781-1153	2
S1	1	SPDT MIN TOGGLE SWITCH,PC MOUNT	821-1005	
P1	1	MOLEX PLUG 3 HOLE	195-1002	
3	3	MOLEX PIN (FOR 195-1002)	195-1005	
4	1	4-40 X 3/8" PAN HD SCREW PHILLIPS	301-1108	
5	6	6-32 X 1/4" PAN HD SCREW PHILLIPS	301-1204	
6	1	6-32 X 3/8" PAN HD SCREW PHILLIPS	301-1208	
7	1	6-32 X 5/8" PAN HD SCREW PHILLIPS	301-1214	
8	1	4-40 HEX NUT	302-1005	
9	6	6-32 HEX NUT W/LOCKWASHER (MEFS)	302-2018	
10	1	#4 EXTERNAL TOOTH LOCKWASHER	303-1005	
11	7	#6 EXTERNAL TOOTH LOCKWASHER	303-1010	
12	4	6-32 X 3/8" HEX THREADED SPACER	304-1078	
13	1	#6 SOLDER LUG	306-1010	
14	1	"CAUTION LINE VOLTAGE" LABEL	444-1000	
15	1	MICA INSULATOR.[illegible] X .65"	787-1016	2
17	1	#4 COMPRESSION WASHER	787-1021	
18	4	22 AWG PVC HOOK-UP WIRE,BLACK	931-1002	3
19	9	22 AWG PVC HOOK-UP WIRE,GREEN	931-1004	3
20	18	22 AWG PVC HOOK-UP WIRE,BLUE	931-1006	3
21	4	18 AWG PVC HOOK-UP WIRE,WHITE	931-1020	3
22	40	18 AWG PVC HOOK-UP WIRE,BLACK	931-1021	3
23	48	18 AWG PVC HOOK-UP WIRE,RED	931-1022	3
24	19	18 AWG PVC HOOK-UP WIRE,GRAY	931-1029	3
25	3	18 AWG TINNED COPPER BUS WIRE	939-1017	3
27	4	6-32 X 2" PAN HD SCREW,PHILLIPS	301-1278	
28	1	FAN, 115VAC, BALL BEARING, 36 CFM,	561-1005	4
29	1	1/4"" ID GROMMET	309-3006	
30	1	1/2" ID GROMMET	309-3015	
31	1	1" ADHES BASE TIE-WRAP HOLD-DOWN,NY	937-1012	

NOTES:

1. REMOVE PAINT UNDER D1 & Q1 MOUNTING LOCATION IF NECESSARY. APPLY THIN COAT OF THERMAL HEATSINK COMPOUND.

2. USE A THIN COAT OF THERMAL HEATSINK COMPOUND BETWEEN COMPONENT AND HEATSINK - SCRAPE PAINT IN REQUIRED.

CONTINUED ON PAGE 2

L P B PARTS LIST

AM-60 SIDE PANEL ASSEMBLY

ASSY NO. 6105-A
PAGE 2
DATE 2/21/90
SUPERCEDES 11/21/88

3. QUANTITY EQUALS LENGTH IN INCHES.

4. MODIFY SIDE PANEL PER DWG. #6105-A BEFORE ASSEMBLYING

L P B P A R T S L I S T

AM-30 P EXCITER BOARD ASSEMBLY

ASSY NO. 6094-F
PAGE 1
DATE 2/20/90
SUPERCEDES 1/5/88

SYMBOL	QTY	DESCRIPTION	PART	NOTES
	1	AM-30/60/100 EXCITER BOARD ASSEMBLY	6010-F	1
C47	1	265 -880 PF VAR CAP COMP MICA 500V	179-1010	
1	1	NYLON FLAT WASHER 9/32" ID 1/2" OD	303-4030	
X1	1		-	2

NOTES:

1. MODIFY EXCITER PER ECO #2210-8312-2
2. REPLACE STANDARD TOLERANCE CRYSTAL (212-XXXX) WITH 6X CRYSTAL, .0003% HI-TOL. (217-XXXX)

L P B PARTS LIST

AM-60 F SHELF ASSEMBLY

ASSY NO. 6151-A
PAGE 1
DATE 6/24/88
SUPERCEDES 6/10/88

SYMBOL	QTY	DESCRIPTION	PART	NOTES
1	1	AM-60 F FINAL ASSEMBLY	6152-A	
2	2	RF FRONT PANEL	521-6034-A	
3	4	LATCH GROMMET-NYLON	309-1021	
4	4	LATCH PLUNGER-NYLON	309-1020	
5	1	3' RG-58A/U COAX CABLE,W/PL-259(REF	933-1040	
6	1	AM-50P/60F SELF ADHESIVE INSTR SHT	441-6093-A	
7	4	#10 X 1/2" HEX HD SHEET METAL SCREW	301-6412	
8	2	FORK LUG,#6 STUD,22-16 GA WIRE	195-1015	

L P B P A R T S L I S T

AM-60 P FINAL ASSEMBLY

ASSY NO. 6152-A
PAGE 1
DATE 11/21/88
SUPERCEDES 6/10/88

SYMBOL	QTY	DESCRIPTION	PART	NOTES
1	2	RF POWER AMPLIFIER MODULE	6005-A	
2	1	AM-30 P EXCITER BOARD ASSEMBLY	6094-F	
3	1	AM-60 CHASSIS ASSEMBLY	6153-A	
R38	1	12K OHM,1/2W,5% RESISTOR,CARB FILM	762-2147	1
R44	1	7.5K OHM,1/2W,5% RESISTOR,CARB FILM	762-2142	1
R45	1	1.5K OHM,1/2W,5% RESISTOR,CARB FILM	762-2125	1
R46	1	56 OHM, 5W, 5% RESISTOR,WIREWND	765-1250	1
C36	1	.1 MFD CER DISC CAP 50V	174-1254	1
D11	1	1N34A GERMANIUM SIGNAL DIODE	781-1001	1
6	1	2 SCR TERM BLK BRD MNT 3/8 CTR	191-1003	
7	8	6-32 X 1/4" PAN HD SCREW PHILLIPS	301-1204	
8	7	6-32 X 3/8" PAN HD SCREW PHILLIPS	301-1208	
9	9	6-32 X 1/2" PAN HD SCREW PHILLIPS	301-1212	
11	16	6-32 HEX NUT W/LOCKWASHER (HEPS)	302-6015	
13	4	6-32 X 3/4" HEX THREADED SPACER	304-1036	
14	1	6-32 X 3/8 PAN HD SCREW PHILLIPS	301-1211	
15	8	22 AWG PVC HOOK-UP WIRE,WHITE	931-1001	2
16	2	#10 SOLDER LUG	306-1020	
17	170	RG-174/U COAXIAL CABLE	933-1019	2
18	1	1/8" PVC SHRINKABLE TUBING,BLACK	936-1024	2
19	10	8" SELF-LOCKING NYLON TIE-WRAP	937-1004	
20	4	1" ADHES BASE TIE-WRAP HOLD-DOWN,NY	937-1012	
25	1	4-40 X 3/8" PAN HD SCREW PHILLIPS	301-1108	
26	1	4-40 HEX NUT	302-1005	
27	1	#4 EXTERNAL TOOTH LOCKWASHER	303-1005	
28	1	4 AMP,250V,NON-TIME-DELAY FUSE	692-1021	

NOTES:

1. INSTALL IN RF AMPLIFIER ASSEMBLY #6005

2. QUANTITY EQUALS LENGTH IN INCHES.

L P B PARTS LIST

AM-60 CHASSIS ASSEMBLY

ASSY NO. 6153-A
PAGE 1
DATE 11/21/88

SYMBOL	QTY	DESCRIPTION	PART	NOTES
	1	AM-30 CHASSIS ASSEMBLY	6020-A	
	1	AM-60 SIDE PANEL ASSEMBLY	6105-A	
6104-A	1	AM-60 COMBINER ASSEMBLY	6104-A	
	4	#6 TINNERMAN NUT	302-3010	
	4	6-32 X 1/2" PAN HD SCREW PHILLIPS	301-1212	

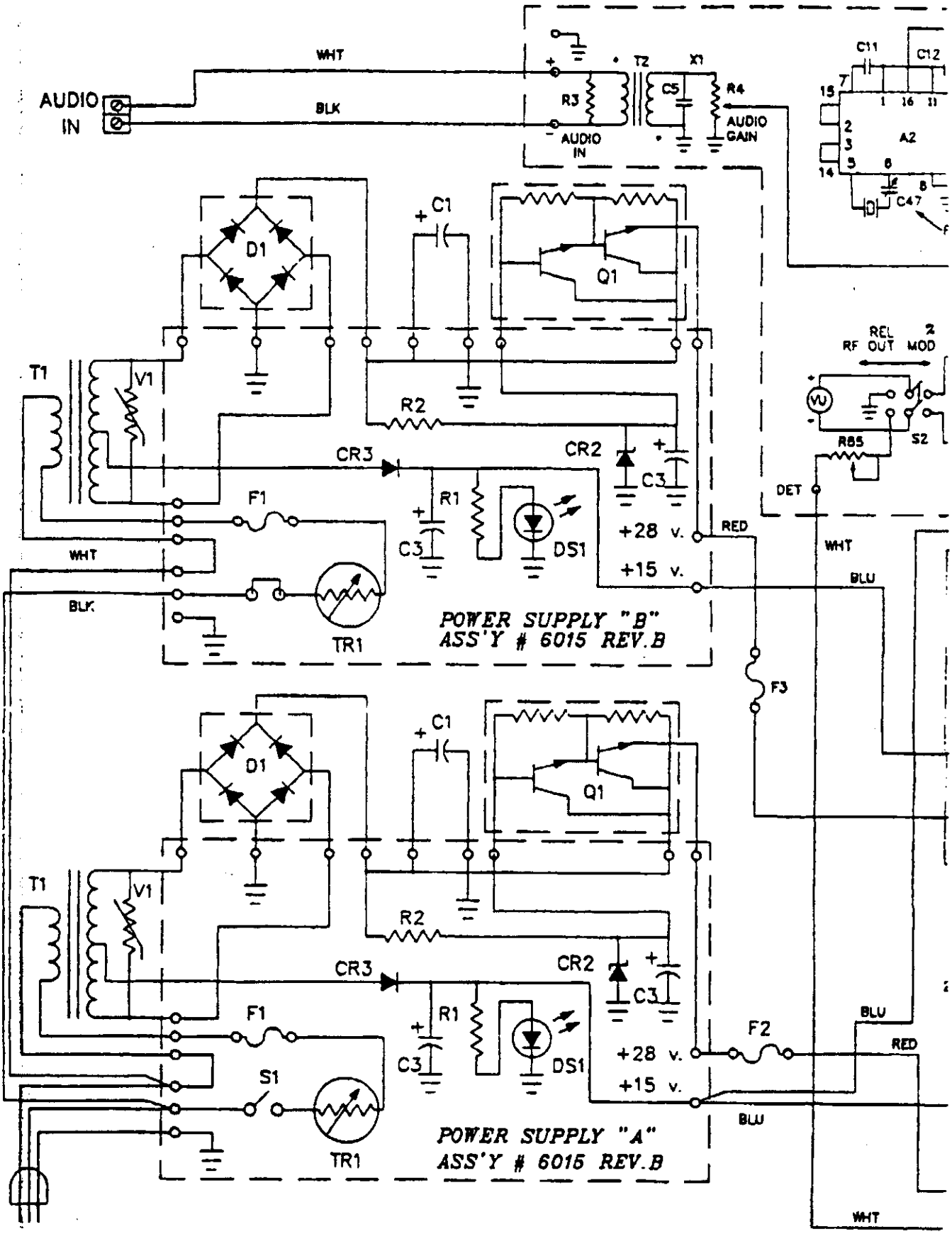

AM-60P MAIN FRAME S

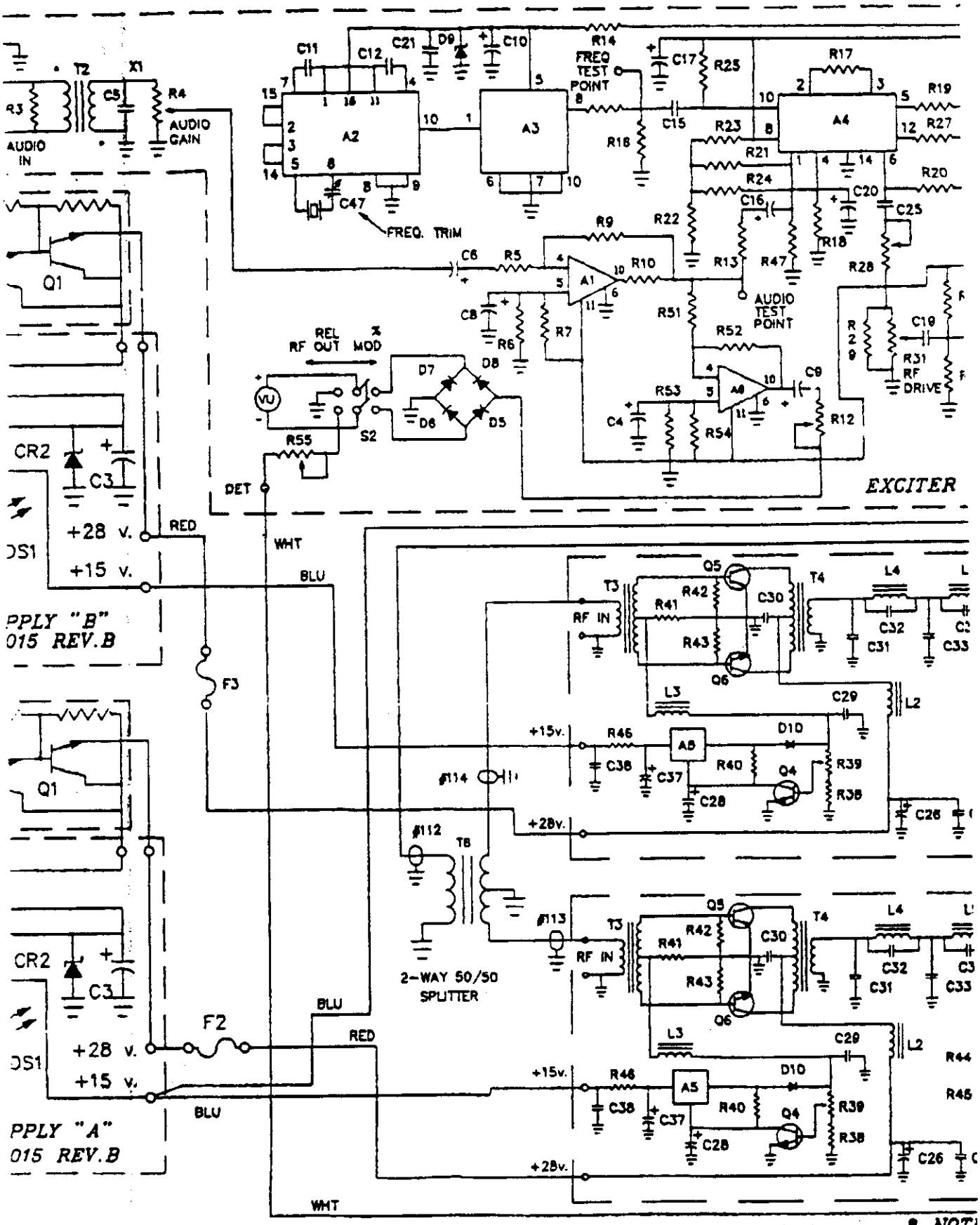

AM-60P MAIN FRAME SCHEMATIC # 6154 REV.D

• NOTE: R

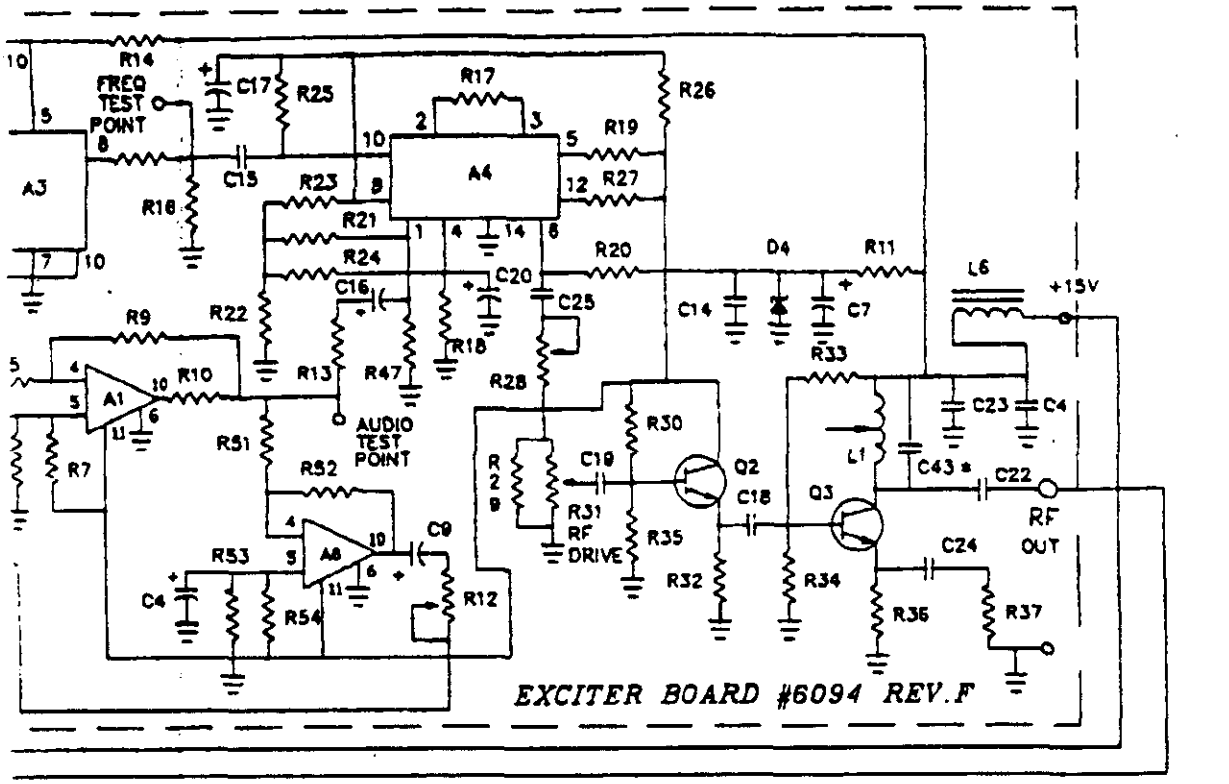

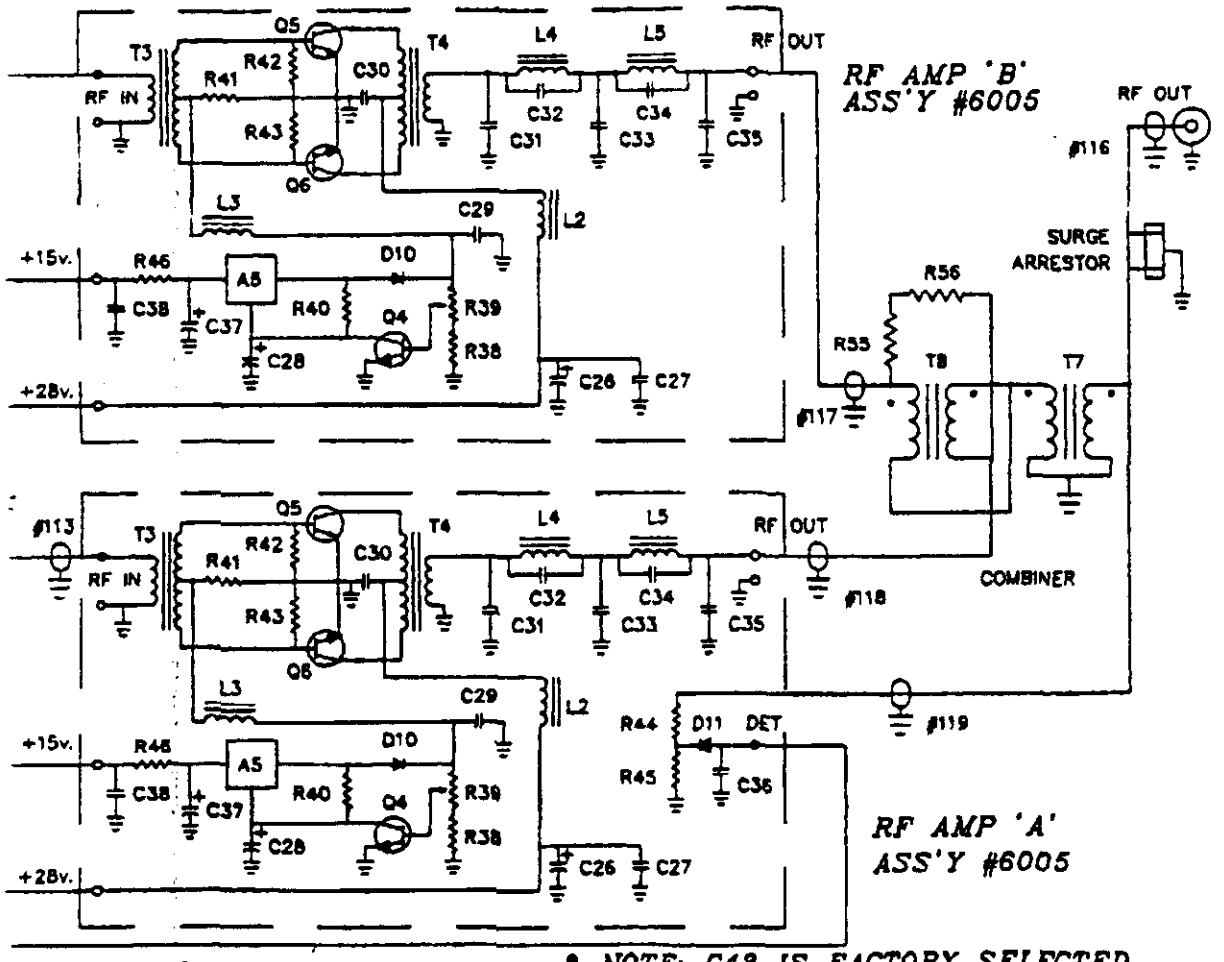

FIC # 6154 REV.D

• NOTE: C43 IS FACTORY SELECTED
NOTE: R12,R28,R39,R55 FACTORY SET

Installation Diagram for TII Surge Arrestor into LPB AM Transmitters

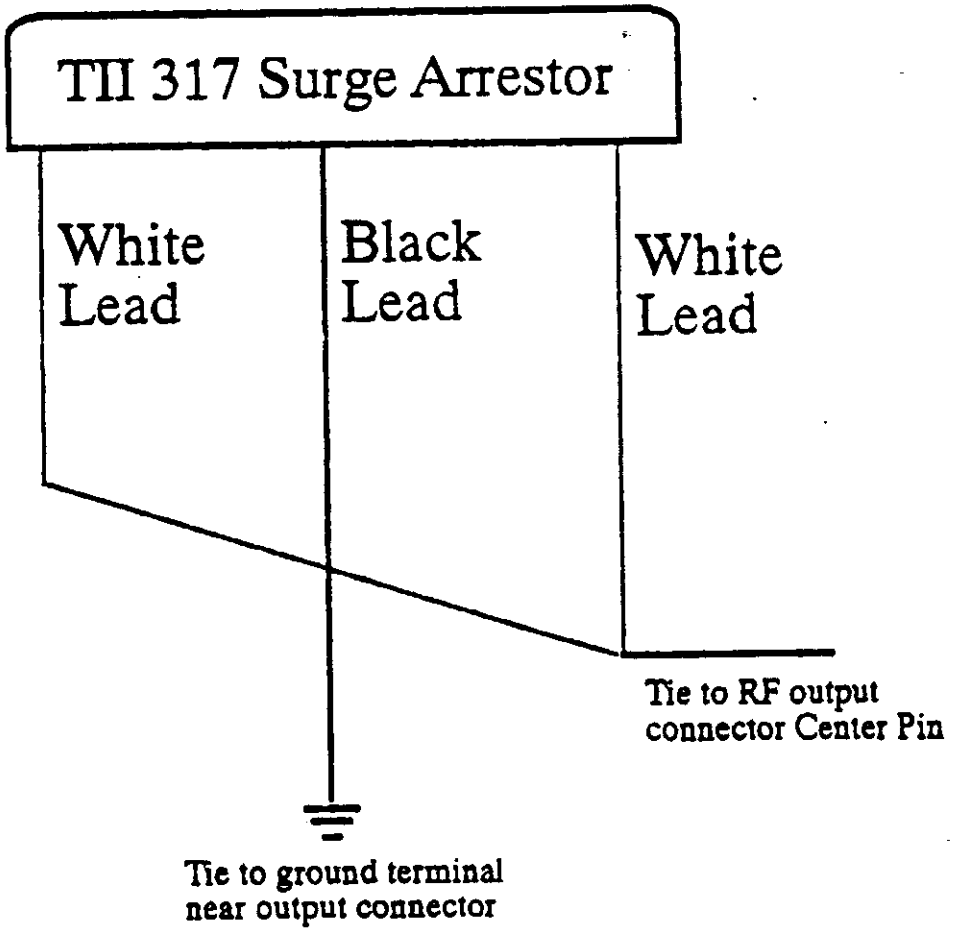

LPB®
28 Bacton Hill Rd., Frazer, PA 19355. Phone 610-644-1123. Fax 610-644-8651

Attachment 5

Attachment 6

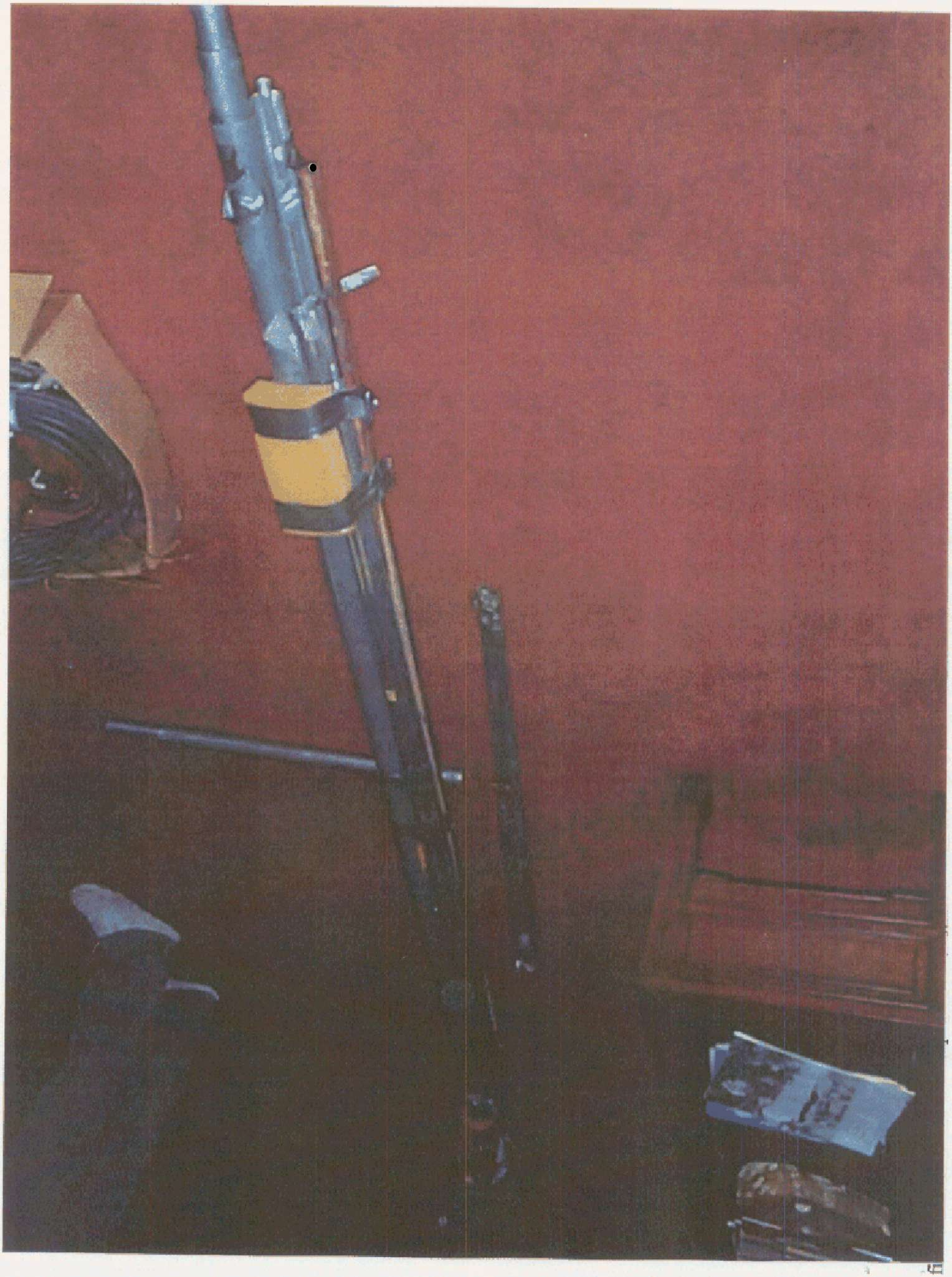

Attachment 7