BellSouth Corporation
Suite 900
1133-21st Street, NW
Washington, DC 20036-3351

glenn.reynolds@bellsouth.com

Glenn T. Reynolds
Vice President -
Federal Regulatory

202 463 4112
Fax 202 463 4142

December 12, 2003

EX PARTE

Ms. Marlene H. Dortch
Secretary
Federal Communications Commission
The Portals
445 12th St. SW
Washington, D.C. 20554

Re: CC Dockets 02-33 and 02-361

Dear Ms. Dortch:

This is to inform you that on December 11, 2003, BellSouth met with Chris Libertelli and Trey Hanbury to discuss issues relating to the dockets identified above. Representing BellSouth at these meetings were Jon Banks and the undersigned.

During these meetings, BellSouth described its efforts to deploy Voice over Internet Protocol services and the regulatory hurdles it faces in doing so. Among the issues raised, was the impact of the Commission's Computer Inquiry rules on the deployment of these services. The attached presentation was distributed at these meetings and formed the basis for this discussion. Also mentioned during these meetings was AT&T's Petition for Declaratory Ruling (Docket 02-361). BellSouth urged that the Commission should expeditiously resolve that proceeding by concluding AT&T's service to be a telecommunications service subject to access charges.

Pursuant to Commission rules, please include this notice and attachment in the docket of the proceedings identified above.

Sincerely,

Glenn Reynolds

cc: Chris Libertelli
Trey Hanbury

BellSouth Ex Parte >> Presentation re. AT&T IP Telephony Petition

December 9, 2003

BELLSOUTH

>> What is AT&T's "IP Telephony" Service?

- A telecom service where an end user customer uses their traditional telephone set to call another traditional telephone set and the telecom provider uses Internet protocol (IP) technology to transport one or more segments of the call

- The service does not change the form or content of the conversation as sent and received; the type of network the call is transmitted over is transparent (i.e., does not change service functionality received by customer) to the parties on the call

- Is identical, by all relevant regulatory and legal measures, to any other basic telecom service

- Should not be confused with access to the Internet through an ISP; for AT&T's IP telephony service: (1) end user gets dial tone, not modem buzz; (2) uses traditional telephone sets, not computer or computer IP phones, and no special CPE is needed; (3) calls route using telephone numbers, not IP addresses; and (4) telecommunications, not information or enhanced --- the end user is receiving plain old telephone service

>> Diagram of AT&T IP Telephony Service

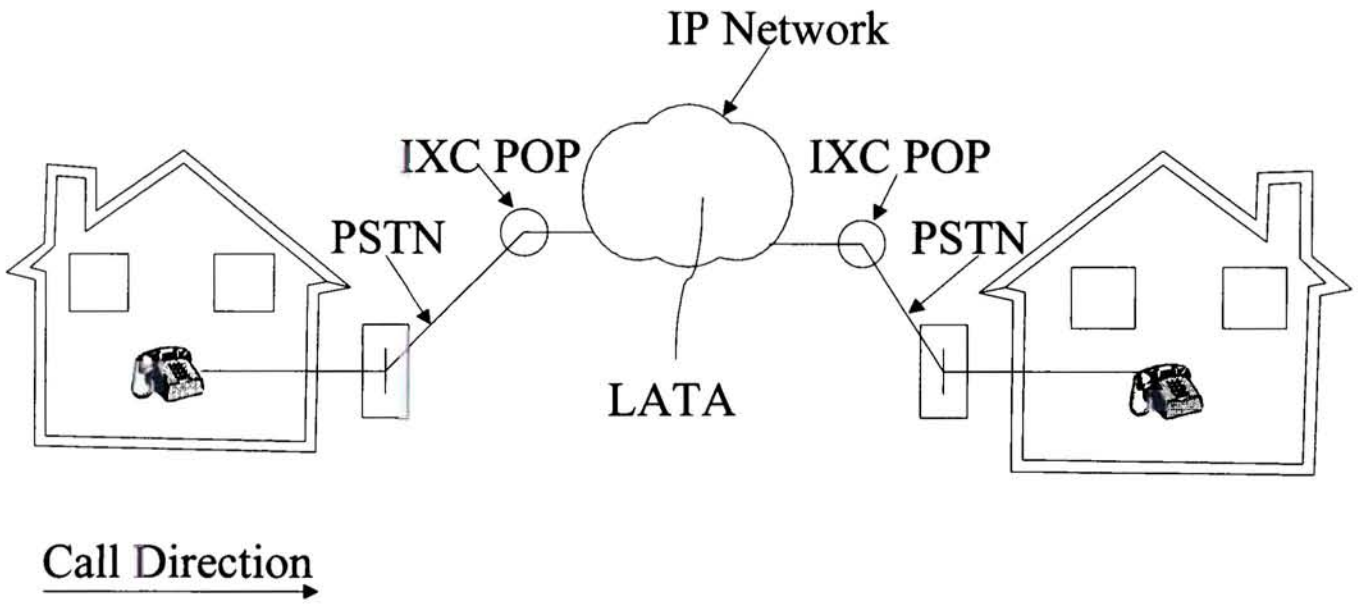

BELLSOUTH

>> Report to Congress re. Universal Service

- FCC's 4/10/98 Report to Congress states: "The record…suggests… 'phone-to-phone IP telephony' services lack the characteristics that would render them 'information services' within the meaning of the statute, and instead bear the characteristics of 'telecommunications services.'" [para. 101]

- FCC stated that phone-to-phone IP telephony "most closely resemble[s] traditional basic transmission offerings." [para. 83]

- FCC also stated that the provision of phone-to-phone IP telephony "results in no net protocol conversion to the end user." [para. 52]

- FCC tentatively defined calls as telecommunications if:
  (1) Provider holds itself out as providing telecommunications;
  (2) Customer can use ordinary CPE;
  (3) Customers can call using NANP; and
  (4) Information is transmitted without net change [para. 88]

- By contrast, FCC concluded that with respect to "computer-to-computer IP telephony, the [ISP] does not appear to be 'provid[ing]' telecommunications to its subscribers." [para. 87]

>> Report to Congress re. Universal Service

- Specifically addressing access charges the Report states:

  "We note that, to the extent we conclude that certain forms of phone-to-phone IP telephony service are 'telecommunications services', and to the extent the providers of those services obtain the same circuit-switched access as obtained by other [IXCs], and therefore impose the same burdens on the local exchange as do other [IXCs], we may find it reasonable that they pay similar access charges." [para. 91]

- The service identified in AT&T's petition is clearly a telecom service; therefore, the ESP access exemption cannot apply.

- FCC rules(47 C.F.R. 69.5(b)) require access charges where telecom services use local exchange switching facilities. The Report did not create a new access charge exemption specifically for phone-to-phone IP telephony; moreover, the FCC did not classify phone-to-phone IP telephony as an information/ enhanced service making it eligible for the exemption.

>>

How AT&T routes intrastate, phone-to-phone calls in Florida

1. Call originates in Tallahassee using AT&T LD, destined for a BellSouth end user in Miami

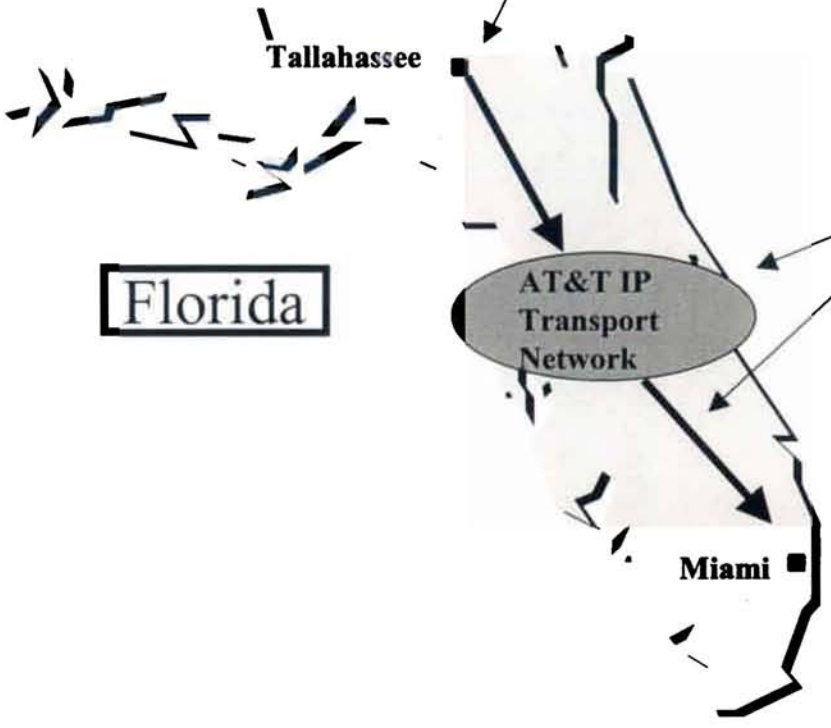

2. After passing through "IP facilities", AT&T hands off call to its local Subsidiary for termination to BellSouth

3. At the terminating end, the AT&T local subsidiary pays BellSouth local reciprocal compensation of about $0.002 per minute, rather than the appropriate Florida tariffed rate of $0.022 per minute

BELLSOUTH

>>

How AT&T routes interstate, phone-to-phone calls entering Florida

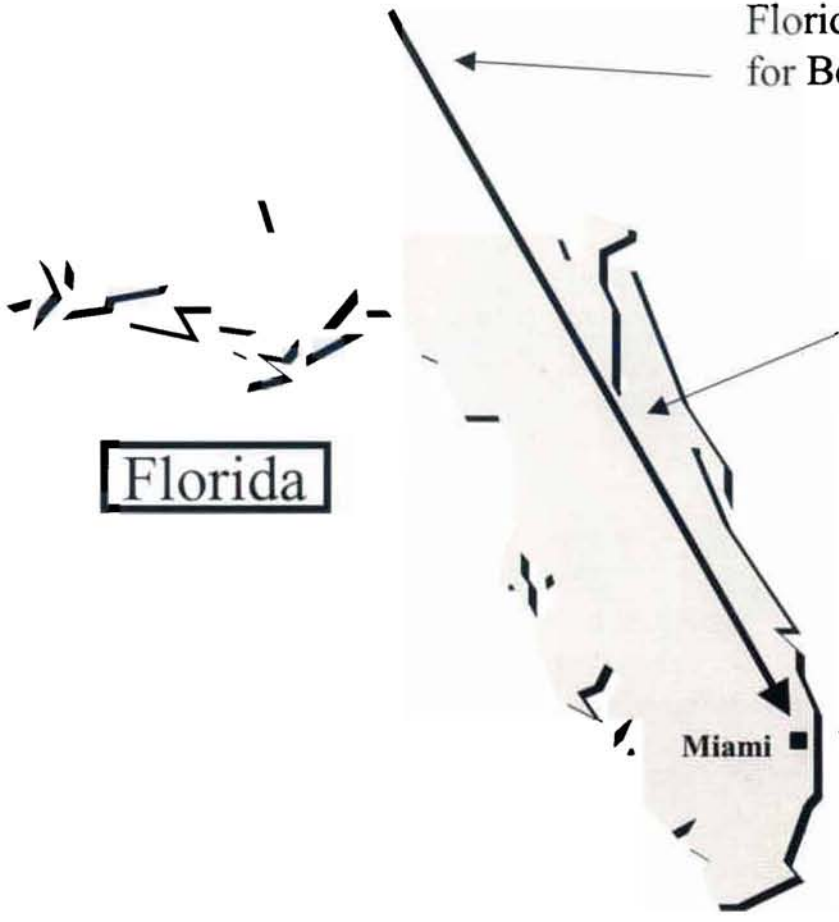

1. Call originates outside of Florida using AT&T LD, destined for BellSouth end user in Miami

2. Interstate calls are not completed via "IP facilities" and handed off to AT&T's local subsidiary, but continue to the terminating end on AT&T's LD facilities in the traditional manner.

3. At the terminating end, AT&T LD pays BellSouth terminating switched access in accordance with BellSouth's FCC No.1 interstate terminating switched access tariff rates of approximately $0.005 per minute.

BELLSOUTH

>> FCC Needs to Act Quickly

- MCI's CEO has reported that "[h]e aims to push Net traffic to 50% of all MCI calls next year and to almost a full 100% in 2005." [10/23/03 Forbes article]

- AT&T announced it is moving to a single IP network and would move at least 25% of its voice traffic over its IP core by year-end 2004. [9/15/03 Network World article]

- AT&T's petition needs to be resolved ASAP.

Conclusion

- The type of service described in AT&T's petition is not a service even contemplated in the Report to Congress.
- AT&T's IP telephony service is plain old telephone service, not an enhanced or information service, and therefore is not subject to the ESP access charge exemption.
- The FCC has not created an access charge exemption for the IP telephony service described in AT&T's petition.
- AT&T's petition does not support an exemption from access charges for its IP telephony service.
- The FCC has all of the facts it needs to issue an order denying AT&T's petition and need not await its planned VoIP rulemaking, and it should affirmatively state that the services described therein are telecom services and access charges apply.
- The FCC needs to act quickly to remove the growing uncertainty in the industry.

BELLSOUTH

VoIP

BellSouth

December 9, 2003

Major Questions Around VoIP

- What is the right regulatory regime for VoIP services and how can policy makers ensure that all providers are regulated in the same manner to achieve the FCC's goals?
- How should regulators ensure that all competitors are subject to similar public interest obligations?

VoIP – General Consensus

- There appears to be a general consensus around the following:
  - VoIP applications should evolve in an economic regulation free zone – absent a compelling justification
  - Policies need to facilitate and encourage investment in and convergence of voice, data and video onto Internet based networks
  - VoIP investment and jobs need to remain in the U. S.
  - Public interest (CALEA, 911, USF) must be addressed

Key Goals Regarding VoIP

- Ensure that there is parity among all providers (cable, ILECs, CLECs, IXCs, ISPs, ASPs) in the regulation of VoIP services
  - VoIP industry is nascent and no company or industry segment dominates this market, especially not the ILECs/BOCs
  - As VoIP is a new broadband technology requiring new investment, it is critical that no competitor class be saddled with asymmetrical and unfair regulation
- Minimize economic regulation around VoIP services sold to end-users
- Protect Universal Service

There are Two Paths to the Right Outcome

- VoIP as an information service
- VoIP as a telecommunications service

VoIP As An Information Service

- There should be no economic regulation (i.e., regulation of prices, service quality, etc.) for any provider of VoIP services
- Public safety regulation (i.e., E911, CALEA, etc.) should apply to VoIP services after giving industry reasonable opportunity to develop and implement cost effective technical solutions.
- VoIP providers should contribute to USF
- Access charges should apply wherever the PSTN is used

VoIP As An Information Service

- The service is interstate due to the jurisdictionally inseverable nature of data packets – calling capabilities are an integral part of a constant flow of data packets
- The FCC has primary jurisdiction over NANP numbering resources used to provide VoIP information service applications
- The FCC should establish the regulatory paradigm that applies to these services.

VoIP As An Information Service

- There is no compelling justification to apply FCC's Computer Inquiry (CI) rules, adopted in the 1980's to address narrowband telecommunications competitive concerns, to the BOC provision of VoIP broadband communications services
- CI rules impose unnecessarily costly and duplicative regulations on BOC provision of these services
- Competitive discrimination concerns are fully addressed by the local competition statutes in 1996 Act and FCC's corresponding implementation rules
- VoIP providers are freely operating as or forming business alliances with CLECs and there has been no demonstrated need for an additional layer of CI regulation with regard to these services.
- There is no compelling reason to apply CI rules to any provider of broadband communications services absent the existence of a dominant provider of such services.

VoIP As An Information Service

- CI rules impose unnecessarily costly and duplicative regulations on BOC provision of VoIP broadband communications services:
  - Requires tariffing of the telecom component(s) underlying the information service to ensure third-party access to network capabilities equivalent to those used by BOC's ISP. Local competition rules ensure same equivalent access for VoIP services
  - Requires that non-affiliated ISPs be given the same access to OSSs for telecom services. Local competition rules (e.g. OSS parity rules) ensure equivalent access for VoIP providers
  - Requires BOC to impute a "fictitious" two-mile transport cost to its information service when collocating VoIP equipment in a central office. CLECs can collocate equipment in same CO rendering this rule superfulous in a packet transmission environment

VoIP As An Telecommunications Service

- Wherever VoIP technology is used in a transparent manner to the originating end-user customer to transport some part of the call:
  - It is telecommunications service
  - Access charges apply as with any other telecommunications service

Switched Access Charges and VoIP

- Wherever a VoIP call accesses the PSTN, switched access charges should apply.
- The ESP access exemption does not apply to such traffic
  - The FCC should clarify that the ESP access charge exemption does not apply regardless of how the VoIP service is classified.

VoIP and Access Charges

- While BellSouth's access charge argument makes good policy sense, a transition to Bill and Keep for all intercarrier compensation is needed to provide clear and certain incentives for network investment

Convening of a Federal – State Joint Board

- FCC should convene a Joint Board to develop, within 9 months, rules for the public interest and public safety obligations of all VoIP providers

- The issues to be addressed should include provision of E911, capability for surveillance by law enforcement, access for disabled, and support for universal service

- The Joint Board would also make recommendations on ISP direct access to NANP numbers

Conclusions

- Given no dominant provider of VoIP services, all providers, including BOCs, should be free of economic regulation
- If VoIP is classified as an information service, there is no compelling justification to apply Computer Inquiry rules
- The ESP access charge exemption does not apply to VoIP regardless of how it is classified
- Access charges should apply anytime PSTN is used to originate or terminate VoIP calls

Traditional Phone to Phone

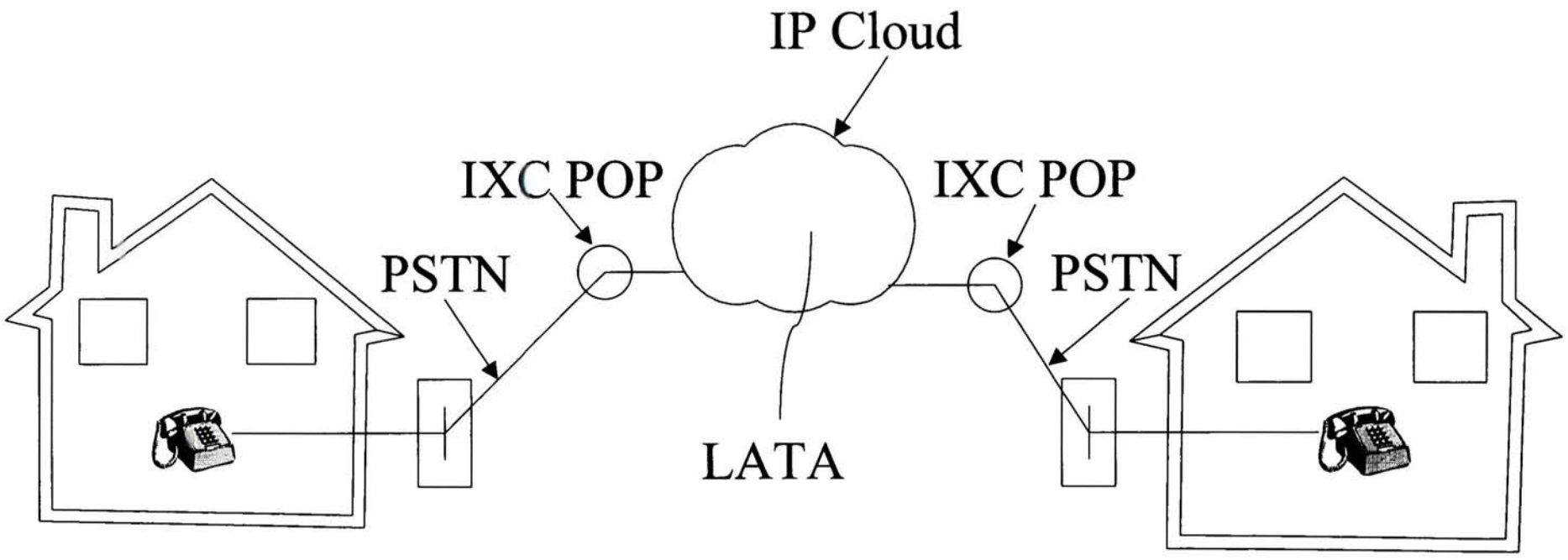

Call Direction →

Conclusion: This service is a telecommunications service, and access charges apply at both ends.

Computer (or VoIP Phone) to Computer (or VoIP Phone)

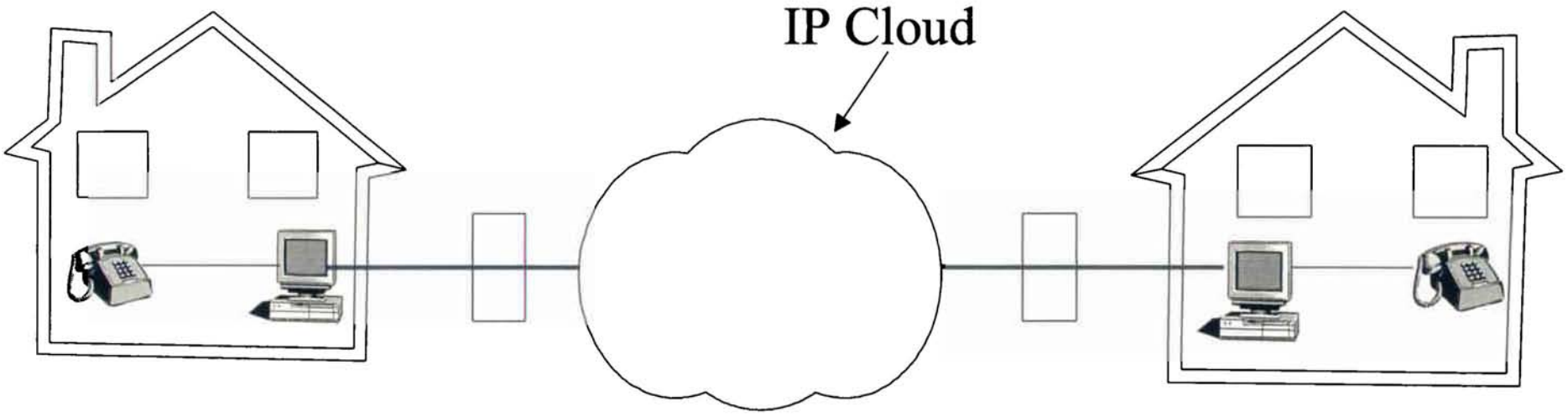

Call Direction →

—— IP Protocol

Conclusion: This service is an information service. Since any "voice" call never hits the PSTN, switched access charges do not apply.

Computer (or VoIP Phone) to Phone - #1

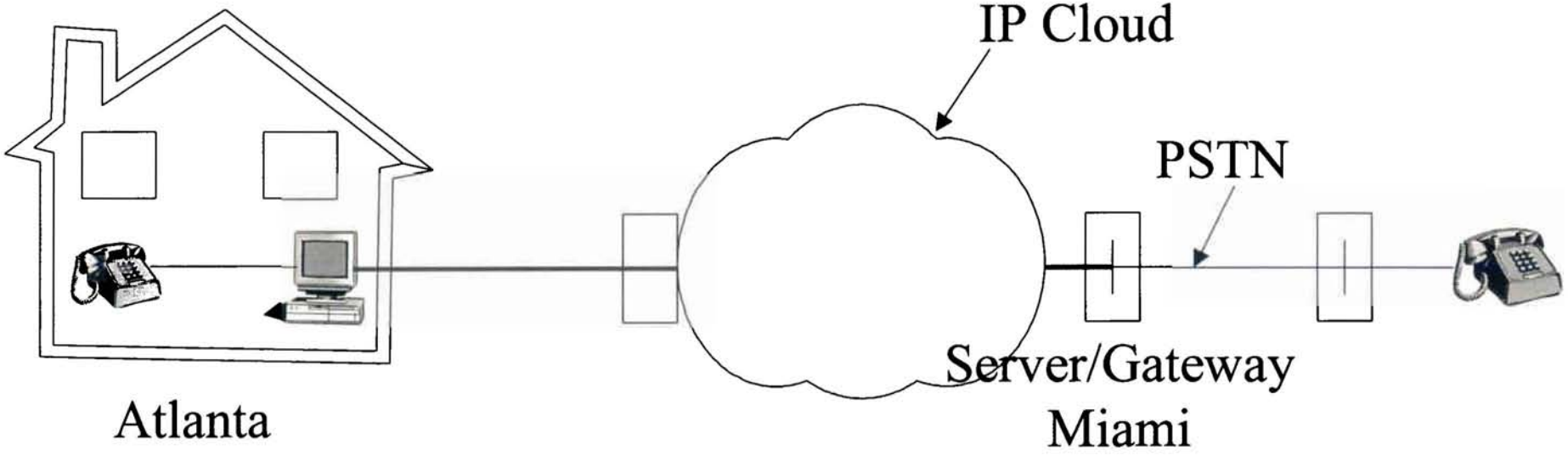

Call Direction →

In this example, switched access charges would only apply at the terminating end.

—— IP Protocol

Computer (or VoIP Phone) to Phone - #2

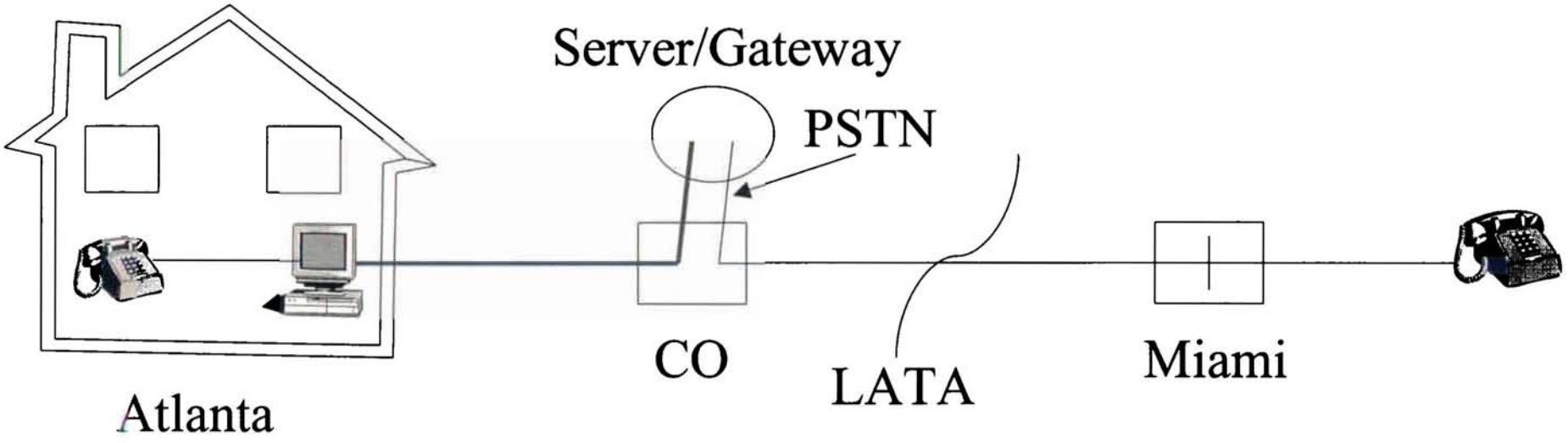

Call Direction →

—— IP Protocol

In this example, switched access charges would apply at both the originating end and the terminating end since the PSTN is accessed and used on both ends.

Backup

VoIP Regulatory Treatment is Cloudy

- Minnesota – Vonage VoIP service is a telecom service; California and Wisconsin have made similar decisions regarding VoIP; federal court blocked Minn. PUC ruling; PUC is appealing
- North Carolina – No definitive ruling though public staff leans toward telecom service outcome
- Florida – VoIP is free from regulation, per legislation
- FCC – Has leaned toward information service classification (except for "phone-to-phone"), but has not made definitive findings; Vonage has asked for a declaratory ruling – comments filed 10/27/03; replies 11/24/03
- Alabama – Comments submitted 10/31/03 and replies 12/2/03 on petition filed by 31 ICOs asking that VoIP be a telecom service
- FCC conducted a VoIP forum on 12/1 and has announced it will issue an NPRM shortly

Vonage Petition re. VoIP

- Filed a petition with the FCC in response to a Minnesota PUC decision to regulate Vonage's VoIP service as a "telephone service"

- Argues that it is an ISP and the FCC should declare that the PUC is preempted from imposing common carrier regulation, including regulation of entry and rates, on the information service ("Internet communications application") it offers; also asks the FCC to find that certain specific E911 requirements imposed by the PUC are in conflict with federal policies

- States that preemption is necessary because of the impossibility of separating the Internet, or any service offered over it, into intrastate and interstate components

- U.S. District Court issued a permanent injunction forbidding the PUC from enforcing its order, agreeing that Vonage's service was an information service; PUC has appealed

- *BellSouth comments on the Vonage Petition:* FCC should make decisions around VoIP and how public interest regulatory obligations should apply. FCC should rule that phone-to-phone IP is basic telecom service.

Florida Legislation on VoIP

- With SB 0654, the legislature found that VoIP should be "free from unnecessary regulation, regardless of the provider" (enacted 5/23/03)

- VoIP was excluded from the definition of the term "service", but nothing in this law "shall affect the rights and obligations of any entity related to the payment of switched access rates or other intercarrier compensation, if any, related to [VoIP] service."

- Should the FCC or FPSC issue a final order determining that access charges do not apply to VoIP service or a functionally equivalent service, a LEC can reduce its switched access rates to its authorized local reciprocal compensation rates in a revenue-neutral manner

Alabama Proceeding re. VoIP

- 31 ICOs petition for a declaratory ruling that providers of intrastate "phone-to-phone" IP telephony service or other VoIP services are:
  - "Transportation companies" as defined by Alabama Code;
  - Subject to APSC rules applicable to provision of telephone service, including filing of tariffs; and
  - Responsible for payment of intrastate access charges for orig. or term. of non-local traffic from, or to, the ILEC's PSTN

- They believe a declaratory order is needed now to ensure a level playing field for all providers of "voice telephone service"

- *BellSouth comments on the ICOs' Petition:* PSC should voluntarily abstain from devoting its resources to an exhaustive fact-finding inquiry and allow the FCC to complete its rulemaking