BellSouth Corporation
Suite 900
1133-21st Street, NW
Washington, DC 20036-3351

glenn.reynolds@bellsouth.com

Glenn T. Reynolds
Vice President -
Federal Regulatory

202 463 4112
Fax 202 463 4142

December 23, 2003

Ms Marlene H. Dortch
Secretary
Federal Communications Commission
445 12th Street, S.W.
Washington, D.C. 20554

Re: CC Docket 01-92

Dear Ms Dortch:

This is to inform you that on December 22, 2003, BellSouth met with Commission staff to respond to staff questions in connection with the Commission's rulemaking on *Developing a Unified Intercarrier Compensation Regime*. Commission staff attending the meeting were Tamara Preiss, Steve Morris, Jay Atkinson, Victoria Schlesinger, David Hu, Alvaro Gonzalez and Chris Barnekov of the Wireline Competition Bureau. Representing BellSouth at this meeting were Pete Martin, Parkey Jordan, Jane Raulerson, Jenny Kendall, Kathie Levitz and the undersigned.

This meeting was held for the sole purpose of responding to staff questions concerning BellSouth's network and the manner in which it interconnects with other carriers. BellSouth made no affirmative presentation at this meeting and any comments were consistent with its previous filings in this docket. The attached diagrams were distributed for demonstrative purposes.

Pursuant to Commission rules, please include a copy of this notice and attachment in the record of the proceeding identified above.

Sincerely,

Glen T. Reynolds

Glenn T. Reynolds

cc: Tamara Preiss
Steve Morris
Jay Atkinson
Chris Barnekov
Victoria Schlesinger
David Hu
Alvaro Gonzalez

Typical Interconnection Arrangements in Today's Environment

Disclaimer: The POI locations are for illustrative purposes only. POI locations may vary.

Version: 12-19-03

IXC & ILEC Traffic – Tandem Routed

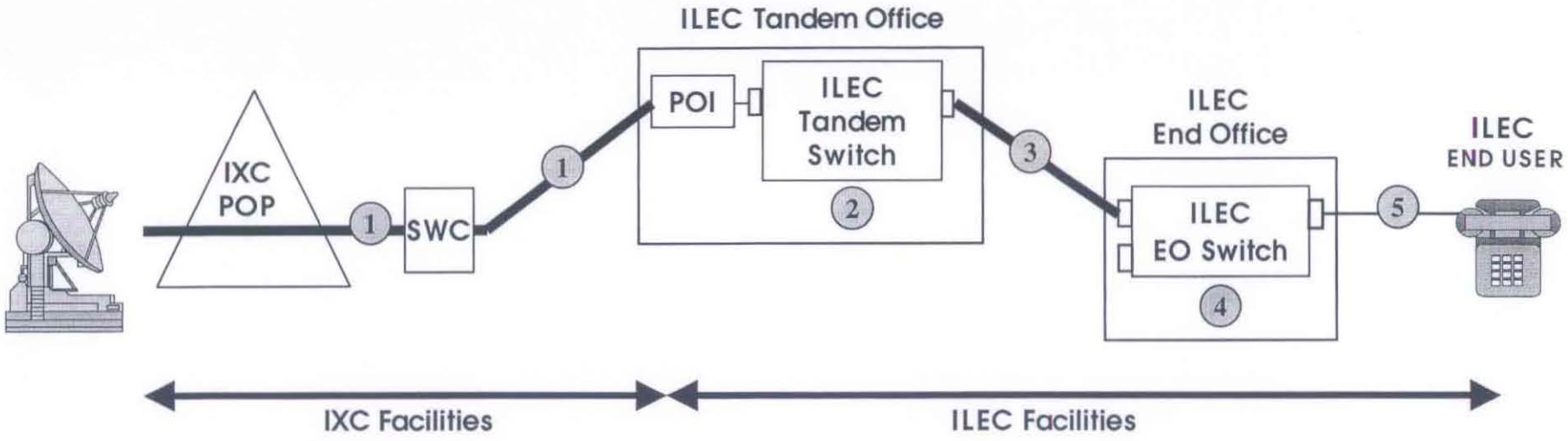

Financial Responsibility: IXC financially responsible for the cost of both directions of traffic from the ILEC end-user to IXC POP.

For Both Directions of Traffic

	NETWORK FUNCTION	PAID BY	PAID TO
1	Dedicated Transport	IXC	Dedicated Transport Provider*
2	Tandem Switching	IXC	ILEC
3	Common Transport	IXC	ILEC
4	End Office Switching	IXC	ILEC
5	Common Line	IXC	ILEC

*IXC may self-provision

IXC & ILEC Traffic - End Office Routed

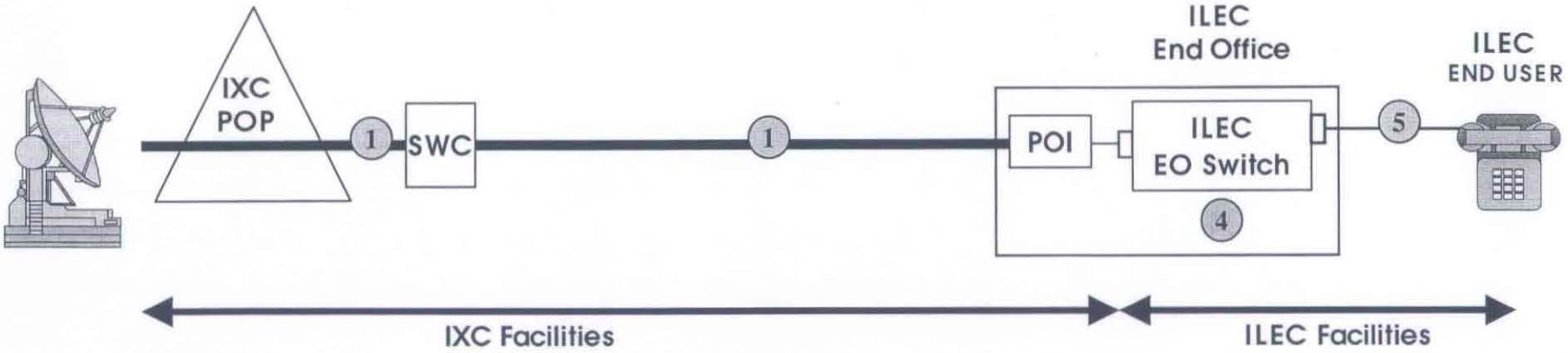

Financial Responsibility: IXC financially responsible for the cost of both directions of traffic from the ILEC end-user to IXC POP.

For Both Directions of Traffic

	NETWORK FUNCTION	PAID BY	PAID TO
1	Dedicated Transport	IXC	Dedicated Transport Provider*
4	End Office Switching	IXC	ILEC
5	Common Line	IXC	ILEC

*IXC may self-provision

ILEC to ILEC

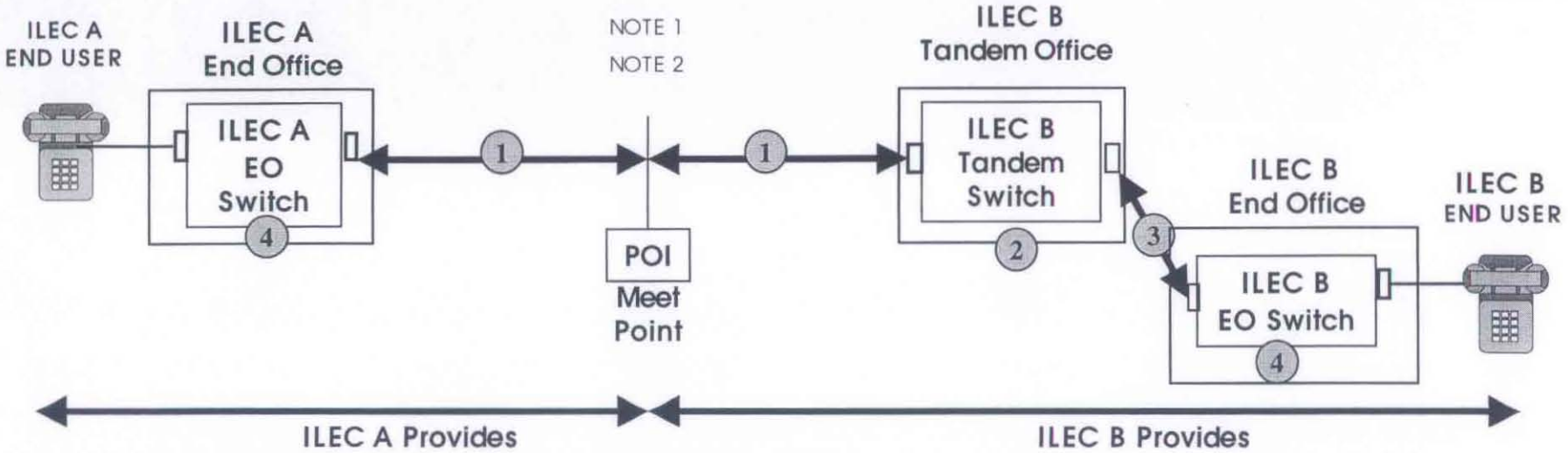

Financial Responsibility: Each company is responsible for facilities on its side of the POI or meet point. However, generally the Calling Party Network Pays (CPNP). However, varying rate structures lead to asymmetrical charges and transport obligations. Often times the compensation arrangement is bill and keep.

		Originating from ILEC A		Originating from ILEC B	
	NETWORK FUNCTION	**PAID BY**	**PAID TO**	**PAID BY**	**PAID TO**
1	Transport – jointly provisioned	Note 3	Note 3	Note 3	Note 3
2	Tandem Switching	ILEC A	ILEC B	N/A	N/A
3	Common Transport	ILEC A	ILEC B	N/A	N/A
4	End Office Switching	ILEC A	ILEC B	ILEC B	ILEC A

NOTE 1 – Carries traffic from a variety of carriers.

NOTE 2 – Separate facilities are established between the ICO and ILEC for carrying EAS type traffic.

Note 3 – Each ILEC provides facilities for both originating and terminating traffic to the POI or meet point.

CLEC & ILEC Traffic (tandem routed)

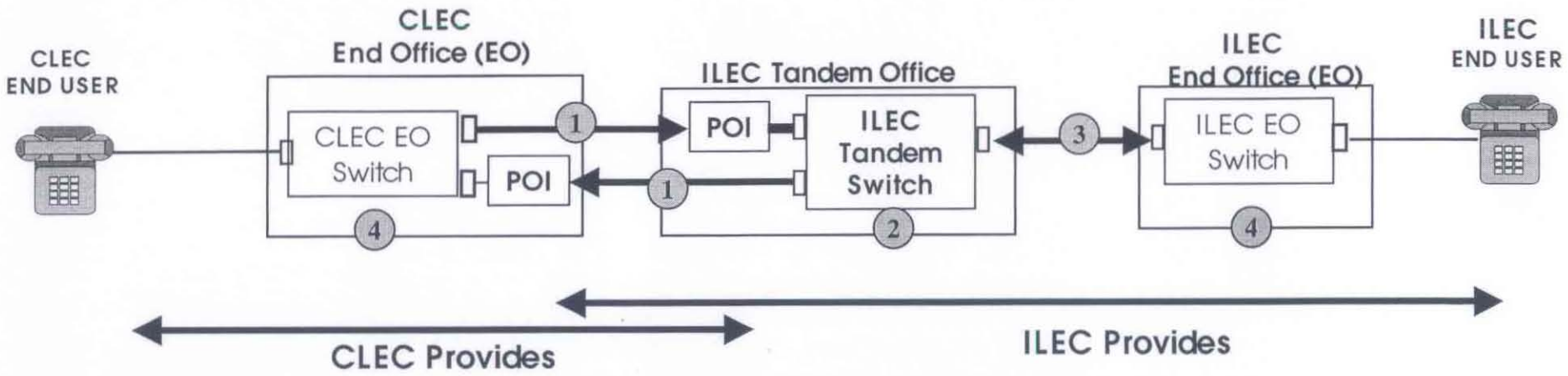

Financial Responsibility: CPNP

Area of Dispute: 1.) 51.711.A3 (application of tandem rate rule) 2.) Use of virtual NXX 3.) Network Function 1 may be subject of dispute regarding both physical & financial responsibility

		Originating from CLEC		Originating from ILEC	
	NETWORK FUNCTION	**PAID BY**	**PAID TO**	**PAID BY**	**PAID TO**
1	Dedicated Transport	CLEC	Dedicated Transport Provider*	ILEC	CLEC
2	Tandem Switching	CLEC	ILEC	N/A	N/A
3	Common Transport	CLEC	ILEC	N/A	N/A
4	End Office Switching	CLEC	ILEC	ILEC	CLEC

*CLEC may self-provision

CLEC to CLEC Traffic

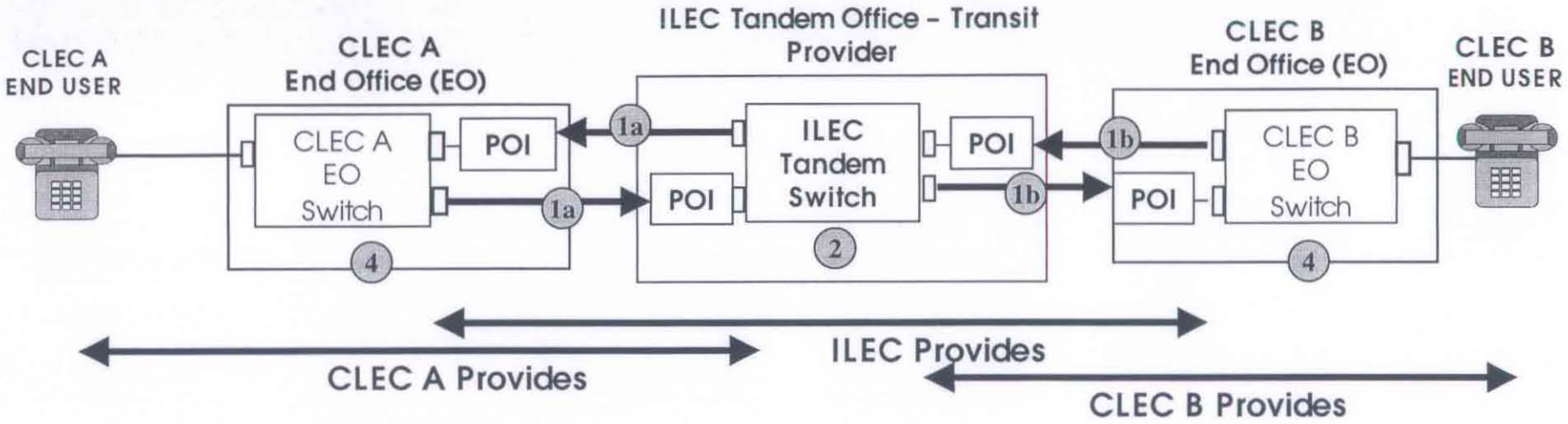

Financial Responsibility: CPNP governs traffic exchange. Originating carrier pays ILEC for transit service. Switching and transport (excluding ILEC switching and transport)is typically bill & keep.

Area of Dispute:. Network Function 1a & 1b may be subject of dispute regarding both physical & financial responsibility

		Originating from CLEC A		Originating from CLEC B	
	NETWORK FUNCTION	**PAID BY**	**PAID TO**	**PAID BY**	**PAID TO**
1	Dedicated Transport	a) CLEC A b) CLEC A	a) CLEC A or ILEC b) CLEC B	a) CLEC B b) CLEC B	a) CLEC A or ILEC b) CLEC B or ILEC
2	Tandem Switching	CLEC A	ILEC	CLEC B	ILEC
4	End Office Switching	CLEC A	CLEC B	CLEC B	CLEC A

Independent Company (ILEC Tandem Routed) & CLEC

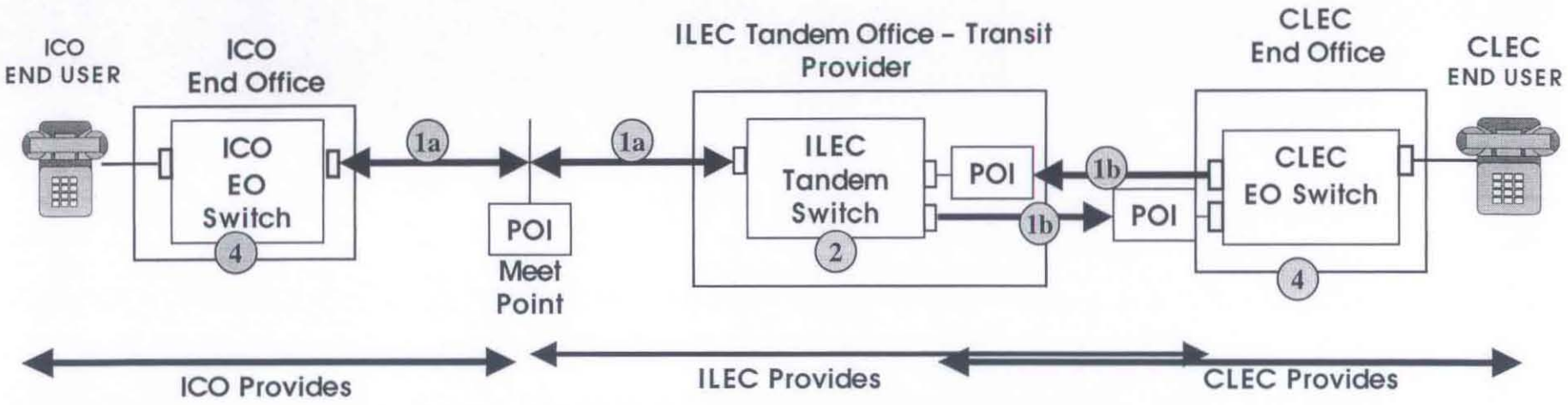

Financial Responsibility: The ILEC and ICO are responsible for facilities on its side of the POI or meet point. CPNP for transit, transport and End Office switching.

Area of Dispute: 1.) ICOs dispute that they are obligated to pay for transiting of calls beyond the meet point because they believe the POI needs to be on ICO's network. 2.) Network Function 1b may be subject of dispute regarding both physical & financial responsibility

		Originating from ICO		Originating from CLEC	
	NETWORK FUNCTION	**PAID BY**	**PAID TO**	**PAID BY**	**PAID TO**
1	Transport a.) jointly provisioned b.) dedicated	a) ICO b) ICO	a) ILEC* b) CLEC or ILEC	a) CLEC b) CLEC	a) ILEC & ICO b) CLEC or ILEC
2	Tandem Switching	ICO	ILEC	CLEC	ILEC
4	End Office Switching	ICO	CLEC	CLEC	ICO

* ICO will provide facilities to the meet point and ILEC will charge the ICO for facilities from meet point to the tandem.

Independent Company (ILEC Tandem Routed) & IXC

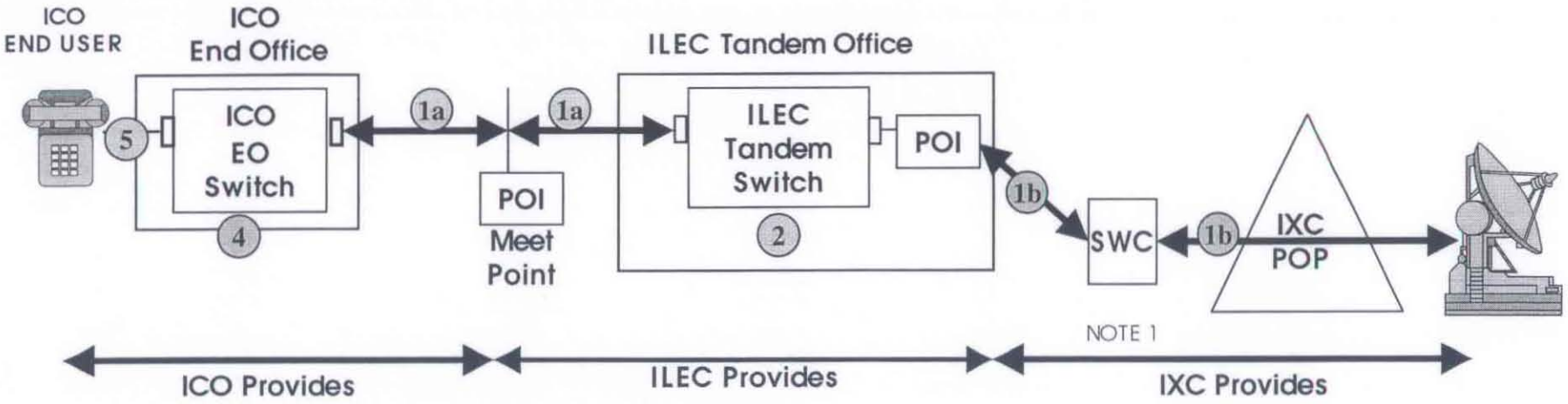

Financial Responsibility: Each company is responsible for facilities on its side of the POI or meet point. IXC financially responsible for traffic in both directions from the ICO End User to IXC POP.

For Both Directions of Traffic

.	NETWORK FUNCTION	PAID BY	PAID TO
1	Transport a.) jointly provisioned b.) dedicated	a) IXC b) IXC*	a) ICO & ILEC b) Dedicated Transport Provider*
2	Tandem Switching	IXC	ILEC
4	End Office Switching	IXC	ICO
5	Common Line	IXC	ICO

* IIXC may self-provision

NOTE 1 – The most typical arrangement would be for the IXC to direct route to the ICO where traffic volumes warrant such direct connection.

Independent Company (ILEC Tandem Routed) & CMRS Provider (IntraMTA traffic)

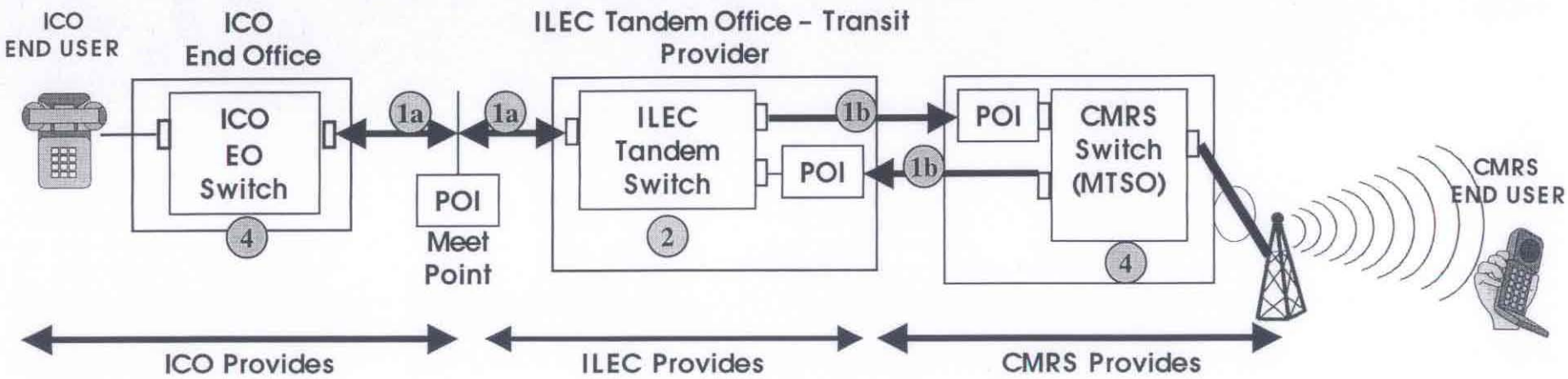

Financial Responsibility: Each company is responsible for facilities on its side of the POI or meet point. The financial responsibility is CPNP for IntraMTA.

Area of Dispute: 1.) What traffic is subject to reciprocal compensation (intraMTA)? 2.) Do access charges apply to CMRS providers? 3.) Who should pay for transiting function provided by the ILEC? 4.) ICOs dispute that they are obligated to pay for transiting of calls beyond the meet point. 5.) Network Function 1a may be subject of dispute regarding physical & financial responsibility. 6.) Disputes surrounding separate rating & routing points for NXXs

		Originating from ICO		Originating from CMRS	
	NETWORK FUNCTION	PAID BY	PAID TO	PAID BY	PAID TO
1	Transport a.) jointly provisioned b.) dedicated	a) Note 1 b) CMRS	a) Note 1 b) ILEC	a) CMRS b) CMRS	a) ICO & ILEC b) CMRS or ILEC
2	Transit Charge	ICO	ILEC (As it should be)	CMRS	ILEC
3	Reciprocal Compensation	b) ICO	b) CMRS (As it should be)	a) CMRS	a) ICO

Note 1: Each party responsible for the costs of facilities on its side of the POI.

Independent Company to CMRS Carrier Routed via an IXC (IntraMTA traffic)

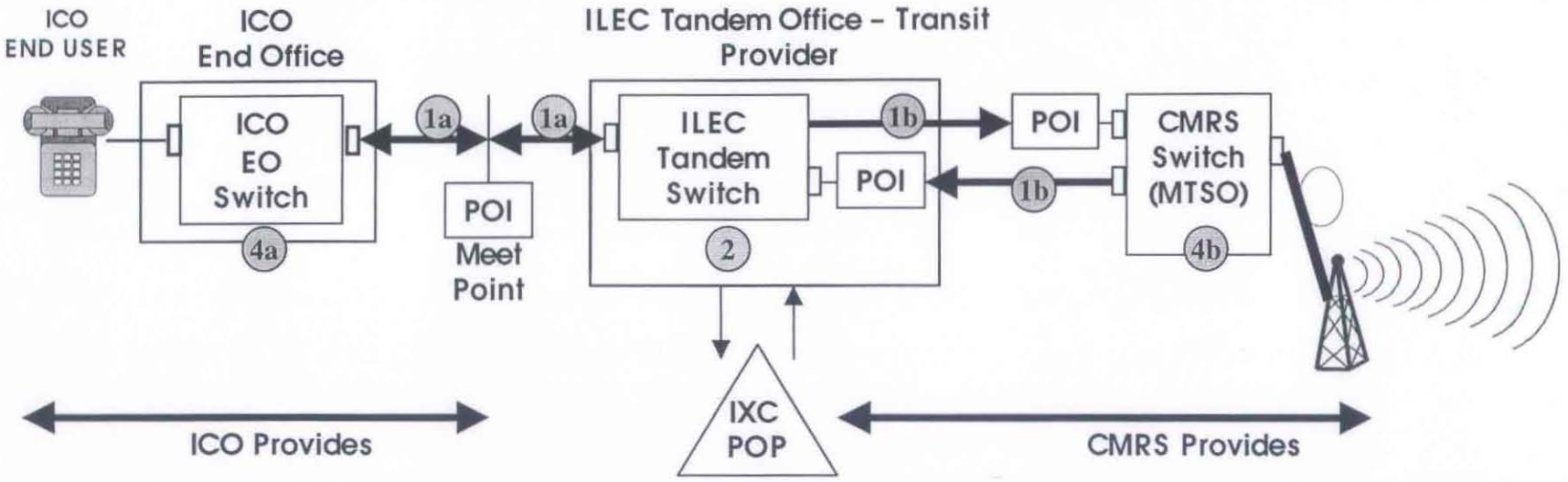

Area of Dispute: ICOs often contest any obligation to deliver traffic outside their exchange boundary. As a result they will send traffic destined to a CMRS carrier via an IXC. In this circumstance, disputes arise over the appropriate compensation regime to be applied (access or reciprocal compensation) and which carrier bears financial responsibility for terminating the call, including transit.

Note 1: CMRS carriers receive no compensation from interconnecting carriers for MTSO switching.)

Originating from ICO

	NETWORK FUNCTION	PAID BY	PAID TO
1	Transport a.) jointly provisioned b.) dedicated	a) IXC b) IXC	a) ILEC & ICO b) ILEC or CMRS
2	Tandem Switching	IXC	ILEC
4	Switching a) End Office b) MTSO Switching	a) IXC b) Note 1	a) ICO b) Note 1

CMRS Carrier & ILEC (IntraMTA traffic)

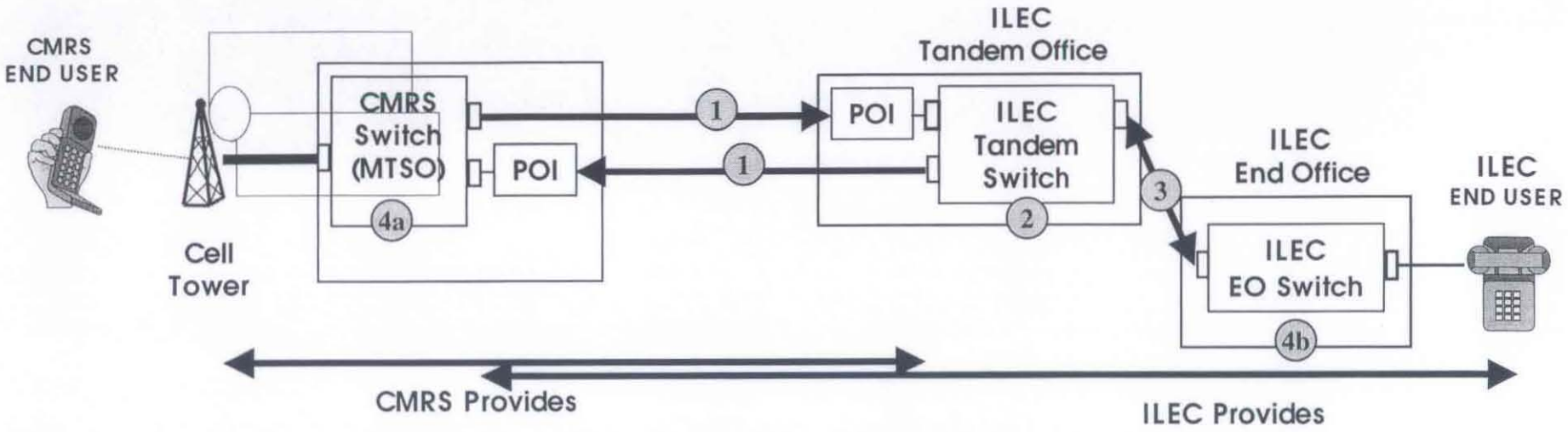

Financial Responsibility: CPNP for traffic originating and terminating within the same MTA.

		Originating from CMRS		Originating from ILEC	
	NETWORK FUNCTION	PAID BY	PAID TO	PAID BY	PAID TO
1	Transport	CMRS*	ILEC or CMRS*	ILEC*	CMRS or ILEC*
2	Reciprocal Compensation	CMRS	ILEC	ILEC	CMRS

* Typically, the ILEC will provision the facility and charge the CMRS provider based on the percent of the facility used.

CMRS Carrier & Other Carriers (CMRS & CLECS)

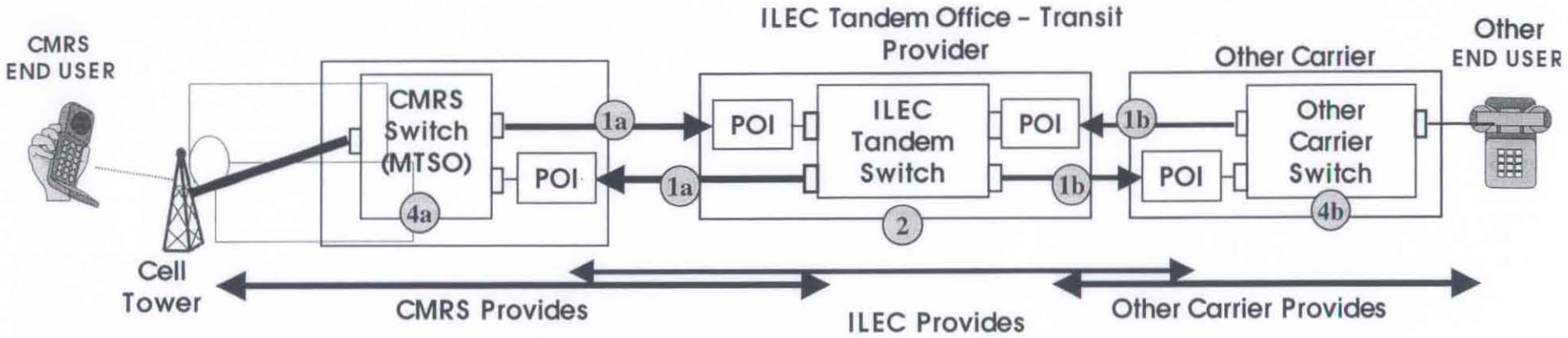

Financial Responsibility: CPNP for traffic subject to reciprocal compensation. Switching and transport (excluding ILEC switching and transport)is typically bill & keep.

Area of Dispute: 1.) What traffic is subject to reciprocal compensation (intraMTA)? 2.) What rate applies to traffic? 3.) Network Function 1b may be subject of dispute regarding both physical & financial responsibility.

		Originating from CMRS		Originating from Other	
	NETWORK FUNCTION	**PAID BY**	**PAID TO**	**PAID BY**	**PAID TO**
1	Transport	a) CMRS b) Other	a) ILEC b) OTHER or ILEC	a) OTHER b) OTHER	a) CMRS or ILEC b) OTHER or ILEC
2	Transit	CMRS	ILEC	OTHER	ILEC
3	Reciprocal Compensation	b) CMRS	b) OTHER	a) OTHER	a) CMRS

FB-CLEC Use Of NXX Codes For InterLATA Traffic

Diagram depicting how the CLECs are using their NXXs as "virtual" NXXs:

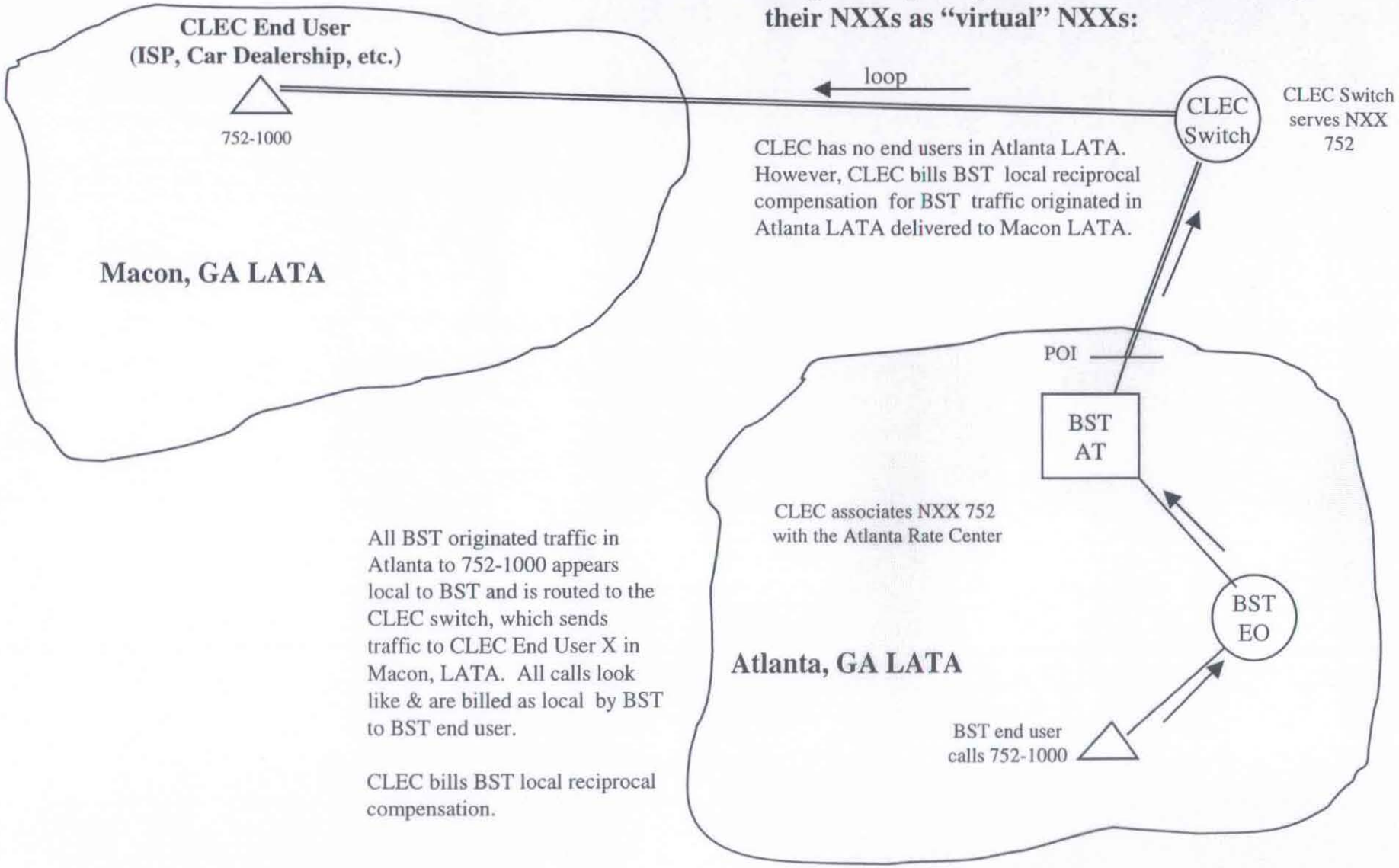

All BST originated traffic in Atlanta to 752-1000 appears local to BST and is routed to the CLEC switch, which sends traffic to CLEC End User X in Macon, LATA. All calls look like & are billed as local by BST to BST end user.

CLEC bills BST local reciprocal compensation.