Karen Brinkmann
Direct Dial: 202-637-2262
karen.brinkmann@lw.com

LATHAM & WATKINS LLP

555 Eleventh Street, N.W., Suite 1000
Washington, D.C. 20004-1304
Tel: (202) 637-2200 Fax: (202) 637-2201
www.lw.com

FIRM / AFFILIATE OFFICES

Boston	New Jersey
Brussels	New York
Chicago	Northern Virginia
Frankfurt	Orange County
Hamburg	Paris
Hong Kong	San Diego
London	San Francisco
Los Angeles	Silicon Valley
Milan	Singapore
Moscow	Tokyo
	Washington, D.C.

March 31, 2004

Marlene Dortch, Secretary
Federal Communications Commission
445 Twelfth Street, SW
Washington, DC 20554

Re: Notice of *Ex Parte* Presentation in CC Dockets 96-45, 98-170, 98-171, 92-237, 90-571, 99-200, 95-116, 02-33, and 01-337; WC Dockets 03-211, 03-45, and 02-361

Dear Ms. Dortch:

Yesterday John Jones and Tim Walden of CenturyTel, Inc. and I made a presentation to Chief of Staff Bryan Tramont, touching upon issues raised in each of above-captioned dockets. CenturyTel urged expeditious denial of AT&T's VOIP petition, expressed support for expanding the base of contributors to universal service, and urged that Commission actions affecting advanced services be taken in such a manner as to preserve and promote affordable broadband services in rural areas, of which CenturyTel is a premier provider. The attached materials summarize CenturyTel's points. Please direct any questions concerning this matter to me.

Very truly yours,

Karen Brinkmann

Enclosure

cc: Bryan Tramont, Chief of Staff
Office of Chairman Powell

Broadband Network Investment

"Communication Solutions to Rural America"

Prepared by Tim Walden
March 30, 2004

CenturyTel 's Network Focus

- CenturyTel Is Focused On:
  - Expanding Broadband Network Objectives In Existing Markets
  - Enhancing Network Quality and Operational Efficiencies
  - A Disciplined Network Infrastructure Program
  - Extending Deployment of Advanced Services to New Markets

CENTURYTEL

CenturyTel – Today's Voice and Data Network

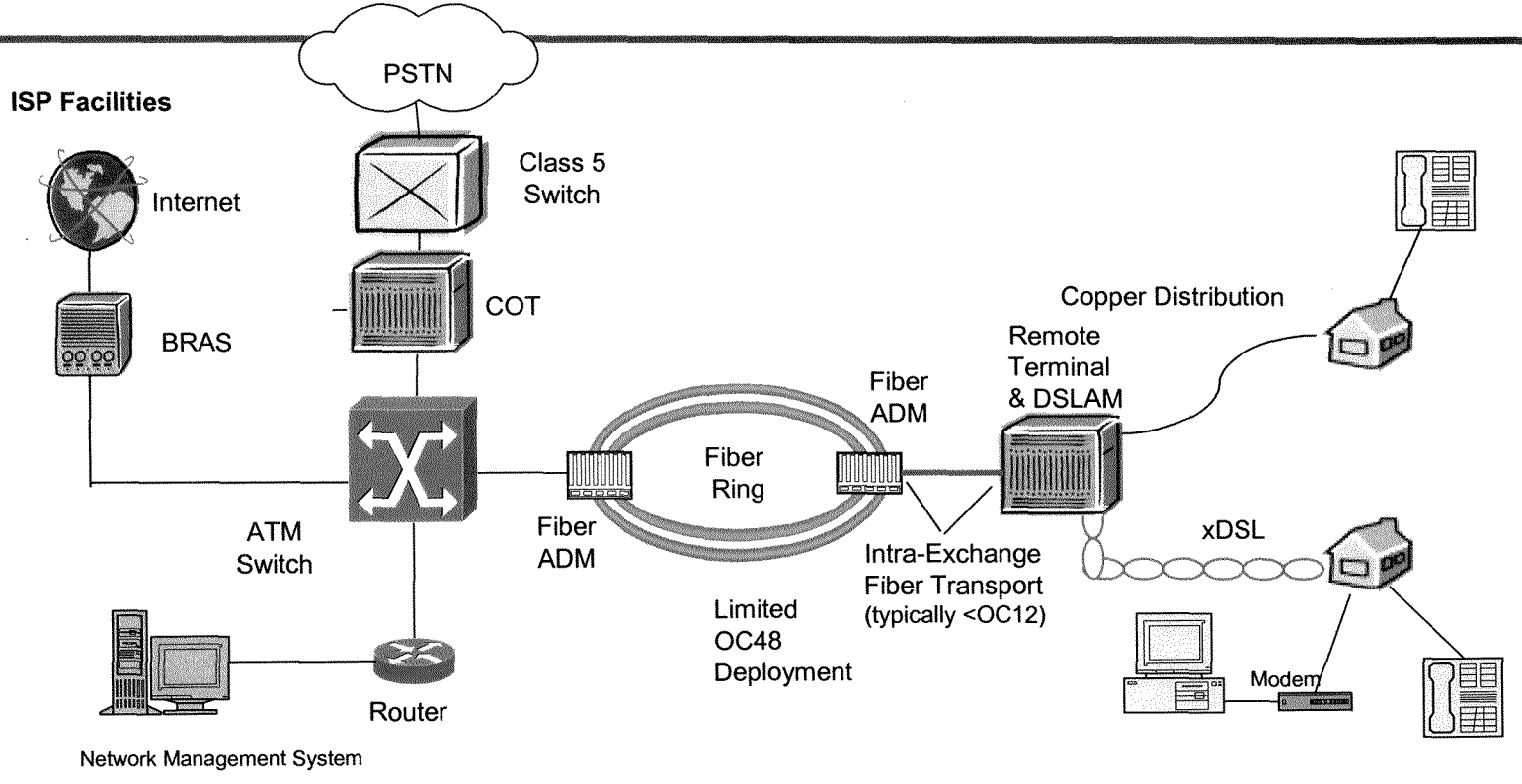

ISP Integration	Intra-Exchange Network	Fiber Transport	Local Distribution Network	Home Network

CENTURYTEL

CenturyTel - Broadband Access Evolution

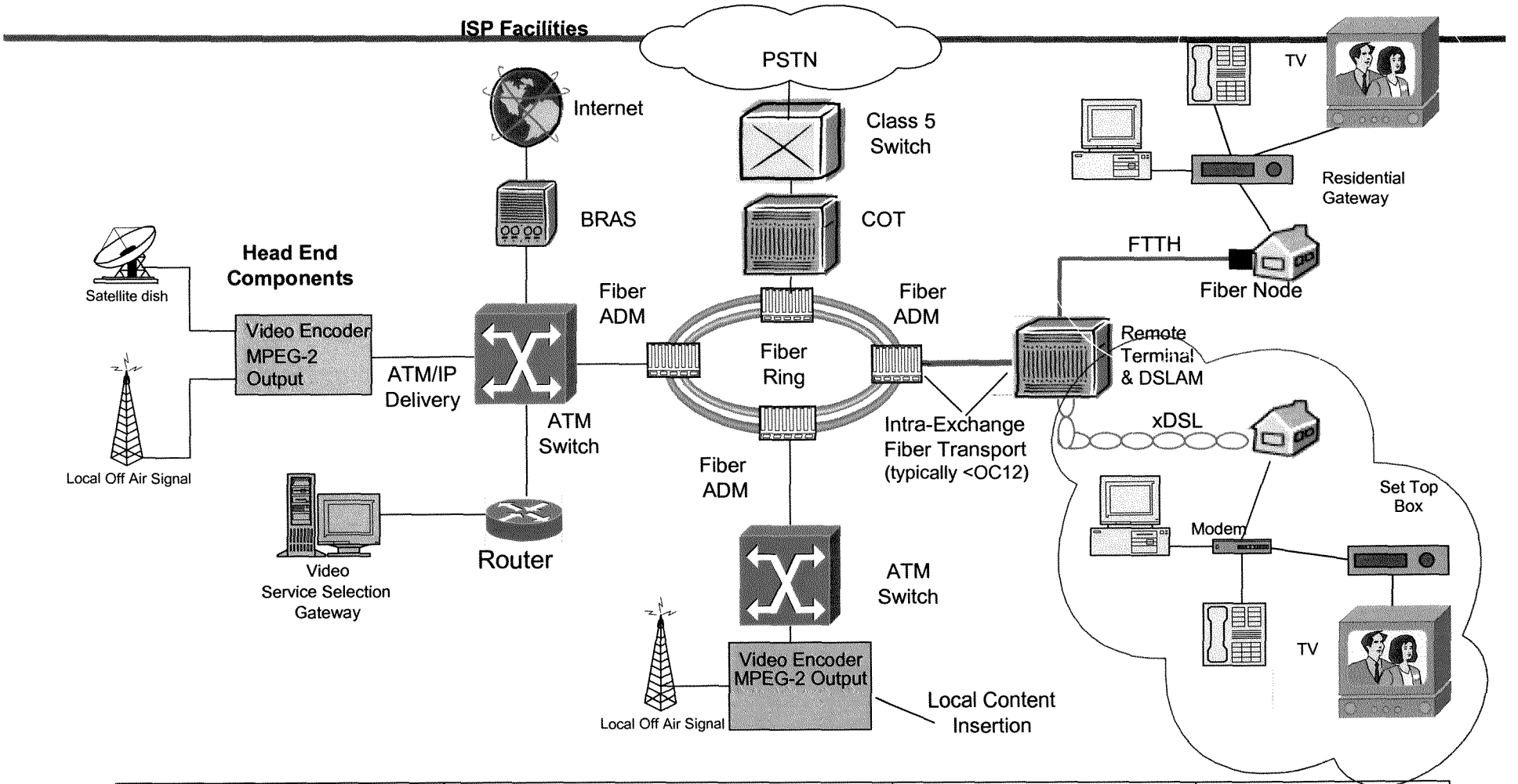

Regional Head End National Content Acquisition	Inter-Exchange Network	Intra-Exchange Network	Home Network

CENTURYTEL

VoIP Enterprise Networks – Voice and Data

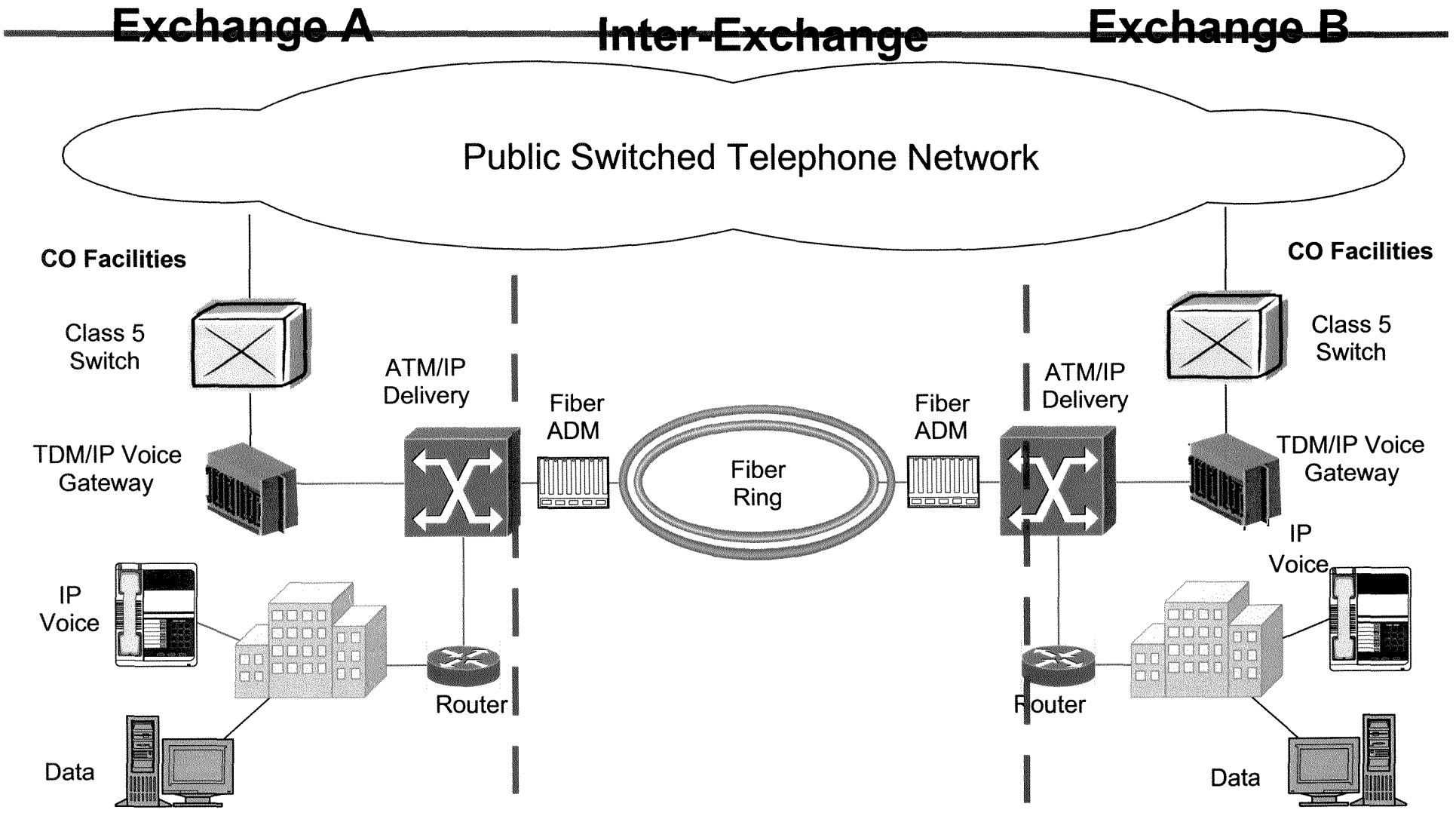

CENTURYTEL

Broadband Initiative – Where We Are Going

	Goal	YE 2001	YE 2002	YE 2003
• RT Miles Fiber	10,000	10,630	15,126	15,886
• DSL-capable A/L	1.6 million	1.1 million	1.2 million	1.5 million
• DSL-Exchanges	400	458	588	641
• ATM/IP switches	50	50	56	56
• C.B.G.s*	3,050	4,265	4,434	4,434
• STPs	6 pairs	4 pairs	6 pairs	6 pairs
• BB Loops (<12Kft)	85%	65%	65%	65%

*Community Broadband Gateways

CENTURYTEL

Major VoIP Implications

Security

CALEA (wiretap) compliance should be considered for all communications service providers - especially in this era of heightened security.

Public Safety & Access

- VoIP service providers must be expected to work with public safety administrators for E911availability.
- Access for individuals with disabilities may be an issue in VoIP offerings.
- Reliability may be a major concern with some VoIP services due to power requirements.

Universal Service

- VoIP is one of several factors leading to an erosion of interstate telecom revenues.
- Current proposals to assess service providers on a 'per connection' or 'per phone number' basis must be examined for their possibly disparate impact on end-users.

Inter-Carrier Compensation –

VOIP threatens current per-minute inter-carrier compensation arrangements.

Government Funds

- Federal, State & Local tax jurisdiction issues.
- Today, service providers are characterizing their services as interstate or intrastate, enhanced vs. basic.
- Not surprisingly, providers often choose the status with the least regulatory and/or tax burden.
- "Self-help" should not be tolerated.
- Clarity of rules and consistency of enforcement is required.

Advanced Telecom Capability in CenturyTel Markets: Yesterday, Today and Tomorrow

- **Proven**
  - Progressive Network Deployments
  - 100% Digital 1992
  - 100% one Party 1992
  - NGDLC Deployments
  - Carrier Serving Areas
- **Positioned**
  - 67% DSL Availability
  - 65% Loops < 12KFT
  - 11,000 Rte Miles Fiber
  - 100% CLASS Capable
  - Over 4200 CBGs*
- **Prepared**
  - SS7 Gateway Network
  - Centralized Network Management
  - ATM/FR Network
  - Broadband Network
  - Segmented Network Elements

* Community Broadband Gateways

CENTURYTEL

Summary

1. CenturyTel is a facilities-based broadband provider ensuring access to advanced telecommunications capability in rural markets.

2. In order to continue to promote a high level of investment in rural markets, carriers such as CenturyTel require Federal support that is sufficient and predictable.

3. Spread of VOIP technology should not be allowed to threaten rural connectivity and access to advanced services.

4. FCC policies must be service-provider neutral – consistent rules for comparable services in comparable areas, regardless of who the provider is.

CENTURYTEL