vidi
DVD+RW
Copy Protection

The Vidi Recordable DVD Protection System

Broadcast Flag Certification

April 1, 2004

PHILIPS

hp invent

HP and Philips: Joint Development of Vidi

vidi
DVD+RW
Copy Protection

- HP and Philips are two of the initial developers of the DVD+RW formats, including DVD+RW, DVD+R and DVD+R Double Layer
- Vidi was designed to allow recording of digital broadcast content, consistent with the FCC's Broadcast Flag rules, using the DVD+RW format
- HP and Philips jointly developed the technology and defined the licensing terms for Vidi

Vidi Meets the FCC's Broadcast Flag Goals

vidi
DVD+RW
Copy Protection

- Vidi prevents indiscriminate redistribution of digital broadcast content over the Internet
  - Superior protection using state-of-the-art security
- Vidi preserves consumers' use and enjoyment of DTV
  - Preserves viability of legacy equipment & content libraries
- The Vidi license construct fosters competition
  - Reasonable and nondiscriminatory terms

Vidi: Proposed Authorized Recording Method

vidi
DVD+RW
Copy Protection

- Vidi is an encryption-based technology that protects digital broadcast content from indiscriminate redistribution over the Internet when stored on DVD (+R/+RW)
  - Vidi binds BF protected content to a particular blank disc
  - Permits playback on licensed recorders and players
  - Permits digital output via all FCC-approved output technologies
  - Permits further recording using any FCC-authorized recording method

Creation of a Vidi Recording

vidi
DVD+RW
Copy Protection

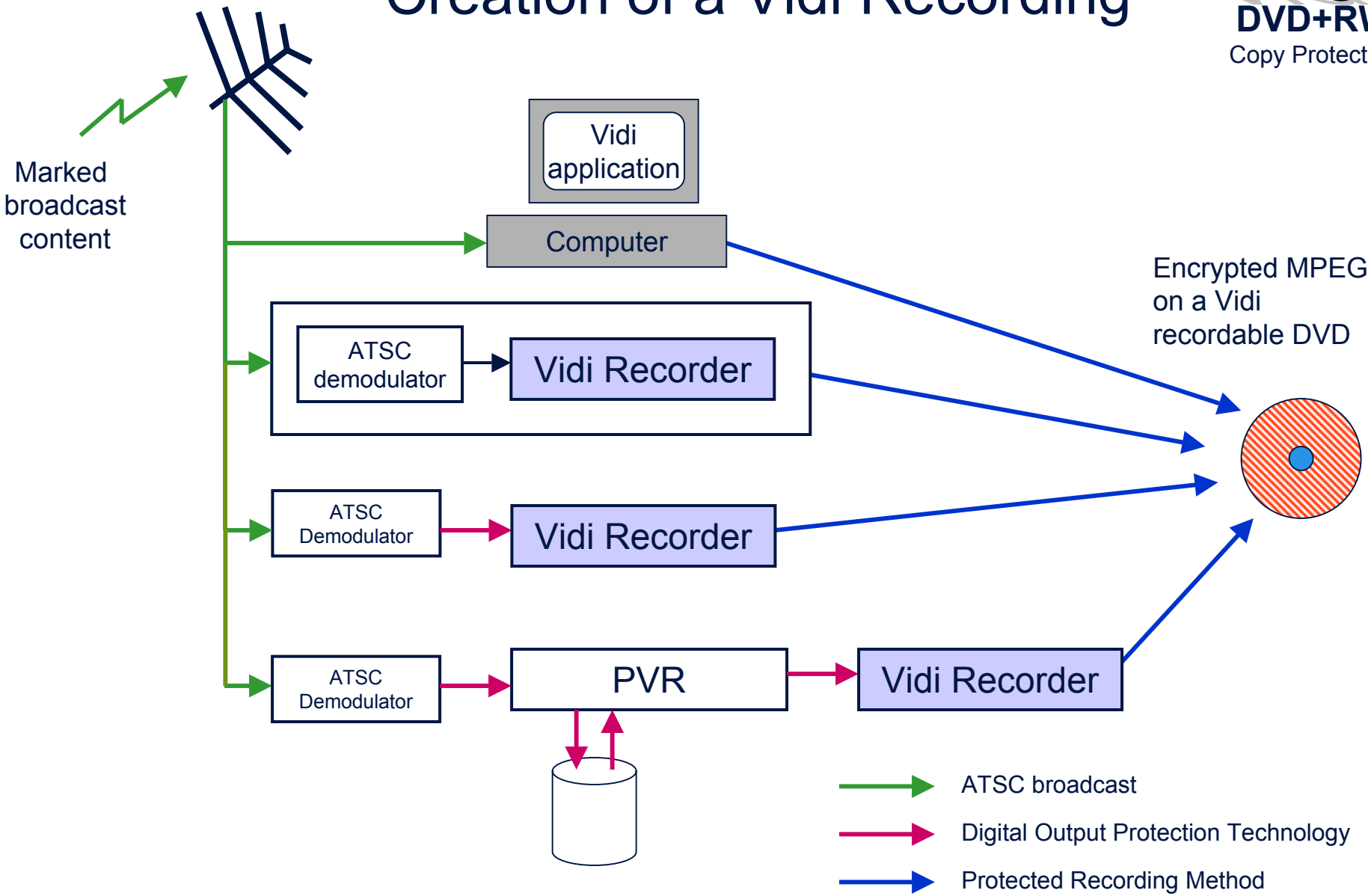

Use of Vidi Recording

vidi
DVD+RW
Copy Protection

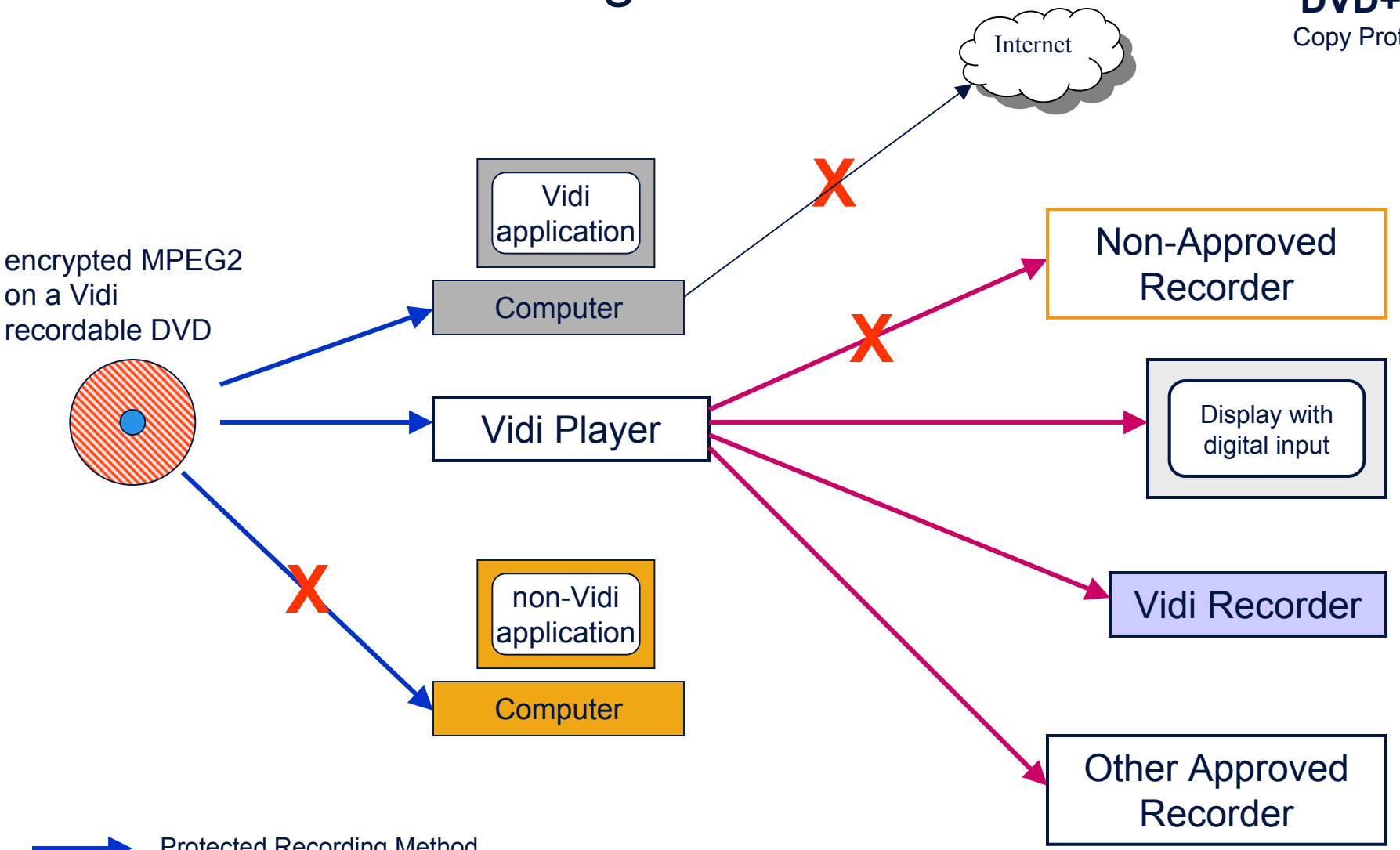

Protected Recording Method

Digital Output Protection Technology

How does Vidi protect a recording?

vidi
DVD+RW
Copy Protection

- Encrypt the video data on the Vidi disc
- Bind the encrypted video to the Vidi disc
- Make the decryption key available only to compliant applications and devices

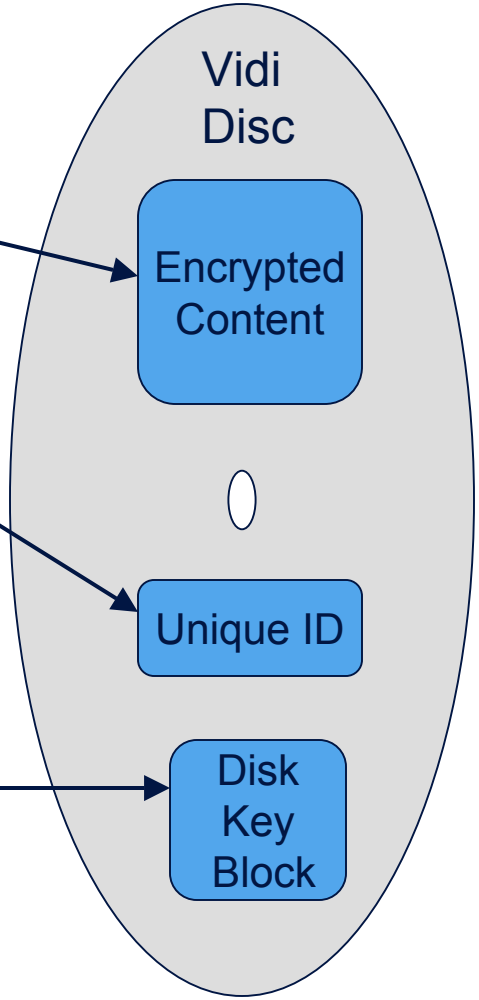

Overview: Vidi CE Device

vidi
DVD+RW
Copy Protection

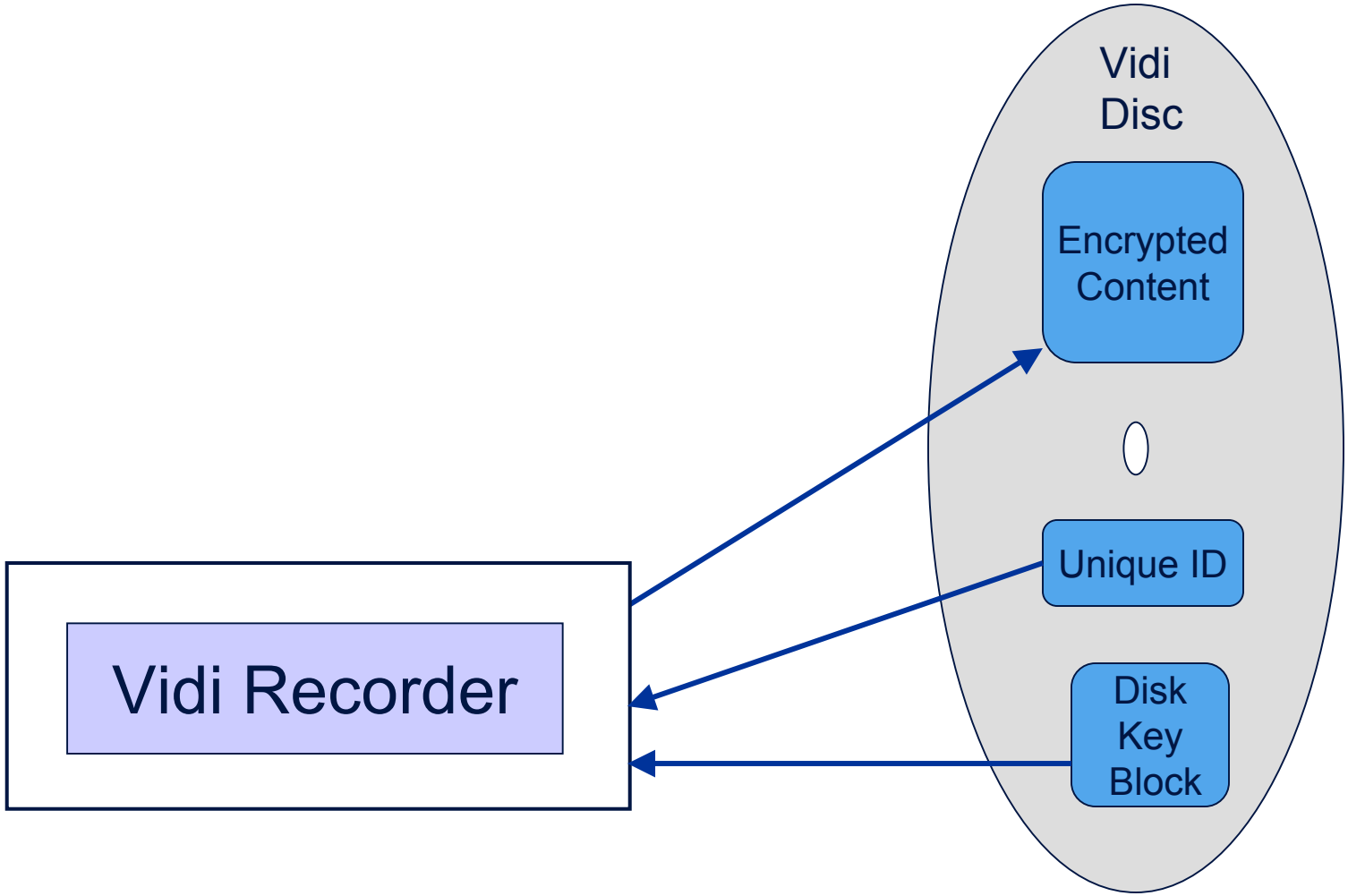

Vidi disc authenticates Vidi device

Overview: Vidi on a Computer

vidi
DVD+RW
Copy Protection

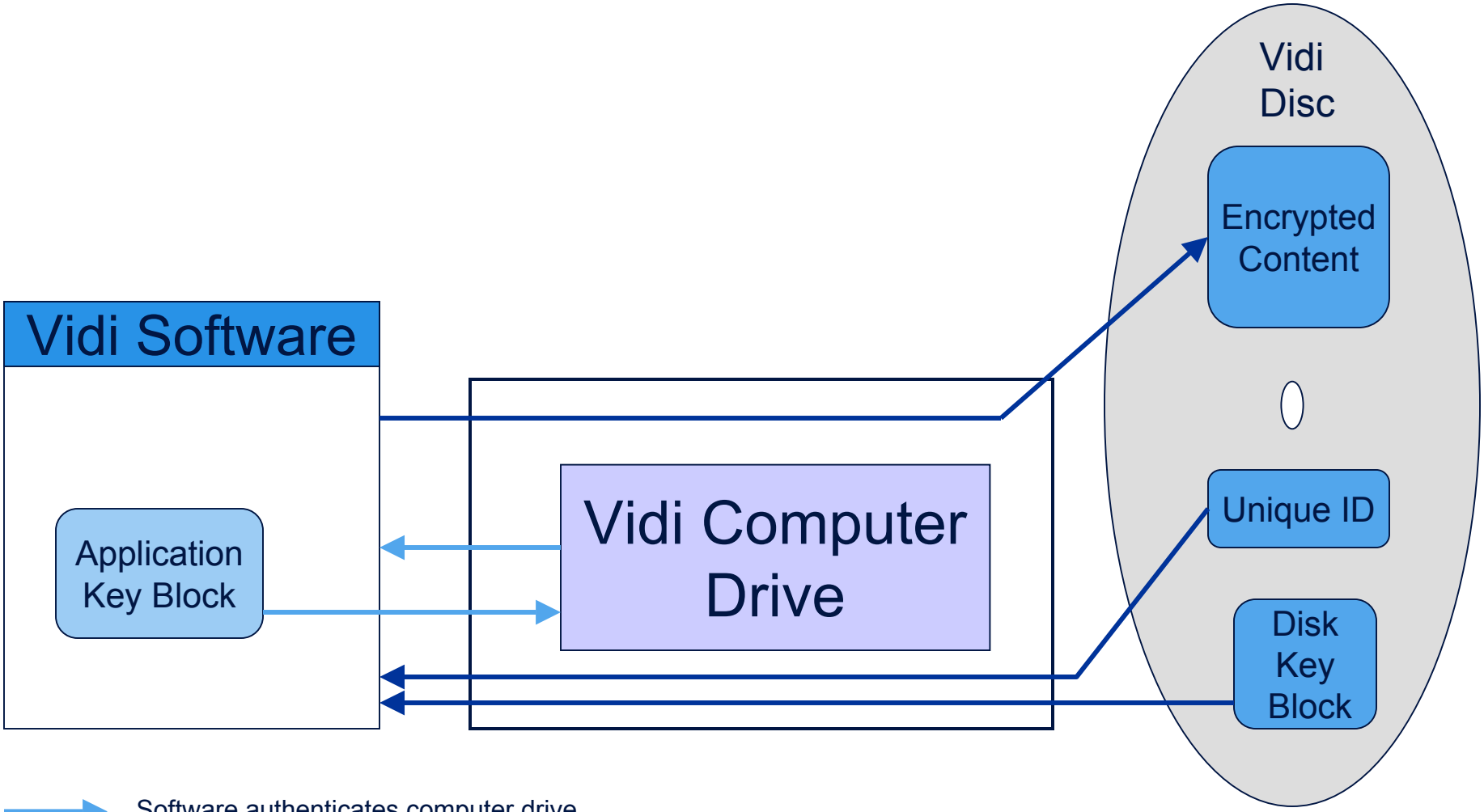

Software authenticates computer drive

Vidi disc authenticates Vidi software application

Outstanding Protection for Digital Content

vidi
DVD+RW
Copy Protection

- State-of-The-Art Protection Technology
  - Based on the Advanced Encryption Algorithm (AES)
    - Extensive peer review
    - Efficiently implemented in hardware and software
    - Accepted by NIST and used extensively worldwide
    - 128 bit key – future proof
  - Suitable for implementation in PCs
    - PC drives are issued with individual keys that can be revoked
      - Enables recovery from circumvention using emulation techniques
  - Redundant checks
    - Prevent tampering with EPN status
      - EPN state cannot be easily stripped
    - Recorders detect tampering with discs before making a recording

Resistant to Known Attacks

vidi
DVD+RW
Copy Protection

- Bit-by-bit disc copy
- Emulation of Vidi-capable computer drive
- Revelation of system secrets
- Cryptographic attack
- Software player compromise
- Protects against a DeCSS-like attack

Outstanding Renewability & Revocation

vidi
DVD+RW
Copy Protection

- Effective, Continual Renewability
  - All secret elements in the system can be renewed
    - Protection resides in hardware, media and software
    - The system can recover from an attack of any component
    - No global secrets
- Effective Revocation of compromised devices and software
  - Cloned devices identified and rejected
  - Highly effective revocation for software implementations
    - Advanced PC authentication protocol
    - “Active defense” against attacks
- Renewal/revocation procedures invisible to law-abiding consumers
  - Uncompromised hardware devices are unaffected
    - Ability to upgrade software minimizes consumer impact

Outstanding Interoperability

vidi
DVD+RW
Copy Protection

- Completely Interoperable With All FCC-Approved Broadcast Flag Technologies
  - Two Components of Interoperability:
    - Technical
      - Not difficult – marked content is protected, unmarked content is not
      - Marked content is always decrypted for use so it can easily be handed off to another FCC-approved technology
    - License Rules
      - Vidi allows output via all FCC-approved technologies and accepts input from all FCC-approved technologies

Preservation of Consumers' Use and Enjoyment of DTV

vidi
DVD+RW
Copy Protection

- Vidi preserves consumers' ability to record DTV programming with compliant devices
- Vidi preserves viability of legacy equipment and content
  - Blank Vidi media can be used by older recorders
  - Vidi devices play legacy unencrypted recordings
  - Protected and non-protected recordings may co-exist on the same Vidi disc

Licensing That Preserves Competition

vidi
DVD+RW
Copy Protection

- Vidi is available on reasonable and nondiscriminatory terms
- Implementers are not required to forfeit their own IP without compensation under a non-assert.
  - A licensee is required to license its IP on reasonable and nondiscriminatory terms
- Accepts <u>all</u> FCC-approved Broadcast Flag technologies as input
- Allows output to <u>all</u> FCC-approved Broadcast Flag technologies

Licensing That Preserves Competition

vidi
DVD+RW
Copy Protection

- The Vidi license permits only very limited changes
  - Changes require an open process that includes both content participants and implementers
- Vidi licensing will be transparent and consistent from one licensee to the next, and will ensure that all licensees benefit from the same favorable terms

Licensing That Preserves Protection

vidi
DVD+RW
Copy Protection

- Compliance rules applicable to digital broadcast content are modeled closely after the FCC regulation

- Strong enforcement provisions, including both liquidated damages and third party beneficiary rights for content participants

PHILIPS

hp®

invent