Broadcast Flag Copy Protection Revocation
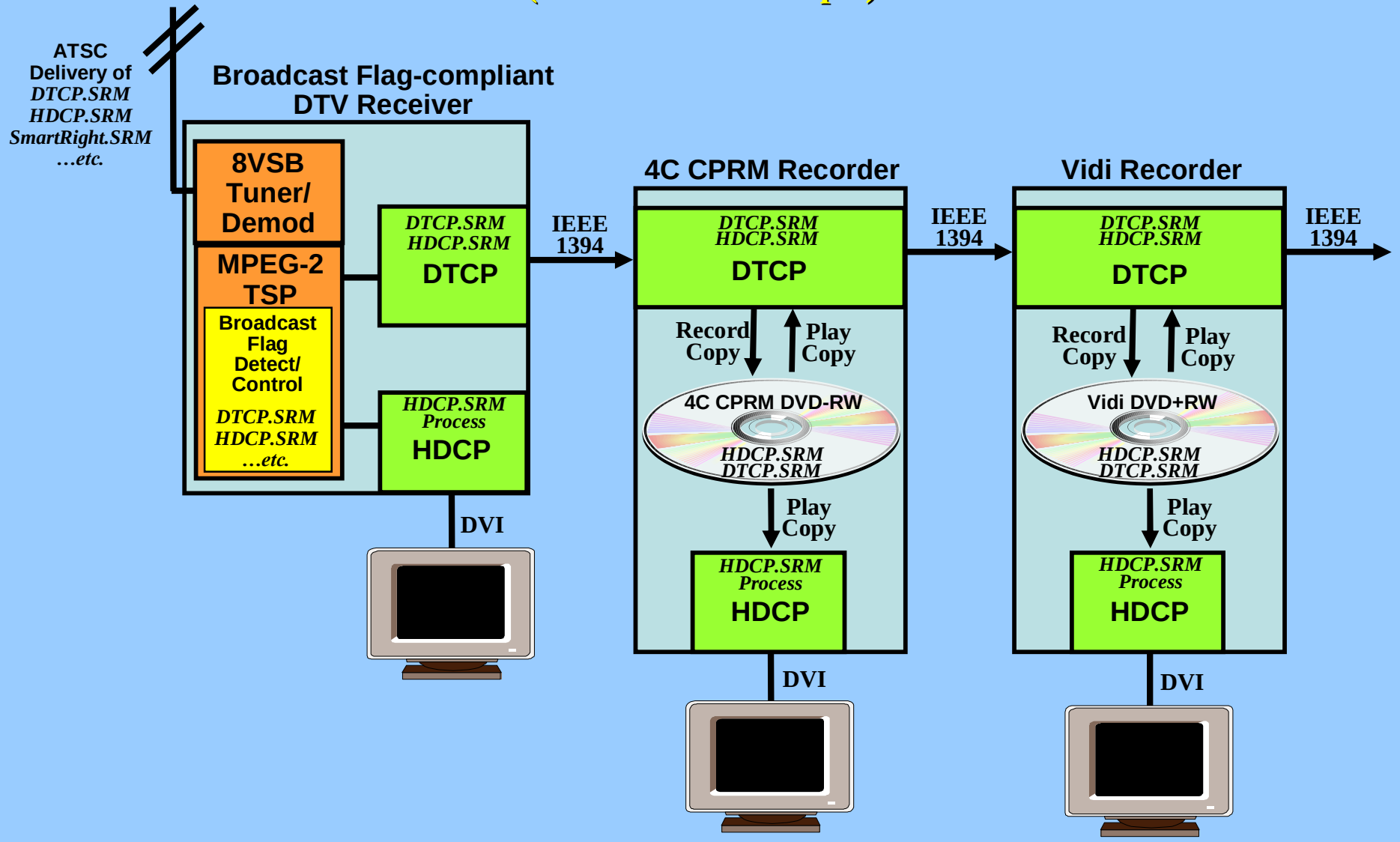
(Informative Example)