SWIDLER BERLIN SHEREFF FRIEDMAN, LLP

THE WASHINGTON HARBOUR
3000 K STREET, NW, SUITE 300
WASHINGTON, DC 20007-5116
TELEPHONE (202) 424-7500
FACSIMILE (202) 424-7643
WWW.SWIDLAW.COM

CATHERINE WANG
TELEPHONE: (202) 424-7837
FACSIMILE: (202) 424-7645
CWANG@SWIDLAW.COM

NEW YORK OFFICE
THE CHRYSLER BUILDING
405 LEXINGTON AVENUE
NEW YORK, NY 10174
TELEPHONE (212) 973-0111
FACSIMILE (212) 891-9598

August 5, 2004

VIA ELECTRONIC FILING

Marlene H. Dortch
Secretary
Federal Communications Commission
445 12th Street, S.W.
Washington, DC 20554

Re: **NOTICE OF *EX PARTE* MEETING**
ET Docket No. 04-186

Unlicensed Operation into the TV Broadcast Bands

Dear Ms. Dortch:

On August 4, 2004, an *ex parte* meeting was held in the above-captioned docket between representatives of Shure, Inc. ("Shure") and the staff of the Commission's Office of Engineering and Technology. In attendance were, from Shure, Inc., Jeff Krull, Vice President Engineering, Ahren Hartman, Principal Engineer, Advanced Development, Edgar Reihl, P.E., Principal Engineer, Advanced Development, Sandy Schroeder, Director, Corporate Market Development, Catherine Wang of Swidler Berlin Shereff Friedman, outside counsel to Shure, and from the Office of Engineering and Technology Ed Thomas, Alan Scrimes, and Karen Rackley.

During this meeting, we discussed how unlicensed device operation in the TV bands as proposed in this proceeding presents significant potential harmful interference to wireless microphones and similar audio products. Absent meaningful interference mitigation requirements, such interference could affect the many important productions and activities that rely on such high-quality wireless audio products, including for example, news coverage, larges houses of worship, sporting events, TV and music productions. We discussed the parameters of Shure's interference study of the impact that unlicensed device operations in the TV bands will have on wireless microphones and the conclusions drawn from that data. To that end, we performed an audio demonstration that illustrated the harmful interference that unlicensed devices cause to wireless microphones. Shure's analysis demonstrates that the introduction of unlicensed devices in the TV bands, as currently proposed, will likely cause harmful interference to wireless microphones

Shure has studied several possible solutions that could, if developed and properly implemented, provide meaningful interference protection to wireless microphones in the event that the Commission determines in this proceeding that unlicensed devices should be allowed to operate in vacant TV channels. In light of the varied uses of wireless microphones in the United States, Shure discussed several approaches that could provide adequate protection to wireless microphones, including (1) a system that would identify TV channels in use by wireless microphones, and (2) a designation of some number of UHF and VHF channels where unlicensed devices will not operate.

Attached is the presentation provided to Commission staff.

If you have any questions regarding this meeting, please do not hesitate to contact the undersigned.

Very truly yours,

Catherine Wang

Catherine Wang

cc (by email): Ed Thomas
Alan Scrime
Karen Rackley
Hugh Van Tuyl

Ex Parte Presentation: Mitigating Interference from Unlicensed Devices in the TV Broadcast Bands Re: FCC NPRM ET Docket No. 04-186

SHURE INCORPORATED

August 4th, 2004

SHURE © Copyright 2004 Shure, Inc

Today's Presenters

Ahren Hartman

- Principal Engineer, Advanced Development

Edgar Reihl

- Principal Engineer, Advanced Development

Sandy Schroeder

- Director, Corporate Market Development

Jeff Krull

- Vice President, Engineering

© Copyright 2004 Shure, Inc

This is a test…this is only a test.

SHURE® © Copyright 2004 Shure, Inc

Agenda

- Brief Introduction
- Purpose of Discussion
- Wireless Microphone Characteristics
- Interference Study Results
- Interference Mitigation Approaches
- Conclusions and Questions

SHURE © Copyright 2004 Shure, Inc

Purpose of Discussion

Why are we here?

- FCC NPRM ET Docket #04-186 would allow unlicensed devices to operate in "unused" TV channels. However, this spectrum is currently being used by wireless microphones.
- Shure is concerned that without a workable interference mitigation plan, these devices will cause major problems for wireless microphone users.
- Shure seeks the Commission's help in developing a set of rules and standards that will allow new unlicensed devices to share the TV spectrum without interfering with wireless microphones and wireless audio systems.

© Copyright 2004 Shure, Inc

Wireless Microphone Characteristics

What are wireless microphones, and how are they used?

- Wireless microphones are part of a larger category of wireless audio products that also includes In Ear Monitors, wireless intercoms, and wireless cueing (IFB) systems.
- Wireless microphones are essential to today's dynamic Radio and TV programming.
- Large productions like the Super Bowl, or a major political convention, require as many as 200 wireless audio channels to operate simultaneously.
- Because of their low power and mobility, wireless microphones require a known, stable spectrum environment to operate well.
- Professional sound users expect the highest sound quality from their wireless microphones.
- Users typically expect wireless microphones to last 7-10 years.

© Copyright 2004 Shure, Inc

Wireless Microphone User Model

Wireless Microphone User Model

	User Description		Venue	Wireless Frequencies
LARGE	**MOBILE** = Large numbers of wireless used for a period of time (hours – days) at a temporary location	**MOBILE**	**Sports** Production **Film** Production **Political** Conventions **Shareholder** Meetings **Entertainment** Tours **Music** Festivals	**30 – 100 Frequencies** (10-30 mW, typ.)
LARGE	**LARGE FIXED** = Large numbers of wireless repeatedly used a permanent location	**LARGE FIXED**	**TV and Radio** Broadcasting **Houses of Worship** (Large) **Theme / Amusements** Parks **Hotels** (Large) **Government** Offices	**20 – 50 Frequencies** (10-30 mW, typ.)
SMALL	**FIXED** = Fewer numbers of wireless repeatedly used at a permanent location	**FIXED**	**Schools / Universities** **Houses of Worship** **Music** Clubs **Individuals** **Corporate** Offices **Hotels** (Small)	**1 – 10 Frequencies** (10-50 mW, typ.)

Typical Number of Wireless Used at an **LARGE FIXED** Venue (Large House of Worship):

- ❑ **20** Wireless Microphones
- ❑ **15** Wireless Personal Monitors
- ❑ **10** Wireless Intercoms

⇨ **45** Frequencies Required

SHURE © Copyright 2004 Shure, Inc

Will Unlicensed Devices Interfere?

The NPRM suggested that interference to wireless microphones would not be a problem due to:

- Relatively high power output of up to 250 mW (UHF) and 50 mW (VHF)
- Relatively short working range (300 feet)
- Operation of FM "Capture Effect"

What are the problems with these assumptions?

- Almost all wireless microphones operate with <50 mW ERP due to battery life expectations and antenna efficiency. Lower power also promotes better spectrum efficiency.
- Obstructions and reflections can weaken wireless microphone signals even at short distances, such that the Desired-to-Undesired (D/U) signal ratio drops below minimum requirements for interference-free operation.
- The FM "Capture Effect" is far from complete.

© Copyright 2004 Shure, Inc

Interference Study - Overview

To determine the "real world" impact of unlicensed devices, Shure conducted an extensive interference study:

- Surveyed 57 UHF wireless microphone models from 12 manufacturers to compile output power statistics
- Recorded wireless microphone signal propagation inside a large arena at distances up to 300 feet at both VHF and UHF (over 2000 data points recorded).
- Obtained an Experimental Part 5 License from the FCC and conducted live on-air interference tests, using a band limited 802.11g test signal.
- Translated an 802.11g wireless LAN system into the UHF band and recorded conducted interference to a wireless microphone voice signal at various Desired/Undesired ratios.
- Tested both hand held and body pack transmitters.
- Recorded signal strength and audio quality.
- Performed mathematical analysis demonstrating interference from unlicensed devices to wireless microphones in "real world" applications.

© Copyright 2004 Shure, Inc

Interference Study – Wireless Microphone Power

Surveyed UHF wireless microphone transmitters to compile output power statistics

- 12 Manufacturers, 57 Models = > 95% of models on market

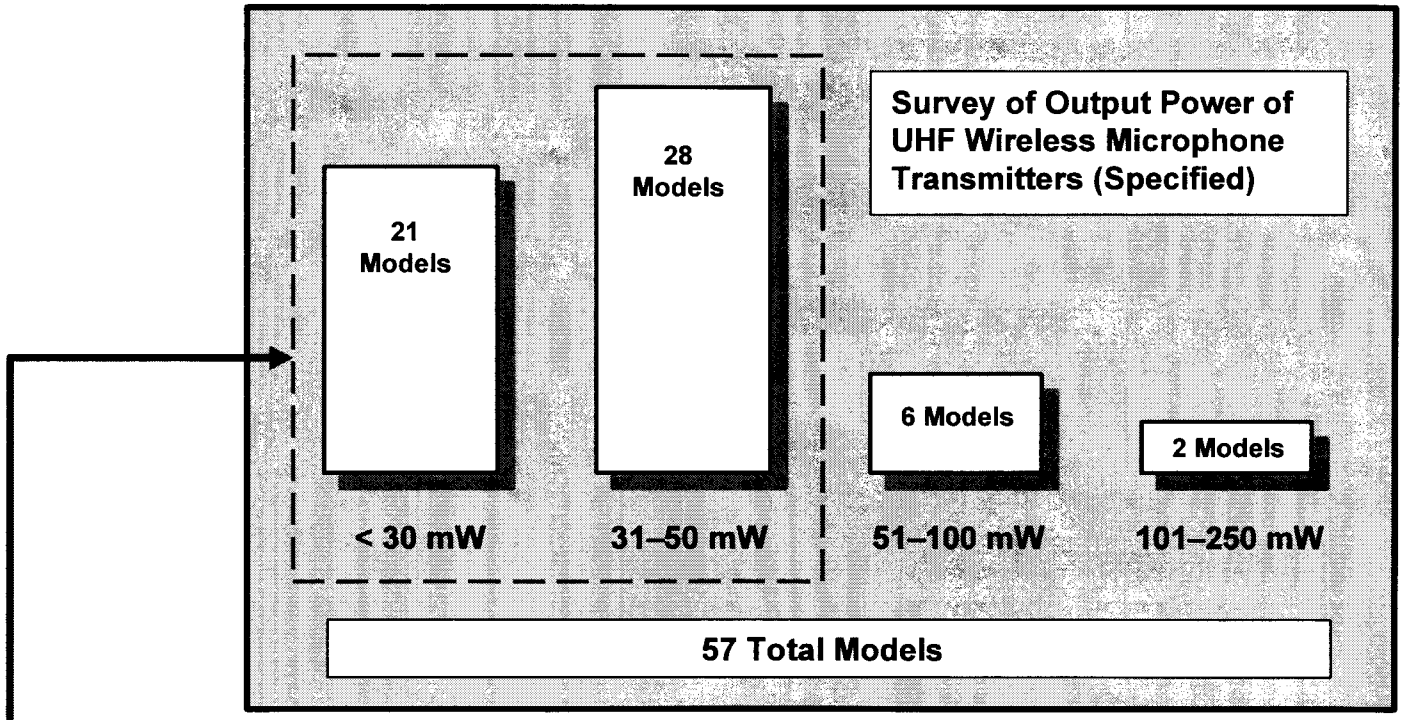

85% of Wireless Microphone Models Surveyed Operate with Less Than 50 mW of Output Power

© Copyright 2004 Shure, Inc

Interference Study – Propagation Measurements

Recorded wireless microphone transmitter signals inside an arena at distances of 1 to 300 feet from the receiver

- UHF, 10mW
- Indoor measurement

Handheld and Bodypack Wireless Microphone Transmitter Power Levels

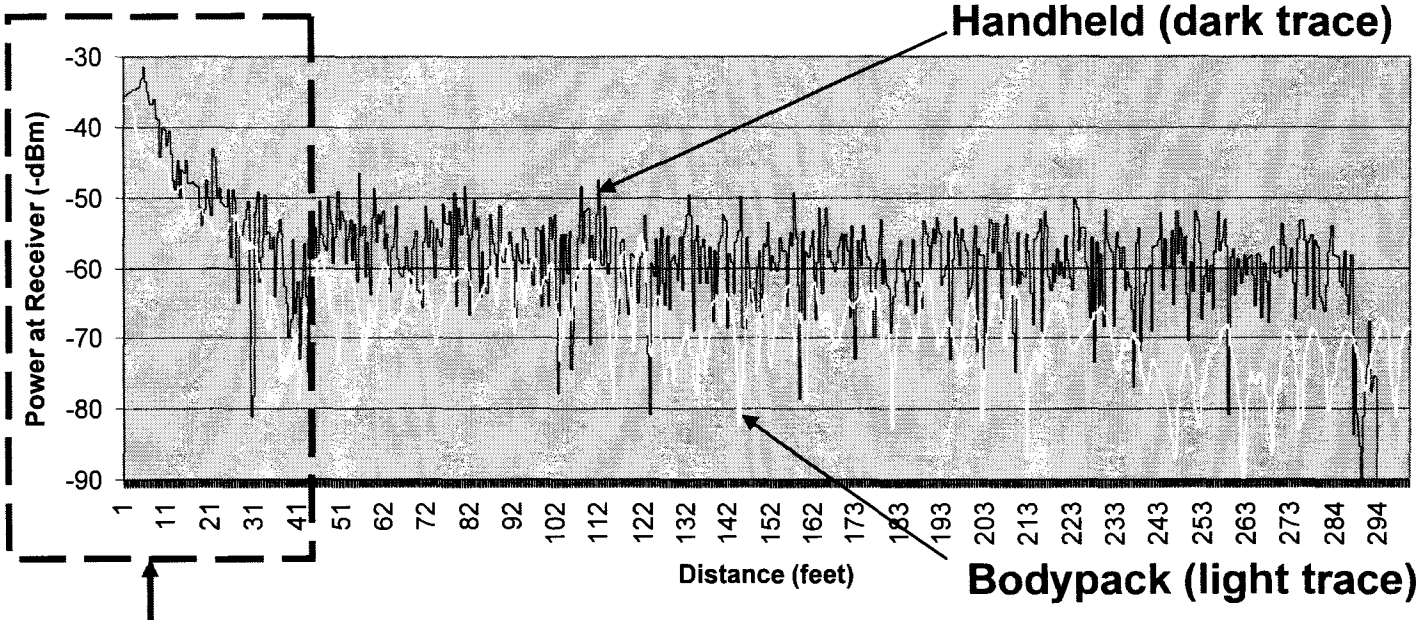

Signal levels vary more than 50dB over a 40 foot distance due to multi-path and body absorption

SHURE® © Copyright 2004 Shure, Inc

Interference Study – Radiated Testing Configuration

An 802.11g wireless LAN is translated to UHF and radiated at +20 dBm (NPRM level).*

Interference to the wireless microphone is measured and recorded during normal use.

Wireless Microphone Signal

Interference (802.11g) Signal

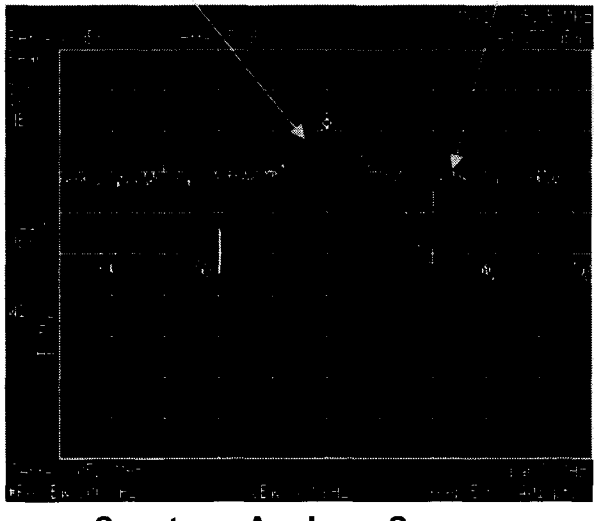

Spectrum Analyzer Screen Capture

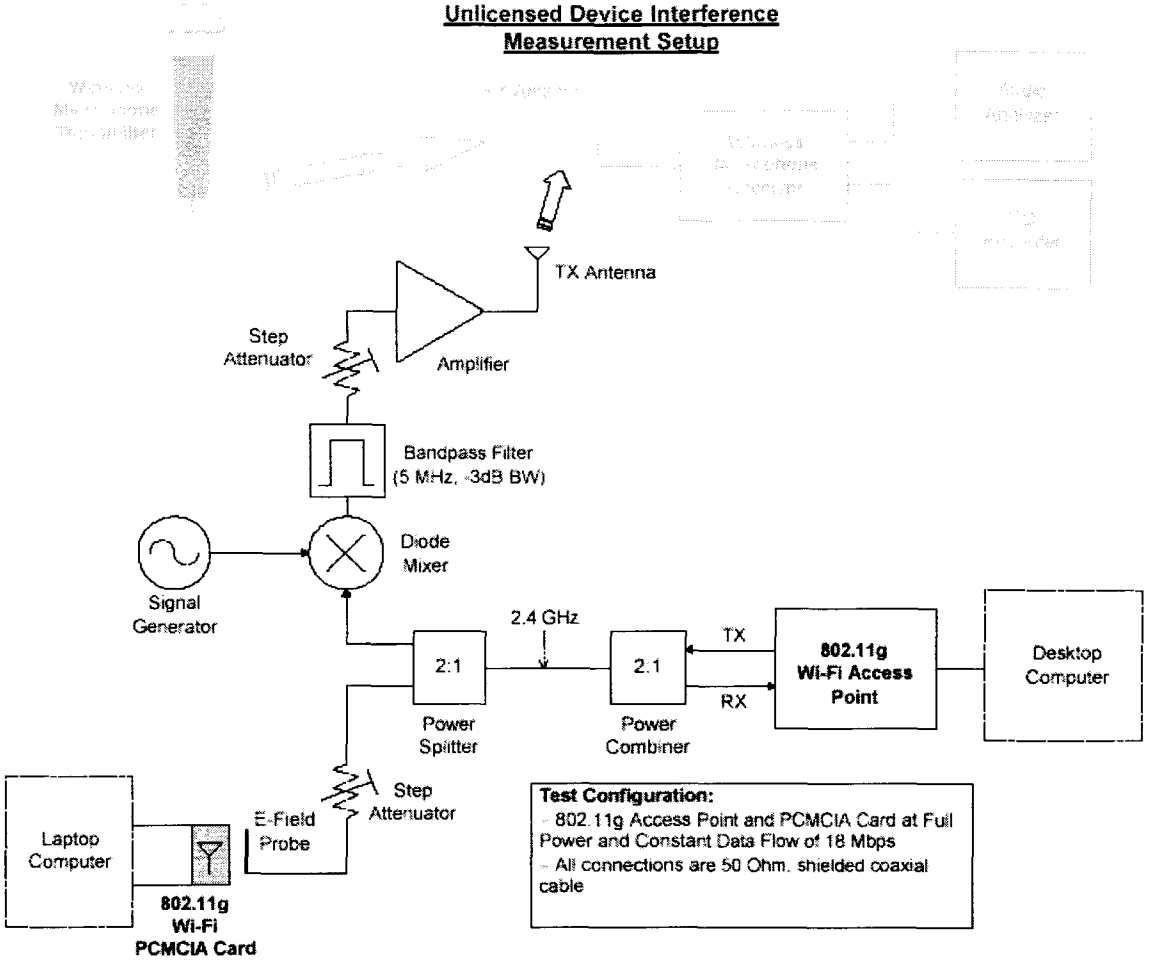

****A 47 CFR, Part 5--Experimental Radio Service License was granted to Shure in July 2004 to enable this testing.***

SHURE © Copyright 2004 Shure, Inc

Interference Study – Radiated Test Results

Wireless Microphone Interference Tests

- Test location at Shure Incorporated office - Niles, Illinois
- Test conducted by walking wireless microphone transmitter (30mW) away from the receiver at a constant rate up to approx. 150 feet separation

NOTE: These videos contain sound; adjust the computer's volume for proper audio level.

Test #1: Baseline – No Interference

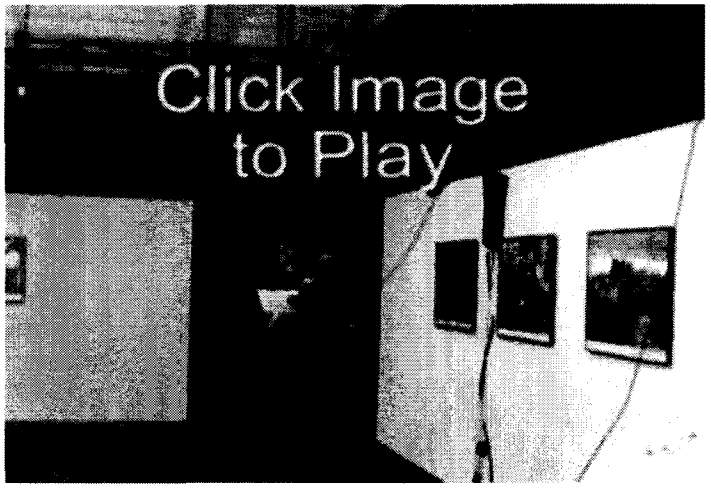

Walk-around Setup

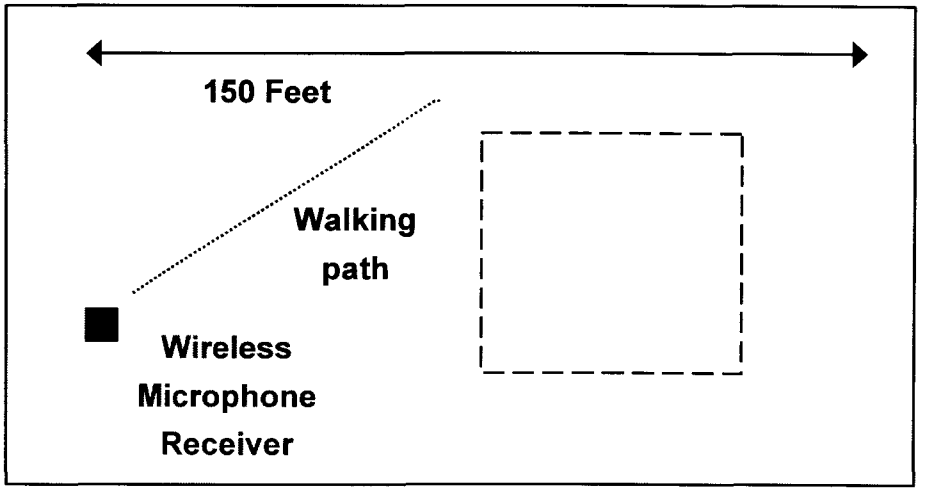

Shure Office Layout – 6th Floor

SHURE © Copyright 2004 Shure, Inc

Interference Study – Radiated Test Results

Wireless Microphone Interference Tests

- Test location at Shure Incorporated office - Niles, Illinois
- Test conducted by walking wireless microphone transmitter (30mW) away from the receiver at a constant rate up to approx. 150 feet separation

Test #2: Baseline: -54 dBm Interference to Wireless Microphone Receiver

Radiated Interference Level = -54 dBm avg. power at microphone receiver

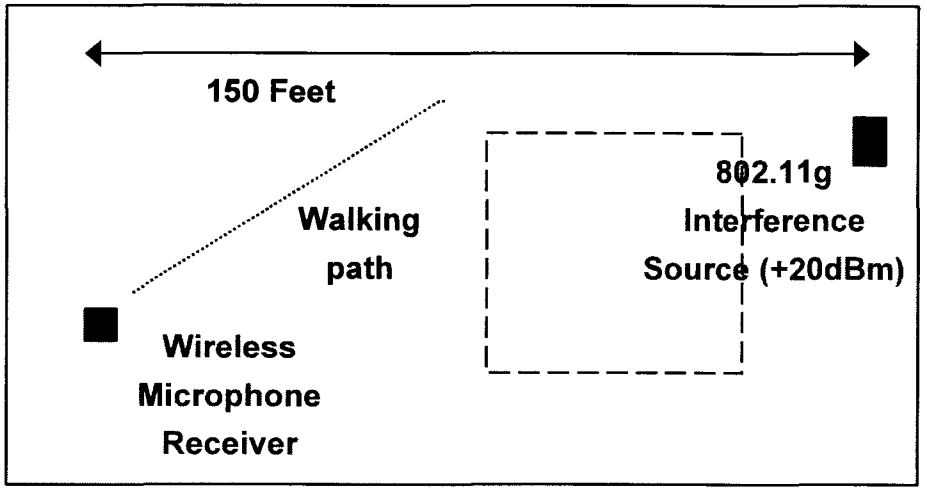

Shure Office Layout – 6th Floor

© Copyright 2004 Shure, Inc

Interference Study – Radiated Test Results

Wireless Microphone Interference Tests

- Test location at Shure Incorporated office - Niles, Illinois
- Test conducted by walking wireless microphone transmitter (30mW) away from the receiver at a constant rate up to approx. 70 feet separation

Test #3: Baseline: -40 dBm Interference to Wireless Microphone Receiver

Radiated Interference Level = -40 dBm avg. power at microphone receiver

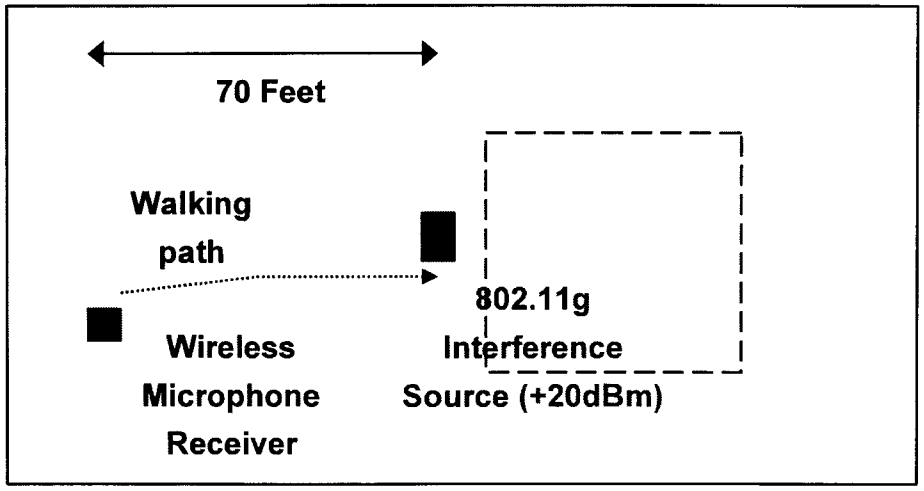

Shure Office Layout – 6th Floor

SHURE © Copyright 2004 Shure, Inc

Interference Study - Conclusions

CONCLUSION: ***Wireless Microphones will not overcome co-channel interference by means of "brute force" alone, due to the fact that unlicensed device placement and operation will be relatively uncontrolled.***

Given this fact, how could we avoid interference problems?

- Exempt some TV channels in each market from unlicensed device operation – only to be used for wireless microphones.
- Utilize a frequency management scheme to prevent unlicensed devices from using the same TV channels as wireless microphones.
- Lower the maximum allowed transmitter power of the unlicensed devices.

In order to be effective, any approach that is selected must be codified into the FCC Rules.

© Copyright 2004 Shure, Inc

Interference Mitigation Approaches

What are some possible ways to prevent unlicensed devices from interfering with wireless microphones?

1. Use a database with a control signal transmitted by a TV, radio station or other unlicensed device
2. Use "Listen Before Talk" (Dynamic Frequency Selection)
3. Exempt TV channels for wireless microphone operation in each market.
4. Use a stand-alone "Beacon" system to identify TV channels in use by wireless microphones
5. Use wireless LAN devices to identify TV channels in use by wireless microphones
6. Reduce the power level of unlicensed devices

	Wireless Users	
	Small	Large
Database / Control Signal		✓
Listen Before Talk		
Exempt TV Channels	✓	✓
Stand-alone Beacon		✓
LAN ID		✓
Reduce Unlicensed Device Power	✓	✓

✓ = Preferred solution

SHURE © Copyright 2004 Shure, Inc

Interference Mitigation Approaches

1. Database/Control Signal approach issues

- The database would have to be updated continuously (not daily or weekly).
- Wireless microphone users would need a convenient way to input their data.
- The control signal would have to be able to regulate unlicensed device operation within a small zone, such as a building or a few city blocks.

2. "Listen Before Talk" approach issues

- Wireless microphone users are mobile, and transmissions are not scheduled.
- Unlicensed devices would have to be able to detect comparatively weak wireless microphone signals (especially for Category 2 devices).
- Hidden node problems are likely.

SHURE © Copyright 2004 Shure, Inc

Interference Mitigation Approaches

3. Exempt TV Channels

- Exempt TV channel data could be sent via the control signal along with occupied TV channel data.
- Exempt channels could be changed when necessary due to TV channel changes.
- Both VHF and UHF exempt channels are needed, because wireless microphone systems are supplied in separate VHF and UHF models.
- Based on our analysis, 2 exempt VHF high band TV channels and 6 exempt UHF band TV channels per market are needed.
- The exempt UHF TV channels should be within channel Channels 21-51, and should preferably be non-contiguous (where possible) to maximize the number of wireless microphone channels that can be operated in each TV channel.
- Although exempt TV channels would address the needs of many wireless users, there would not be enough spectrum for large events, which require 200 or more wireless audio channels.

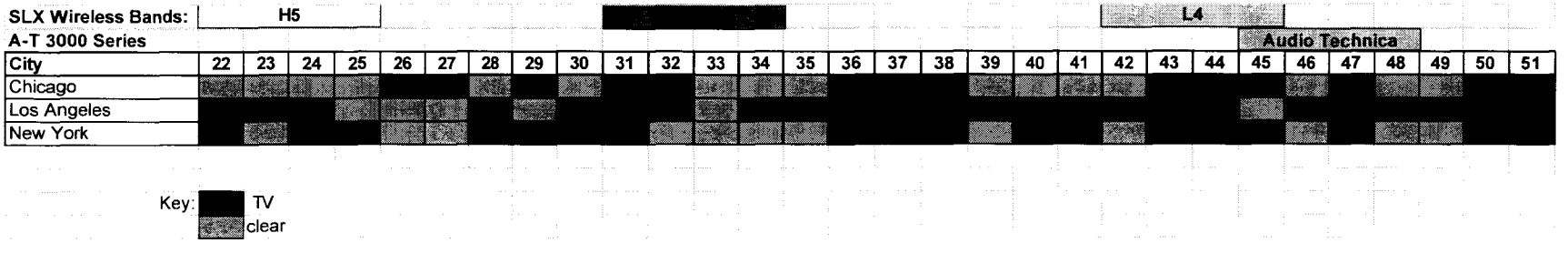

© Copyright 2004 Shure, Inc

Interference Mitigation Approaches

4. A Beacon System is another interference prevention technique that could provide efficient local spectrum management:

- A local beacon transmitter operating in an unoccupied TV channel could broadcast information to unlicensed devices operating nearby.
- The unlicensed devices would need to scan for the beacon, and avoid operating on TV channels marked as being in use by wireless microphones.
- This is essentially a variation on the Control Signal approach suggested in the NPRM that works specifically at the local level. This results in much more efficient use of spectrum.

© Copyright 2004 Shure, Inc

Interference Mitigation Approaches

A Beacon System concept diagram:

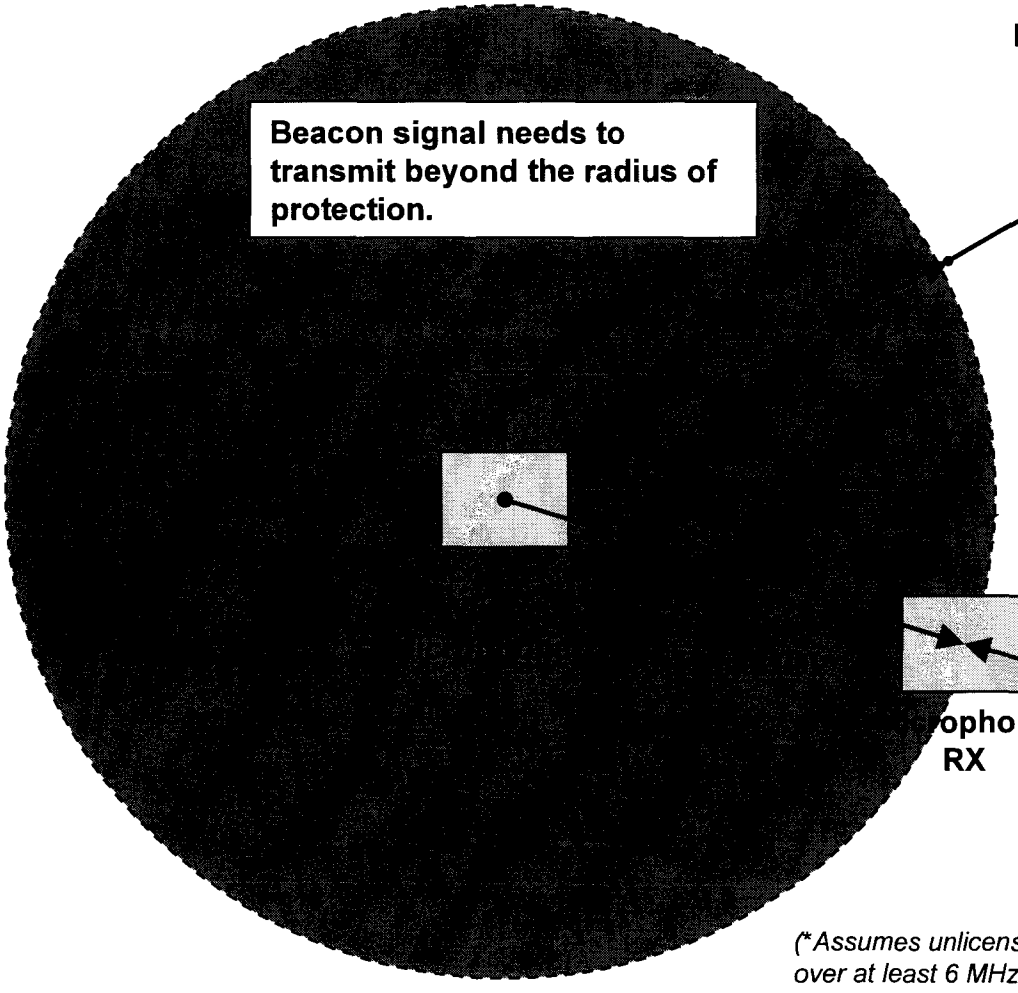

Beacon signal needs to transmit beyond the radius of protection.

Theoretical propagation model

Beacon Distance = R + B (feet)

Microphone Power (D) = +10 dBm

U.D. Power (U) = +26 dBm

D/U = (10-26)+12 (spreading factor over 6MHz*) = -4 dB when R=B

D/U > +20 dB for no interference to microphone

R+B = **15 times R** for D/U > +20 dB

(Example: R=50 feet, B=750 feet)

ophone RX

Interference Signal (U)

Unlicensed Device TX

*(*Assumes unlicensed device spreads power over at least 6 MHz channel)*

SHURE © Copyright 2004 Shure, Inc

Interference Mitigation Approaches

A Beacon System concept diagram (cont'd):

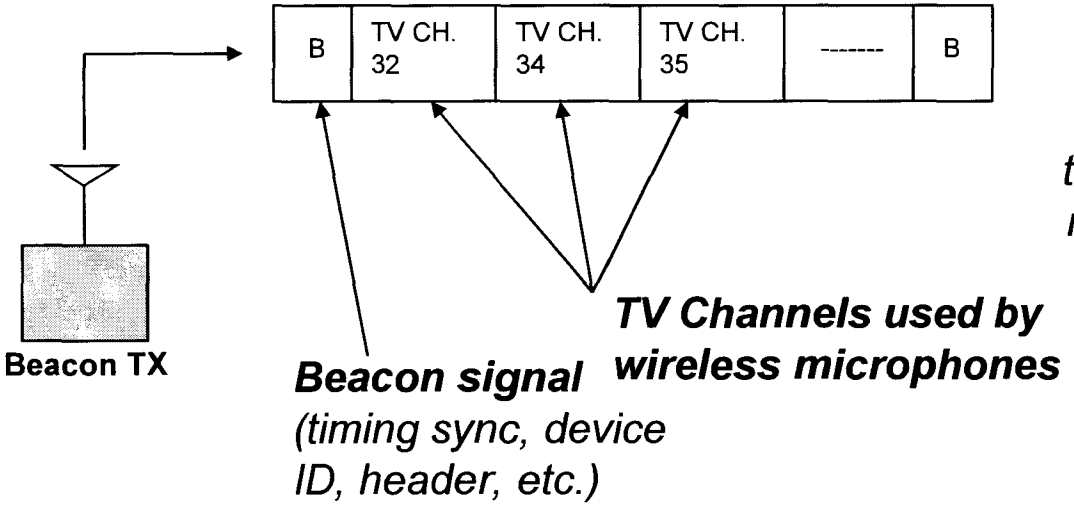

Example Beacon signal payload

(FSK-encoded data, transmits continuously while microphones are operating)

Question: Where does the Unlicensed Device look for the Beacon Frequency?

© Copyright 2004 Shure, Inc

Interference Mitigation Approaches

5. **The Wireless LAN ID solution relies on a combination of hardware and software:**
   - Large wireless audio users would purchase a standard UHF band Wi-Fi LAN card (Category 1 device) and install it in a PC or in a wireless audio transmitter or receiver designed to accept it.
   - A software program would allow the LAN device to communicate with other locally-present Category 1 or Category 2 unlicensed devices to tell them what TV channels to avoid.
   - Local Category 1 and 2 unlicensed devices would need to detect the presence of the wireless audio system's Wi-Fi card and capture the occupied channel data from it.
   - The Wireless LAN ID solution is efficient since it only requires protection in the small area of the wireless microphone system.

A Wireless LAN ID system has additional possibilities:

- A DTV receiver could be fitted with a Wi-Fi card to report to nearby unlicensed devices what channel it was tuned to and when it was being interfered with.
- This would allow automatic resolution of interference problems by "closing the loop" between the victim receiver and the unlicensed transmitter.

© Copyright 2004 Shure, Inc

Interference Mitigation Approaches

A Wireless LAN ID System concept diagram:

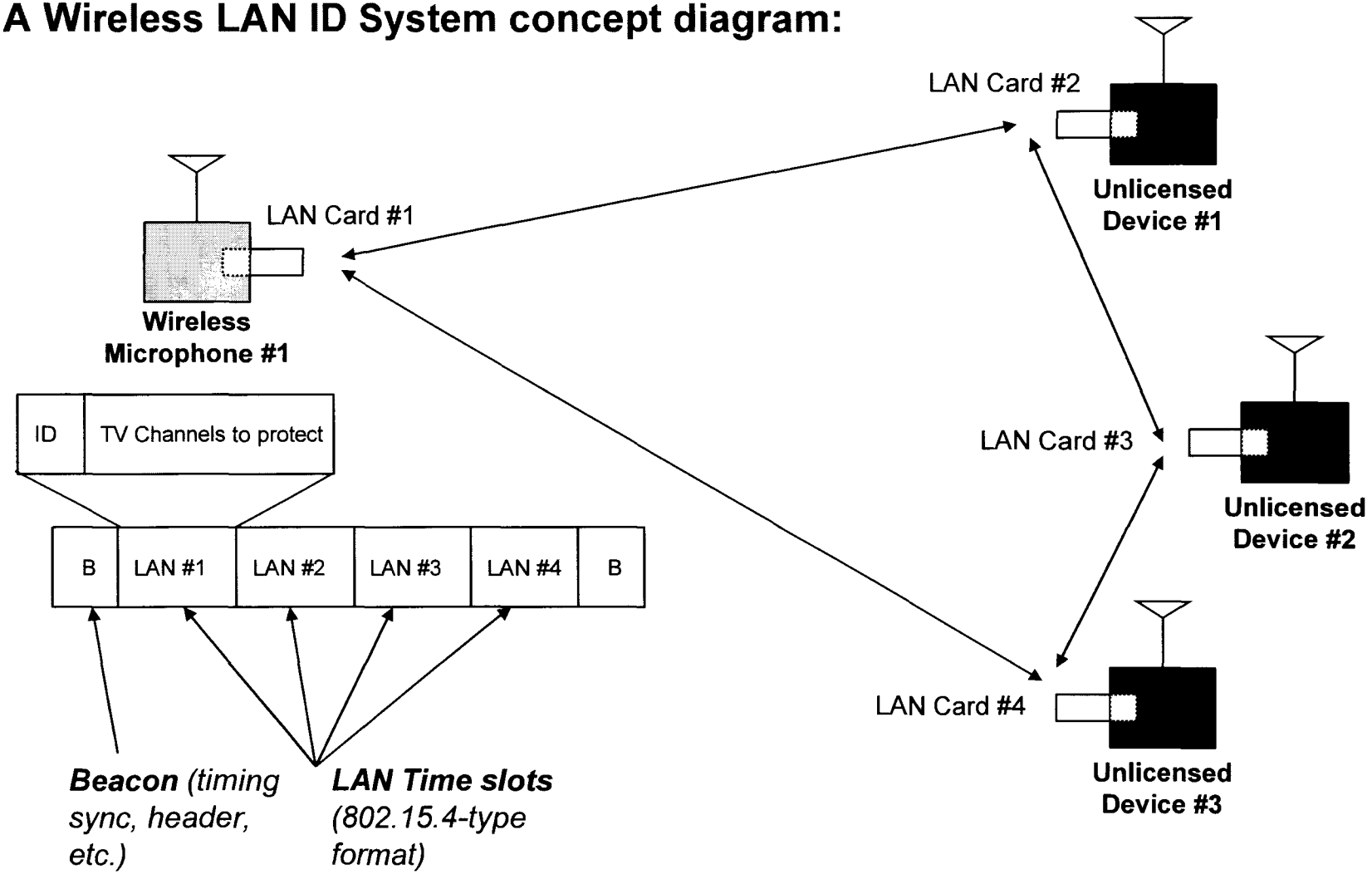

SHURE © Copyright 2004 Shure, Inc

Interference Mitigation Approaches

6. A simple approach would be to limit the output power of unlicensed devices to a lower level:

- The use of 100 mW (or more) power by unlicensed devices on TV channels used by wireless microphones would significantly degrade microphone audio performance and service area.
- Reducing the power level to 10 mW (or less) would be one way to reduce the interference potential and help wireless microphones and unlicensed devices coexist.
- This would also help address concerns about interference to DTV receivers and Cable Set Top Boxes.

© Copyright 2004 Shure, Inc

Shure Recommendations

In order to address the needs of both small and large wireless system users, Shure recommends a two-tiered frequency management solution:

- Exempt some TV channels in each market from unlicensed device operation – only to be used for wireless microphones. This would address the needs of most smaller fixed and some mobile wireless microphone users.
- Use a wireless LAN identification solution (wireless LAN ID), or a standalone beacon that would be monitored by unlicensed devices. This would address the needs of large fixed/mobile wireless microphone users, such as the Super Bowl, the Olympics, or political conventions.

© Copyright 2004 Shure, Inc

Conclusions and Questions

What are the potential benefits of the two-tiered approach?

- It will address the needs of small and large wireless microphone system users.
- Wireless microphones can continue enabling dynamic broadcast Radio and TV programming without interference.
- The FCC succeeds in establishing new unlicensed spectrum in TV bands.
- Complaints from existing licensed wireless users about unlicensed devices are avoided.
- Unnecessary threats to a successful DTV rollout are minimized.

© Copyright 2004 Shure, Inc

Conclusions and Questions

- Shure supports the Commission's efforts to establish new unlicensed spectrum, as long as incumbent licensed broadcast TV and wireless audio users are protected from harmful interference.
- Shure seeks the Commission's help in formulating rules and standards that would enable this to happen.
- **In order to be effective, any approach that is selected must be codified into the FCC Rules.**

© Copyright 2004 Shure, Inc