Richard R. Cameron
Direct Dial: (202) 637-2225
richard.cameron@lw.com

555 Eleventh Street, N.W., Suite 1000
Washington, D.C. 20004-1304
Tel: (202) 637-2200 Fax: (202) 637-2201
www.lw.com

LATHAM & WATKINS LLP

FIRM / AFFILIATE OFFICES
Boston, Brussels, Chicago, Frankfurt, Hamburg, Hong Kong, London, Los Angeles, Milan, Moscow, New Jersey, New York, Northern Virginia, Orange County, Paris, San Diego, San Francisco, Silicon Valley, Singapore, Tokyo, Washington, D.C.

August 20, 2004

Marlene H. Dortch, Secretary
Federal Communications Commission
445 Twelfth Street, S.W.
Washington, D.C. 20554

Re: Notice of *Ex Parte* Communication, *Developing a Unified Intercarrier Compensation Regime*, CC Docket No. 01-92

Dear Ms. Dortch:

In accordance with Section 1.1206 of the Commission's rules, 47 C.F.R. § 1.1206, the Intercarrier Compensation Forum ("ICF") submits this letter to report that, on August 20, 2004, Gary M. Epstein and Richard R. Cameron of Latham & Watkins, counsel for the ICF, together with the following representatives of ICF member companies:

AT&T – Robert Quinn, Joel Lubin
MCI, Inc. – Alan Buzzacott
SBC Communications Inc. – David Hostetter
Sprint Corporation – Jeff Lindsey

met with Commissioner Michael J. Copps and his Legal Advisor, Jessica Rosenworcel.

At the meeting, we discussed the ICF's year-long effort to develop a comprehensive consensus proposal for reform of intercarrier compensation and universal service. The ICF's Plan will advance consumer interests, facilitate efficient competition, promote the deployment of new technologies and enhance universal service.

The ICF presented an overview of its Plan using the material attached to this letter. More specifically, the material consists of:

1. A Cover Letter from ICF member companies expressing support for the Plan and urging the Commission to adopt the Plan as a whole to be implemented by July 1, 2005;
2. An Executive Summary of the ICF Plan;
3. A PowerPoint presentation setting forth the details of the Plan;
4. Diagrams illustrating typical interconnection arrangements in today's environment, showing that the present system is "broken" and harms consumers and the economy;

5. Diagrams illustrating interconnection arrangements under the ICF Plan;
6. A one-page summary of the key events in the ICF Plan; and
7. A shorter summary PowerPoint presentation providing an overview of the Plan.

The ICF indicated in the meeting that it would shortly file a substantial narrative containing the detailed ICF Plan.

If you have any questions concerning these meetings or this *ex parte* notice, please do not hesitate to contact us.

Very truly yours,

Gary M. Epstein
Richard R. Cameron
Counsel for The Intercarrier Compensation Forum

cc: Commissioner Michael J. Copps
Jessica Rosenworcel

Regulatory Reform Proposal of the

Intercarrier Compensation Forum

August 13, 2004

In the Matter of Developing a Unified Intercarrier Compensation Regime, CC Docket No. 01-92, Notice of Proposed Rule Making, 16 FCC Rcd 9610 (2001)

Gary M. Epstein
Direct Tel: (202) 637-2249
E-mail: gary.epstein@lw.com

Richard R. Cameron
Direct Tel: (202) 637-2225
E-mail: richard.cameron@lw.com

LATHAM&WATKINS
555 11th Street, NW
Suite 1000
Washington, DC 20004
Tel: (202) 637-2200

Intercarrier Compensation Forum
Regulatory Reform Proposal
August 13, 2004

Table of Contents

ICF Member Company Cover Letter…….Tab 1

Executive Summary……Tab 2

Plan Slide Presentation……Tab 3

Existing Network Interconnection Diagrams……..Tab 4

Network Interconnection Under the ICF Plan…….Tab 5

Michael K. Powell, Chairman
Kathleen Q. Abernathy, Commissioner
Michael J. Copps, Commissioner
Kevin J. Martin, Commissioner
Jonathan S. Adelstein, Commissioner
Federal Communications Commission
445 12th Street SW
Washington, DC 20554

Dear Chairman Powell and Commissioners Abernathy, Copps, Martin and Adelstein:

Each undersigned company is a member of the Intercarrier Compensation Forum ("ICF") and agrees with and fully supports the ICF's Intercarrier Compensation and Universal Service Reform Plan. We strongly urge the FCC to adopt the Plan as proposed so that it can be implemented by July 1, 2005.

Very truly yours,

AT&T Corp.
Name: James W. Cicconi
Title: General Counsel and
Executive Vice President
Law & Government Affairs

General Communication, Inc.
Name: Dana L. Tindall
Title: Sr. Vice President, Legal & Regulatory Affairs

Iowa Telecom
Name: D. M. Anderson
Title: Vice President- External Affairs

Level 3 Communications, LLC
Name: Thomas C. Stortz
Title: Executive Vice President and Chief Legal Officer

MCI, Inc.
Name: Anastasia D. Kelly
Title: Executive Vice President
General Counsel

SBC Communications Inc.
Name: James D. Ellis
Title: Senior Executive VP & General Counsel

Sprint Corporation
Name: Thomas A. Gerke
Title: Executive Vice President –
General Counsel and External Affairs

Valor Telecommunications
Name: William M. Ojile, Jr.
Title: Sr. Vice President, Chief Legal Officer
& Secretary

Global Crossing North America Inc.
Name: Paul Kouroupas
Title: Vice President, Regulatory Affairs

Intercarrier Compensation Forum

Executive Summary of
Intercarrier Compensation and Universal Service Reform Plan
August 13, 2004

This document summarizes a comprehensive plan for intercarrier compensation and universal service reform developed by the Intercarrier Compensation Forum ("ICF"). The ICF members are united in their belief that the current myriad of disparate intercarrier compensation regimes is not sustainable in its present form and cannot be fixed. It harms consumers and creates artificial regulatory advantages for certain carriers and technologies at the expense of others. In doing so, it creates opportunities for regulatory arbitrage that threaten universal service in addition to the fundamental integrity and reliability of the nation's telecommunications carriers and networks.

The ICF's Plan represents a consensus proposal for reforming intercarrier compensation and universal service issues in a manner that will facilitate efficient competition, promote the deployment of new technologies, preserve and enhance universal service, and advance consumer interests.

I. Background on the Intercarrier Compensation Forum Plan

The ICF is a diverse group of telecommunications industry participants representing incumbent local exchange carriers, competitive local exchange carriers, interexchange carriers, next-generation network providers, rural telephone companies, and wireless service providers. Its current membership consists of: AT&T Corporation, General Communication, Inc., Global Crossing North America Inc., Iowa Telecom, Level 3 Communications, LLC, MCI, Inc., SBC Telecommunications Inc., Sprint Corporation, and Valor Telecommunications, Inc.

Members of the ICF have worked diligently for over one year to craft a balanced, detailed, operational Plan to reform today's broken network interconnection, intercarrier compensation, and universal service regulations. At least 25 companies have participated at various times as members of the ICF, and their contributions continue to shape the Plan. In addition, the ICF has received and incorporated input from numerous rural carrier trade associations. As a result, the ICF Plan is the only one existing today that embodies a consensus solution based on input from a broad range of normally divergent interests, and it is the only one to address a full range of network interconnection, intercarrier compensation, and universal service in a comprehensive manner.

II. Today's Rules Are Broken Beyond Repair and Must Be Replaced

Today's myriad network interconnection and intercarrier compensation schemes no longer reflect the world in which we live. Technological advances have given residential and business consumers telecommunications options that did not previously exist, including alternatives from local telecommunications providers, wireless services, and packet technology. Regulators have developed today's diverse assortment of intercarrier compensation regimes in a piecemeal fashion as these technologies evolved, causing carriers artificially to distinguish calls

– and the payments for these calls – based purely on such factors as the end points of the communication (*e.g.*, local or long-distance, interstate or intrastate), the carriers involved (*e.g.*, ILEC, CLEC, CMRS, or IXC), and the technologies involved (*e.g.*, wireline circuit-switched voice, wireless, ISP-bound, or packet-switched services).

These disparities harm consumers. The current regime forces carriers to make arbitrary distinctions between "local" and "long-distance" services, limiting local calling scope and making it more difficult for consumers to receive the service bundles they want. Jurisdictional disparities in intercarrier compensation often make it more expensive to call across the state than across the country or around the world. Rural and low-income consumers suffer even greater harm. High access charges limit long distance choice for rural consumers, reduce incentives for rural carriers to market DSL services, and inflate toll rates. Some low-income consumers may lose service when they incur large toll bills they cannot afford to pay.

Today's outmoded rules also harm the economy. They create artificial regulatory advantages and disadvantages among carriers, leading to arbitrage, distorting consumer choices in the market and creating uneconomic substitution. In addition, compensation disputes divert resources that otherwise could be used to deliver newer, cheaper, and better services in the market. Uncertainty limits carrier ability to formulate business plans and impedes access to capital markets.

Finally, today's broken system threatens universal service. Because implicit support has not yet been fully removed from existing intercarrier compensation schemes, universal service remains vulnerable as competition increases. In addition, interstate telecommunications revenues, on which universal service contributions are based, are becoming more difficult to identify and are undoubtedly shrinking. As a result, some providers are able to avoid some or all of their contribution obligations, as consumers increasingly bypass interstate long distance offerings in favor of wireless services, bundled service, and information services.

III. The ICF Plan

The ICF has developed a single consensus Plan for reforming today's outmoded network interconnection, intercarrier compensation and universal service rules, in order to advance consumer interests, facilitate efficient competition, promote the deployment of new technologies, and preserve and enhance universal service. To accomplish these goals, the Plan begins to restructure rates on July 1, 2005 to bring immediate relief from today's broken system. Within three years, it unifies the disparate network interconnection and intercarrier compensation regimes governing interstate switched access, intrastate switched access, reciprocal compensation, compensation for ISP-bound traffic, inter- and intra-MTA CMRS traffic, paging traffic, and traffic with one end originating or terminating on IP networks. The Plan has three primary sections: (1) Network Interconnection; (2) Rate Restructuring; and (3) Universal Service.

A. Network Interconnection

Developing uniform network interconnection rules is an essential prerequisite for restructuring rates to unify intercarrier compensation. Thus, the ICF Plan establishes clear and explicit technical and financial rules to govern the efficient interconnection of diverse carrier

networks. These rules would take effect on July 1, 2007 and provide a framework for voluntary carrier negotiations and establish default responsibilities in the absence of any carrier agreement to the contrary. The ICF Plan classifies carrier networks into three categories – hierarchical, non-hierarchical, and rural – and specifies rules for interconnection with each. These rules are based on the concept of network "Edges," which are specified points at which these networks interconnect for the delivery of terminating traffic. Network Edges must be able to accept all types of public switched telephone network traffic, and are subject to numerical, functional, and locational requirements specified in the Plan.

The network interconnection rules in the ICF Plan are explicitly designed to protect universal service in rural America by establishing modified default rules to apply to networks operated by a Covered Rural Telephone Company ("CRTC"), as defined in the Plan. A CRTC is not required to deliver traffic to an interconnecting carrier at a point outside of the contiguous portion of its study area where the traffic originates, except to reach another CRTC within the same LATA. In addition, the Plan continues to provide a very important additional transport revenue stream for CRTCs.

B. Rate Restructuring

The Plan replaces revenue from today's intercarrier charges with a fundamentally new system comprised of end user charges, new federal universal service support, revenue from interconnection transport and transiting charges, revenue from a transitional uniform termination charge, and terminating transport revenues for CRTCs. Starting July 1, 2005, all intercarrier compensation transitions in four annual steps over three years to a uniform system with a single termination rate of $0.000175 per minute for all traffic. Beginning July 1, 2007, with no sunset, carriers also may receive intercarrier payments for tandem transiting services, interconnection transport, and, for CRTCs, terminating transport revenues at prescribed rates for inbound traffic. Commencing July 1, 2010, the $0.000175 per minute termination rate is reduced to zero in two equal annual steps.

Revenue eliminated from intercarrier compensation as a result of this transition is replaced by a combination of end user charges and new federal universal service support. For large carriers, the maximum monthly residential and single-line business subscriber line charge ("SLC") cap increases by $0.75 in each of the first two years of the Plan. In each of the next two years, it increases by $1.00, on July 1, 2007 and by $1.00 on July 1, 2008. The non-primary residential and multiline business SLC caps increase only to the extent that they otherwise would be below the residential cap. A carrier's average SLC also may rise no more than $0.75, $0.75, $1.00, and $1.00 at each of these steps, respectively, although individual SLCs that are significantly below the $6.50 cap before the start of the transition may increase by a slightly greater amount. As of July 1, 2008, all monthly SLC caps for non-CRTCs are unified, and the SLC cap is indexed for inflation starting on July 1, 2009.

The Plan protects rural America by creating a more measured transition for CRTC customers. A CRTC's maximum monthly residential and single line business SLC cap increase by $0.50 per year, from $6.50 today to $9.00 effective July 1, 2009. On July 1, 2008, a CRTC's multiline business SLC cap increases to $10.00. A CRTC has the <u>option</u> to increase the

residential monthly SLC cap by two additional $0.50 annual increments beginning July 1, 2010, but no CRTC SLCs are indexed for inflation.

The Plan also achieves greater regulatory parity among carrier types by creating specified pricing flexibility for price cap ILECs. Subject to consumer protection safeguards, the Plan provides increased price cap carrier pricing flexibility, effective July 1, 2005, and a further measure of pricing flexibility for these carriers, effective July 1, 2008.

C. Universal Service

The Plan creates two new universal service mechanisms to provide explicit support for intercarrier compensation amounts otherwise not recoverable under the Plan's rate restructuring rules, one applicable to areas served by BOCs and other non-CRTC ILECs and one applicable to areas served by CRTCs. The primary differences between the two are the extent of availability (during a transitional period) of this new support to competitive eligible telecommunications carriers (CETCs) and the disaggregation options available to recipients.

The first, the "Intercarrier Compensation Recovery Mechanism," or "ICRM," provides support to BOCs and non-CRTC ILECs. It is available, on a per-eligible-line basis, to all CETCs competing with these carriers. By default, ICRM is available as a uniform, per-line amount to all eligible lines (*i.e.*, no disaggregation). ILECs have two alternatives to this default. A recipient ILEC may establish a Zone Disaggregation Plan. In the alternative, an ILEC may establish a Residential Targeting Plan, under which all ICRM support is targeted to residential lines based on a showing that the total revenue opportunity for serving a residential line is less than that for serving a business line.

The second, the "Transitional Network Recovery Mechanism," or "TNRM," is available to CRTCs. Its availability to CETCs competing with these carriers is limited to those (including new entrants) that lose access revenues as a result of the plan. Because CMRS carriers do not receive switched access charges, this transitional restriction is intended to allow only wireline CETCs to receive support from the TNRM, on a per-eligible line basis. The Plan calls for the FCC to review whether additional CETCs should receive support from the TNRM at the conclusion of the initial term of the Plan, in 2013. TNRM may be disaggregated in accordance with the Commission's existing rules governing disaggregation of support for rural carriers.

In addition, the Plan also makes several improvements to existing support mechanisms, including the rural high cost loop support mechanism (removing the cap, unfreezing the national average unseparated cost per working loop, and eliminating the rule reducing support for carriers serving over 200,000 lines) and the safety valve support mechanism (providing augmented support in the partial year and first full year after an acquisition closes, and creating "Safety Valve II," to provide analogous support for switching and transport investment). In addition, the Plan provides an option for certain price cap CRTCs to elect to receive support under the non-rural, model-based high cost mechanism. Finally, the Plan provides that the existing per-line universal service support amount will remain portable to competitive eligible telecommunications carriers.

To fund all existing and new mechanisms, the Plan creates a new uniform universal service contribution methodology based on "units" applied to telephone numbers and high-capacity network connections. Under this methodology, each unique working telephone number is assessed one unit, and the Plan allows CMRS carriers, CRTCs, and CRTC competitors to phase this assessment in for additional numbers in a residential household account. Residential DSL, cable modem, and other high-speed, non-circuit-switched connections are also assessed one unit, harmonizing today's disparate treatment of DSL and cable modem services. For business connections, the Plan establishes a four-tiered system of assessments for non-switched, dedicated network connections ranging from one to 100 units depending on capacity.

IV. The Benefits of the ICF Plan

By creating uniform national default network interconnection, intercarrier compensation, and universal service rules, the ICF Plan will benefit both consumers and the U.S. economy. Consumers will have access to more services and greater competition once the "rules of the road" are rationalized. They will be more readily able to purchase innovative products and service they want, in affordable bundles. The Plan will better enable carriers to offer flat-rated, all-distance plans that CMRS customers have embraced, and will promote economically rational pricing and efficient competition, sending correct pricing signals to consumers.

Rural and low-income consumers in particular will benefit, as the Plan will promotes greater choice and less restrictive calling options, including expanded local calling scopes, and greater choice in broadband and long distance services. The Plan will further promote universal service by promoting comparability of urban and rural services and prices, replacing support that is implicit in intercarrier compensation today with explicit support provided by transparent, sustainable mechanisms. Moreover, the Plan protects low-income consumers by exempting Lifeline customers from SLC rate increases and universal service contribution pass-throughs.

The U.S. economy also will benefit from the ICF Plan. By increasing certainty in the telecommunications industry, the Plan will facilitate carrier business planning and access to capital markets. In addition, by reducing areas of dispute, the Plan will allow carriers to lower their costs and devote greater resources to developing and launching new and innovative products and services. The Plan will also minimize arbitrage opportunities and competitive distortions by eliminating artificial, uneconomic distinctions among functionally equivalent services.

Finally, implementation of the Plan will harmonize compensation for circuit-switched services with that applicable to wireless and VOIP services.

V. Conclusion

The ICF will shortly be filing a substantial narrative containing the detailed ICF Plan, which must take effect by July 1, 2005. The ICF urges the Commission expeditiously to seek comment on that Plan and to adopt rules implementing it in advance of that date.

| DC\697231.1||

Intercarrier Compensation Forum

Intercarrier Compensation and
Universal Service Reform Plan

August 13, 2004

The System is Broken

- Today's rules limit consumer choices and place rural and low-income consumers at risk.
- Today's rules encourage arbitrage and create inefficiency by applying radically different compensation schemes to largely the same functions and services, even when provided by the same carrier.
- Today's rules create uncertainty and instability that harms carrier efforts to make business plans and attract investment to maintain networks and develop new services.
- Today's rules fail to support universal service in a sustainable manner.

Intercarrier Compensation Rates

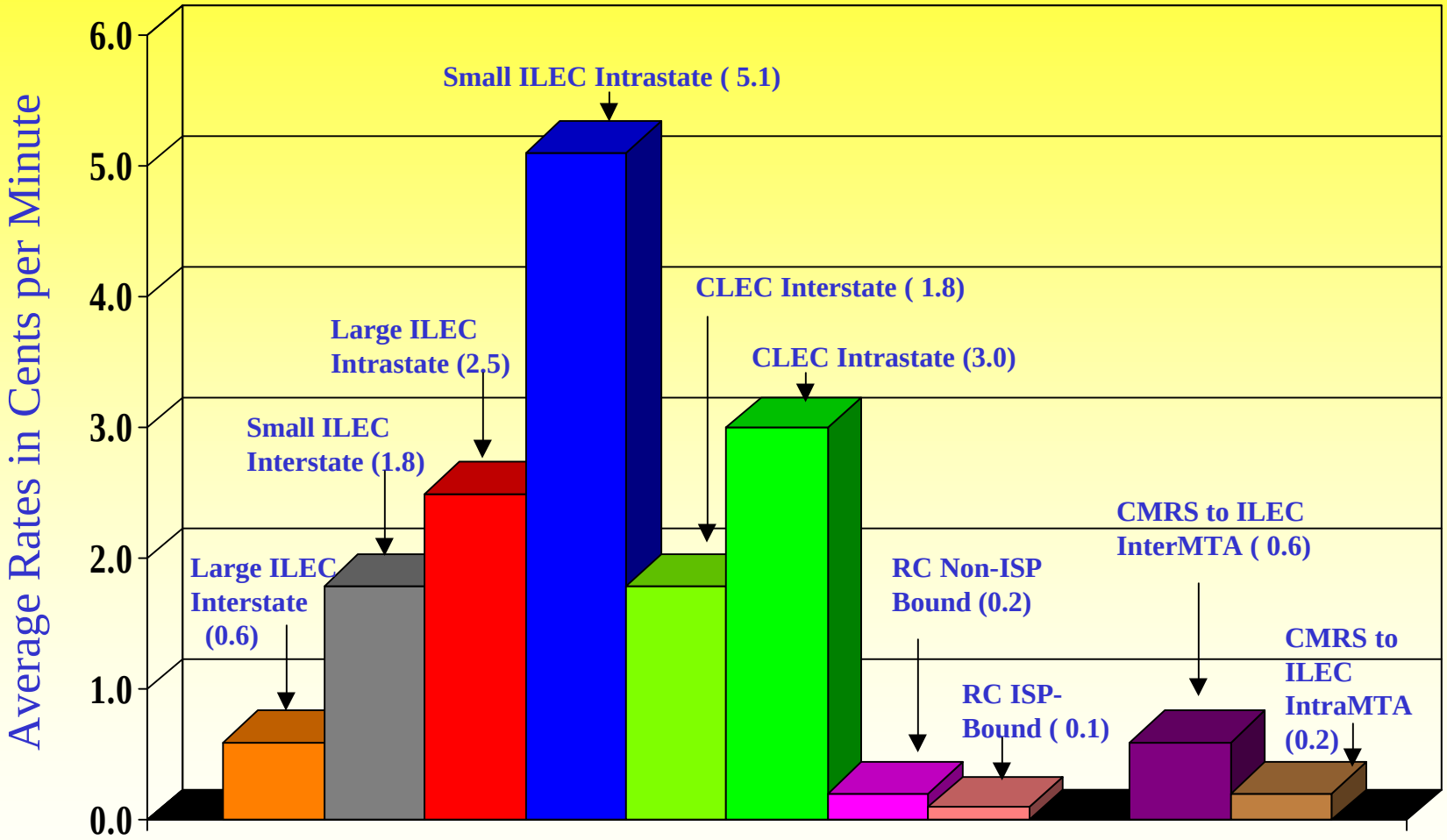

High (¢/min):	1.5	8.9	9.9	34.9	6.8	35.9	0.3	0.1	8.9	0.3
Low (¢/min):	0.5	0.3	0.4	0.7	0.2	0.4	0.0	0.0	0.2	0.0

Today's Rules Harm Consumers

- Consumers do not receive the service packages they want:
  - Legacy retail pricing plans and underlying intercarrier compensation regimes limit calling scope size.
  - Carriers must distinguish between "local" and "long-distance" services.
- Consumers pay inflated, averaged toll rates that include implicit universal service support.
- Low income consumers in particular are at risk of losing service if they cannot afford the resulting high toll bills.
- Rural consumers face high toll bills, small local calling areas, and limited long distance and broadband choices.

Today's Broken System Harms the Economy

- Disparities create artificial regulatory advantages and disadvantages among telecommunications carriers, leading to arbitrage and uneconomic substitution.
- Intercarrier compensation disputes create tremendous recordkeeping, auditing, and dispute resolution costs.
- These disputes limit carrier ability to formulate business plans by creating uncertainty that impedes access to capital markets.
- Disparate intercarrier compensation schemes cause network inefficiencies.

Today's Broken System Threatens Universal Service

- Interstate telecommunications revenues, on which USF contributions currently are based, are becoming impossible to ascertain and are shrinking.
  - Prices for telecommunications services, especially interstate services, have been falling, thereby increasing universal service fees.
  - Consumers increasingly are bypassing interstate long-distance offerings in favor of wireless, bundled services and information services.
- Failure to fully eliminate implicit support, over the eight years since the 1996 Telecom Act, leaves universal service vulnerable as competition develops.

We must adopt a system that is uniform, provides balanced economic incentives and serves the public interest.

Goals

The Intercarrier Compensation and Universal Service Reform plan is designed to further the following public policy goals:

- ✓ Preserve and enhance universal telephone service in all parts of the U.S.;
- ✓ Facilitate carrier efforts to innovate and offer new services and packages to consumers;
- ✓ Minimize or eliminate arbitrage opportunities created by existing regulations in order to encourage timely deployment of new network technologies and capabilities;
- ✓ Minimize the cost of regulation by eliminating intercarrier disputes over interconnection and compensation arrangements; and
- ✓ Allow consumers and carriers to adjust expectations and business plans by implementing new intercarrier compensation and universal service structures over a reasonable transition period.

Key Features of the Plan

- The Plan is a comprehensive balanced industry effort crafted by representatives of six telecom industry segments.
  - The ICF has met for over a year and developed a comprehensive solution that strikes the balance among diverse interests and provides a stable and sensible transition plan.
- The Plan begins to restructure rates on July 1, 2005 to bring immediate relief from today's broken system
- The Plan achieves a unified system within three years.
- The Plan includes interim FCC checkpoints.

Key Features of the Plan (cont'd)

- The Plan has three primary components:
  - Network Interconnection
    - The Plan contains clear and explicit network rules regarding the technical and financial obligations for the efficient interconnection of diverse carrier networks.
    - New rules take effect on July 1, 2007, providing sufficient time to implement changes.
    - Network rules provide a framework for voluntary carrier negotiations.
  - Rate Restructuring
    - Staged transition achieves a uniform system of intercarrier compensation on July 1, 2008, with a single termination rate for all traffic.
    - This termination rate remains unchanged for two years and then transitions to zero by July 1, 2011.
    - Plan includes protections for rural America, including a continuing optional transport revenue stream for rural carriers.
  - Universal Service
    - New explicit support replaces support implicit in intercarrier compensation.
    - Stabilizes and broadens the universal service funding base.
    - Plan contains modifications that enhance incentives for rural investment.

Summary of Key Events in the ICF Plan

Step	Year beginning July 1:	Network Interconnection	SLC Transition		Pricing Flexibility for Price Cap Carriers	Intercarrier Payments				Universal Service
			Large Carriers	CRTCs		Large Carriers		CRTCs		
						Access Charges	Non-Access	Access Charges	Non-Access	
1	2005	No Change	SLC caps rise in a 4-step transition subject to three constraints: (1) Neither the $6.50 residential SLC cap nor the average residential SLC rate can increase by more than $0.75/month in steps 1 and 2, or by more than $1.00 in Steps 3 and 4. (2) No individual residential SLC rate can increase by more than $0.95/month in Steps 1 and 2, or by more than $1.20/month in Steps 3 and 4. (3) Other SLC caps (non-primary residential and MLB) increase only to the extent they would otherwise be below the residential SLC cap.	Between Step 1 and Step 5, residential SLC caps increase from $6.50 to $9.00 in $0.50 annual increments. In Steps 1-3, other SLC caps increase only to the extent that they would otherwise be below the residential SLC cap.	Step 1 SLC pricing flexibility (subject to revenue limits, constraints to prevent shifting recovery from business to residential users, and safeguards to prevent any effect on USF).	Four equal step plan transitions all interstate and intrastate access charges to SLCs, new universal service support, and a single, uniform rate of $0.000175 per terminating minute.	At step 1, non-access compensation rates unified at $0.0003525 per minute. Between Step 1 and Step 4, a four-step plan transitions all non-access compensation to SLCs, new universal service support, and a single, uniform rate of $0.000175 per terminating minute.	Four equal step plan transitions all interstate and intrastate access charges to SLCs, new universal service support, and a single, uniform rate of $0.000175 per terminating minute.	$0.0125 per minute default recip comp rate established for CRTC-CMRS traffic. Other non-access compensation rates unified at $0.0003525 per minute. Four-step plan transitions all non-access compensation to SLCs, new universal service support, and a single, uniform rate of $0.000175 per terminating minute.	**All at Step 1:** New support mechanisms (ICRM and TNRM) provide support for intercarrier compensation amounts otherwise not recoverable. Maintain rate-of-return principles for rate-of-return carriers. Cap removed from rural high cost loop support mechanism. Changes to Safety Valve Mechanism take effect. Certain rural price cap carriers gain option to elect support from non-rural mechanism. Telephone number and capacity-based unit contribution methodology replaces current interstate revenue-based system.
2	2006									
3	2007	New "Edge" rules take effect. New rates for edge-to-edge interconnection transport, transiting, and optional CRTC terminating transport take effect.				At Step 3, CRTC option to take terminating transport rates to an average of $0.0095 per terminating minute for interconnecting carriers electing to use such transport to reach CRTC network edges.				
4	2008			At Step 4, the MLB SLC cap increase to $10.00.	Additional Step 4 SLC pricing flexibility (subject to safeguards that prevent any effect on USF), including removing end user charges from price caps.	Uniform termination rate of $0.000175 per terminating minute. (Terminating transport rates for CRTCs preserved).				
5	2009		All SLC caps uniform at $10.00 (USF calculated accordingly); inflation indexing takes effect			No Change				
6	2010			(Optional) Residential SLC caps increase to $9.50		Termination rate reduced by 50% to $0.0000875/terminating minute. (Terminating transport rates for CRTCs preserved).				
7	2011			(Optional) Residential SLC cap increases to $10.00		Termination rate reduced to zero. (Terminating transport rates for CRTCs preserved).				
8	2012			No Change		Termination rate remains at zero. (Terminating transport rates for CRTCs preserved).				

The ICF Plan - Network Interconnection (Slides 13 to 18)

Network Interconnection in the ICF Plan

- Network interconnection rules take effect July 1, 2007, concurrent with the new transport rate structure.
- The ICF Plan classifies carrier networks into one of three categories, and specifies rules for interconnection.
  - A Hierarchical Network has commonly-owned access tandems and subtending end offices.
  - A Rural Network is operated by a Covered Rural Telephone Company (CRTC), defined as a carrier that, on July 1, 2005:
    - Is a Rural Telephone Company under the Communications Act, is not a Bell Operating Company or affiliate, and serves fewer than 1,000,000 access lines in its study area; or
    - Is a Two Percent Carrier under the Communications Act with a holding company average of fewer than 19 Switched Access End User Common Line charge lines per square mile served.
  - A Non-Hierarchical Network is neither hierarchical nor rural.

Network Edges

- In general, a network Edge under the ICF Plan is the point where carriers interconnect for the delivery of terminating traffic.
- Network Edges:
  - Must be able to accept all kinds of PSTN traffic.
  - Must be access tandems, end offices, wireless MSCs, POPs, or media gateways.
  - Must allow other carriers to interconnect using multiple methods.
  - Are subject to numerical and locational requirements:
    - Each carrier must have at least one Edge in every LATA where the carrier needs to receive traffic.
    - No carrier may establish more Edges than the total number of ILEC access tandems in the LATA.
    - A carrier having no network within a LATA may designate another carrier to provide the Edge function.
    - Non-CRTC Edges established for interconnection with CRTCs must be located within the contiguous portion of the CRTC study area where the traffic originates or terminates.

Financial Responsibility for Traffic

- Interconnection of like networks (*e.g.*, non-hierarchical to non-hierarchical):
  - The originating network is financially responsible for delivering traffic to the recipient network's Edge.
  - The carrier operating the originating network may purchase switched transiting service from a third carrier to fulfill this obligation.
- Hierarchical with non-hierarchical:
  - Non-hierarchical network must establish interconnection transport between the hierarchical carrier's edge (*i.e.*, access tandem) and its own edges.
  - Hierarchical network must offer such transport at the interstate switched dedicated transport rate, with a 50 percent discount applicable to the first 40 miles on each route.
  - Non-hierarchical network may choose to establish its own or 3rd party transport and, in such case, bears the entire financial responsibility for doing so.

Transit

- Tandem transit service allows exchange of traffic between carriers that are not directly interconnected using the switched network of a carrier that does not bear financial responsibility for carrying the traffic.
- The FCC will be requested to find that tandem transit service is an interstate common carrier offering.
  - All ILECs that are providing such service on July 1, 2005 will continue to do so for the entire 8-year term of the Plan.
  - No discontinuance without Section 214 authorization.
  - Rates subject to Section 201 and 202 standards.
- Rate Caps established for the life of the Plan.
- Interconnection transport trunks cannot be used for transit traffic without compensation to carrier bearing financial responsibility.

Modified Rules for CRTCs

- A CRTC is not required to bear the cost of transporting traffic outside of its service territory, except to reach other CRTCs.
  - A CRTC is entitled to receive traffic at its Edge as follows:
    - Generally, a CRTC will designate at least one Edge within each contiguous portion of its study area; a CRTC may designate its end office as its Edge.
    - An interconnecting carrier may purchase terminating transport to this Edge from the CRTC at prescribed rates, purchase third-party transport, or deliver the traffic using its own facilities.
  - A CRTC must deliver traffic to an interconnecting carrier's Edge or meet point within each contiguous portion of the CRTC's own study area.
- At Step 3 (when the network interconnection rules take effect), a CRTC may elect to use the meet point as a two-way point of interconnection with a carrier that has not established an Edge in a contiguous portion of its study area.
  - Each carrier interconnected in this way bears the financial responsibility for transporting traffic on its side of the meet point.
  - The CRTC would then recover the revenue that terminating transport to its Edge otherwise would have generated from SLCs and USF.

CRTC Interconnection – Special Cases

- Tandem Interconnection
  - The CRTC may designate an access tandem outside a contiguous portion of its study area as its edge for traffic originating from or terminating to its subtending end offices (and must do so for carriers that require equal access for interconnection if the end office does not provide equal access functions).
  - In such a case, each interconnecting carrier bears the financial responsibility for transporting traffic to and from its side of the access tandem (i.*e*., the CRTC pays for the tandem).
- Interconnection between CRTCs
  - CRTCs are treated like any other non-hierarchical carrier when interconnecting with other CRTCs within the LATA
  - Thus, interconnection between CRTCs follows the rules otherwise applicable to interconnection of like networks.
- The Plan allows CRTCs to grow through acquisitions of exchanges

The ICF Plan – Rate Restructuring (Slides 20 to 29)

Overview of Rate Restructuring

- Starting July 1, 2005, all intercarrier compensation transitions in four annual steps over three years to a uniform system of intercarrier compensation with a single termination rate of $0.000175/min for all traffic.
- Beginning July 1, 2007 (with no sunset), carriers receive intercarrier payments from:
  - Transiting services;
  - Interconnection transport; and
  - For CRTCs, terminating transport revenues for inbound traffic.
- Commencing July 1, 2010, the $0.000175/minute termination rate is reduced to zero in two equal steps.
- Rate-regulated carriers shift revenue from intercarrier charges into SLCs and new explicit universal service support.

Access Charges

- Interstate and intrastate switched access charges decline in four equal annual steps beginning July 1, 2005, and are replaced by the uniform termination rate of $0.000175/terminating minute.
- On July 1, 2007, new transit, interconnection transport, and CRTC terminating transport rates replace the existing transport rate structure.
- Additional targeting:
  - Higher rates targeted if severe jurisdictional disparity exists.
  - Thereafter, a CRTC targets originating access first until it reaches price cap interstate weighted average local switching rate.
  - CRTCs may elect to lower access in the higher jurisdiction to $0.0125 at the first step, if this achieves the necessary revenue shift.
- CLEC switched access rates capped at ILEC level.

Other Intercarrier Compensation

- Non-access traffic (*e.g.*, ISP-Bound, wireless and paging traffic, ILEC-CLEC local interconnection)
  - In a state that has ordered bill-and-keep for all non-access traffic, carriers continue to exchange traffic at bill and keep.
  - For other states, the Plan establishes uniform national compensation rates as follows:
    - Step 1 = $0.0003525/minute.
    - Step 2 = $0.0002933/minute
    - Step 3 = $0.0002342/minute
    - Step 4 = $0.000175/minute
  - Growth caps and new market restrictions eliminated for ISP-bound traffic. Out of balance protection mechanism in place for Steps 1-3.

Uniform Termination Charge

- On July 1, 2008, the Plan creates a uniform system of compensation for all traffic (including EAS) at a $0.000175 per minute termination charge.
- Termination charge reduced to $0.0000875 on July 1, 2010; eliminated on July 1, 2011.
  - During Step 5, the FCC will conduct a proceeding to evaluate whether or not this schedule should be lengthened or shortened.
  - Unless and until the FCC made a finding that the schedule in the Plan is *not* in the public interest, the transition continues as provided in the Plan.

Special Rules for CRTCs

- Beginning July 1, 2007, a CRTC may charge for terminating transport for all minutes (including EAS) it carries from the meet point to its Edge.
  - Holding company weighted average of common and dedicated switched terminating transport rates may not exceed $0.0095/minute.
  - Study area weighted average of common and dedicated switched terminating transport rates may not exceed $0.013/minute.
  - An interconnecting carrier may purchase terminating transport to this Edge from the CRTC at prescribed rates, e.g., DS-1's or DS-3's, purchase third-party transport, or deliver the traffic using its own facilities.
- Special Rules re Settlement of CRTC-CMRS Disputes:
  - Reciprocal Compensation applies to:
    - Wireless-to-wireline traffic that originates and terminates in same MTA.
    - Wireline-to-wireless traffic destined for wireless NXX rated in the same LATA and MTA, and the ILEC has the retail relationship for the call to the wireless subscriber.
  - Recip comp rate ramps downward in four annual steps beginning July 1, 2005.
    - Existing agreements honored/extended to accommodate transition.
    - If no agreement exists, Plan establishes initial default rate of $0.0125 per minute.
    - The rate declines to $0.000175 in Step 4.
- CRTCs may seek relief if the rate restructuring causes declines in special access demand.

SLC Transition for Large Carriers (*i.e.*, non-CRTCs)

- Non-CRTC monthly mass market SLC caps increase in four annual steps beginning July 1, 2005, as follows:
  - On July 1, 2005, +$0.75 increase from $6.50 SLC cap in effect on June 30, 2005, to $7.25/month. Average SLC increase cannot exceed $0.75.
  - On July 1, 2006, +$0.75 from $7.25 SLC cap in effect on June 30, 2006, to $8.00/month. Average SLC increase cannot exceed $0.75.
  - On July 1, 2007, +$1.00 from $8.00 SLC cap in effect on June 30, 2007, to $9.00/month. (Or more, if needed because of targeted flash cut of interconnection transport rates). Average SLC increase cannot exceed $1.00.
  - On July 1, 2008, +$1.00 from $9.00 SLC cap in effect on June 30, 2008, to $10.00/month. Average SLC increase cannot exceed $1.00.
- No individual mass market customer's SLC may increase by more than $0.95 in Years 1 and 2 and $1.20 in Years 3 and 4 of the Plan.
- Non-primary line and MLB SLC caps increase concurrently to the extent they otherwise would be below the mass market cap.
- Effective July 1, 2009, the only constraint on the SLC rate is the $10.00 per month cap, plus inflation.

SLC Transition for CRTCs

- Monthly residential SLC caps increase $0.50 each year, to $9.00, effective July 1, 2005.
- Other SLC caps increase in tandem, to the extent they otherwise would be lower than the residential SLC.
- Monthly MLB SLC caps increase to $10.00 in July 1, 2008.
- The CRTC <u>may</u> elect to increase other SLC caps to the same level by increasing them to $9.50 on July 1, 2010 and to $10.00 on July 1, 2011.
- No indexing for inflation.

SLC Transition Overview

Year beginning July 1:		2004 (current rules)	2005	2006	2007	2008	2009	2010	2011 and 2012
Step:		--	1	2	3	4	5	6	7 and 8
Large Carriers (*i.e.*, non CRTCs)	Maximum monthly Res/SLB SLC cap[1]	$6.50	$7.25	$8.00	$9.00 (subject to adjustment to accommodate transport "flip")	$10.00	$10.00 plus inflation	$10.00 plus inflation	$10.00 plus inflation
	Average overall SLC Increase [2 3]	--	$0.75	$0.75	$1.00 (subject to adjustment to accommodate transport "flip")	$1.00	--	--	--
	Maximum increase in any individual SLC [3]	--	$0.95	$0.95	$1.20 (subject to adjustment to accommodate transport "flip")	$1.20	--	--	--
CRTCs	Maximum monthly Res/SLB SLC cap	$6.50	$7.00	$7.50	$8.00	$8.50	$9.00	$9.00 or $9.50	$9.00 or $10.00
	Maximum monthly MLB SLC cap	$9.20	Equal to Res/SLB SLC cap, but not less than the MLB SLC cap calculated under 6/30/04 rules			$10.00	$10.00	$10.00	$10.00

[1] MLB and Non-Primary Residential SLC caps increase to the extent they are below these caps.
[2] The average is calculated on a study area basis.
[3] If the increase in a given year is less than the amount set forth in the table, the increase in the next year may be correspondingly greater.

Price Cap LEC SLC Pricing Flexibility

- Effective July 1, 2005:
  - Consumer protection safeguards:
    - Per-line SLC caps and increase limits outlined above;
    - Section 201 and 202 nondiscrimination standards; and
    - Overall revenue limit on SLC recovery.
  - Mass-Market Service Category and Enterprise Service Category prevent recovery shifting from enterprise to mass market customers.
  - Geographic deaveraging by zone (up to four zones, with at least 15 percent of lines in each).
  - Application of SLCs to Centrex, ISDN, other derived channel services, by service category Volume, term, and growth commitment pricing.
  - Contract tariffs, not subject to price caps or revenue limits.
  - SLC may be rolled into the price of service bundles, but must be tracked separately.

Price Cap LEC SLC Pricing Flexibility (cont'd)

- Additional Pricing Flexibility effective July 1, 2008:
  - SLC revenue limits would no longer apply.
  - The per line SLC cap would not apply to end user charges offered <u>under contract tariffs</u>; per line SLC cap otherwise remains in effect.
  - No constraints on the establishment of pricing zones.
  - Tariff filings for price changes made on one day's notice.
  - Parts 61 and 69 of the Commission's rules applicable to price cap carrier end user charges no longer apply.
  - Safeguards prevent pricing flexibility from affecting the calculation of USF support.

The ICF Plan – Universal Service (Slides 31 to 38)

New Support Mechanisms

- Two new uncapped support mechanisms:
  - Intercarrier Compensation Recovery Mechanism (ICRM), applicable to areas served by BOCs and other non-CRTC ILECs.
  - Transitional Network Recovery Mechanism (TNRM), applicable to areas served by CRTCs (price cap and non-price cap).
- Purpose is to provide explicit support for intercarrier compensation amounts otherwise not recoverable in order to maintain and preserve universal service.
- Primary differences between the two mechanisms:
  - Disaggregation options.
  - Extent of eligibility of CETCs to receive support.

Intercarrier Compensation Recovery Mechanism (ICRM)

- Available to all ETCs that compete in non-CRTC areas.
- Price cap carrier that loses lines to competition loses per-eligible-line support.
- Disaggregation Options:
  - Uniform, Per-line Amount (i.e., no disaggregation)
  - Zone Disaggregation Plan
  - Residential Targeting Plan
    - All support targeted to residential lines based on a showing that the total revenue opportunity for serving a residential line is less than that for serving a business line.
    - Once the revenue opportunities are equalized, the ILEC must continue to target residential lines, increase the MLB SLC by an equal amount, reducing its total ICRM support by the same amount.

Transitional Network Recovery Mechanism (TNRM)

- Supports CRTCs and competing CETCs that lose access revenues as a result of the plan (*i.e.*, not CMRS).
- Provides revenue that cannot be recovered under SLC cap.
- Disaggregated according to current FCC rules governing disaggregation of rural carrier support.
- Available to some CETCs:
  - CETCs that lose access revenues as a result of the plan (*i.e.*, not CMRS) are eligible for TNRM if they compete with a TNRM recipient (*i.e.*, CRTC).
  - Per-eligible-line amount available to CETC varies with changes to CRTC revenue requirement, but not based on changes in CRTC line count..
- Price cap CRTC that loses eligible lines also loses TNRM support.
- TNRM support for rate-of-return CRTC based on revenue requirement, independent of line count.
- Subject to FCC review of availability to CETCs in 2013.

Changes to Existing USF Mechanisms

- Rural High Cost Loop Support
  - Cap removed.
  - National Average Unseparated Cost Per Working Loop unfrozen.
  - Rule reducing support for carriers with over 200,000 lines eliminated.
- Safety Valve Support
  - Support augmented in the partial year and first full year after an acquisition closes.
  - Existing (5 percent) cap on aggregate safety valve support retained.
  - New “Safety Valve II” support for switching and transport created.
- Option to Elect Non-Rural High Cost Mechanism
  - A rural price cap carrier who is a CRTC under the Plan, does not receive rural high cost loop support and is not affiliated with any ILEC within the same holding company that receives such support may elect to receive support from the non-rural high cost mechanism.
  - Subject to “all-or-nothing” and “one-way door” restrictions (with carve-out for acquisitions).

Changes to Existing Mechanisms (cont'd)

- Portability of Existing Support
  - ETC Certification
    - ICF takes no position on any change to ETC eligibility requirements or guidelines.
    - All ETCs should be subject to fully comparable, competitively and technologically neutral requirements for customer service, service quality, and provisioning of service to requesting customers within a reasonable period of time.
  - Existing USF support per-line amount to remain portable to each ETC that satisfies the applicable designation requirements.
  - Per-eligible-line amount available to CETCs will adjust based on changes to applicable ILEC revenue requirement, but not based on the ILEC line losses.

Contribution Methodology

- Single contribution methodology used to collect funding for all existing and new universal service support mechanisms.
- “Unit-based” assessment of unique working telephone numbers and non-switched, high-speed, dedicated network connections.
- Carriers recover contribution amounts from end users that cause the assessments.

Contribution Methodology (cont'd)

- Unit assessments:
  - Telephone Numbers:
    - Each unique working telephone number: 1 unit
    - CMRS carriers (nationwide), CRTCs, and CRTC competitors may phase this in for additional numbers in a residential household account
  - Residential:
    - DSL, cable modem and other high-speed, non-circuit-switched connections assessed 1 unit.
    - Contribution obligations of DSL and cable modem services harmonized.

Contribution Methodology (cont'd)

- Unit assessments: (cont'd)
  - Business:
    - Non-switched, dedicated network connections with capacity of less than 1.5mbps assessed 1 unit.
    - Non-switched, dedicated network connections with capacity of at least 1.5mbps but less than 45mbps assessed 5 units.
    - Non-switched, dedicated network connections with capacity of at least 45mbps but less than 200mbps assessed 40 units.
    - Non-switched, dedicated network connections with capacity of 200mps or greater assessed 100 units.
    - At least triennially, FCC to examine whether these thresholds are commercially reasonable in light of advances in technology.

The Benefits of the ICF Plan (Slides 40 to 46)

The ICF Plan Benefits Consumers

- The ICF Plan will enable consumers more easily to purchase the services they want, the way they want, in the packages they want, in affordable bundles.
  - The Government no longer will force consumers arbitrarily to distinguish between “local,” “long distance,” “wireless,” and “Internet” traffic.
- Consumers will see better service and more competition.
  - The Plan resolves ongoing disputes regarding network interconnection and intercarrier compensation, allowing carriers to focus their resources on serving customers.
  - More competition and new and innovative services will develop as carriers devote more resources to expanding their product and service offerings.

The ICF Plan Benefits Consumers

- The ICF Plan puts customers first.
  - Focus is on facilitating delivery to consumers of innovative products and bundles they want.
- The ICF Plan will benefit rural and low-income consumers.
  - Local calling scopes will expand, reducing consumer toll bills.
  - Consumers will gain greater choice in broadband and long distance services.
  - Carriers will be able more easily to offer the same bundles in urban and rural areas.
  - The ICF plan expands Lifeline funding to cover increases in subscriber line charges.

The ICF Plan Benefits Consumers

- The Plan will preserve and advance universal service.
  - Moves all universal service support to sustainable and transparent mechanisms.
  - Ensures funding collection will be sustainable for the foreseeable future.
  - Prevents destabilization of the system caused by exploitation of current regulatory-induced arbitrage opportunities.
  - Protects low-income consumers from rate increases.
  - Enables economically rational pricing of services and promotes efficient competition.
  - Promotes comparability of urban and rural service offerings and prices.

Increasing SLCs Have Not Reduced Low Income Consumer Telephone Penetration (Household with Income of $9,999* or Less)

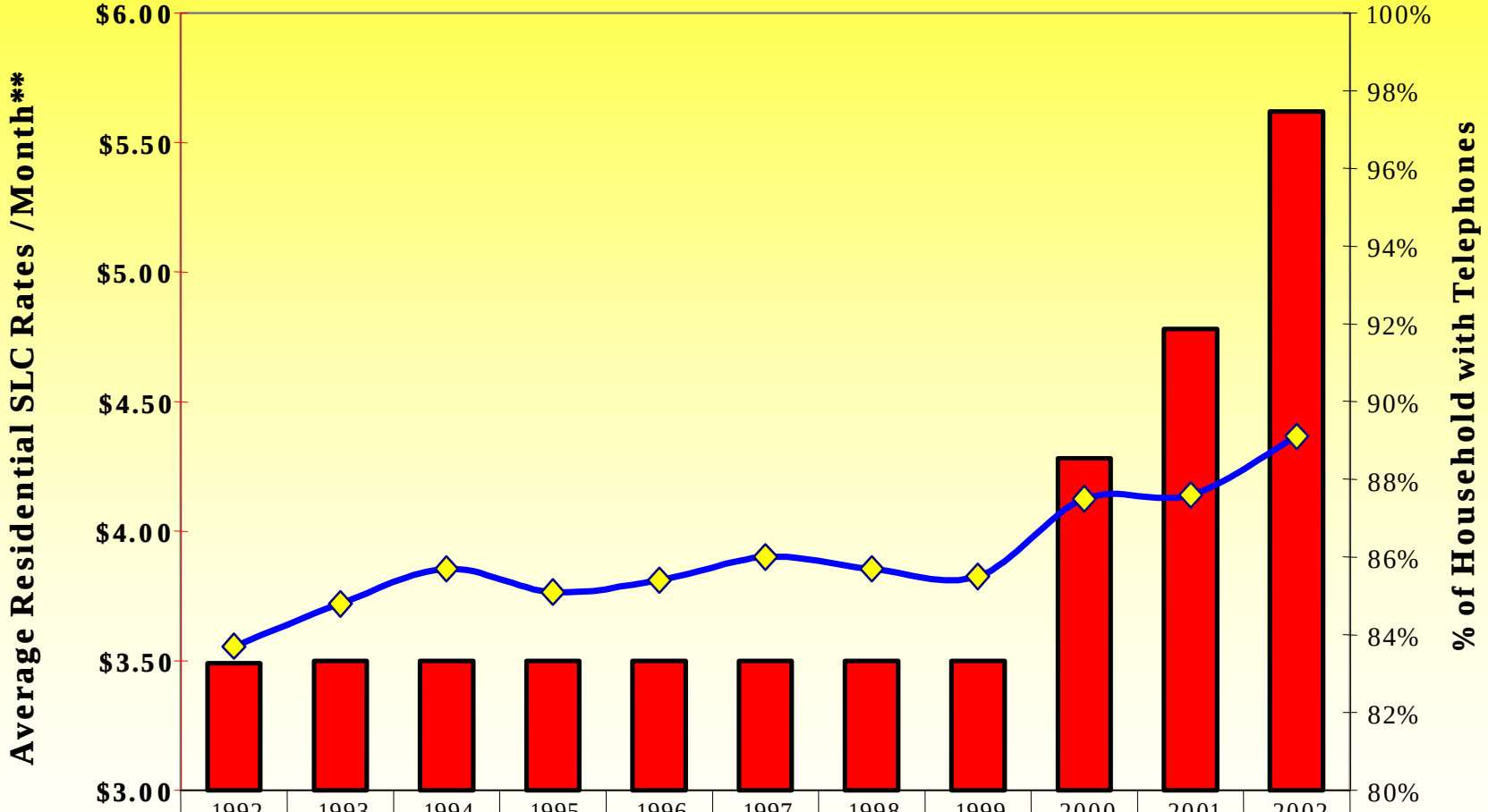

	1992	1993	1994	1995	1996	1997	1998	1999	2000	2001	2002
Residential SLC	3.49	3.5	3.5	3.5	3.5	3.5	3.5	3.5	4.28	4.78	5.62
Tel. Penetration	83.70%	84.80%	85.70%	85.10%	85.40%	86.00%	85.70%	85.50%	87.50%	87.60%	89.10%

* This income is in 1984 dollars that equates to $18,000 in today's dollars

**As of July 1 of Each Year

LATHAM & WATKINS LLP

The ICF Plan Benefits the U.S. Economy

- The ICF Plan creates certainty in the telecommunications industry.
- The Plan creates a clear set of uniform network interconnection and compensation rules.
  - The ICF plan finally, fundamentally, and completely replaces the confusing patchwork of regulations that has crippled the industry and led to inefficient network designs.
  - Resolves ongoing intercarrier compensation disputes and provides a more stable regulatory environment.
  - Minimizes arbitrage opportunities and competitive distortions by eliminating uneconomic distinctions between:
    - Local and long distance;
    - Wireline and wireless;
    - Interstate and intrastate;
    - VOIP and TDM.

The ICF Plan Benefits the U.S. Economy (cont'd)

- The Plan facilitates business planning and access to capital markets.
  - Replaces a system that is on the verge of collapse.
  - Provides greater regulatory stability and certainty.
  - Reduces regulation-driven carrier administrative expenses.
    - Minimizes billing, operations, traffic policing, and litigation costs.
    - Permits more efficient use of network facilities.
- The Plan harmonizes today's rules with existing and new technologies.
  - Lessens the pressure to regulate VOIP by making compensation in the circuit-switched world compatible with wireless and VOIP services.
  - Ensures that all providers contribute equitably to support universal service.

The ICF Plan Benefits the U.S. Economy (cont'd)

- The ICF Plan ensures robust rural networks and universal availability of affordable service.
  - Ensures that rural carriers do not bear the cost of transporting traffic outside their service areas.
  - Provides for lower subscriber line charge caps for rural ILECs.
  - Preserves rate-of-return regulation.
  - Allows for a continuing carrier revenue stream for delivery of traffic to rural carriers.
  - Lifts cap on high-cost loop support.
  - Stabilizes and expands the base of the federal universal service fund.
  - Enhanced safety valve mechanism to reward rural investment.

Typical Interconnection Arrangements in Today's Environment

Disclaimer: The POI locations are for illustrative purposes only. POI locations may vary for each call flow, are subject to various disputes and varying state arbitration decisions.

Intercarrier Compensation Rates

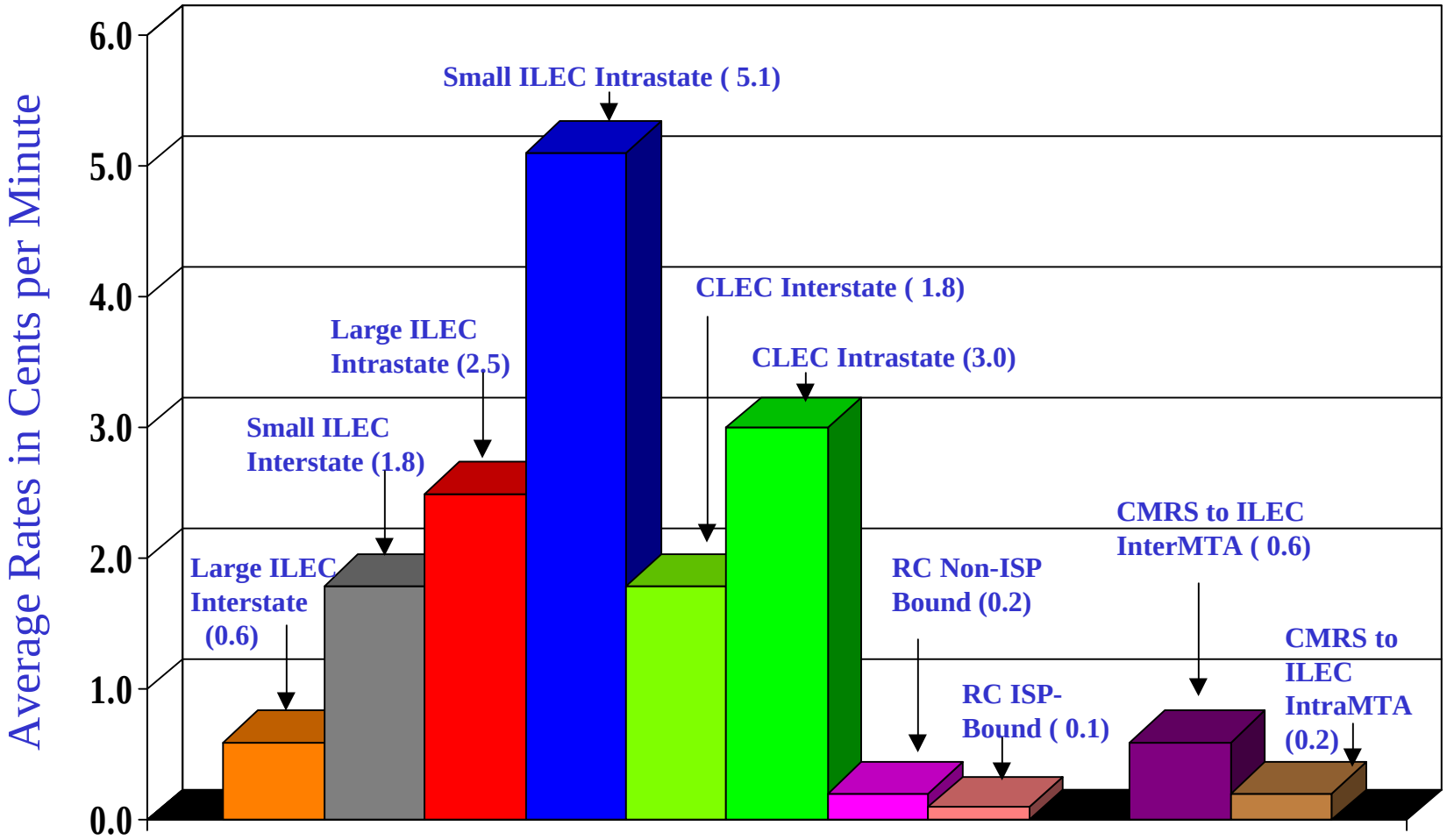

High (¢/min):	1.5	8.9	9.9	34.9	6.8	35.9	0.3	0.1	8.9	0.3
Low (¢/min):	0.5	0.3	0.4	0.7	0.2	0.4	0.0	0.0	0.2	0.0

IXC & ILEC Traffic – Tandem Routed

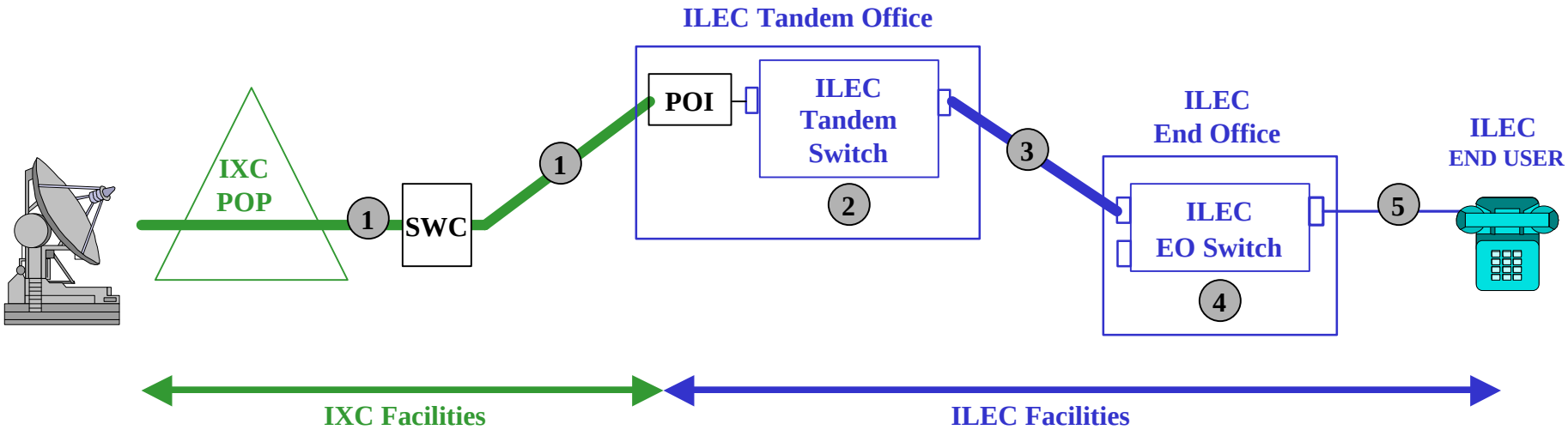

Financial Responsibility: IXC financially responsible for the cost of both directions of traffic from the ILEC end-user to IXC POP. Subject to widely varying rates depending on jurisdiction (interstate/intrastate) and widely varying local/long distance calling scopes.

For Both Directions of Traffic

	NETWORK FUNCTION	PAID BY	PAID TO
1	Dedicated Transport	IXC	Dedicated Transport Provider*
2	Tandem Switching	IXC	ILEC
3	Common Transport	IXC	ILEC
4	End Office Switching	IXC	ILEC
5	Common Line	IXC	ILEC

*IXC may self-provision.

IXC & ILEC Traffic – End Office Routed

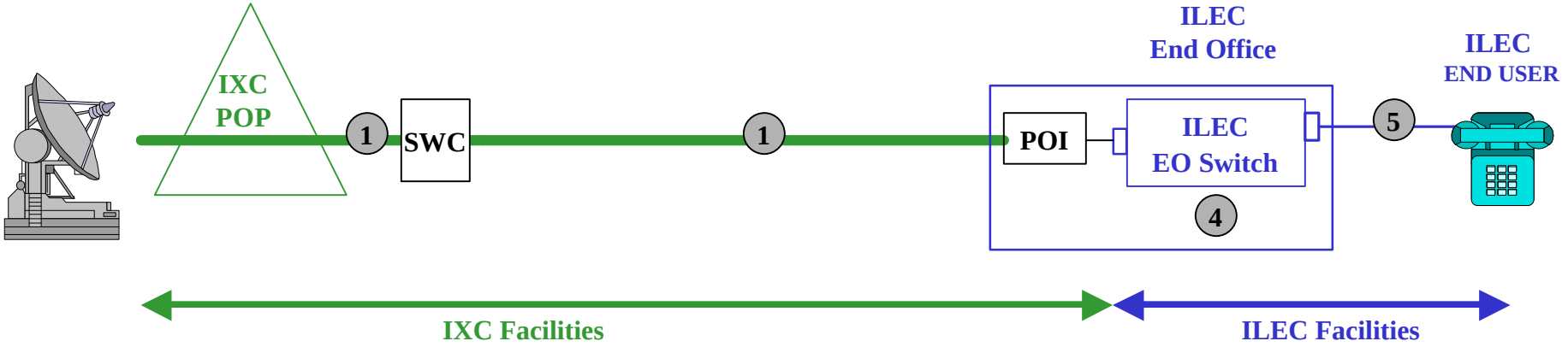

Financial Responsibility: IXC financially responsible for the cost of both directions of traffic from the ILEC end-user to IXC POP. Subject to widely varying rates depending on jurisdiction (interstate/intrastate) and widely varying local/long distance calling scopes.

For Both Directions of Traffic

	NETWORK FUNCTION	PAID BY	PAID TO
1	Dedicated Transport	IXC	Dedicated Transport Provider*
4	End Office Switching	IXC	ILEC
5	Common Line	IXC	ILEC

*IXC may self-provision.

ILEC to ILEC

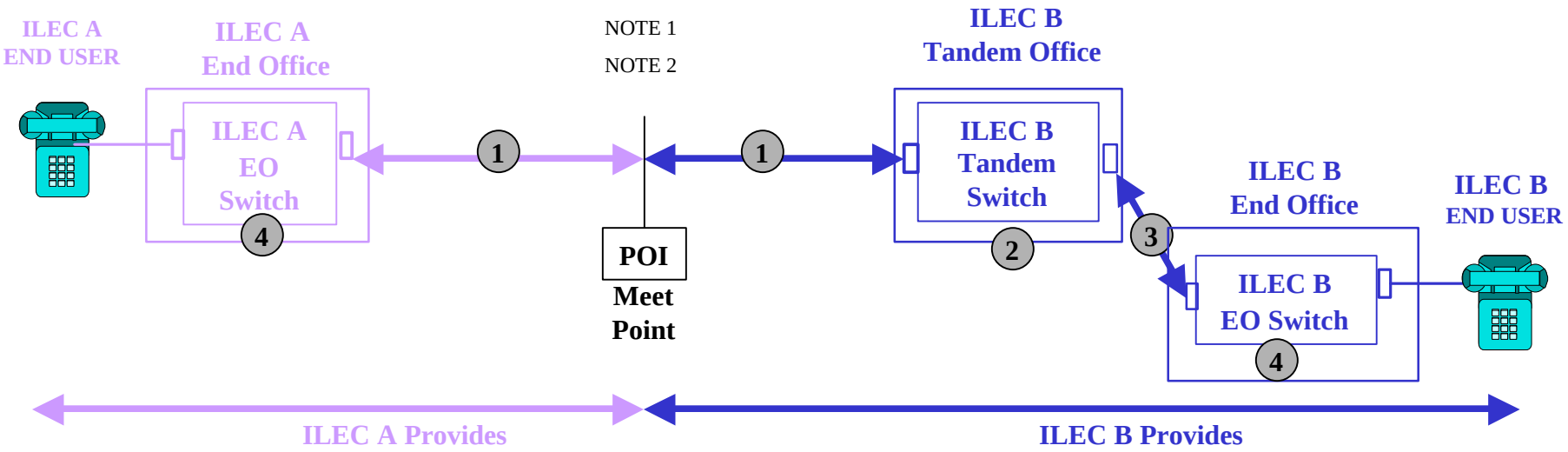

Financial Responsibility: Each company is responsible for facilities on its side of the POI or meet point. Generally, the financial responsibility is Calling Party Network Pays (CPNP). However, varying rate structures lead to asymmetrical charges and transport obligations. Often times the compensation arrangement is bill and keep.

		Originating from ILEC A		Originating from ILEC B	
	NETWORK FUNCTION	**PAID BY**	**PAID TO**	**PAID BY**	**PAID TO**
1	Transport – jointly provisioned	Note 3	Note 3	Note 3	Note 3
2	Tandem Switching	ILEC A	ILEC B	N/A	N/A
3	Common Transport	ILEC A	ILEC B	N/A	N/A
4	End Office Switching	ILEC A	ILEC B	ILEC B	ILEC A

Note 1 – Carries traffic from a variety of carriers.

Note 2 – Separate facilities are established between the ICO and ILEC for carrying EAS type traffic.

Note 3 – Each ILEC provides facilities for both originating and terminating traffic to the POI or meet point.

CLEC & ILEC Traffic – Tandem Routed

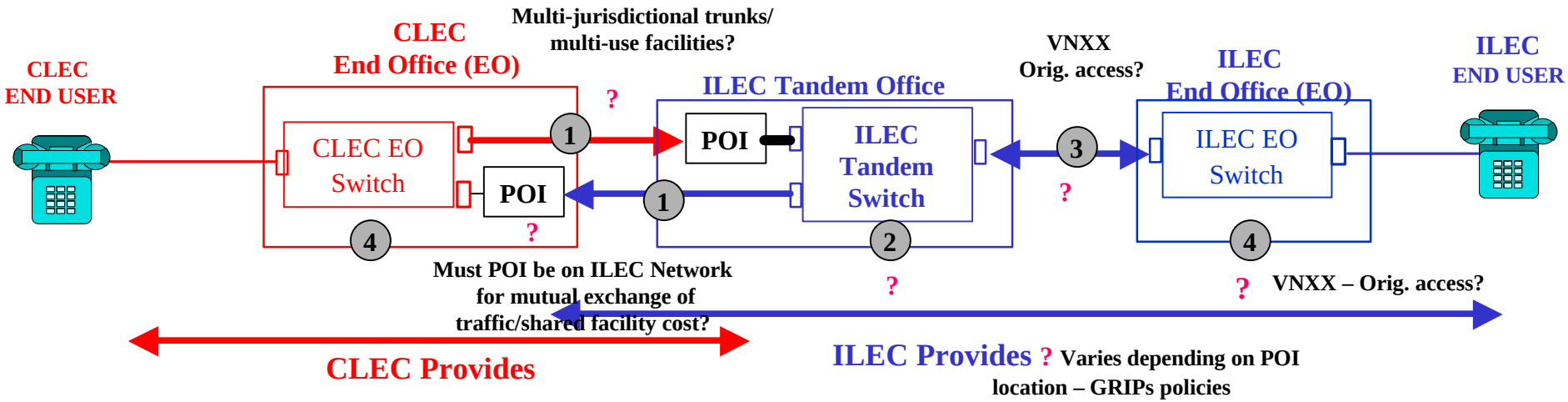

Financial Responsibility: CPNP.

Areas of Dispute: 1) Section 51.711(a)(3)(application of the tandem rate rule); 2) Use of Virtual NXX; 3) Network Function 1 may be subject to dispute regarding both physical & financial responsibility.

		Originating from CLEC			Originating from ILEC	
	NETWORK FUNCTION	**PAID BY**	**PAID TO**		**PAID BY**	**PAID TO**
1	Dedicated Transport	CLEC	Dedicated Transport Provider*		ILEC	CLEC
2	Tandem Switching	CLEC	ILEC		N/A	N/A
3	Common Transport	CLEC	ILEC		N/A	N/A
4	End Office Switching	CLEC	ILEC		ILEC	CLEC

*CLEC may self-provision.

CLEC to CLEC Traffic

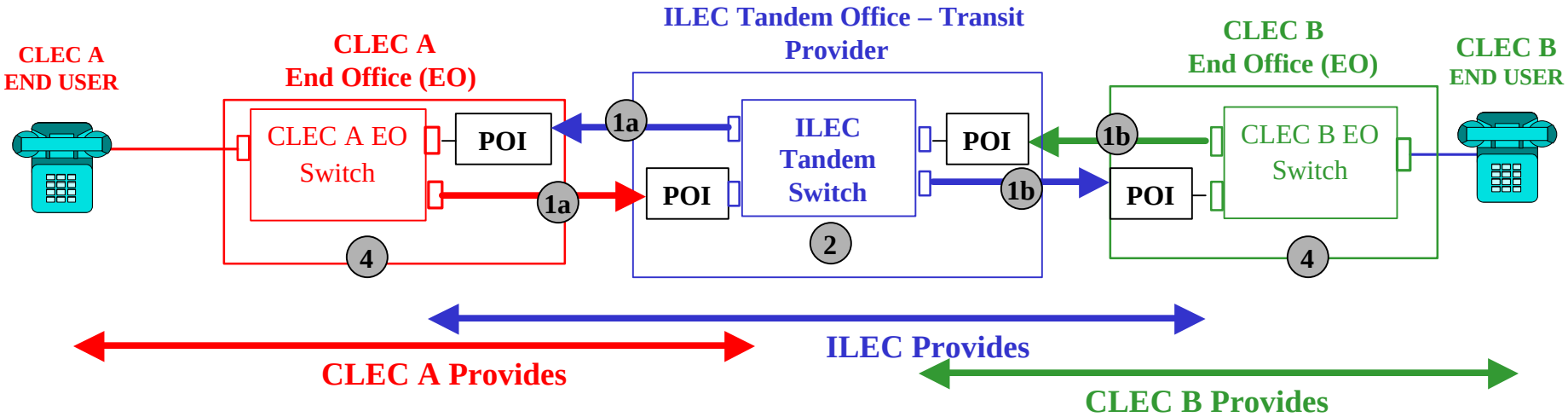

Financial Responsibility: CPNP governs traffic exchange. Originating carrier pays ILEC for transiting service. Switching and transport (excluding ILEC switching and transport) is typically bill & keep.

Area of Dispute:. 1) Network Function 1a & 1b may be subject to dispute regarding both physical & financial responsibility; 2) ILEC tandem transit obligation/rate

		Originating from CLEC A		Originating from CLEC B	
	NETWORK FUNCTION	**PAID BY**	**PAID TO**	**PAID BY**	**PAID TO**
1	Dedicated Transport	a) CLEC A b) CLEC A	a) CLEC A or ILEC b) CLEC B	a) CLEC B b) CLEC B	a) CLEC A or ILEC b) CLEC B or ILEC
2	Tandem Switching	CLEC A	ILEC	CLEC B	ILEC
4	End Office Switching	CLEC A	CLEC B	CLEC B	CLEC A

Independent Company (ILEC Tandem Routed) & CLEC

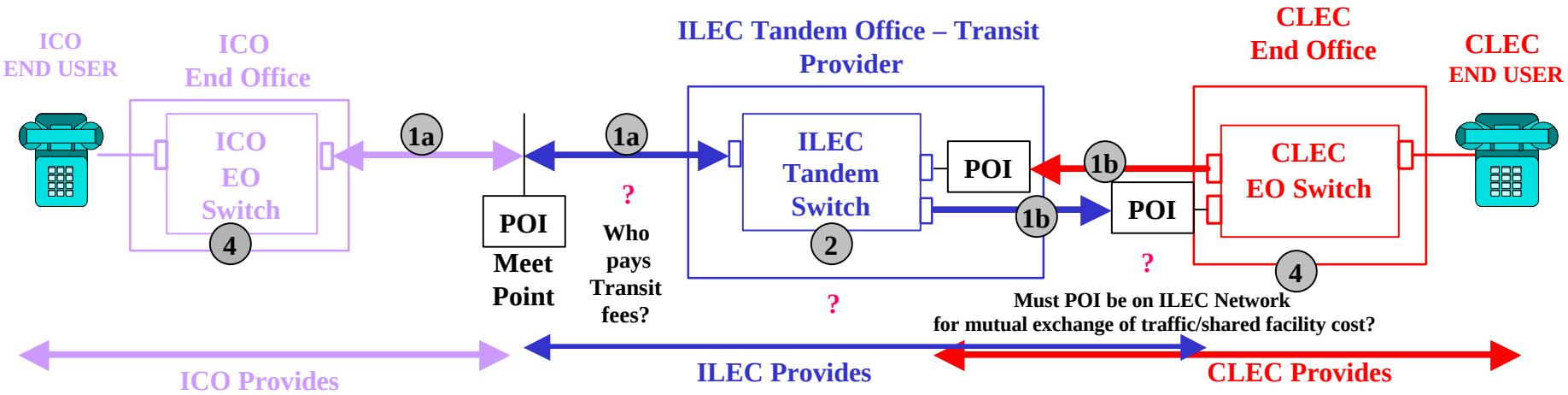

Financial Responsibility: The ILEC and ICO are responsible for facilities on their side of the POI or meet point. CPNP for transiting, transport and End Office switching.

Areas of Dispute: 1) ICOs dispute that they are obligated to pay for transiting of calls beyond the meet point because they believe the POI needs to be on the ICO's network (1a and 2); 2) Network Function 1b may be subject to dispute regarding both physical & financial responsibility. 3) ILEC tandem transit obligation/rate

		Originating from ICO		Originating from CLEC	
	NETWORK FUNCTION	**PAID BY**	**PAID TO**	**PAID BY**	**PAID TO**
1	Transport a) jointly provisioned b) dedicated	a) ICO b) ICO	a) ILEC* b) CLEC or ILEC	a) CLEC b) CLEC	a) ILEC & ICO b) CLEC or ILEC
2	Tandem Switching	ICO	ILEC	CLEC	ILEC
4	End Office Switching	ICO	CLEC	CLEC	ICO

* ICO will provide facilities to the meet point and ILEC will charge the ICO for facilities from meet point to the tandem.

Independent Company (ILEC Tandem Routed) & IXC

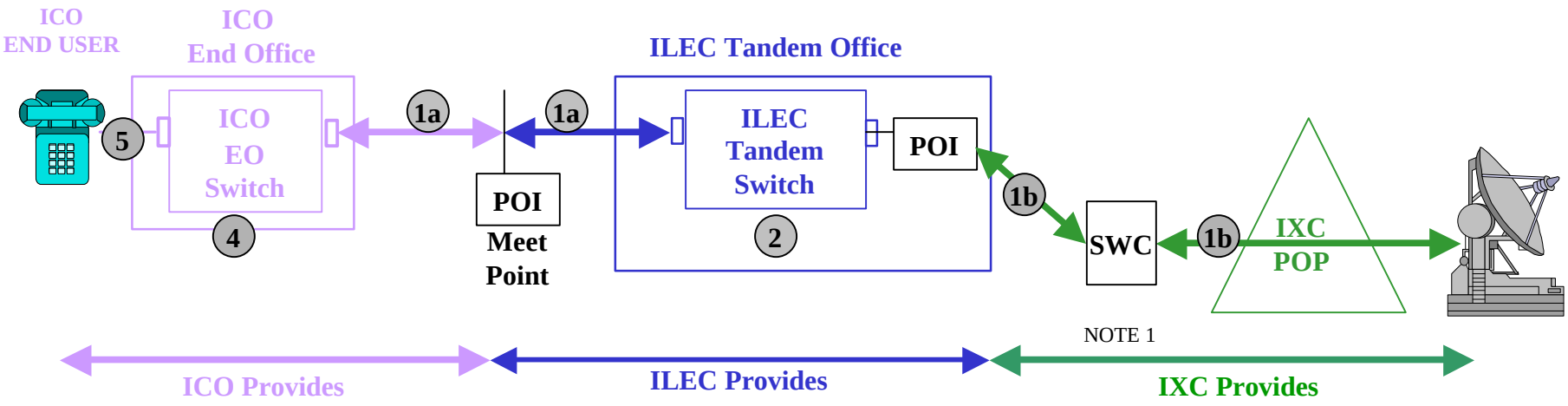

Financial Responsibility: Each company is responsible for facilities on its side of the POI or meet point. IXC is financially responsible for traffic in both directions from the ICO End User to the IXC POP. Rates vary widely by jurisdiction and widely varying ILEC local/long distance calling scopes.

For Both Directions of Traffic

	NETWORK FUNCTION	PAID BY	PAID TO
1	Transport a) jointly provisioned b) dedicated	a) IXC b) IXC*	a) ICO & ILEC b) Dedicated Transport Provider*
2	Tandem Switching	IXC	ILEC
4	End Office Switching	IXC	ICO
5	Common Line	IXC	ICO

* IXC may self-provision

Note 1 – The most typical arrangement is for the IXC to direct route to the ICO where traffic volumes warrant such direct connection.

Independent Company (ILEC Tandem Routed) & CMRS Provider (IntraMTA Traffic)

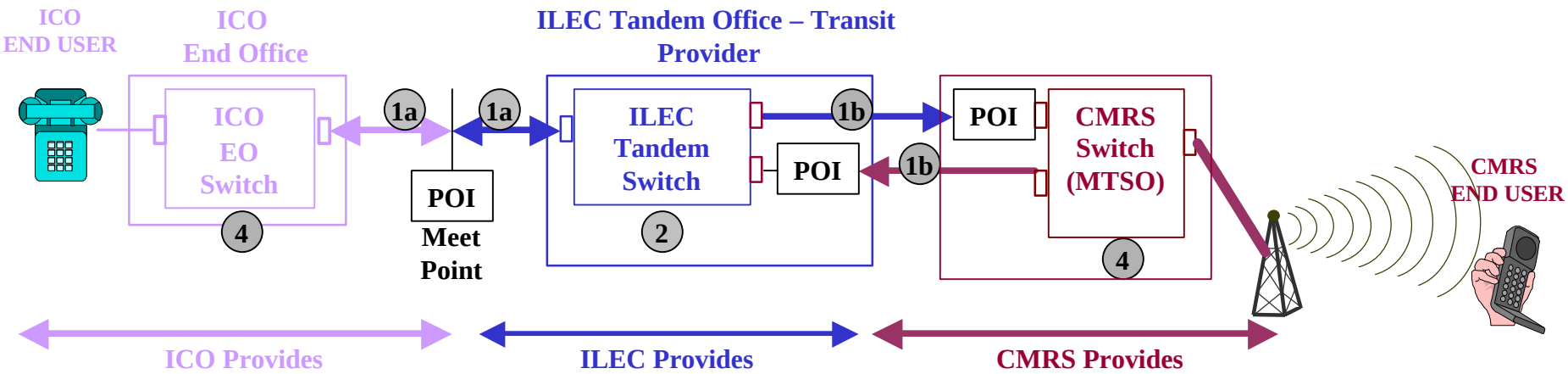

Financial Responsibility: Each company is responsible for facilities on its side of the POI or meet point. The financial responsibility is CPNP for IntraMTA traffic.

Areas of Dispute: 1) What traffic is subject to reciprocal compensation (IntraMTA rule)?; 2) Do access charges apply to CMRS providers?; 3) Who should pay for the transiting function provided by the ILEC (1a, 2)?; 4) ICOs dispute that they are obligated to pay for transiting of calls beyond the meet point; 5) Network Function 1b may be subject to dispute regarding physical & financial responsibility; 6) Disputes surrounding separate rating & routing points for NXXs;
7) Dispute over Section 51.711(a)(3) (application of the tandem rate rule); 8) ILEC tandem transit obligation / rate

		Originating from ICO		Originating from CMRS	
	NETWORK FUNCTION	**PAID BY**	**PAID TO**	**PAID BY**	**PAID TO**
1	Transport a) jointly provisioned b) dedicated	a) ICO b) ICO	a) ILEC b) CMRS or ILEC	a) CMRS b) CMRS*	a) ICO & ILEC b) CMRS or ILEC*
2	Tandem Switching	ICO	ILEC	CMRS	ILEC
4	Switching a) End Office b) MTSO Switching	b) ICO	b) CMRS	a) CMRS	a) ICO

*Typically, the ILEC will provision the facility and charge the CMRS provider based on the percent of the facility used.

Independent Company to CMRS Provider Routed via an IXC (IntraMTA Traffic)

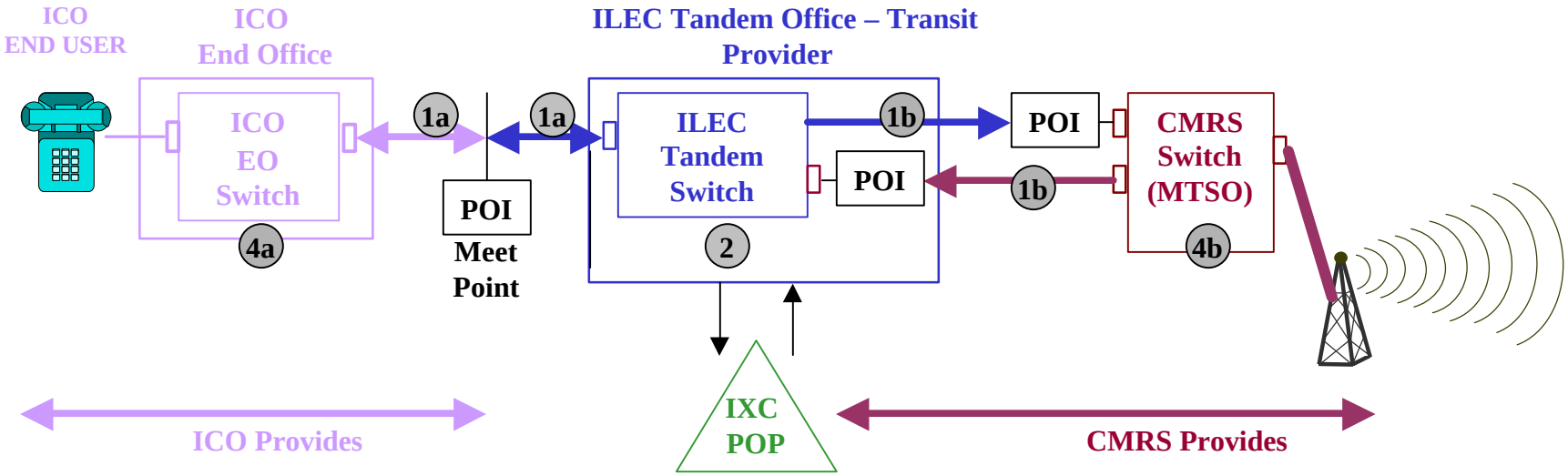

Areas of Dispute: 1) ICOs often contest any obligation to deliver traffic outside their exchange boundary. As a result, they will send traffic destined to a CMRS carrier via an IXC. In this circumstance, disputes arise over the appropriate compensation regime to be applied (access or reciprocal compensation) and which carrier bears financial responsibility for terminating the call, including transiting; 2) ILEC tandem transit obligation/rate

Originating from ICO

	NETWORK FUNCTION	PAID BY	PAID TO
1	Transport a) Jointly provisioned b) Dedicated	a) IXC b) IXC	a) ILEC & ICO b) ILEC or CMRS
2	Tandem Switching	IXC	ILEC
4	Switching a) End Office b) MTSO Switching	a) IXC b) Note 1	a) ICO b) Note 1

Note 1 – CMRS carriers receive no compensation from interconnecting carriers for MTSO switching.

CMRS Provider & ILEC (IntraMTA Traffic)

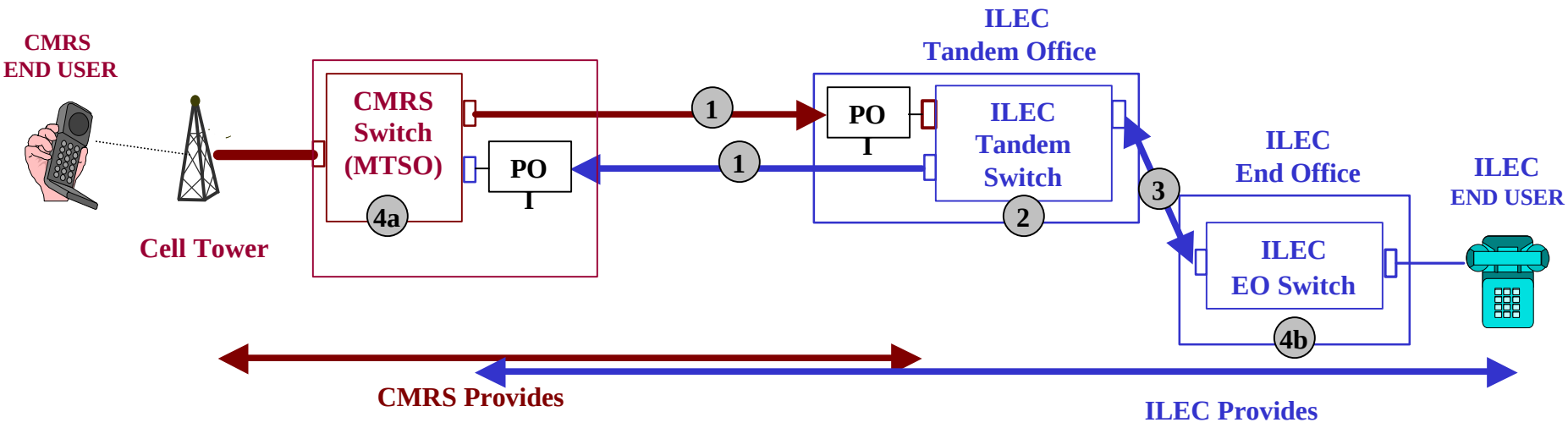

Financial Responsibility: CPNP for traffic originating and terminating within the same MTA.

Areas of Dispute: 1) When traffic originates on an ILEC network and terminates outside the ILEC local calling area, many anomalies and controversies exist; 2) Section 51.711(a)(3) (application of the tandem rate rule); 3) See slides 7 & 8 & 9 for additional areas of dispute.

		Originating from CMRS		Originating from ILEC	
	NETWORK FUNCTION	**PAID BY**	**PAID TO**	**PAID BY**	**PAID TO**
1	Transport	CMRS*	ILEC or CMRS*	ILEC*	CMRS or ILEC*
2	Tandem Switching	CMRS	ILEC	N/A	N/A
3	Common Transport	CMRS	ILEC	N/A	N/A
4	Switching a) MTSO Switching b) End Office	b) CMRS	b) ILEC	a) ILEC	a) CMRS

* Typically, the ILEC will provision the facility and charge the CMRS provider based on the percent of the facility used.

CMRS Provider & Other Carriers (CMRS & CLECs)

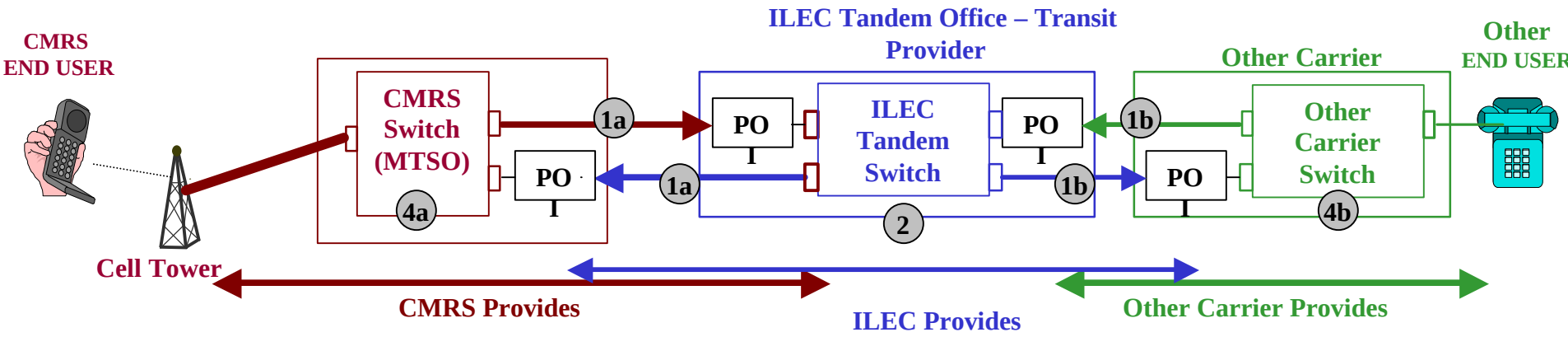

Financial Responsibility: CPNP for traffic subject to reciprocal compensation. Switching and transport (excluding ILEC switching and transport)is typically bill & keep.

Areas of Dispute: 1) What traffic is subject to reciprocal compensation (IntraMTA rule)?; 2) Network Function 1b may be subject to dispute regarding both physical & financial responsibility; 3) ILEC tandem transit obligation/rate

		Originating from CMRS			Originating from Other Carrier	
	NETWORK FUNCTION	**PAID BY**	**PAID TO**		**PAID BY**	**PAID TO**
1	Transport	a) CMRS* b) CMRS	a) ILEC or CMRS* b) OTHER or ILEC		a) OTHER b) OTHER	a) CMRS or ILEC* b) OTHER or ILEC
2	Tandem Switching	CMRS	ILEC		OTHER	ILEC
4	Switching a) MTSO Switching b) End Office	b) CMRS	b) OTHER		a) OTHER	a) CMRS

* Typically, the ILEC will provision the facility and charge the CMRS provider based on the percent of the facility used.

ICF Proposal Diagrams

The following slides depict interconnection and compensation under the ICF Plan

August 13, 2004

Network Diagrams

- These slides depict interconnection under the default network interconnection rules, including CRTC Transport implemented at start of Step 3.
- Only difference between intercarrier compensation at Steps 4-6 and Step 7 is in the payment for the terminating (End Office) Switching & Loop. At Steps 4-6, this is paid by interconnecting carrier (not transit provider) to the terminating carrier.
- Uniform termination rate, implemented at the start of Step 4:
  - .000175/Min. Steps 4 & 5
  - .0000875/Min. Step 6

IXC - ILEC Traffic – Tandem Routed
(Non-Hierarchical to Hierarchical)

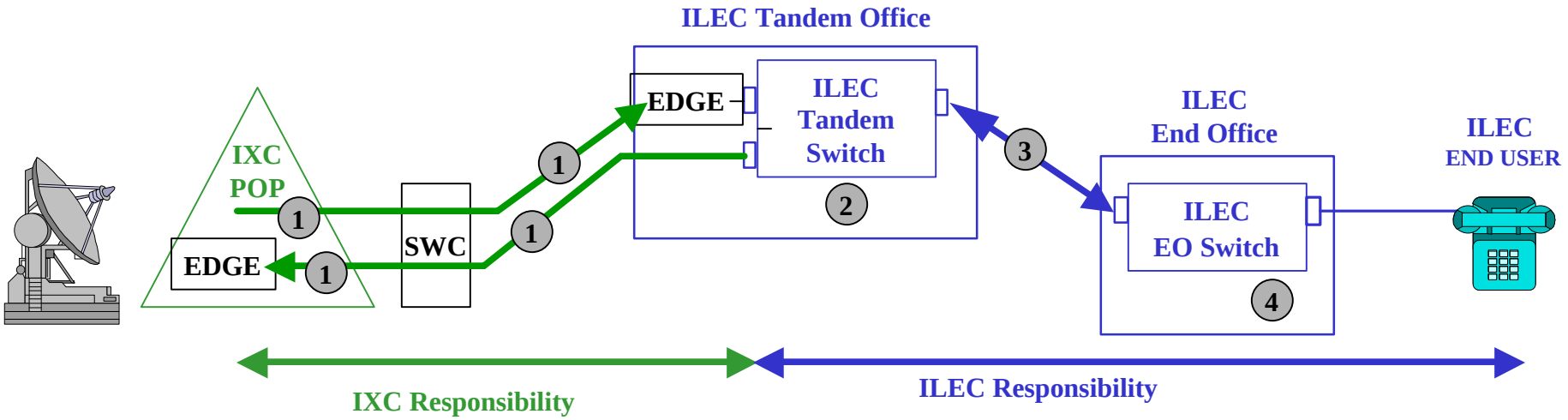

		Originating from IXC		Originating from ILEC	
	NETWORK FUNCTION	**PAID BY**	**PAID TO**	**PAID BY**	**PAID TO**
1	Interconnection Transport (Note 1)	IXC	Interconnection Transport Provider	IXC	Interconnection Transport Provider
2	Tandem Switching	ILEC	Bill and Keep	ILEC	Bill and Keep
3	Common Transport	ILEC	Bill and Keep	ILEC	Bill and Keep
4	End Office Switching and Loop	IXC (Step 4-6) ILEC (Step 7)	ILEC Bill and Keep	ILEC	Bill and Keep

Note 1: Interconnection Transport may be self-provisioned by the Non-Hierarchical Network, provisioned by a third party, or leased by the Non-Hierarchical Network from the Hierarchical Network at a 50% discount from the applicable interstate rate.

CLEC - ILEC Traffic
(Non-Hierarchical to Hierarchical)

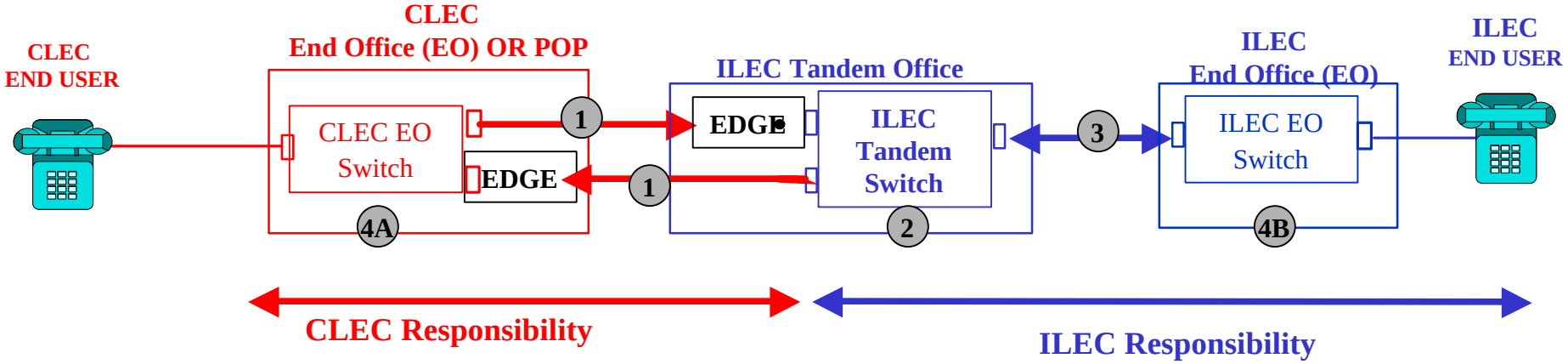

	NETWORK FUNCTION	Originating from CLEC: PAID BY	Originating from CLEC: PAID TO	Originating from ILEC: PAID BY	Originating from ILEC: PAID TO
1	Interconnection Transport (Note 1)	CLEC	Interconnection Transport Provider	CLEC	Interconnection Transport Provider
2	Tandem Switching	ILEC	Bill and Keep	ILEC	Bill and Keep
3	Common Transport	ILEC	Bill and Keep	ILEC	Bill and Keep
4	End Office Switching and Loop A	CLEC	Bill and Keep	ILEC (Step 4-6) CLEC (Step 7)	CLEC Bill and Keep
	B	CLEC (Step 4-6) ILEC (Step 7)	ILEC Bill and Keep	ILEC	Bill and Keep

Note 1: Interconnection Transport may be self-provisioned by the Non-Hierarchical Network, provisioned by a third party, or leased by the Non-Hierarchical Network from the Hierarchical Network at a 50% discount from the applicable interstate rate.

CMRS Carrier - ILEC Traffic
(Non-Hierarchical to Hierarchical)

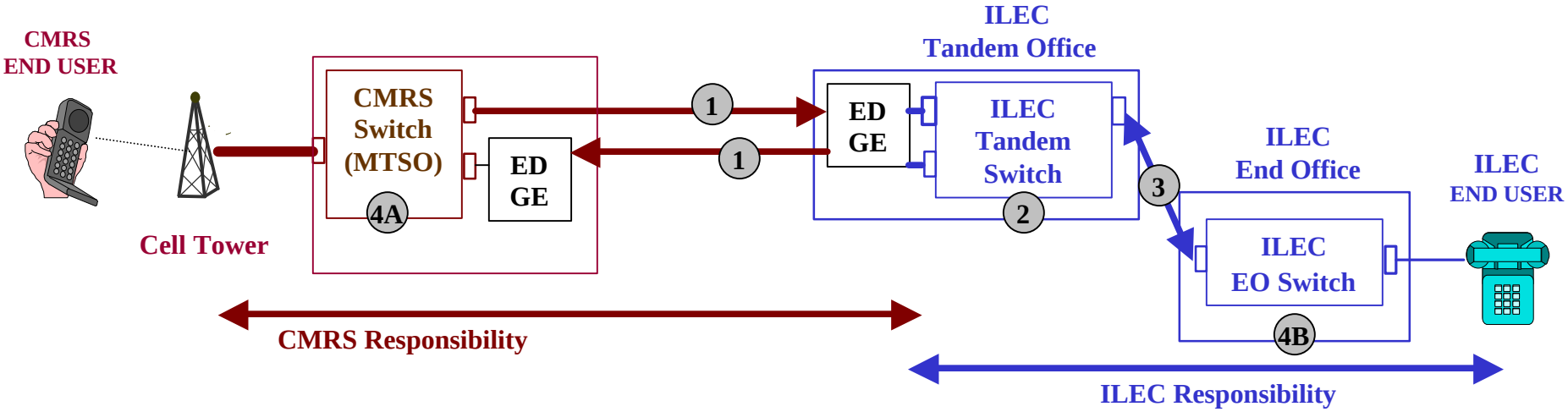

	NETWORK FUNCTION	PAID BY (Originating from CMRS)	PAID TO (Originating from CMRS)	PAID BY (Originating from ILEC)	PAID TO (Originating from ILEC)
1	Interconnection Transport (Note 1)	CMRS	Interconnection Transport Provider	CMRS	Interconnection Transport Provider
2	Tandem Switching	ILEC	Bill and Keep	ILEC	Bill and Keep
3	Common Transport	ILEC	Bill and Keep	ILEC	Bill and Keep
4	Switching and Loop A	CMRS	Bill and Keep	ILEC (Step 4-6) CMRS (Step 7)	CMRS Bill and Keep
	B	CMRS (Step 4-6) ILEC (Step 7)	ILEC Bill and Keep	ILEC	Bill and Keep

Note 1: Interconnection Transport may be self-provisioned by the Non-Hierarchical Network, provisioned by a third party, or leased by the Non-Hierarchical Network from the Hierarchical Network at a 50% discount from the applicable interstate rate.

ILEC - ILEC Traffic
(Hierarchical to Hierarchical)

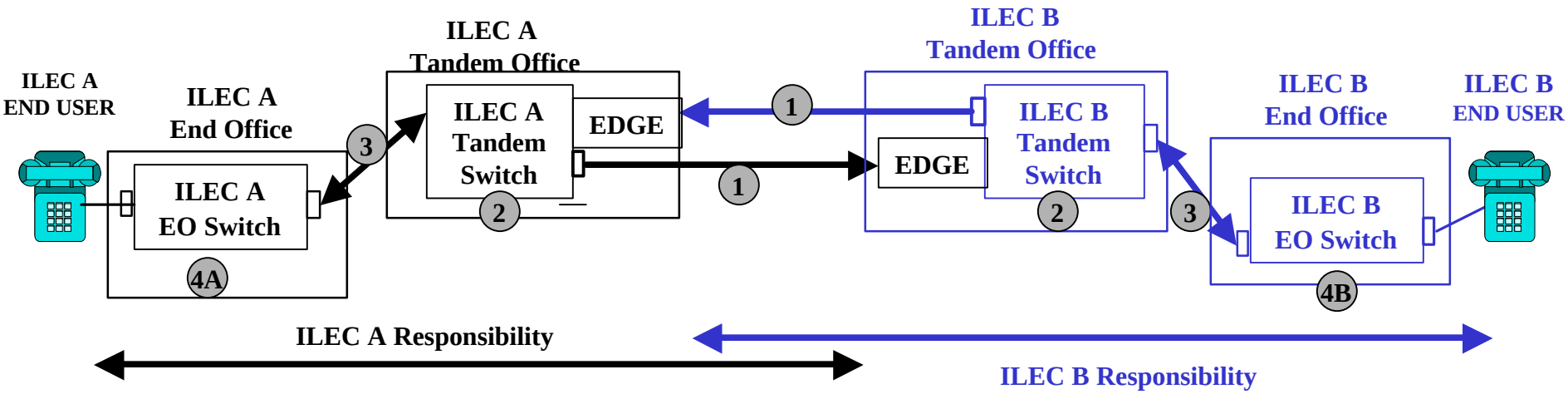

	NETWORK FUNCTION	Originating from ILEC A: PAID BY	Originating from ILEC A: PAID TO	Originating from ILEC B: PAID BY	Originating from ILEC B: PAID TO
1	Interconnection Transport	ILEC A	Interconnection Transport Provider	ILEC B	Interconnection Transport Provider
2	Tandem Switching	ILEC A	Bill and Keep	ILEC B	Bill and Keep
3	Common Transport	ILEC A	Bill and Keep	ILEC B	Bill and Keep
4	End Office Switching and Loop				
	A	ILEC A	Bill and Keep	ILEC B ILEC A	ILEC A Bill and Keep
	B	ILEC A ILEC B	ILEC B Bill and Keep	ILEC B	Bill and Keep

CLEC - CLEC Traffic w/ ILEC Transit
(Non-Hierarchical to Non-Hierarchical)

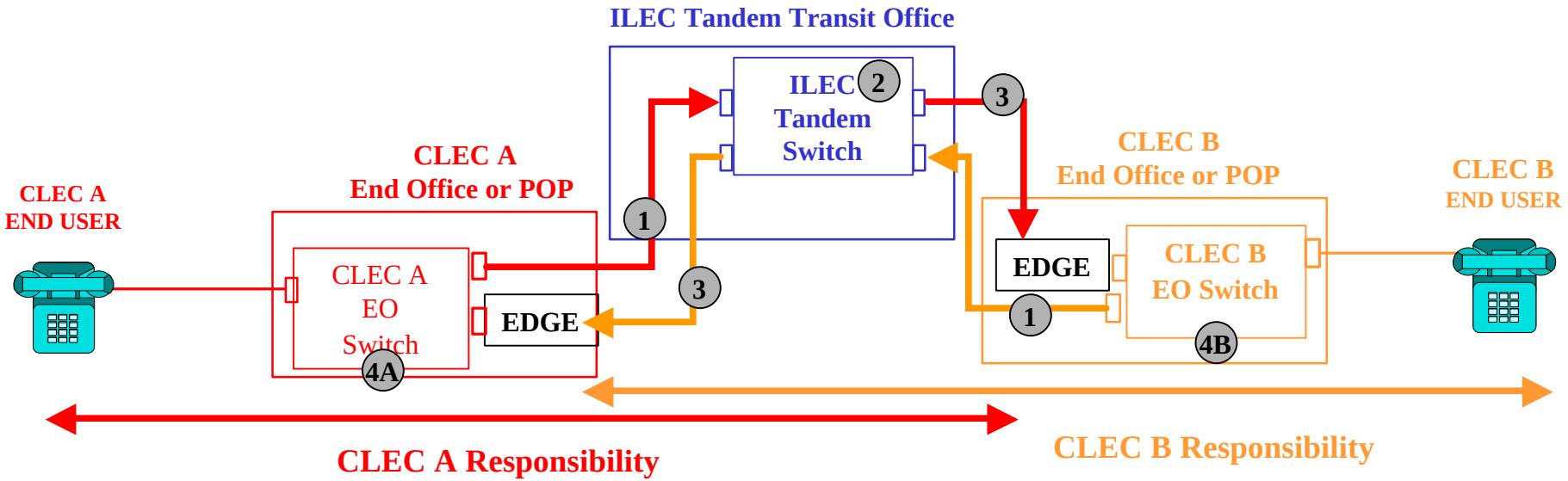

	NETWORK FUNCTION	PAID BY (Originating from CLEC A)	PAID TO (Originating from CLEC A)	PAID BY (Originating from CLEC B)	PAID TO (Originating from CLEC B)
1	Originating Transiting Transport (Note 1)	CLEC A	Transit Provider	CLEC B	Transit Provider
2	Tandem Switching	CLEC A	Transit Provider	CLEC B	Transit Provider
3	Terminating Transiting Transport (Note 2)	CLEC A	Transit Provider	CLEC B	Transit Provider
4	End Office Switching and Loop A	CLEC A	Bill and Keep	CLEC B (Step 4-6) CLEC A (Step 7)	CLEC A Bill and Keep
	B	CLEC A (Step 4-6) CLEC B (Step 7)	CLEC B Bill and Keep	CLEC B	Bill and Keep

Note 1: Originating Transiting Transport may be self-provisioned by the Non-hierarchical Network, provisioned by a third party, or leased by the Non-hierarchical Network from the Hierarchical Network at the applicable interstate rate.

Note 2: Tandem Transit provider may elect to use the facilities of the receiving carrier and credit/reimburse the receiving carrier.

CLEC - IXC Traffic w/ ILEC Transit

(Non-Hierarchical to Non-Hierarchical)

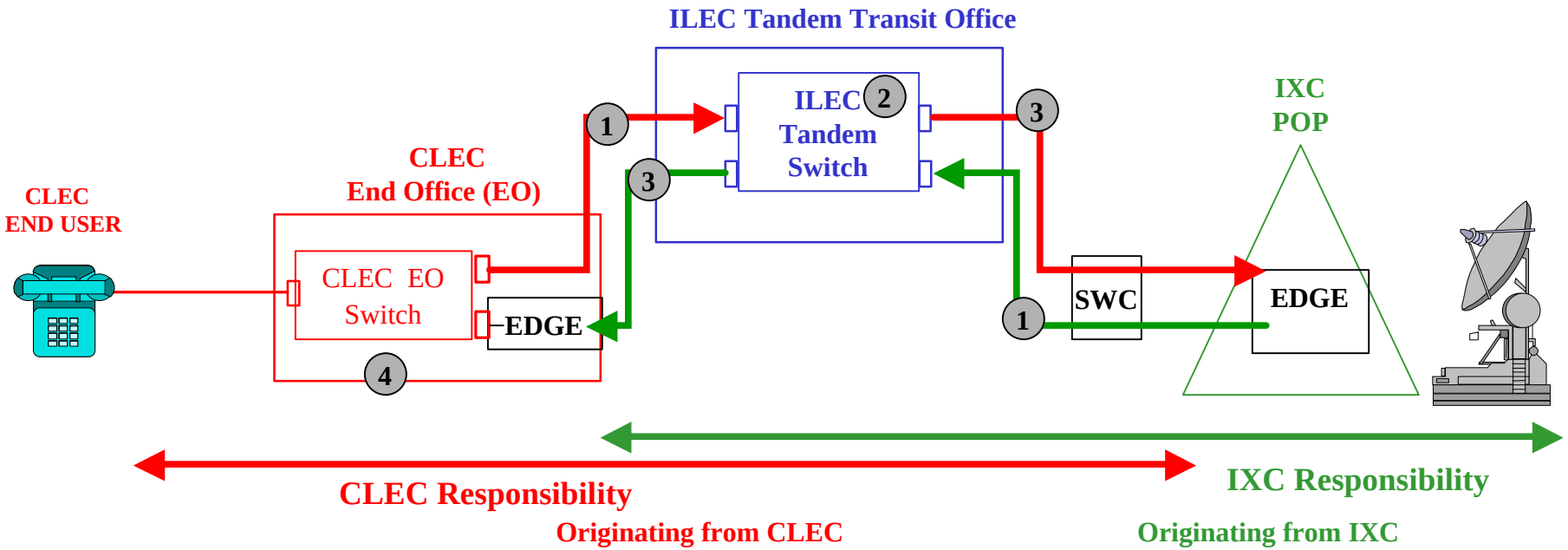

	NETWORK FUNCTION	PAID BY	PAID TO	PAID BY	PAID TO
1	Originating Transiting Transport (Note 1)	CLEC	Transit Provider	IXC	Transit Provider
2	Tandem Switching	CLEC	Transit Provider	IXC	Transit Provider
3	Terminating Transiting Transport (Note 2)	CLEC	Transit Provider	IXC	Transit Provider
4	End Office Switching and Loop	CLEC	Bill and Keep	IXC (Steps 4-6) CLEC (Step 7)	CLEC Bill and Keep

Note 1: Originating Transiting Transport may be self-provisioned by the Non-hierarchical Network, provisioned by a third party, or leased by the Non-hierarchical Network from the Hierarchical Network at the applicable interstate rate.

Note 2: Tandem transit provider may elect to use the facilities of the receiving carrier and credit/reimburse the receiving carrier.

CRTC - ILEC Traffic
(CRTC to Hierarchical)

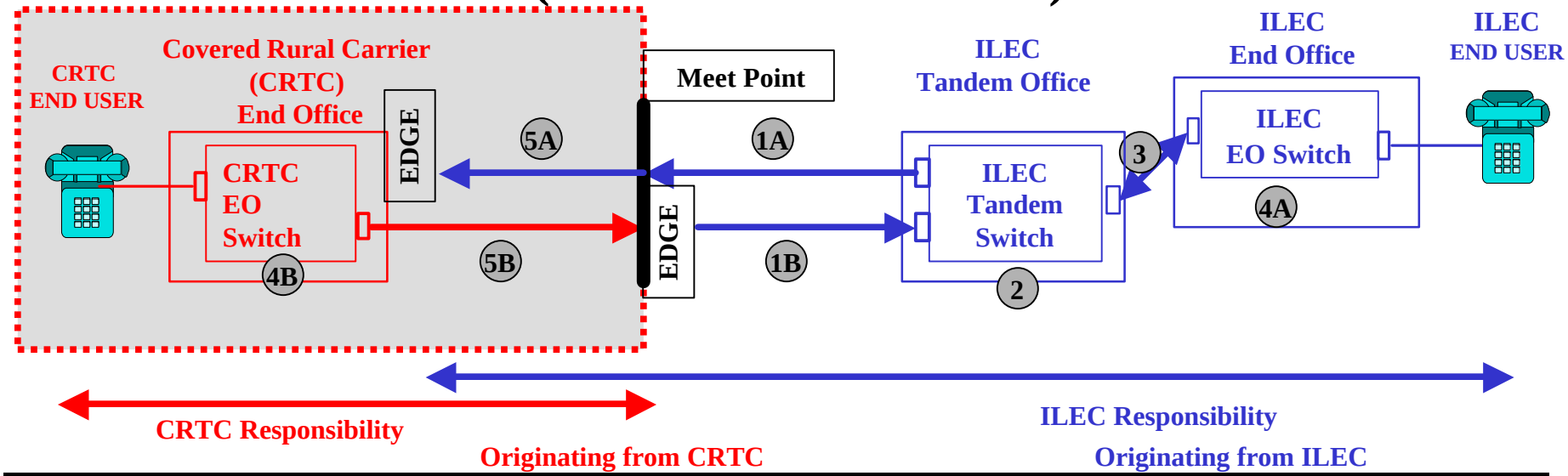

Originating from CRTC

Originating from ILEC

	NETWORK FUNCTION	PAID BY	PAID TO	PAID BY	PAID TO
1	Network Transport A	N/A	N/A	ILEC	Bill and Keep
	B	ILEC	Bill and Keep	N/A	N/A
2	Tandem Switching	ILEC	Bill and Keep	ILEC	Bill and Keep
3	Common Transport	ILEC	Bill and Keep	ILEC	Bill and Keep
4	End Office Switching and Loop A	CRTC (Steps 4-6) ILEC (Step 7)	ILEC Bill and Keep	ILEC	Bill and Keep
	B	CRTC	Bill and Keep	ILEC (Steps 4-6) CRTC (Step 7)	CRTC Bill and Keep
5	CRTC Transport A	N/A	N/A	ILEC	CRTC (note 2) (note 3)
	B	CRTC	Bill and Keep	N/A	N/A

Note 2: In the alternative to purchasing common terminating transport to this Edge from the CRTC, the ILEC also may purchase dedicated terminating transport from the CRTC at prescribed rates, e.g., DS-1's or DS-3's, purchase third-party transport, or deliver traffic using its own facilties.

Note 3: The Plan calls for the CRTC to bill a terminating transport rate to the originating network. The transit provider will provide the CRTC with billing records to allow the CRTC to bill the originating network. The terms and conditions under which these records will be provided are the subject of continuing discussion.

CRTC - CLEC Traffic w/ ILEC Transit
(CRTC to Non-Hierarchical)

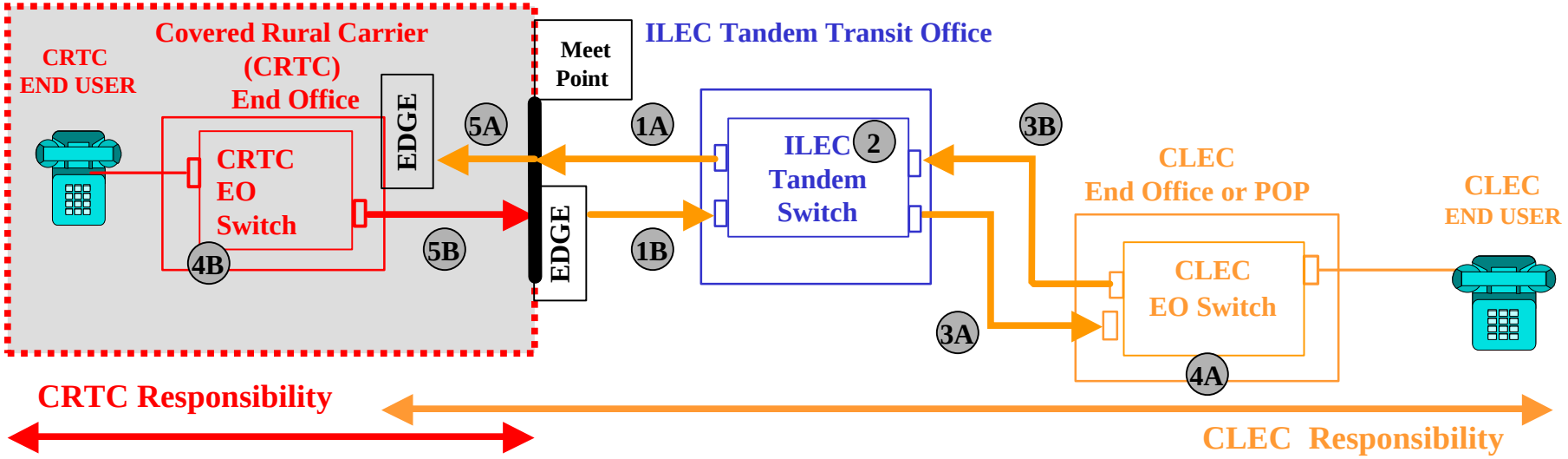

	NETWORK FUNCTION	Originating from CRTC: PAID BY	Originating from CRTC: PAID TO	Originating from CLEC: PAID BY	Originating from CLEC: PAID TO
1	Network Transport				
	A	N/A	N/A	CLEC	Transit Provider
	B	CLEC	Transit Provider	N/A	N/A
2	Tandem Switching	CLEC	Transit Provider	CLEC	Transit Provider
3	Common Transport				
	A	CLEC	Transit Provider	N/A	N/A
	B	N/A	N/A	CLEC	Transit Provider (Note 1)
4	End Office Switching and Loop				
	A	CRTC (Steps 4-6) CLEC (Step 7)	CLEC Bill and Keep	CLEC	Bill and Keep
	B	CRTC	Bill and Keep	CLEC (Steps 4-6) CRTC (Step 7)	CRTC Bill and Keep
5	CRTC Transport				
	A	N/A	N/A	CLEC	CRTC (Note 2)(Note 3)
	B	CRTC	Bill and Keep	N/A	N/A

Note 1: Originating Transiting Transport may be self-provisioned by the Non-Hierarchical Network, provisioned by a third party or leased by the Non-Hierarchical Network from the Hierarchical Network at the applicable interstate rate.

Note 2: In the alternative to purchasing common terminating transport to this Edge from the CRTC, the CLEC also may purchase dedicated terminating transport from the CRTC at prescribed rates, e.g., DS-1's or DS-3's, purchase third-party transport, or deliver traffic using its own facilities.

Note 3: The Plan calls for the CRTC to bill a terminating transport rate to the originating network. The transit provider will provide the CRTC with billing records to allow the CRTC to bill the originating network. The terms and conditions under which the billing records will be provided are the subject of ongoing discussions.

CRTC - CRTC w/ ILEC Transit

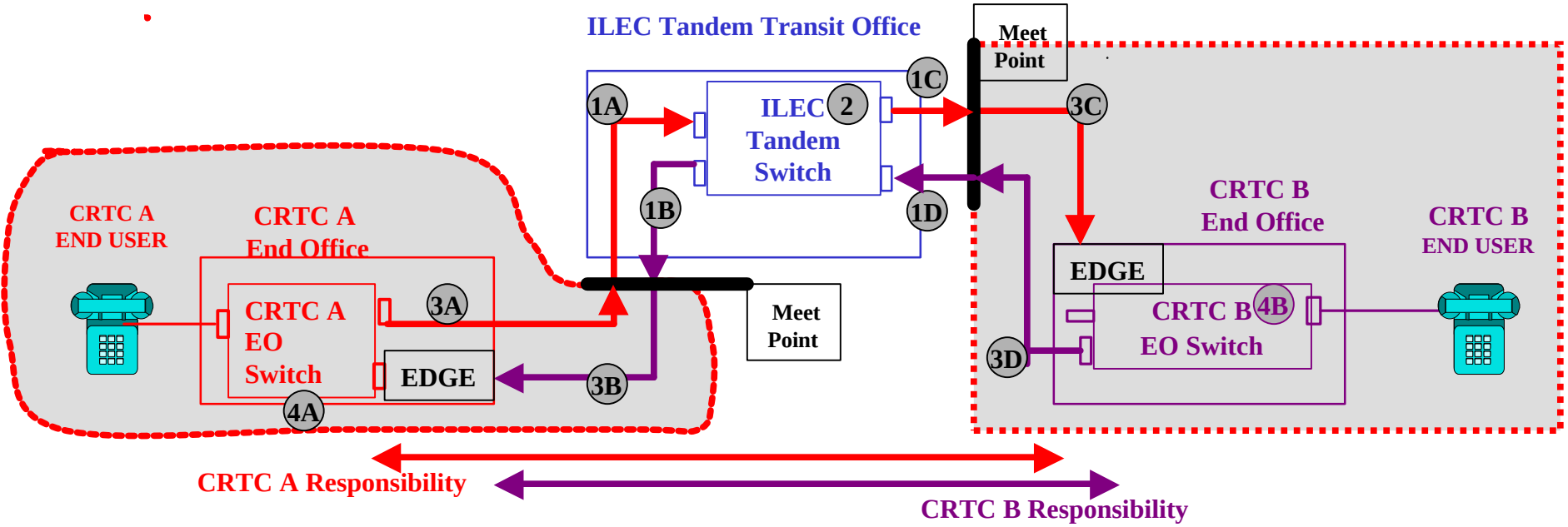

	NETWORK FUNCTION	Originating from CRTC A: PAID BY	Originating from CRTC A: PAID TO	Originating from CRTC B: PAID BY	Originating from CRTC B: PAID TO
1	Transiting Transport				
	A	CRTC A	Transit Provider (Note 1)	N/A	N/A
	B	N/A	N/A	CRTC B	Transit Provider
	C	CRTC A	Transit Provider	N/A	N/A
	D	N/A	N/A	CRTC B	Transit Provider (Note 1)
2	Tandem Switching	CRTC A	Transit Provider	CRTC B	Transit Provider
3	CRTC Transport				
	A	CRTC A	Bill and Keep	N/A	N/A
	B	N/A	N/A	CRTC B	CRTC A (Note 2) (Note 3)
	C	CRTC A	CRTC B (Note 2) (Note 3)	N/A	N/A
	D	N/A	N/A	CRTC B	Bill and Keep
4	End Office Switching and Loop				
	A	CRTC A	Bill and Keep	CRTC B (Steps 4-6) CRTC A (Step 7)	CRTC A Bill and Keep
	B	CRTC A (Steps 4-6) CRTC B (Step 7)	CRTC B Bill and Keep	CRTC B	Bill and Keep

Note 1: Originating Transiting Transport may be self-provisioned by the Non-Hierarchical Network, provisioned by a third party or leased by the Non-Hierarchical Network from the Hierarchical Network at the applicable interstate rate.

Note 2: In the alternative to purchasing terminating common transport to this Edge from the recipient CRTC, the oriinating CRTC may purchase terminating dedicated transport from the terminating CRTC at prescribed rates, e.g., DS-1's or DS-3's, purchase third-party transport, or deliver traffic using its own facilties.

Note 3: The Plan calls for the CRTC to bill a terminating transport rate to the originating network. The transit provider will provide the CRTC with billing records to allow the CRTC to bill the originating network. The terms and conditions under which these records will be provided are the subject of continuing discussions.

CMRS Carrier - CRTC w/ ILEC Transit

(Non-Hierarchical to CRTC)

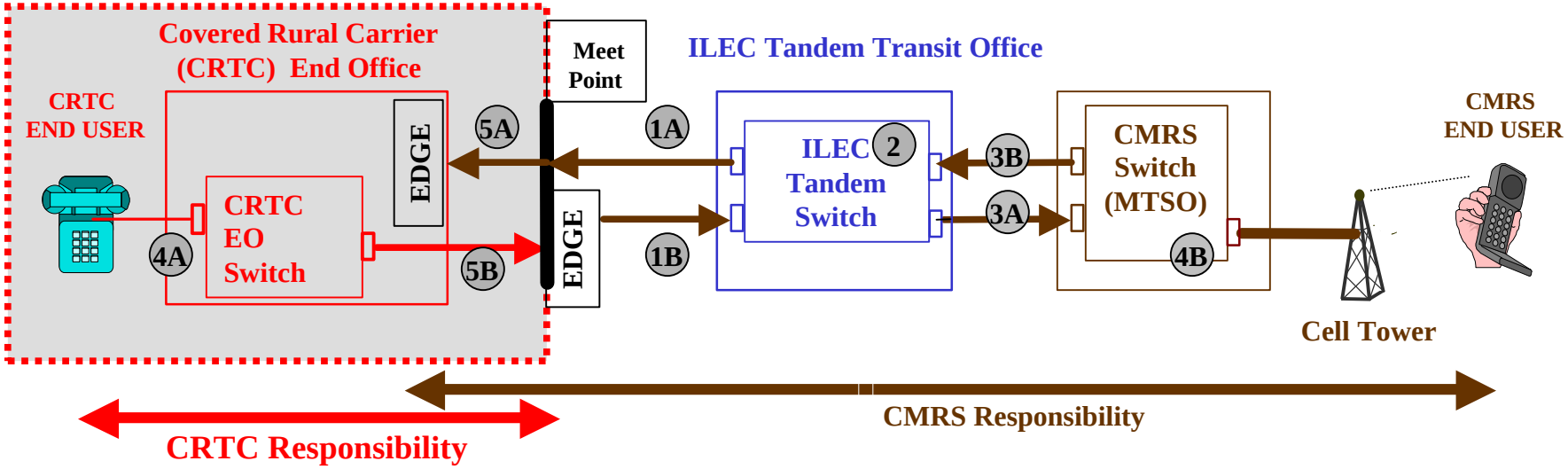

	NETWORK FUNCTION	Originating from CRTC: PAID BY	Originating from CRTC: PAID TO	Originating from CMRS: PAID BY	Originating from CMRS: PAID TO
1	Network Transport				
	A	N/A	N/A	CMRS	Transit Provider
	B	CMRS	Transit Provider	N/A	N/A
2	Tandem Switching	CMRS	Transit Provider	CMRS	Transit Provider
3	Common Transport				
	A	CMRS	Transit Provider	N/A	N/A
	B	N/A	N/A	CMRS	Transit Provider (Note 1)
4	End Office Switching and Loop				
	A	CRTC	Bill and Keep	CMRS (Steps 4-6) CRTC (Step 7)	CRTC Bill and Keep
	B	CRTC (Steps 4-6) CMRS (Step 7)	CMRS Bill and Keep	CRTC B	Bill and Keep
5	CRTC Transport				
	A	N/A	N/A	CMRS	CRTC (Note 2) (Note 3)
	B	CRTC	Bill and Keep	N/A	N/A

Note 1: Originating Transiting Transport may be self-provisioned by the Non-Hierarchical Network, provisioned by a third party or leased by the Non-Hierarchical Network from the Hierarchical Network at the applicable interstate rate.

Note 2: In the alternative to purchasing common terminating transport to this Edge from the CRTC, the CMRS Provider also may purchase dedicated terminating transport from the CRTC at prescribed rates, e.g., DS-1's or DS-3's, purchase third-party transport, or deliver traffic using its own facilities.

Note 3: The Plan calls for the CRTC to bill a terminating transport rate to the originating network. The transit provider will provide the CRTC with billing records to allow the CRTC to bill the originating network. The terms and conditions under which the transit provider will provide the CRTC with such records are to be determined.

CLEC to CRTC

Where the CLEC is in CRTC Territory

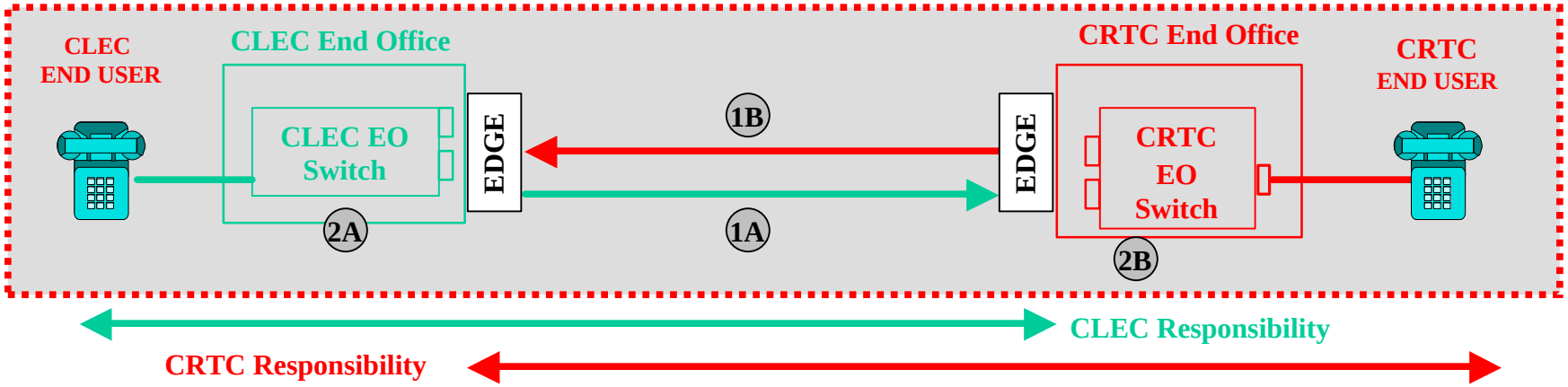

		Originating from CLEC		Originating from CRTC	
	NETWORK FUNCTION	PAID BY	PAID TO	PAID BY	PAID TO
1	Interconnection Transport A	CLEC	Bill and Keep	N/A	N/A
	B	N/A	N/A	CRTC	Bill and Keep
2	End Office Switching and Loop A	CLEC	Bill and Keep	CRTC (Steps 4-6) CLEC (Step 7)	CLEC Bill and Keep
	B	CLEC (Steps 4-6) CRTC (Step 7)	CRTC Bill and Keep	CRTC	Bill and Keep

Summary of Key Events in the ICF Plan

Step	Year beginning July 1:	Network Interconnection	SLC Transition		Pricing Flexibility for Price Cap Carriers	Intercarrier Payments				Universal Service
			Large Carriers	CRTCs		Large Carriers		CRTCs		
						Access Charges	Non-Access	Access Charges	Non-Access	
1	2005	No Change	SLC caps rise in a 4-step transition subject to three constraints: (1) Neither the $6.50 residential SLC cap nor the average residential SLC rate can increase by more than $0.75/month in steps 1 and 2, or by more than $1.00 in Steps 3 and 4. (2) No individual residential SLC rate can increase by more than $0.95/month in Steps 1 and 2, or by more than $1.20/month in Steps 3 and 4. (3) Other SLC caps (non-primary residential and MLB) increase only to the extent they would otherwise be below the residential SLC cap.	Between Step 1 and Step 5, residential SLC caps increase from $6.50 to $9.00 in $0.50 annual increments. In Steps 1-3, other SLC caps increase only to the extent that they would otherwise be below the residential SLC cap.	Step 1 SLC pricing flexibility (subject to revenue limits, constraints to prevent shifting recovery from business to residential users, and safeguards to prevent any effect on USF).	Four equal step plan transitions all interstate and intrastate access charges to SLCs, new universal service support, and a single, uniform rate of $0.000175 per terminating minute.	At step 1, non-access compensation rates unified at $0.0003525 per minute. Between Step 1 and Step 4, a four-step plan transitions all non-access compensation to SLCs, new universal service support, and a single, uniform rate of $0.000175 per terminating minute.	Four equal step plan transitions all interstate and intrastate access charges to SLCs, new universal service support, and a single, uniform rate of $0.000175 per terminating minute.	$0.0125 per minute default recip comp rate established for CRTC-CMRS traffic. Other non-access compensation rates unified at $0.0003525 per minute. Four-step plan transitions all non-access compensation to SLCs, new universal service support, and a single, uniform rate of $0.000175 per terminating minute.	**<u>All at Step 1:</u>** New support mechanisms (ICRM and TNRM) provide support for intercarrier compensation amounts otherwise not recoverable. Maintain rate-of-return principles for rate-of-return carriers. Cap removed from rural high cost loop support mechamism. Changes to Safety Valve Mechanism take effect. Certain rural price cap carriers gain option to elect support from non-rural mechanism. Telephone number and capacity-based unit contribution methodology replaces current interstate revenue-based system.
2	2006									
3	2007	New "Edge" rules take effect. New rates for edge-to-edge interconnection transport, transiting, and optional CRTC terminating transport take effect.						At Step 3, CRTC option to take terminating transport rates to an average of $0.0095 per terminating minute for interconnecting carriers electing to use such transport to reach CRTC network edges.		
4	2008			At Step 4, the MLB SLC cap increase to $10.00.	Additional Step 4 SLC pricing flexibility (subject to safeguards that prevent any effect on USF), including removing end user charges from price caps.	Uniform termination rate of $0.000175 per terminating minute. (Terminating transport rates for CRTCs preserved).				
5	2009		All SLC caps uniform at $10.00 (USF calculated accordingly); inflation indexing takes effect			No Change				
6	2010			(Optional) Residential SLC caps increase to $9.50		Termination rate reduced by 50% to $0.0000875/terminating minute. (Terminating transport rates for CRTCs preserved).				
7	2011			(Optional) Residential SLC cap increases to $10.00		Termination rate reduced to zero. (Terminating transport rates for CRTCs preserved).				
8	2012			No Change		Termination rate remains at zero. (Terminating transport rates for CRTCs preserved).				

LATHAM & WATKINS LLP

Intercarrier Compensation Forum

Intercarrier Compensation and
Universal Service Reform Plan

August 20, 2004

The System is Broken

- Today's rules limit consumer choices and place rural and low-income consumers at risk.
- Today's rules encourage arbitrage and create inefficiency by applying radically different compensation schemes to largely the same functions and services, even when provided by the same carrier.
- Today's rules create uncertainty and instability that harms carrier efforts to make business plans and attract investment to maintain networks and develop new services.
- Today's rules fail to support universal service in a sustainable manner.

Consumers Are Being Harmed

- Consumers do not receive the service packages they want.
- Consumers prefer bundles – flat-rated, any distance packages with vertical features, like they receive from wireless or VOIP providers.
- Rural consumers are harmed by expensive intrastate calls, small local calling areas and high long distance bills.
- Consumers pay inflated, averaged toll rates that include implicit universal service support.
- Low income consumers in particular are at risk of losing service if they cannot afford the resulting high toll bills

Industry is Under Siege

- The current system encourages uneconomic arbitrage by applying radically different compensation schemes to functionally equivalent network uses.
- It creates uncertainty and instability that harm carriers' efforts to make business plans and develop new services.
- It threatens carrier revenues and service reliability and, ultimately, national security.
- It encourages wasteful litigation over archaic rules.
- It threatens universal service by encouraging use of services which are fully or partially exempt from universal service contributions.
- It favors technologies that are able to arbitrarily avoid the current system, regardless of whether those technologies offer better quality or greater efficiencies.

Intercarrier Compensation Rates

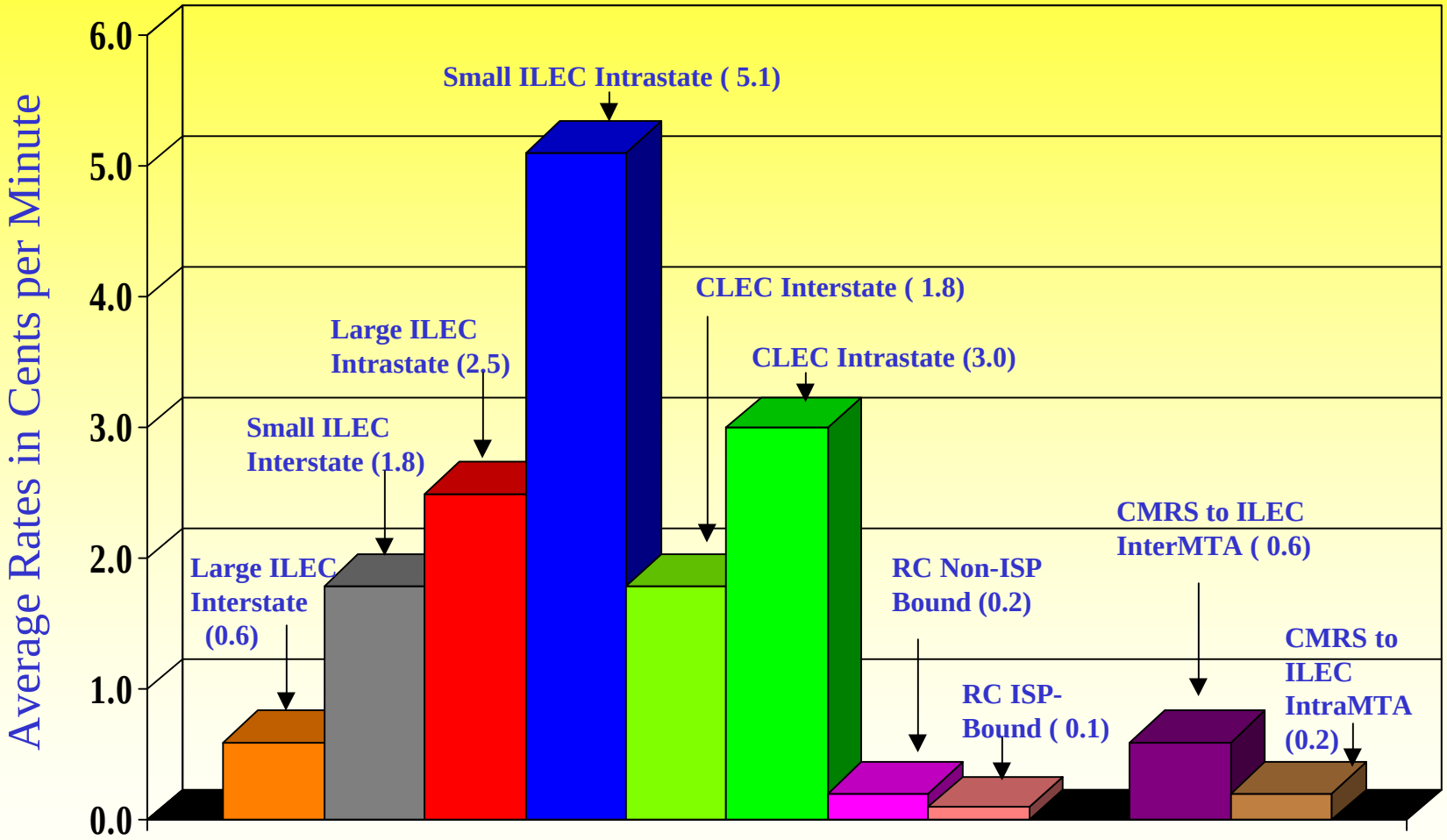

High (¢/min):	1.5	8.9	9.9	34.9	6.8	35.9	0.3	0.1	8.9	0.3
Low (¢/min):	0.5	0.3	0.4	0.7	0.2	0.4	0.0	0.0	0.2	0.0

Goals

The Intercarrier Compensation and Universal Service Reform plan is designed to further the following public policy goals:

- ✓ Preserve and enhance universal telephone service in all parts of the U.S.;
- ✓ Facilitate carrier efforts to innovate and offer new services and packages to consumers;
- ✓ Minimize or eliminate arbitrage opportunities created by existing regulations in order to encourage timely deployment of new network technologies and capabilities;
- ✓ Minimize the cost of regulation by eliminating intercarrier disputes over interconnection and compensation arrangements; and
- ✓ Allow consumers and carriers to adjust expectations and business plans by implementing new intercarrier compensation and universal service structures over a reasonable transition period.

The ICF Process

- The Industry Group Has Been Meeting for Over A Year in an Effort to Craft a Comprehensive Solution That Strikes the Right Balance Among Diverse Interests and Provides a Stable and Sensible Transition Plan
- A Single Industry Segment Plan Would have Been Quicker and Easier to Develop than the Consensus ICF Plan, But Would Have Less Credibility

- **Virtually Every Industry Segment Has Been Represented**
  - Local, Long Distance, Rural, Wireless, Competitive, and Internet Providers Have Participated and Have Had Significant Input
  - For Various Reasons, Some Companies Have Dropped Out and Others Have Joined or Rejoined; Input From All Segments Has Been Retained and is Reflected in the Plan

The Result

- A Balanced Plan Which is Pro Urban and Rural Consumer and Does Not Favor Any Industry Segment.
- Replaces Confusing and Obsolete Systems of Intercarrier Charges With a New, Comprehensive and Unified System.
- Will Eliminate On A Going Forward Basis Many of the Compensation and Interconnection Disputes That Exist Today.

Key Features of the Plan

- The Plan begins to restructure rates on July 1, 2005 to bring immediate relief from today's broken system.
- The Plan achieves a unified system within three years.
- The Plan includes interim FCC checkpoints.
- The ICF Plan is Not an Outline or a Theory; It is a Comprehensive Solution

Key Features of the Plan

- The Plan has three primary components:
  - Network Interconnection
    - The Plan contains clear and explicit network rules regarding the technical and financial obligations for the efficient interconnection of diverse carrier networks.
    - New rules take effect on July 1, 2007, giving carriers sufficient time to implement.
    - Network rules provide a framework for voluntary carrier negotiations.
  - Rate Restructuring
    - Staged transition achieves a uniform system of intercarrier compensation on July 1, 2008, with a single termination rate for all traffic.
    - This termination rate remains unchanged for two years and then transitions to zero by July 1, 2011.
    - Plan includes protections for rural America, including a continuing optional transport revenue stream for rural carriers.
  - Universal Service
    - New explicit support replaces implicit support in intercarrier compensation.
    - Stabilizes and broadens the universal service funding base.
    - Plan contains modifications that enhance incentives for rural investment.

Network Interconnection in the ICF Plan

- Network interconnection rules take effect July 1, 2007, concurrent with the new transport rate structure.
- The ICF Plan classifies carrier networks into one of three categories, and specifies rules for interconnection.
  - A Hierarchical Network has commonly-owned access tandems and subtending end offices.
  - A Rural Network is operated by a Covered Rural Telephone Company (CRTC), defined as a carrier that, on July 1, 2005:
    - Is a Rural Telephone Company under the Communications Act, is not a Bell Operating Company or affiliate, and serves fewer than 1,000,000 access lines in its study area; or
    - Is a Two Percent Carrier under the Communications Act with a holding company average of fewer than 19 Switched Access End User Common Line charge lines per square mile served.
  - A Non-Hierarchical Network is neither hierarchical nor rural.

Network Edges

- In general, a network Edge under the ICF Plan is the point where carriers interconnect for the delivery of terminating traffic.
- Network Edges:
  - Must be able to accept all kinds of PSTN traffic.
  - Must be access tandems, end offices, wireless MSCs, POPs, or media gateways.
  - Must allow other carriers to interconnect using multiple methods.
  - Are subject to numerical and locational requirements.

Overview of Rate Restructuring

- Starting July 1, 2005, all intercarrier compensation transitions in four annual steps over three years to a uniform system of intercarrier compensation with a single termination rate of $0.000175/min for all traffic.
- Beginning July 1, 2007 (with no sunset), carriers receive intercarrier payments from:
  - Transiting services;
  - Interconnection transport; and
  - For CRTCs, terminating transport revenues for inbound traffic.
- Commencing July 1, 2010, the $0.000175/minute termination rate is reduced to zero in two equal steps.
- Rate-regulated carriers shift revenue from intercarrier charges into SLCs and new explicit universal service support.

SLC Transition Overview

Year beginning July 1:		2004 (current rules)	2005	2006	2007	2008	2009	2010	2011 and 2012
Step:		--	1	2	3	4	5	6	7 and 8
Large Carriers (*i.e.*, non CRTCs)	Maximum monthly Res/SLB SLC cap[1]	$6.50	$7.25	$8.00	$9.00 (subject to adjustment to accommodate transport "flip")	$10.00	$10.00 plus inflation	$10.00 plus inflation	$10.00 plus inflation
	Average overall SLC Increase [2 3]	--	$0.75	$0.75	$1.00 (subject to adjustment to accommodate transport "flip")	$1.00	--	--	--
	Maximum increase in any individual SLC [3]	--	$0.95	$0.95	$1.20 (subject to adjustment to accommodate transport "flip")	$1.20	--	--	--
CRTCs	Maximum monthly Res/SLB SLC cap	$6.50	$7.00	$7.50	$8.00	$8.50	$9.00	$9.00 or $9.50	$9.00 or $10.00
	Maximum monthly MLB SLC cap	$9.20	Equal to Res/SLB SLC cap, but not less than the MLB SLC cap calculated under 6/30/04 rules			$10.00	$10.00	$10.00	$10.00

[1] MLB and Non-Primary Residential SLC caps increase to the extent they are below these caps.
[2] The average is calculated on a study area basis.
[3] If the increase in a given year is less than the amount set forth in the table, the increase in the next year may be correspondingly greater.

New Support Mechanisms

- Two new uncapped support mechanisms:
  - Intercarrier Compensation Recovery Mechanism (ICRM), applicable to areas served by BOCs and other non-CRTC ILECs.
  - Transitional Network Recovery Mechanism (TNRM), applicable to areas served by CRTCs (price cap and non-price cap).
- Purpose is to provide explicit support for intercarrier compensation amounts otherwise not recoverable in order to maintain and preserve universal service.
- Primary differences between the two mechanisms:
  - Disaggregation options.
  - Extent of eligibility of CETCs to receive support.

Contribution Methodology

- Single contribution methodology used to collect funding for all existing and new universal service support mechanisms.
- “Unit-based” assessment of unique working telephone numbers and non-switched, high-speed, dedicated network connections.
- Carriers recover contribution amounts from end users that cause the assessments.

Summary of Key Events in the ICF Plan

Step	Year beginning July 1:	Network Interconnection	SLC Transition		Pricing Flexibility for Price Cap Carriers	Intercarrier Payments				Universal Service
			Large Carriers	CRTCs		Large Carriers		CRTCs		
						Access Charges	Non-Access	Access Charges	Non-Access	
1	2005	No Change	SLC caps rise in a 4-step transition subject to three constraints: (1) Neither the $6.50 residential SLC cap nor the average residential SLC rate can increase by more than $0.75/month in steps 1 and 2, or by more than $1.00 in Steps 3 and 4. (2) No individual residential SLC rate can increase by more than $0.95/month in Steps 1 and 2, or by more than $1.20/month in Steps 3 and 4. (3) Other SLC caps (non-primary residential and MLB) increase only to the extent they would otherwise be below the residential SLC cap.	Between Step 1 and Step 5, residential SLC caps increase from $6.50 to $9.00 in $0.50 annual increments. In Steps 1-3, other SLC caps increase only to the extent that they would otherwise be below the residential SLC cap.	Step 1 SLC pricing flexibility (subject to revenue limits, constraints to prevent shifting recovery from business to residential users, and safeguards to prevent any effect on USF).	Four equal step plan transitions all interstate and intrastate access charges to SLCs, new universal service support, and a single, uniform rate of $0.000175 per terminating minute.	At step 1, non-access compensation rates unified at $0.0003525 per minute. Between Step 1 and Step 4, a four-step plan transitions all non-access compensation to SLCs, new universal service support, and a single, uniform rate of $0.000175 per terminating minute.	Four equal step plan transitions all interstate and intrastate access charges to SLCs, new universal service support, and a single, uniform rate of $0.000175 per terminating minute.	$0.0125 per minute default recip comp rate established for CRTC-CMRS traffic. Other non-access compensation rates unified at $0.0003525 per minute. Four-step plan transitions all non-access compensation to SLCs, new universal service support, and a single, uniform rate of $0.000175 per terminating minute.	**All at Step 1:** New support mechanisms (ICRM and TNRM) provide support for intercarrier compensation amounts otherwise not recoverable. Maintain rate-of-return principles for rate-of-return carriers. Cap removed from rural high cost loop support mechanism. Changes to Safety Valve Mechanism take effect. Certain rural price cap carriers gain option to elect support from non-rural mechanism. Telephone number and capacity-based unit contribution methodology replaces current interstate revenue-based system.
2	2006									
3	2007	New "Edge" rules take effect. New rates for edge-to-edge interconnection transport, transiting, and optional CRTC terminating transport take effect.				At Step 3, CRTC option to take terminating transport rates to an average of $0.0095 per terminating minute for interconnecting carriers electing to use such transport to reach CRTC network edges.				
4	2008			At Step 4, the MLB SLC cap increase to $10.00.	Additional Step 4 SLC pricing flexibility (subject to safeguards that prevent any effect on USF), including removing end user charges from price caps.	Uniform termination rate of $0.000175 per terminating minute. (Terminating transport rates for CRTCs preserved).				
5	2009		All SLC caps uniform at $10.00 (USF calculated accordingly); inflation indexing takes effect			No Change				
6	2010			(Optional) Residential SLC caps increase to $9.50		Termination rate reduced by 50% to $0.0000875/terminating minute. (Terminating transport rates for CRTCs preserved).				
7	2011			(Optional) Residential SLC cap increases to $10.00		Termination rate reduced to zero. (Terminating transport rates for CRTCs preserved).				
8	2012			No Change		Termination rate remains at zero. (Terminating transport rates for CRTCs preserved).				