Specification of the Bluetooth System

Wireless connections made easy

Master Table of Contents & Compliance Requirements

Covered Core Package version: 1.2
Current Master TOC issued:
05 November 2003

Bluetooth®

Revision History

The Revision History is shown in the “Appendix” on page 53[vol. 0].

Contributors

The persons who contributed to this specification are listed in “Appendix” on page 53[vol. 0].

Web Site

This specification can also be found on the Bluetooth website:
http://www.bluetooth.com

Disclaimer and Copyright Notice

The copyright in these specifications is owned by the Promoter Members of Bluetooth SIG, Inc. (“Bluetooth SIG”). Use of these specifications and any related intellectual property (collectively, the “Specification”), is governed by the Promoters Membership Agreement among the Promoter Members and Bluetooth SIG (the “Promoters Agreement”), certain membership agreements between Bluetooth SIG and its Adopter and Associate Members (the “Membership Agreements”) and the Bluetooth Specification Early Adopters Agreements (“1.2 Early Adopters Agreements”) among Early Adopter members of the unincorporated Bluetooth special interest group and the Promoter Members (the “Early Adopters Agreement”). Certain rights and obligations of the Promoter Members under the Early Adopters Agreements have been assigned to Bluetooth SIG by the Promoter Members.

Use of the Specification by anyone who is not a member of Bluetooth SIG or a party to an Early Adopters Agreement (each such person or party, a “Member”), is prohibited. The legal rights and obligations of each Member are governed by their applicable Membership Agreement, Early Adopters Agreement or Promoters Agreement. No license, express or implied, by estoppel or otherwise, to any intellectual property rights are granted herein.

Any use of the Specification not in compliance with the terms of the applicable Membership Agreement, Early Adopters Agreement or Promoters Agreement is prohibited and any such prohibited use may result in termination of the applicable Membership Agreement or Early Adopters Agreement and other liability permitted by the applicable agreement or by applicable law to Bluetooth SIG or any of its members for patent, copyright and/or trademark infringement.

THE SPECIFICATION IS PROVIDED “AS IS” WITH NO WARRANTIES WHATSOEVER, INCLUDING ANY WARRANTY OF MERCHANTABILITY, NONINFRINGEMENT, FITNESS FOR ANY PARTICULAR PURPOSE, SATISFACTORY QUALITY, OR REASONABLE SKILL OR CARE, OR ANY WARRANTY ARISING OUT OF ANY COURSE OF DEALING, USAGE, TRADE PRACTICE, PROPOSAL, SPECIFICATION OR SAMPLE.

Each Member hereby acknowledges that products equipped with the Bluetooth® technology (“Bluetooth® Products”) may be subject to various regulatory controls under the laws and regulations of various governments worldwide. Such laws and regulatory controls may govern, among other things, the combination, operation, use, implementation and distribution of Bluetooth® Products. Examples of such laws and regulatory controls include, but are not limited to, airline regulatory controls, telecommunications regulations, technology transfer controls and health and safety regulations. Each Member is solely responsible for the compliance by their Bluetooth® Products with any such laws and regulations and for obtaining any and all required authorizations, permits, or licenses for their Bluetooth® Products related to such regulations within the applicable jurisdictions. Each Member acknowledges that nothing in the Specification provides any information or assistance in connection with securing such compliance, authorizations or licenses. NOTHING IN THE SPECIFICATION CREATES ANY WARRANTIES, EITHER EXPRESS OR IMPLIED, REGARDING SUCH LAWS OR REGULATIONS.

ALL LIABILITY, INCLUDING LIABILITY FOR INFRINGEMENT OF ANY INTELLECTUAL PROPERTY RIGHTS OR FOR NONCOMPLIANCE WITH LAWS, RELATING TO USE OF THE SPECIFICATION IS EXPRESSLY DISCLAIMED. BY USE OF THE SPECIFICATION, EACH MEMBER EXPRESSLY WAIVES ANY CLAIM AGAINST BLUETOOTH SIG AND ITS PROMOTER MEMBERS RELATED TO USE OF THE SPECIFICATION.

Bluetooth SIG reserves the right to adopt any changes or alterations to the Specification as it deems necessary or appropriate and to adopt a process for adding new Bluetooth® profiles after the release of the Specification.

Copyright © 1999, 2000, 2001, 2002, 2003

Agere Systems, Inc.,
Ericsson Technology Licensing, AB,
IBM Corporation,
Intel Corporation,
Microsoft Corporation,
Motorola, Inc.,
Nokia Corporation,
Toshiba Corporation

*Third-party brands and names are the property of their respective owners.

MASTER TABLE OF CONTENTS

Bluetooth Specification
Including Core v1.2

This table of contents (TOC) covers the entire Bluetooth Specification.
In addition, each volume has a TOC and each part of a volume is preceded by a detailed TOC.

MASTER TOC FOR THE BLUETOOTH SPECIFICATION

In the following table:

- The TOC for each Volume starts at the top of a page.
- The Volume No. is written in red and followed by the name of the Volume.

Note: Each Volume is a self contained book which is published and updated separately and is equipped with a TOC of its own. However, this Master TOC is also revised as soon as any of the other Volumes are updated.

- A Volume cover one or more Parts (A, B, etc.), each Part can be viewed independently and has its own TOC.

Red or blue text on the following pages indicates hypertext links that will take you directly to the indicated section, on condition that you have access to a complete specification.

Specification Volume 0

Master Table of Contents & Compliance Requirements

Part A
MASTER TABLE OF CONTENTS

Master TOC for the Bluetooth Specification 7

Part B
BLUETOOTH COMPLIANCE REQUIREMENTS

Contents 43
1 Scope 45
2 Definitions.....47
3 Legal Aspects 49
4 Introduction to the Bluetooth Qualification Program 51

Part C
APPENDIX

Contents **55**

1 Revision History **57**
1.1 [vol 0] Master TOC & Compliance Requirements 57
1.1.1 Bluetooth Compliance Requirements 57
1.2 [Vol 1] Architecture & Terminology Overview 57
1.3 [Vol 2 & 3] Core System Package 58

2 Contributors **59**
2.1 [vol 0] Master TOC & Compliance Requirements 59
2.1.1 Part B: Bluetooth Compliance Requirements 59
2.2 [vol 1] Architecture &Terminology Overview 59
2.2.1 Part A: Architectural Overview 59
2.2.2 Part B: Acronyms & Abbreviations 60
2.2.3 Part C: Changes from Bluetooth Specification v1.1 60
2.3 [Vol 2] Core System Package, Controller 61
2.3.1 Part A: Radio Specification 61
2.3.2 Part B: Baseband Specification 62
2.3.3 Part C: Link Manager Protocol 65
2.3.4 Part D: Error Codes 66
2.3.5 Part E: Bluetooth Host Controller Interface Functional Specification 67
2.3.6 Part F: Message Sequence Charts 68
2.3.7 Part G: Sample Data 69
2.3.8 Part H: Security Specification 69
2.4 [Vol 3] Core System Package, Host 70
2.4.1 Part A: Logical Link Control and Adaptation Protocol Specification 70
2.4.2 Part B: Service Discovery Protocol (SDP) 71
2.4.3 Part C Generic Access Profile 72
2.4.4 Part D: Test Support 72

Specification Volume 1
Architecture & Terminology Overview

Table of Contents 5

Part A
ARCHITECTURE

Contents 11

1 General Description 13
1.1 Overview of Operation 13
1.2 Nomenclature 15

2 Core System Architecture 19
2.1 Core Architectural Blocks 22
2.1.1 Channel manager 22
2.1.2 L2CAP resource manager 22
2.1.3 Device manager 23
2.1.4 Link manager 23
2.1.5 Baseband resource manager 23
2.1.6 Link controller 24
2.1.7 RF 24

3 Data Transport Architecture 25
3.1 Core Traffic Bearers 26
3.1.1 Framed data traffic 27
3.1.2 Unframed data traffic 28
3.1.3 Reliability of traffic bearers 28
3.2 Transport Architecture Entities 30
3.2.1 Bluetooth generic packet structure 30
3.3 Physical Channels 32
3.3.1 Basic piconet channel 33
3.3.2 Adapted piconet channel 34
3.3.3 Inquiry scan channel 35
3.3.4 Page scan channel 36
3.4 Physical Links 37
3.4.1 Links supported by the basic and adapted piconet physical channel 38
3.4.2 Links supported by the scanning physical channels 39

3.5 Logical Links and Logical Transports 39
3.5.1 Casting 41
3.5.2 Scheduling and acknowledgement scheme 41
3.5.3 Class of data 42
3.5.4 Asynchronous connection-oriented (ACL) 42
3.5.5 Synchronous connection-oriented (SCO) 43
3.5.6 Extended synchronous connection-oriented (eSCO) 44
3.5.7 Active slave broadcast (ASB) 44
3.5.8 Parked slave broadcast (PSB) 45
3.5.9 Logical links 46
3.5.10 ACL Control Logical Link (ACL-C) 47
3.5.11 User Asynchronous/Isochronous Logical Link (ACL-U) 47
3.5.12 User Synchronous/Extended Synchronous Logical Links (SCO-S/eSCO-S) 47
3.6 L2CAP Channels 48
4 Communication Topology 49
4.1 Piconet Topology 49
4.2 Operational Procedures and Modes 51
4.2.1 Inquiry (Discovering) Procedure 51
4.2.2 Paging (Connecting) Procedure 52
4.2.3 Connected mode 52
4.2.4 Hold mode 53
4.2.5 Sniff mode 53
4.2.6 Parked state 54
4.2.7 Role switch procedure 54

Part B
ACRONYMS & ABBREVIATIONS

1 List of Acronyms and Abbreviations.....57
2 Abbreviations of the Specification Names 65

Part C
CHANGES FROM BLUETOOTH SPECIFICATION V 1.1

Contents 69
1 New Features 71
2 Changes in Wording 73
2.1 IEEE Language Update 73
2.1.1 Shall 74
2.1.2 Must.....74
2.1.3 Will.....74
2.1.4 Should 74
2.1.5 May.....75
2.1.6 Can.....75
2.2 Nomenclature Changes 75
3 Structure Changes 77
4 Deprecated Specifications 79
4.1 Deprecated Features 79
4.2 Deprecated Profiles.....79

Specification Volume 2
Core System Package
[Controller volume]

Table of Contents **5**

Part A
RADIO SPECIFICATION

Contents **27**

1 Scope **29**

2 Frequency Bands and Channel Arrangement **31**

3 Transmitter Characteristics **33**

3.1 Modulation Characteristics 34
3.2 Spurious Emissions 35
3.2.1 In-band spurious emission 35
3.3 Radio Frequency Tolerance 36

4 Receiver Characteristics **37**

4.1 Actual Sensitivity Level 37
4.2 Interference Performance 37
4.3 Out-of-Band Blocking 38
4.4 Intermodulation Characteristics 38
4.5 Maximum Usable Level 39
4.6 Receiver Signal Strength Indicator 39
4.7 Reference Signal Definition 39

5 Appendix A **41**

6 Appendix B **43**

Part B
BASEBAND SPECIFICATION

Contents

Contents **47**

1 General Description **53**
1.1 Bluetooth Clock 54
1.2 Bluetooth Device Addressing 55
1.2.1 Reserved addresses 55
1.3 Access Codes 56

2 Physical Channels **57**
2.1 Physical Channel Definition 58
2.2 Basic Piconet Physical Channel 58
2.2.1 Master-slave definition 58
2.2.2 Hopping characteristics 59
2.2.3 Time slots 59
2.2.4 Piconet clocks 60
2.2.5 Transmit/receive timing 60
2.3 Adapted Piconet Physical Channel 63
2.3.1 Hopping characteristics 63
2.4 Page Scan Physical Channel 64
2.4.1 Clock estimate for paging 64
2.4.2 Hopping characteristics 64
2.4.3 Paging procedure timing 65
2.4.4 Page response timing 66
2.5 Inquiry Scan Physical Channel 68
2.5.1 Clock for inquiry 68
2.5.2 Hopping characteristics 68
2.5.3 Inquiry procedure timing 68
2.5.4 Inquiry response timing 68
2.6 Hop Selection 70
2.6.1 General selection scheme 70
2.6.2 Selection kernel 74
2.6.3 Adapted hop selection kernel 77
2.6.4 Control word 78

3 Physical Links **83**
3.1 Link Supervision 83

4 Logical Transports 85
4.1 General 85
4.2 Logical Transport Address (LT_ADDR) 85
4.3 Synchronous Logical Transports 86
4.4 Asynchronous Logical Transport 86
4.5 Transmit/Receive Routines 87
4.5.1 TX Routine 87
4.5.2 RX routine 90
4.5.3 Flow control 91
4.6 Active Slave Broadcast Transport 92
4.7 Parked Slave Broadcast Transport 93
4.7.1 Parked member address (PM_ADDR) 93
4.7.2 Access request address (AR_ADDR) 93
5 Logical Links 95
5.1 Link Control Logical Link (LC) 95
5.2 ACL Control Logical Link (ACL-C) 95
5.3 User Asynchronous/Isochronous Logical Link (ACL-U) 95
5.3.1 Pausing the ACL-U logical link 96
5.4 User Synchronous Data Logical Link (SCO-S) 96
5.5 User Extended Synchronous Data Logical Link (eSCO-S) 96
5.6 Logical Link Priorities 96
6 Packets 97
6.1 General Format 97
6.2 Bit Ordering 97
6.3 Access Code 98
6.3.1 Access code types 98
6.3.2 Preamble 99
6.3.3 Sync word 99
6.3.4 Trailer 102
6.4 Packet Header 103
6.4.1 LT_ADDR 103
6.4.2 TYPE 103
6.4.3 FLOW 104
6.4.4 ARQN 104
6.4.5 SEQN 104
6.4.6 HEC 104

6.5 Packet Types 105
6.5.1 Common packet types 106
6.5.2 SCO packets 109
6.5.3 eSCO packets 110
6.5.4 ACL packets 111
6.6 Payload Format 112
6.6.1 Synchronous data field 112
6.6.2 Asynchronous data field 113
6.7 Packet Summary 116
7 Bitstream Processing 117
7.1 Error Checking 118
7.1.1 HEC generation 118
7.1.2 CRC generation 119
7.2 Data Whitening 121
7.3 Error Correction 122
7.4 FEC Code: Rate 1/3 122
7.5 FEC Code: Rate 2/3 123
7.6 ARQ Scheme 124
7.6.1 Unnumbered ARQ 124
7.6.2 Retransmit filtering 127
7.6.3 Flushing payloads 130
7.6.4 Multi-slave considerations 130
7.6.5 Broadcast packets 130
8 Link Controller Operation 133
8.1 Overview of States 133
8.2 Standby State 134
8.3 Connection Establishment Substates 134
8.3.1 Page scan substate 134
8.3.2 Page substate 136
8.3.3 Page response substates 139
8.4 Device Discovery Substates 143
8.4.1 Inquiry scan substate 144
8.4.2 Inquiry substate 145
8.4.3 Inquiry response substate 147
8.5 Connection State 148

8.6 Active Mode 149
8.6.1 Polling in the active mode 150
8.6.2 SCO 150
8.6.3 eSCO 151
8.6.4 Broadcast scheme 154
8.6.5 Role switch 155
8.6.6 Scatternet 157
8.6.7 Hop sequence switching 158
8.6.8 Channel classification and channel map selection 161
8.6.9 Power Management 162
8.7 Sniff Mode 163
8.7.1 Sniff Transition Mode 164
8.8 Hold Mode 165
8.9 Park State 165
8.9.1 Beacon train 166
8.9.2 Beacon access window 168
8.9.3 Parked slave synchronization 169
8.9.4 Parking 170
8.9.5 Master-initiated unparking 171
8.9.6 Slave-initiated unparking 171
8.9.7 Broadcast scan window 172
8.9.8 Polling in the park state 172

9 Audio 173
9.1 LOG PCM CODEC 173
9.2 CVSD CODEC 173
9.3 Error Handling 176
9.4 General Audio Requirements 176
9.4.1 Signal levels 176
9.4.2 CVSD audio quality 176

10 List of Figures 177

11 List of Tables 181

Appendix A:
General Audio Recommendations 182

Appendix B:
Timers 185

Appendix C:
Recommendations for AFH Operation in Park, Hold and Sniff 187

Part C
LINK MANAGER PROTOCOL

Contents **191**

1 Introduction **195**

2 General Rules **197**
2.1 Message Transport 197
2.2 Synchronization 197
2.3 Packet Format 198
2.4 Transactions 199
2.4.1 LMP Response Timeout 200
2.5 Error Handling 200
2.5.1 Transaction collision resolution 201
2.6 Procedure Rules 201
2.7 General Response Messages 202
2.8 LMP Message Constraints 202

3 Device Features **203**
3.1 General Description 203
3.2 Feature Definitions 203
3.3 Feature Mask Definition 207
3.4 Link Manager Interoperability policy 208

4 Procedure Rules **209**
4.1 Connection Control 209
4.1.1 Connection establishment 209
4.1.2 Detach 210
4.1.3 Power control 211
4.1.4 Adaptive frequency hopping 213
4.1.5 Channel classification 216
4.1.6 Link supervision 218
4.1.7 Channel quality driven data rate change (CQDDR) 219
4.1.8 Quality of service (QoS) 220
4.1.9 Paging scheme parameters 222
4.1.10 Control of multi-slot packets 223
4.2 Security 224
4.2.1 Authentication 224
4.2.2 Pairing 226
4.2.3 Change link key 229
4.2.4 Change current link key type 230
4.2.5 Encryption 232
4.2.6 Request supported encryption key size 236

4.3 Informational Requests 237
4.3.1 Timing accuracy 237
4.3.2 Clock offset 238
4.3.3 LMP version 238
4.3.4 Supported features 239
4.3.5 Name request 241
4.4 Role Switch 242
4.4.1 Slot offset 242
4.4.2 Role switch 243
4.5 Modes of Operation 245
4.5.1 Hold mode 245
4.5.2 Park state 247
4.5.3 Sniff mode 253
4.6 Logical Transports 256
4.6.1 SCO logical transport 256
4.6.2 eSCO logical transport 259
4.7 Test Mode 264
4.7.1 Activation and deactivation of test mode 264
4.7.2 Control of test mode 265
4.7.3 Summary of test mode PDUs 266
5 Summary 269
5.1 PDU Summary 269
5.2 Parameter Definitions 277
5.3 Default Values 284
6 List of Figures 285
7 List of Tables 289

Part D
ERROR CODES

Contents **293**

1 Overview of Error Codes **295**
1.1 Usage Descriptions 295
1.2 HCI Command Errors 295
1.3 List of Error Codes 296

2 Error Code Descriptions **299**
2.1 Unknown HCI Command (0X01) 299
2.2 Unknown Connection Identifier (0X02) 299
2.3 Hardware Failure (0X03) 299
2.4 Page Timeout (0X04) 299
2.5 Authentication Failure (0X05) 299
2.6 PIN Missing (0X06) 299
2.7 Memory Capacity Exceeded (0X07) 299
2.8 Connection Timeout (0X08) 300
2.9 Connection Limit Exceeded (0X09) 300
2.10 Synchronous Connection Limit to a Device Exceeded (0X0A) 300
2.11 ACL Connection Already Exists (0X0B) 300
2.12 Command Disallowed (0X0C) 300
2.13 Connection Rejected due to Limited Resources (0X0D) 300
2.14 Connection Rejected due to Security Reasons (0X0E) 300
2.15 Connection Rejected due to Unacceptable BD_ADDR (0X0F) 301
2.16 Connection Accept Timeout Exceeded (0X10) 301
2.17 Unsupported Feature or Parameter Value (0X11) 301
2.18 Invalid HCI Command Parameters (0X12) 301
2.19 Remote User Terminated Connection (0X13) 301
2.20 Remote Device Terminated Connection due to Low Resources (0X14) 302
2.21 Remote Device Terminated Connection due to Power Off (0X15) 302
2.22 Connection Terminated by Local Host (0X16) 302
2.23 Repeated Attempts (0X17) 302
2.24 Pairing not Allowed (0X18) 302
2.25 Unknown LMP PDU (0X19) 302
2.26 Unsupported Remote Feature (0X1A) 302
2.27 SCO Offset Rejected (0X1B) 302
2.28 SCO Interval Rejected (0X1C) 303
2.29 SCO Air Mode Rejected (0X1D) 303
2.30 Invalid LMP Parameters (0X1E) 303
2.31 Unspecified Error (0X1F) 303
2.32 Unsupported LMP Parameter Value (0X20) 303

2.33 Role Change Not Allowed (0X21) 303
2.34 LMP Response Timeout (0X22) 303
2.35 LMP Error Transaction Collision (0X23) 304
2.36 LMP PDU Not Allowed (0X24) 304
2.37 Encryption Mode Not Acceptable (0X25) 304
2.38 Link Key Can Not be Changed (0X26) 304
2.39 Requested Qos Not Supported (0X27) 304
2.40 Instant Passed (0X28) 304
2.41 Pairing with Unit Key Not Supported (0X29) 304
2.42 Different Transaction Collision (0x2a) 304
2.43 QoS Unacceptable Parameter (0X2C) 304
2.44 QoS Rejected (0X2D) 305
2.45 Channel Classification Not Supported (0X2E) 305
2.46 Insufficient Security (0X2F) 305
2.47 Parameter out of Mandatory Range (0X30) 305
2.48 Role Switch Pending (0X32) 305
2.49 Reserved Slot Violation (0X34) 305
2.50 Role Switch Failed (0X35) 305

Part E
HOST CONTROLLER INTERFACE FUNCTIONAL SPECIFICATION

Contents **309**

1 Introduction **317**
1.1 Lower Layers of the Bluetooth Software Stack 317

2 Overview of Host Controller Transport Layer **319**

3 Overview of Commands and Events **321**
3.1 Generic Events 322
3.2 Device Setup 322
3.3 Controller Flow Control 323
3.4 Controller Information 323
3.5 Controller Configuration 324
3.6 Device Discovery 325
3.7 Connection Setup 327
3.8 Remote Information 329
3.9 Synchronous Connections 330
3.10 Connection State 331
3.11 Piconet Structure 332
3.12 Quality of Service 333
3.13 Physical Links 334
3.14 Host Flow Control 335
3.15 Link Information 336
3.16 Authentication and Encryption 337
3.17 Testing 339
3.18 Alphabetical List of Commands and Events 340

4 HCI Flow Control **345**
4.1 Host to Controller Data Flow Control 345
4.2 Controller to Host Data Flow Control 346
4.3 Disconnection Behaviour 347
4.4 Command Flow Control 347
4.5 Command Error Handling 348

5 HCI Data Formats **349**
5.1 Introduction 349
5.2 Data and Parameter Formats 349
5.3 Connection Handles 350
5.4 Exchange of HCI-Specific Information 351
5.4.1 HCI Command Packet 351
5.4.2 HCI ACL Data Packets 353
5.4.3 HCI Synchronous Data Packets 355
5.4.4 HCI Event Packet 356

6 HCI Configuration Parameters 357
6.1 Scan Enable 357
6.2 Inquiry Scan Interval 357
6.3 Inquiry Scan Window 358
6.4 Inquiry Scan Type 358
6.5 Inquiry Mode 358
6.6 Page Timeout 359
6.7 Connection Accept Timeout 359
6.8 Page Scan Interval 360
6.9 Page Scan Window 360
6.10 Page Scan Period Mode 360
6.11 Page Scan Type 361
6.12 Voice Setting 361
6.13 PIN Type 362
6.14 Link Key 362
6.15 Authentication Enable 362
6.16 Encryption Mode 363
6.17 Failed Contact Counter 364
6.18 Hold Mode Activity 364
6.19 Link Policy Settings 365
6.20 Flush Timeout 366
6.21 Num Broadcast Retransmissions 366
6.22 Link Supervision Timeout 367
6.23 Synchronous Flow Control Enable 367
6.24 Local Name 368
6.25 Class Of Device 368
6.26 Supported Commands 369
7 HCI Commands and Events 373
7.1 Link Control Commands 373
7.1.1 Inquiry Command 373
7.1.2 Inquiry Cancel Command 375
7.1.3 Periodic Inquiry Mode Command 376
7.1.4 Exit Periodic Inquiry Mode Command 379
7.1.5 Create Connection Command 380
7.1.6 Disconnect Command 383
7.1.7 Create Connection Cancel Command 384
7.1.8 Accept Connection Request Command 386
7.1.9 Reject Connection Request Command 388
7.1.10 Link Key Request Reply Command 389
7.1.11 Link Key Request Negative Reply Command 391
7.1.12 PIN Code Request Reply Command 392

7.1.13 PIN Code Request Negative Reply Command 394
7.1.14 Change Connection Packet Type Command 395
7.1.15 Authentication Requested Command.....398
7.1.16 Set Connection Encryption Command 399
7.1.17 Change Connection Link Key Command 400
7.1.18 Master Link Key Command 401
7.1.19 Remote Name Request Command 402
7.1.20 Remote Name Request Cancel Command 404
7.1.21 Read Remote Supported Features Command.....405
7.1.22 Read Remote Extended Features Command 406
7.1.23 Read Remote Version Information Command.....407
7.1.24 Read Clock Offset Command.....408
7.1.25 Read LMP Handle Command 409
7.1.26 Setup Synchronous Connection Command 411
7.1.27 Accept Synchronous Connection Request Command 415
7.1.28 Reject Synchronous Connection Request Command .419
7.2 Link Policy Commands.....420
7.2.1 Hold Mode Command 420
7.2.2 Sniff Mode Command.....422
7.2.3 Exit Sniff Mode Command.....425
7.2.4 Park State Command 426
7.2.5 Exit Park State Command 428
7.2.6 QoS Setup Command 429
7.2.7 Role Discovery Command.....431
7.2.8 Switch Role Command.....432
7.2.9 Read Link Policy Settings Command 433
7.2.10 Write Link Policy Settings Command 434
7.2.11 Read Default Link Policy Settings Command 436
7.2.12 Write Default Link Policy Settings Command 437
7.2.13 Flow Specification Command 438
7.3 Controller & Baseband Commands.....440
7.3.1 Set Event Mask Command.....440
7.3.2 Reset Command 442
7.3.3 Set Event Filter Command 443
7.3.4 Flush Command 448
7.3.5 Read PIN Type Command 450
7.3.6 Write PIN Type Command.....451
7.3.7 Create New Unit Key Command 452

7.3.8 Read Stored Link Key Command....453
7.3.9 Write Stored Link Key Command....454
7.3.10 Delete Stored Link Key Command....456
7.3.11 Write Local Name Command....457
7.3.12 Read Local Name Command....458
7.3.13 Read Connection Accept Timeout Command....459
7.3.14 Write Connection Accept Timeout Command....460
7.3.15 Read Page Timeout Command....461
7.3.16 Write Page Timeout Command....462
7.3.17 Read Scan Enable Command....463
7.3.18 Write Scan Enable Command....464
7.3.19 Read Page Scan Activity Command....465
7.3.20 Write Page Scan Activity Command....467
7.3.21 Read Inquiry Scan Activity Command....468
7.3.22 Write Inquiry Scan Activity Command....469
7.3.23 Read Authentication Enable Command....470
7.3.24 Write Authentication Enable Command....471
7.3.25 Read Encryption Mode Command....472
7.3.26 Write Encryption Mode Command....473
7.3.27 Read Class of Device Command....474
7.3.28 Write Class of Device Command....475
7.3.29 Read Voice Setting Command....476
7.3.30 Write Voice Setting Command....477
7.3.31 Read Automatic Flush Timeout Command....478
7.3.32 Write Automatic Flush Timeout Command....479
7.3.33 Read Num Broadcast Retransmissions Command....480
7.3.34 Write Num Broadcast Retransmissions Command....481
7.3.35 Read Hold Mode Activity Command....482
7.3.36 Write Hold Mode Activity Command....483
7.3.37 Read Transmit Power Level Command....484
7.3.38 Read Synchronous Flow Control Enable Command...486
7.3.39 Write Synchronous Flow Control Enable Command...487
7.3.40 Set Controller To Host Flow Control Command....488
7.3.41 Host Buffer Size Command....489
7.3.42 Host Number Of Completed Packets Command....491
7.3.43 Read Link Supervision Timeout Command....493
7.3.44 Write Link Supervision Timeout Command....494
7.3.45 Read Number Of Supported IAC Command....496

7.3.46 Read Current IAC LAP Command 497
7.3.47 Write Current IAC LAP Command.....498
7.3.48 Read Page Scan Period Mode Command 500
7.3.49 Write Page Scan Period Mode Command 501
7.3.50 Set AFH Host Channel Classification Command 502
7.3.51 Read Inquiry Scan Type Command 503
7.3.52 Write Inquiry Scan Type Command 504
7.3.53 Read Inquiry Mode Command 505
7.3.54 Write Inquiry Mode Command 506
7.3.55 Read Page Scan Type Command 507
7.3.56 Write Page Scan Type Command 508
7.3.57 Read AFH Channel Assessment Mode Command 509
7.3.58 Write AFH Channel Assessment Mode Command 510
7.4 Informational Parameters.....512
7.4.1 Read Local Version Information Command.....512
7.4.2 Read Local Supported Commands Command.....514
7.4.3 Read Local Supported Features Command.....515
7.4.4 Read Local Extended Features Command 516
7.4.5 Read Buffer Size Command.....518
7.4.6 Read BD_ADDR Command 520
7.5 Status Parameters.....521
7.5.1 Read Failed Contact Counter Command 521
7.5.2 Reset Failed Contact Counter Command 523
7.5.3 Read Link Quality Command 524
7.5.4 Read RSSI Command.....525
7.5.5 Read AFH Channel Map Command 527
7.5.6 Read Clock Command 529
7.6 Testing Commands 531
7.6.1 Read Loopback Mode Command 531
7.6.2 Write Loopback Mode Command.....532
7.6.3 Enable Device Under Test Mode Command 535
7.7 Events 537
7.7.1 Inquiry Complete Event.....537
7.7.2 Inquiry Result Event 538
7.7.3 Connection Complete Event.....540
7.7.4 Connection Request Event.....541
7.7.5 Disconnection Complete Event 543
7.7.6 Authentication Complete Event 544

7.7.7 Remote Name Request Complete Event 545
7.7.8 Encryption Change Event 546
7.7.9 Change Connection Link Key Complete Event 547
7.7.10 Master Link Key Complete Event 548
7.7.11 Read Remote Supported Features Complete Event... 549
7.7.12 Read Remote Version Information Complete Event ... 550
7.7.13 QoS Setup Complete Event 551
7.7.14 Command Complete Event 553
7.7.15 Command Status Event 554
7.7.16 Hardware Error Event 555
7.7.17 Flush Occurred Event 555
7.7.18 Role Change Event 556
7.7.19 Number Of Completed Packets Event 557
7.7.20 Mode Change Event 558
7.7.21 Return Link Keys Event 560
7.7.22 PIN Code Request Event 561
7.7.23 Link Key Request Event 562
7.7.24 Link Key Notification Event 563
7.7.25 Loopback Command Event 564
7.7.26 Data Buffer Overflow Event 564
7.7.27 Max Slots Change Event 565
7.7.28 Read Clock Offset Complete Event 566
7.7.29 Connection Packet Type Changed Event 567
7.7.30 QoS Violation Event 569
7.7.31 Page Scan Repetition Mode Change Event 570
7.7.32 Flow Specification Complete Event 571
7.7.33 Inquiry Result with RSSI Event 573
7.7.34 Read Remote Extended Features Complete Event 575
7.7.35 Synchronous Connection Complete Event 576
7.7.36 Synchronous Connection Changed event 578

8 List of Figures 581

9 List of Tables 583

Appendix A:
Deprecated Commands, Events and Configuration Parameters 585

Part F
MESSAGE SEQUENCE CHARTS

Contents **595**

1 Introduction **599**
1.1 Notation 599
1.2 Flow of Control 600
1.3 Example MSC 600

2 Services Without Connection Request **601**
2.1 Remote Name Request 601
2.2 One-time Inquiry 602
2.3 Periodic Inquiry 604

3 ACL Connection Establishment and Detachment **607**
3.1 Connection Setup 608

4 Optional Activities After ACL Connection Establishment **615**
4.1 Authentication Requested 615
4.2 Set Connection Encryption 616
4.3 Change Connection Link Key 617
4.4 Master Link Key 618
4.5 Read Remote Supported Features 620
4.6 Read Remote Extended Features 620
4.7 Read Clock Offset 621
4.8 Read Remote Version Information 621
4.9 QOS Setup 622
4.10 Switch Role 622

5 Synchronous Connection Establishment and Detachment **625**
5.1 Synchronous Connection Setup 625

6 Sniff, Hold and Park **631**
6.1 Sniff Mode 631
6.2 Hold Mode 632
6.3 Park State 634

7 Buffer Management, Flow Control **637**

8 Loopback Mode **639**
8.1 Local Loopback Mode 639
8.2 Remote Loopback Mode 641

9 List of Figures **643**

Part G
SAMPLE DATA

Contents **647**

1 Encryption Sample Data **649**
1.1 Generating Kc' from Kc, ... 649
1.2 First Set of Sample Data 652
1.3 Second Set of Sample Data 660
1.4 Third Set of Samples 668
1.5 Fourth Set of Samples 676

2 Frequency Hopping Sample Data **685**
2.1 First set 686
2.2 Second set 692
2.3 Third set 698

3 Access Code Sample Data **705**

4 HEC and Packet Header Sample Data **709**

5 CRC Sample Data **711**

6 Complete Sample Packets **713**
6.1 Example of DH1 Packet 713
6.2 Example of DM1 Packet 714

7 Whitening Sequence Sample Data **715**

8 FEC Sample Data **719**

9 Encryption Key Sample Data **721**
9.1 Four Tests of E1 721
9.2 Four Tests of E21 726
9.3 Three Tests of E22 728
9.4 Tests of E22 With Pin Augmenting 730
9.5 Four Tests of E3 740

Part H
SECURITY SPECIFICATION

Contents **747**

1 Security Overview **749**

2 Random Number Generation **751**

3 Key Management **753**

3.1 Key Types 753

3.2 Key Generation and Initialization 755

3.2.1 Generation of initialization key, ... 756

3.2.2 Authentication 756

3.2.3 Generation of a unit key 756

3.2.4 Generation of a combination key 757

3.2.5 Generating the encryption key 758

3.2.6 Point-to-multipoint configuration 759

3.2.7 Modifying the link keys 760

3.2.8 Generating a master key 760

4 Encryption **763**

4.1 Encryption Key Size Negotiation 764

4.2 Encryption of Broadcast Messages 764

4.3 Encryption Concept 765

4.4 Encryption Algorithm 766

4.4.1 The operation of the cipher 768

4.5 LFSR Initialization 769

4.6 Key Stream Sequence 772

5 Authentication **773**

5.1 Repeated Attempts 775

6 The Authentication And Key-Generating Functions **777**

6.1 The Authentication Function E1 777

6.2 The Functions Ar and A’r 779

6.2.1 The round computations 779

6.2.2 The substitution boxes “e” and “l” 779

6.2.3 Key scheduling 780

6.3 E2-Key Generation Function for Authentication 781

6.4 E3-Key Generation Function for Encryption 783

7 List of Figures **785**

8 List of Tables **787**

Specification Volume 3
Core System Package
[Host volume]

Table of Contents **5**

Part A
LOGICAL LINK CONTROL AND ADAPTATION PROTOCOL SPECIFICATION

Contents **17**

1 Introduction **21**
1.1 L2CAP Features 21
1.2 Assumptions 25
1.3 Scope 25
1.4 Terminology 26

2 General Operation **29**
2.1 Channel Identifiers 29
2.2 Operation Between Devices 29
2.3 Operation Between Layers 31
2.4 Modes of Operation 31

3 Data Packet Format **33**
3.1 Connection-oriented Channel in Basic L2CAP Mode 33
3.2 Connectionless Data Channel in Basic L2CAP Mode 34
3.3 Connection-oriented Channel in Retransmission/Flow Control Modes 35
3.3.1 L2CAP header fields 35
3.3.2 Control field (2 octets) 36
3.3.3 L2CAP SDU length field (2 octets) 38
3.3.4 Information payload field (0 to 65531 octets) 38
3.3.5 Frame check sequence (2 octets) 39
3.3.6 Invalid frame detection 40

4 Signalling Packet Formats **41**
4.1 Command Reject (code 0x01) 43
4.2 Connection Request (code 0x02) 44
4.3 Connection Response (code 0x03) 46
4.4 Configuration Request (code 0x04) 47
4.5 Configuration Response (code 0x05) 50
4.6 Disconnection Request (code 0x06) 52
4.7 Disconnection Response (code 0x07) 53
4.8 Echo Request (code 0x08) 53
4.9 Echo Response (code 0x09) 54

4.10 Information Request (code 0x0A) 54
4.11 Information Response (code 0x0B)....55
4.12 Extended Feature Mask 56

5 Configuration Parameter Options....57
5.1 Maximum Transmission Unit (MTU)....57
5.2 Flush Timeout Option 59
5.3 Quality of Service (QoS) Option....60
5.4 Retransmission and Flow Control Option....64

6 State Machine 67
6.1 General rules for the state machine: 67
6.1.1 CLOSED state 68
6.1.2 WAIT_CONNECT_RSP state 69
6.1.3 WAIT_CONNECT state 69
6.1.4 CONFIG state....70
6.1.5 OPEN state 73
6.1.6 WAIT_DISCONNECT state 73
6.2 Timers events....74
6.2.1 RTX 74
6.2.2 ERTX....75

7 General Procedures 79
7.1 Configuration Process....79
7.1.1 Request path 80
7.1.2 Response path 80
7.2 Fragmentation and Recombination 81
7.2.1 Fragmentation of L2CAP PDUs 81
7.2.2 Recombination of L2CAP PDUs....82
7.3 Encapsulation of SDUs 83
7.3.1 Segmentation of L2CAP SDUs 83
7.3.2 Reassembly of L2CAP SDUs....84
7.3.3 Segmentation and fragmentation 84
7.4 Delivery of Erroneous L2CAP SDUs....85
7.5 Operation with Flushing 85
7.6 Connectionless Data Channel....86

8 Procedures for Flow Control and Retransmission 87
8.1 Information Retrieval 87
8.2 Function of PDU Types for Flow Control and Retransmission ... 87
8.2.1 Information frame (I-frame) 87
8.2.2 Supervisory Frame (S-frame) 87
8.3 Variables and Sequence Numbers 89
8.3.1 Sending peer 89
8.3.2 Receiving peer 91
8.4 Retransmission Mode 93
8.4.1 Transmitting frames 93
8.4.2 Receiving I-frames 95
8.4.3 I-frames pulled by the SDU reassembly function 95
8.4.4 Sending and receiving acknowledgements 96
8.4.5 Receiving REJ frames 97
8.4.6 Waiting acknowledgements 97
8.4.7 Exception conditions 97
8.5 Flow Control Mode 99
8.5.1 Transmitting I-frames 99
8.5.2 Receiving I-frames 100
8.5.3 I-frames pulled by the SDU reassembly function 100
8.5.4 Sending and receiving acknowledgements 100
8.5.5 Waiting acknowledgements 101
8.5.6 Exception conditions 101
9 List of Figures 103
10 List of Tables 105

Appendix A:
Configuration MSCs 107

Part B
SERVICE DISCOVERY PROTOCOL (SDP)

Contents **113**

1 Introduction **115**
1.1 General Description 115
1.2 Motivation 115
1.3 Requirements 115
1.4 Non-requirements and Deferred Requirements 116
1.5 Conventions 116
1.5.1 Bit And Byte Ordering Conventions 116

2 Overview **117**
2.1 SDP Client-Server Interaction 117
2.2 Service Record 118
2.3 Service Attribute 120
2.4 Attribute ID 120
2.5 Attribute Value 121
2.6 Service Class 121
2.6.1 A Printer Service Class Example 122
2.7 Searching for Services 123
2.7.1 UUID 123
2.7.2 Service Search Patterns 124
2.8 Browsing for Services 124
2.8.1 Example Service Browsing Hierarchy 125

3 Data Representation **127**
3.1 Data Element 127
3.2 Data Element Type Descriptor 127
3.3 Data Element Size Descriptor 128
3.4 Data Element Examples 129

4 Protocol Description **131**
4.1 Transfer Byte Order 131
4.2 Protocol Data Unit Format 131
4.3 Partial Responses and Continuation State 133
4.4 Error Handling 133
4.4.1 SDP_ErrorResponse PDU 134
4.5 ServiceSearch Transaction 135
4.5.1 SDP_ServiceSearchRequest PDU 135
4.5.2 SDP_ServiceSearchResponse PDU 136
4.6 ServiceAttribute Transaction 138
4.6.1 SDP_ServiceAttributeRequest PDU 138
4.6.2 SDP_ServiceAttributeResponse PDU 140

4.7 ServiceSearchAttribute Transaction 141
4.7.1 SDP_ServiceSearchAttributeRequest PDU 141
4.7.2 SDP_ServiceSearchAttributeResponse PDU 143
5 Service Attribute Definitions 145
5.1 Universal Attribute Definitions 145
5.1.1 ServiceRecordHandle Attribute 145
5.1.2 ServiceClassIDList Attribute 146
5.1.3 ServiceRecordState Attribute 146
5.1.4 ServiceID Attribute 146
5.1.5 ProtocolDescriptorList Attribute 147
5.1.6 BrowseGroupList Attribute 148
5.1.7 LanguageBaseAttributeIDList Attribute 148
5.1.8 ServiceInfoTimeToLive Attribute 149
5.1.9 ServiceAvailability Attribute 150
5.1.10 BluetoothProfileDescriptorList Attribute 150
5.1.11 DocumentationURL Attribute 151
5.1.12 ClientExecutableURL Attribute 151
5.1.13 IconURL Attribute 152
5.1.14 ServiceName Attribute 152
5.1.15 ServiceDescription Attribute 153
5.1.16 ProviderName Attribute 153
5.1.17 Reserved Universal Attribute IDs 153
5.2 ServiceDiscoveryServer Service Class Attribute Definitions ... 154
5.2.1 ServiceRecordHandle Attribute 154
5.2.2 ServiceClassIDList Attribute 154
5.2.3 VersionNumberList Attribute 154
5.2.4 ServiceDatabaseState Attribute 155
5.2.5 Reserved Attribute IDs 155
5.3 BrowseGroupDescriptor Service Class Attribute Definitions ... 155
5.3.1 ServiceClassIDList Attribute 155
5.3.2 GroupID Attribute 156
5.3.3 Reserved Attribute IDs 156

Appendix A:
Background Information 157

Appendix B:
Example SDP Transactions 158

Part C
GENERIC ACCESS PROFILE

Contents **173**
Foreword **177**

1 Introduction **179**
1.1 Scope 179
1.2 Symbols and conventions 179
1.2.1 Requirement status symbols 179
1.2.2 Signaling diagram conventions 180
1.2.3 Notation for timers and counters 180

2 Profile overview **181**
2.1 Profile stack 181
2.2 Configurations and roles 181
2.3 User requirements and scenarios 182
2.4 Profile fundamentals 183
2.5 Conformance 183

3 User interface aspects **185**
3.1 The user interface level 185
3.2 Representation of Bluetooth parameters 185
3.2.1 Bluetooth device address (BD_ADDR) 185
3.2.2 Bluetooth device name (the user-friendly name) 185
3.2.3 Bluetooth passkey (Bluetooth PIN) 186
3.2.4 Class of Device 187
3.3 Pairing 188

4 Modes **189**
4.1 Discoverability modes 189
4.1.1 Non-discoverable mode 190
4.1.2 Limited discoverable mode 190
4.1.3 General discoverable mode 191
4.2 Connectability modes 193
4.2.1 Non-connectable mode 193
4.2.2 Connectable mode 193
4.3 Pairing modes 195
4.3.1 Non-pairable mode 195
4.3.2 Pairable mode 195

5 Security aspects 197
5.1 Authentication 197
5.1.1 Purpose 197
5.1.2 Term on UI level 197
5.1.3 Procedure 198
5.1.4 Conditions 198
5.2 Security modes 198
5.2.1 Security mode 1 (non-secure) 200
5.2.2 Security mode 2 (service level enforced security) 200
5.2.3 Security modes 3 (link level enforced security) 200
6 Idle mode procedures 201
6.1 General inquiry 201
6.1.1 Purpose 201
6.1.2 Term on UI level 201
6.1.3 Description 202
6.1.4 Conditions 202
6.2 Limited inquiry 202
6.2.1 Purpose 202
6.2.2 Term on UI level 203
6.2.3 Description 203
6.2.4 Conditions 203
6.3 Name discovery 204
6.3.1 Purpose 204
6.3.2 Term on UI level 204
6.3.3 Description 204
6.3.4 Conditions 205
6.4 Device discovery 205
6.4.1 Purpose 205
6.4.2 Term on UI level 205
6.4.3 Description 206
6.4.4 Conditions 206
6.5 Bonding 206
6.5.1 Purpose 206
6.5.2 Term on UI level 206
6.5.3 Description 207
6.5.4 Conditions 208

7 Establishment procedures 209
7.1 Link establishment 209
7.1.1 Purpose 209
7.1.2 Term on UI level 209
7.1.3 Description 210
7.1.4 Conditions 211
7.2 Channel establishment....212
7.2.1 Purpose 212
7.2.2 Term on UI level 212
7.2.3 Description 212
7.2.4 Conditions 213
7.3 Connection establishment....214
7.3.1 Purpose 214
7.3.2 Term on UI level 214
7.3.3 Description 214
7.3.4 Conditions 215
7.4 Establishment of additional connection....215
8 Definitions....217
8.1 General definitions 217
8.2 Connection-related definitions....217
8.3 Device-related definitions....218
8.4 Procedure-related definitions 219
8.5 Security-related definitions....219
9 Appendix A (Normative): Timers and constants 221
10 Appendix B (Informative): Information flows of related procedures....223
11 References....227

Part D
TEST SUPPORT

Contents **231**

1 Test Methodology **233**
1.1 Test Scenarios 233
1.1.1 Test setup 233
1.1.2 Transmitter Test 234
1.1.3 LoopBack test 239
1.1.4 Pause test 242
1.2 References 242

2 Test Control Interface (TCI) **243**
2.1 Introduction 243
2.1.1 Terms used 243
2.1.2 Usage of the interface 243
2.2 TCI Configurations 244
2.2.1 Bluetooth RF requirements 244
2.2.2 Bluetooth protocol requirements 245
2.2.3 Bluetooth profile requirements 246
2.3 TCI Configuration and Usage 247
2.3.1 Transport layers 247
2.3.2 Baseband and link manager qualification 248
2.3.3 HCI qualification 250

Master Table of Contents & Compliance Requirements

Part B

BLUETOOTH COMPLIANCE REQUIREMENTS

This document specifies the requirements for Bluetooth compliance.

CONTENTS

1 Scope 45

2 Definitions 47

3 Legal Aspects 49

4 Introduction to the Bluetooth Qualification Program 51

1 SCOPE

The Bluetooth Promoters and the Bluetooth Adopters have signed the applicable Bluetooth Agreements. These agreements grant Bluetooth Promoters and Bluetooth Adopters a Bluetooth license for "products which comply with the Specification".

This document specifies the requirements which must be met by a Bluetooth Promoter or Bluetooth Adopter to demonstrate that a particular product does "comply with the Specification", thereby qualifying that particular product to be subject to the rights extended by the applicable Bluetooth Agreement.

The Bluetooth Qualification Program is the process by which a Bluetooth Promoter or a Bluetooth Adopter demonstrates that a particular product meets the requirements specified herein. This document provides an introduction to the Bluetooth Qualification Program. The Bluetooth Qualification Program is defined in the Bluetooth Qualification Program Reference Document (PRD) available on the Bluetooth Web site.

Regulatory requirements and governmental type approval requirements are outside the scope of this document.

Requirements on Trademark usage are outside the scope of this document and the Qualification Program. However, successful completion of the Qualification program is a precondition to usage of the Bluetooth Trademark. Details on trademark usage can be found in the applicable Bluetooth agreements and Bluetooth Trademark License Agreement.

2 DEFINITIONS

Bluetooth Agreements - Promoter, Early Adopters or Adopters Agreement, whichever is applicable.

Bluetooth License - All the rights, granted in the Promoter, Early Adopters or Adopters Agreements and the Bluetooth Trademark License

Bluetooth Qualification Administrator (BQA) - Responsible for administering the Bluetooth Qualification Program on behalf of the BQRB.

Bluetooth Qualification Body (BQB) - An individual person recognized by the BQRB to be responsible for checking declarations and documents against requirements, verifying the authenticity of product test reports, and listing products on the official Bluetooth Qualified Products List.

Bluetooth Qualification process - The process defined in the Bluetooth Qualification Program Reference Document (PRD) for Bluetooth Qualification.

Bluetooth Qualification program - The implementation of the Bluetooth Qualification process.

Bluetooth Qualification Review Board (BQRB) - Responsible for managing, reviewing and improving the Bluetooth Qualification program. The Bluetooth SIG promoter companies appoint delegates to the BQRB.

Bluetooth Qualification Test Facility (BQTF) - A test facility officially accredited by the BQRB to test Bluetooth products.

Bluetooth System Specification - The adopted version of this document.

Bluetooth Trademark - As defined in the Bluetooth Promoter, Early Adopters Agreement or Adopters Agreement for 1.0 Bluetooth Core Specification, or the Bluetooth Trademark License Agreement, whichever is applicable.

Compliant Portion - Only those specific portions of products (hardware, software or combinations thereof) that: (i) implement and are compliant with the Bluetooth System Specifications, (ii) are qualified pursuant to the Qualification Process, (iii) are within the bounds of the Scope and (iv) meet the requirements set forth in the Compliance Requirements.

Scope - As used in the definition of Compliant Portion, the protocols and data formats needed for Bluetooth interoperability, and the electrical signaling characteristics solely to the extent disclosed with particularity in the Bluetooth System Specifications where the sole purpose of such disclosure is to enable

products to interoperate, interconnect or communicate as defined within the Bluetooth System Specifications. For clarification, the Scope shall not include (i) any enabling technologies that may be necessary to make or use any prod-

uct or portion thereof that complies with the Bluetooth System Specifications, but are not themselves expressly set forth in the Bluetooth System Specifications (e.g., semiconductor manufacturing technology, compiler technology, object oriented technology, basic operating system technology, etc.); or (ii) the implementation of other published specifications developed elsewhere but referred to in the body of the Bluetooth System Specifications; or (iii) any portions of any product and any combinations thereof the purpose or function of which is not required for compliance with the Bluetooth System Specifications; or (iv) Application Programming Interfaces, applications, or user interfaces; including the technology used to generate, display or interact with a user.

3 LEGAL ASPECTS

Bluetooth adopters legal rights and obligations are governed by their applicable Bluetooth Agreements.

The Bluetooth Specification has been created according to our best knowledge, to meet regulatory requirements worldwide. Regulatory certification, as such, is not a part of the Bluetooth Qualification requirements, yet is a requirement in all markets. It is the sole responsibility of each manufacturer to ensure that their products have all necessary regulatory approvals for the markets where they are intended to be sold or used.

A product must complete Bluetooth Qualification as one of the requirements for “complying with the Specification”. Under all applicable Bluetooth Agreements, every product is required to successfully complete the Bluetooth Qualification process. The rights granted under the applicable Bluetooth agreements do not apply to products which have not completed the Qualification process.

Sanctions may be invoked by holders of intellectual property, against any company responsible for producing or trading (a) products containing elements of the Bluetooth Interface, as defined in applicable Bluetooth Agreements, that do not comply with the Specification, (b) which are not Compliant Portions, or (c) products, containing elements of the Bluetooth Interface, that have not completed Bluetooth Qualification.

4 INTRODUCTION TO THE BLUETOOTH QUALIFICATION PROGRAM

The Bluetooth Qualification program is the framework that establishes the qualification rules and procedures. This section introduces the framework. The Bluetooth Qualification Program as well as Qualification requirements are defined in the Bluetooth Qualification Program Reference Document (PRD) available on the Bluetooth web site. Additionally, Guidelines for Bluetooth assigned names and numbers are defined in the PRD.

The Program defines the following entities:

- Bluetooth Qualification Review Board (BQRB)
- Bluetooth Qualification Administrator (BQA)
- Bluetooth Qualification Test Facility (BQTF)
- Bluetooth Qualification Body (BQB)

Figure 4.1introduces the process by which a Member qualifies a product.

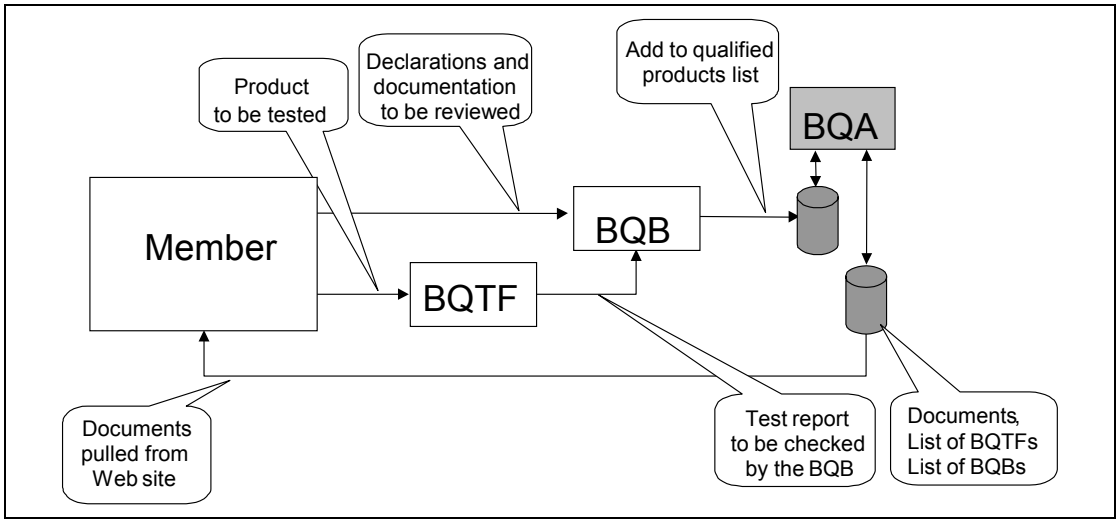

Figure 4.1:

An entity intending to produce and/or market a product, which includes Bluetooth functionality, must first become a Bluetooth Member by executing the applicable Bluetooth Agreements available via the Bluetooth Web site. Next, the Member must demonstrate that each particular product design complies with the Bluetooth System Specifications (including Compliance Requirements). This is accomplished when the particular product is listed as a.qualified product after successfully completing the Bluetooth Qualification process. For purposes of the rights granted under the applicable Bluetooth Agreement, the condition of Qualification is met from the date of listing. Under all applicable Bluetooth Agreements, every product is required to successfully complete the Bluetooth Qualification process. The rights granted under the applicable Blue-

tooth agreements do not apply to products which have not completed the Qualification process.

The Member selects a BQB from the list of recognized BQBs found on the Bluetooth web site. The BQB can assist the Member throughout the entire product qualification process. The Member prepares a compliance folder and works with the BQB to develop a product test plan. If the product test plan requires testing services of a BQTF, the Member can select a BQTF that has been accredited to perform the type of testing required. All necessary documentation to demonstrate compliance to the specification is provided to the BQB by the Member.

The BQB reviews the submittals and prepares a qualified product notice. In the event the BQB has a question regarding the conformance or interoperability of a product the BQB may, with the Member's permission, submit information via the BQA to the BQRB for a ruling. In the event the BQRB must be consulted, the Member will be requested to prepare a submission according to BQRB guidelines.

When all current requirements are satisfied, the BQB informs the Member that the product is ready for listing as a Bluetooth qualified product. With the consent of the Member, the BQB posts the product information to the official Qualified Product List.

A fee for product listing shall be paid by the BQB prior to product listing to finance the administration associated with the Qualification program.

Any Member can view the Bluetooth Qualified Product List. Confidential product information will not be published.

APPENDIX

CONTENTS

1 Revision History 57
1.1 [vol 0] Master TOC & Compliance Requirements 57
1.1.1 Bluetooth Compliance Requirements 57
1.2 [Vol 1] Architecture & Terminology Overview 57
1.3 [Vol 2 & 3] Core System Package 58
2 Contributors 59
2.1 [vol 0] Master TOC & Compliance Requirements 59
2.1.1 Part B: Bluetooth Compliance Requirements 59
2.2 [vol 1] Architecture &Terminology Overview 59
2.2.1 Part A: Architectural Overview 59
2.2.2 Part B: Acronyms & Abbreviations 60
2.2.3 Part C: Changes from Bluetooth Specification v1.1 60
2.3 [Vol 2] Core System Package, Controller 61
2.3.1 Part A: Radio Specification 61
2.3.2 Part B: Baseband Specification 62
2.3.3 Part C: Link Manager Protocol 65
2.3.4 Part D: Error Codes 66
2.3.5 Part E: Bluetooth Host Controller Interface Functional Specification 67
2.3.6 Part F: Message Sequence Charts 68
2.3.7 Part G: Sample Data 69
2.3.8 Part H: Security Specification 69
2.4 [Vol 3] Core System Package, Host 70
2.4.1 Part A: Logical Link Control and Adaptation Protocol Specification 70
2.4.2 Part B: Service Discovery Protocol (SDP) 71
2.4.3 Part C Generic Access Profile 72
2.4.4 Part D: Test Support 72

1 REVISION HISTORY

Public versions are marked with bold in the tables below.

Beginning with the v1.2 of the Core System Package all Bluetooth specification documents, protocols and profiles, are transferred to a new partitioning comprising 13 volumes instead of the two (Core and Profiles) previously used.

For more detailed information about changes between version published before v1.2, please see the Appendix I “Revision History” in v1.1.

1.1 [VOL 0] MASTER TOC & COMPLIANCE REQUIREMENTS

1.1.1 Bluetooth Compliance Requirements

Rev	Date	Comments
v1.2	Nov 05 2003	This Part was moved from the Core volume. No content changes been made to this document since v1.1

1.2 [VOL 1] ARCHITECTURE & TERMINOLOGY OVERVIEW

Rev	Date	Comments
v1.2	Nov 05 2003	New volume with informational content. This volume will always be updated in parallel with the Core System volumes

1.3 [VOL 2 & 3] CORE SYSTEM PACKAGE

Rev	Date	Comments
v1.2	Nov 05 2003	New features added in v1.2: - Architectual overview - Faster connection - Adaptive frequency hopping - Extended SCO links - Enhanced error detection and flow control - Enhanced synchronization capability - Enhanced flow specification The Core System Package now comprises two volumes and the text has gone through a radical change both in terms of structure and nomenclature. The language is also more precise and is adapted to meet the IEEE standard. The following parts are moved from the Core System Package to other volumes or has been deprecated: RFCOMM [vol 7], Object Exchange (IrDA Interoperability) [vol 8], TCS [vol 9], Interoperability Requirements for Bluetooth as a WAP Bearer [vol 6], HCI USB Transport Layer [vol4], HCI RS232 Transport Layer [vol 4], HCI UART Transport Layer [vol 4], Bluetooth Compliance Requirements [vol 0], Optional Paging Schemes [deprecated]
1.1	Feb 22nd 2001	The specification was updated with Errata items previously published on the website. The Bluetooth Assigned Numbers appendix was lifted out from the specification to allow continuos maintenance on the website.
1.0B	Dec 1st 1999	The specification was updated with Errata items previously published on the website and was revised from a linguistic point of view. The following parts was added: Interoperability Requirements for Bluetooth as a WAP Bearer, Test Control Interface, Sample Data (appendix), Bluetooth Audio (appendix), Baseband Timers (appendix) and Optional Paging Scheme (appendix)
1.0a	July 26th 1999	The first version of the Bluetooth Specification published on the public website. Added part: Bluetooth Compliance Requirements.
1.0 draft	July 5th 1999	The following parts was added: Service Discovery Protocol (SDP), Telephony Control Specification (TCS), Bluetooth Assigned Numbers (appendix) and Message Sequence Charts (appendix)
0.9	April 30th 1999	The following parts was added: IrDA Interoperability, HCI RS232 Transport Layer, HCI UART Transport Layer and Test Mode
0.8	Jan 21st 1999	The following parts was added: Radio Specification, L2CAP, RFCOMM, HCI & HCI USB Transport Layer
0.7	Oct 19th 1998	This first version only included Baseband and Link Manager Protocol

2 CONTRIBUTORS

2.1 [VOL 0] MASTER TOC & COMPLIANCE REQUIREMENTS

The Bluetooth Specification was compiled and edited by Dan Sönnerstam, Pyramid Communication AB.

2.1.1 Part B: Bluetooth Compliance Requirements

BQRB (Editor)	
Wayne Park	3Com Corporation
Lawrence Jones	ComBit, Inc.
Gary Robinson	IBM Corporation
Georges Seuron	IBM Corporation
Rick Jessop	Intel Corporation
John Webb	Intel Corporation
Bruce Littlefield	Lucent Technologies, Inc.
Brian A. Redding	Motorola, Inc.
Waldemar Hontscha	Nokia Corporation
Petri Morko	Nokia Corporation
Magnus Hansson	Telefonaktiebolaget LM Ericsson
Magnus Sommansson	Telefonaktiebolaget LM Ericsson
Göran Svennarp	Telefonaktiebolaget LM Ericsson
Warren Allen	Toshiba Corporation
John Shi	Toshiba Corporation

2.2 [VOL 1] ARCHITECTURE &TERMINOLOGY OVERVIEW

2.2.1 Part A: Architectural Overview

Jennifer Bray	CSR
Robin Heydon	CSR
Henrik Hedlund	Ericsson
Martin van der Zee	Ericsson
Andy Glass	Microsoft
Brian Redding	Motorola
Jürgen Schnitzler	Nokia
Thomas Müller	Nokia
Joel Linsky	Silicon Wave
Terry Bourk	Silicon Wave
Michael Hasling	Tality
Yoshimitsu Shimojo	Toshiba
Toshiki Kizu	Toshiba
John Mersh	TTPCom

2.2.2 Part B: Acronyms & Abbreviations

Dan Sönnerstam	Pyramid Communication AB

2.2.3 Part C: Changes from Bluetooth Specification v1.1

Tom Siep	Bluetooth SIG Inc.
Robin Heydon	CSR
Henrik Hedlund	Ericsson
Rob Davies	Philips
Joel Linsky	Silicon Wave
John Mersh	TTPCom

2.3 [VOL 2] CORE SYSTEM PACKAGE, CONTROLLER

2.3.1 Part A: Radio Specification

Version 1.2

Tom Siep	Bluetooth SIG Inc.
Jennifer Bray	CSR
Robin Heydon	CSR
Morten Gade	Digianswer/Motorola
Henrik Hedlund	Ericsson
Stefan Agnani	Ericsson
Robert Kokke	Ericsson
Roland Hellfajer	Infineon
Thomas Müller	Nokia
Antonio Salloum	Philips
Joel Linsky	Silicon Wave
Steve Hall	Silicon Wave
Oren Eliezer	Texas Instruments
Mike Fitton	Toshiba

Previous versions

Steve Williams	3Com Corporation
Todor V. Cooklov	Aware
Poul Hove Kristensen	Digianswer A/S
Kurt B. Fischer	Hyper Corporation
Kevin D. Marquess	Hyper Corporation
Troy Beukema	IBM Corporation
Brian Gaucher	IBM Corporation
Jeff Schiffer	Intel Corporation
James P. Gilb	Mobilian
Rich L. Ditch	Motorola, Inc.
Paul Burgess	Nokia Corporation
Olaf Joeressen	Nokia Corporation
Thomas Müller	Nokia Corporation
Arto T. Palin	Nokia Corporation
Steven J. Shellhammer	Symbol
Sven Mattisson	Telefonaktiebolaget LM Ericsson
Lars Nord (Section Owner)	Telefonaktiebolaget LM Ericsson
Anders Svensson	Telefonaktiebolaget LM Ericsson
Mary A. DuVal	Texas Instruments
Allen Hotari	Toshiba Corporation

2.3.2 Part B: Baseband Specification

Version 1.2

P G Madhavan	Agere
Hongbing Gan	Bandspeed, Inc.
Tod Sizer	Bell Labs
Alexander Thoukydides	CSR
Jennifer Bray	CSR
Robin Heydon	CSR
Kim Schneider	Digianswer/Motorola
Knud Dyring-Olsen	Digianswer/Motorola
Niels Nielsen	Digianswer/Motorola
Henrik Andersen	Digianswer/Motorola
Christian Gehrmann	Ericsson
Henrik Hedlund	Ericsson
Jan Åberg	Ericsson
Martin van der Zee	Ericsson
Rakesh Taori	Ericsson
Jaap Haartsen	Ericsson
Stefan Züerbes	Ericsson
Roland Hellfajer	Infineon
YC Maa	Integrated Programmable Communications, Inc.
HungKun Chen	Integrated Programmable Communications, Inc.
Steve McGowan	Intel
Adrian Stephens	Mobilian Corporation
Jim Lansford	Mobilian Corporation
Eric Meihofer	Motorola
Arto Palin	Nokia
Carmen Kuhl	Nokia
Hannu Laine	Nokia
Jürgen Schnitzler	Nokia
Päivi Ruuska	Nokia
Thomas Müller	Nokia
Antonio Salloum	Philips
Harmke de Groot	Philips
Marianne van de Casteelee	Philips
Rob Davies	Philips
Roland Matthijssen	Philips
Joel Linsky (section owner)	Silicon Wave
Terry Bourk	Silicon Wave
Gary Schneider	Symbol Technologies, Inc.
Stephen J. Shellhammer	Symbol Technologies, Inc.
Michael Hasling	Tality
Amihai Kidron	Texas Instruments
Dan Michael	Texas Instruments

Eli Dekel	Texas Instruments
Jie Liang	Texas Instruments
Oren Eliezer	Texas Instruments
Tally Shina	Texas Instruments
Yariv Raveh	Texas Instruments
Anuj Batra	Texas Instruments
Katsuhiro Kinoshita	Toshiba
Toshiki Kizu	Toshiba
Yoshimitsu Shimojo	Toshiba
Charles Sturman	TTPCom
John Mersh	TTPCom
Sam Turner	TTPCom
Christoph Scholtz	University of Bonn
Simon Baatz	University of Bonn

Previous versions

Kevin D. Marquess	Hyper Corporation
Chatschik Bisdikian	IBM Corporation
Kris Fleming	Intel Corporation
James P. Gilb	Mobilian
David E. Cypher	NIST
Nada Golmie	NIST
Olaf Joeressen	Nokia Corporation
Thomas Müller	Nokia Corporation
Charlie Mellone	Motorola, Inc.
Harmke de Groot	Philips
Terry Bourk	Silicon Wave
Steven J. Shellhammer	Symbol
Jaap Haartsen	Telefonaktiebolaget LM Ericsson
Henrik Hedlund (Section Owner)	Telefonaktiebolaget LM Ericsson
Tobias Melin	Telefonaktiebolaget LM Ericsson
Joakim Persson	Telefonaktiebolaget LM Ericsson
Mary A. DuVal	Texas Instruments
Onn Haran	Texas Instruments
Thomas M. Siep	Texas Instruments
Ayse Findikli	Zeevo, Inc.

Previous versions [Encryption Sample Data, appendix]

Thomas Müller	Nokia Corporation
Thomas Sander	Nokia Corporation
Joakim Persson (Section Owner)	Telefonaktiebolaget LM Ericsson

Previous versions [Bluetooth Audio, appendix]

Magnus Hansson	Telefonaktiebolaget LM Ericsson
Fisseha Mekuria	Telefonaktiebolaget LM Ericsson
Mats Omrin	Telefonaktiebolaget LM Ericsson
Joakim Persson (Section Owner)	Telefonaktiebolaget LM Ericsson

Previous versions [Baseband Timers, appendix]

David E. Cyper	NIST
Jaap Haartsen (Section Owner)	Telefonaktiebolaget LM Ericsson
Joakim Persson	Telefonaktiebolaget LM Ericsson
Ayse Findikli	Zeevo, Inc.

2.3.3 Part C: Link Manager Protocol

Version 1.2

Jennifer Bray	CSR
Robin Heydon	CSR
Simon Morris	CSR
Alexander Thoukydides	CSR
Kim Schneider	Digianswer/Motorola
Knud Dyring-Olsen	Digianswer/Motorola
Henrik Andersen	Digianswer/Motorola
Jan Åberg	Ericsson
Martin van der Zee	Ericsson
Roland Hellfajer	Infineon
YC Maa	Integrated Programmable Communications, Inc.
Steve McGowan	Intel
Tod Sizer	Lucent Technologies
Adrian Stephens	Mobilian
Jürgen Schnitzler	Nokia
Thomas Müller	Nokia
Carmen Kuhl	Nokia
Arto Palin	Nokia
Thomas Müller	Nokia
Roland Matthijssen	Philips
Rob Davies	Philips
Harmke de Groot	Philips
Antonio Salloum	Philips
Joel Linsky	Silicon Wave
Terry Bourk	Silicon Wave
Yariv Raveh	Texas Instruments
Tally Shina	Texas Instruments
Amihai Kidron	Texas Instruments
Yoshimitsu Shimojo	Toshiba
Toshiki Kizu	Toshiba
John Mersh (section owner)	TTPCom
Sam Turner	TTPCom

Previous versions

Kim Schneider	Digianswer A/S
Toru Aihara	IBM Corporation
Chatschik Bisdikian	IBM Corporation
Kris Fleming	Intel Corporation
David E. Cypher	NIST
Thomas Busse	Nokia Corporation
Julien Corthial	Nokia Corporation
Olaf Joeressen	Nokia Corporation
Thomas Müller	Nokia Corporation
Dong Nguyen	Nokia Corporation
Harmke de Groot	Philips
Terry Bourk	Silicon Wave
Johannes Elg	Telefonaktiebolaget LM Ericsson
Jaap Haartsen	Telefonaktiebolaget LM Ericsson
Tobias Melin (Section Owner)	Telefonaktiebolaget LM Ericsson
Mary A. DuVal	Texas Instruments
Onn Haran	Texas Instruments
John Mersh	TTPCom

2.3.4 Part D: Error Codes

Version 1.2

Robin Heydon (section owner)	CSR
Roland Hellfajer	Infineon
Joel Linsky	Silicon Wave
John Mersh	TTPCom

This part was earlier included in the LMP and HCI functional Specifications.

2.3.5 Part E: Bluetooth Host Controller Interface Functional Specification

Version 1.2

Robin Heydon (section owner	CSR
Jennifer Bray	CSR
Alexander Thoukydides	CSR
Knud Dyring-Olsen	Digianswer/Motorola
Henrik Andersen	Digianswer/Motorola
Jan Åberg	Ericsson
Martin van der Zee	Ericsson
Don Liechty	Extended Systems
Kevin Marquess	Hyper Corp
Roland Hellfajer	Infineon
YC Maa	Integrated Programmable Communications, Inc.
Steve McGowan	Intel
Tod Sizer	Lucent Technologies
Tsuyoshi Okada	Matsushita Electric Industrial Co. Ltd
Andy Glass	Microsoft
Adrian Stephens	Mobilian
Len Ott	Motorola
Jürgen Schnitzler	Nokia
Thomas Müller	Nokia
Rene Tischer	Nokia
Rob Davies	Philips
Antonio Salloum	Philips
Joel Linsky	Silicon Wave
Terry Bourk	Silicon Wave
Len Ott	Socket Communications
Randy Erman	Taiyo Yuden
Yoshimitsu Shimojo	Toshiba
Toshiki Kizu	Toshiba
Katsuhiro Kinoshita	Toshiba
Sam Turner	TTPCom
John Mersh	TTPCom

Previous versions

Todor Cooklev	3Com Corporation
Toru Aihara	IBM Corporation
Chatschik Bisdikian	IBM Corporation
Nathan Lee	IBM Corporation
Akihiko Mizutani	IBM Corporation
Les Cline	Intel Corporation
Bailey Cross	Intel Corporation
Kris Fleming	Intel Corporation
Robert Hunter	Intel Corporation
Jon Inouye	Intel Corporation

Srikanth Kambhatla	Intel Corporation
Steve Lo	Intel Corporation
Vijay Suthar	Intel Corporation
Bruce P. Kraemer	Intersil
Greg Muchnik	Motorola, Inc.
David E. Cypher	NIST
Thomas Busse	Nokia Corporation
Julien Courthial	Nokia Corporation
Thomas Müller	Nokia Corporation
Dong Nguyen	Nokia Corporation
Jürgen Schnitzler	Nokia Corporation
Fujio Watanabe	Nokia Corporation
Christian Zechlin	Nokia Corporation
Johannes Elg	Telefonaktiebolaget LM Ericsson
Christian Johansson (Section Owner)	Telefonaktiebolaget LM Ericsson
Patrik Lundin	Telefonaktiebolaget LM Ericsson
Tobias Melin	Telefonaktiebolaget LM Ericsson
Mary A. DuVal	Texas Instruments
Thomas M. Siep	Texas Instruments
Masahiro Tada	Toshiba Corporation
John Mersh	TTPCom

2.3.6 Part F: Message Sequence Charts

Version 1.2

Tom Siep	Bluetooth SIG Inc.
Robin Heydon (section owner)	CSR
Simon Morris	CSR.
Jan Åberg	Ericsson
Christian Gehrmann	Ericsson
Joel Linsky	Silicon Wave
John Mersh	TTPCom

Previous versions

Todor Cooklev	3Com Corporation
Toru Aihara	IBM Corporation
Chatschik Bisdikian	IBM Corporation
Nathan Lee	IBM Corporation
Kris Fleming	Intel Corporation.
Greg Muchnik	Motorola, Inc.
David E. Cypher	NIST
Thomas Busse	Nokia Corporation
Dong Nguyen (Section Owner)	Nokia Corporation
Fujio Watanabe	Nokia Corporation
Christian Johansson	Telefonaktiebolaget LM Ericsson
Tobias Melin	Telefonaktiebolaget LM Ericsson
Mary A. DuVal	Texas Instruments

2.3.7 Part G: Sample Data

Version 1.2

Joel Linsky	Silicon Wave

Previous versions

Thomas Müller	Nokia Corporation
Thomas Sander	Nokia Corporation
Joakim Persson (Section Owner)	Telefonaktiebolaget LM Ericsson

2.3.8 Part H: Security Specification

Please see Part B (Section 2.3.2 on page 62). The Security specification was until recently a part of the Baseband specification.

2.4 [VOL 3] CORE SYSTEM PACKAGE, HOST

2.4.1 Part A: Logical Link Control and Adaptation Protocol Specification

Version 1.2

Tom Siep	Bluetooth SIG Inc.
Carsten Andersen (section owner	CSR
Jennifer Bray	CSR
Jan Åberg	Ericsson
Martin van der Zee	Ericsson
Sam Ravnborg	Ericsson
Stefan Agnani	Ericsson
Steve McGowan	Intel
Joby Lafky	Microsoft
Doron Holan	Microsoft
Andy Glass	Microsoft
Brian Redding	Motorola
Jürgen Schnitzler	Nokia
Thomas Müller	Nokia
Rob Davies	Philips
Terry Bourk	Silicon Wave
Michael Hasling	Tality

Previous versions

Jon Burgess	3Com Corporation
Paul Moran	3Com Corporation
Doug Kogan	Extended Systems
Kevin D. Marquess	Hyper Corporation
Toru Aihara	IBM Corporation
Chatschik Bisdikian	IBM Corporation
Kris Fleming	Intel Corporation
Uma Gadamsetty	Intel Corporation
Robert Hunter	Intel Corporation
Jon Inouye	Intel Corporation
Steve C. Lo	Intel Corporation
Chunrong Zhu	Intel Corporation
Sergey Solyanik	Microsoft Corporation
David E. Cypher	NIST
Nada Golmie	NIST
Thomas Busse	Nokia Corporation
Rauno Makinen	Nokia Corporation
Thomas Müller	Nokia Corporation
Petri Nykänen	Nokia Corporation
Peter Ollikainen	Nokia Corporation
Petri O. Nurminen	Nokia Corporation

Johannes Elg	Telefonaktiebolaget LM Ericsson
Jaap Haartsen	Telefonaktiebolaget LM Ericsson
Elco Nijboer	Telefonaktiebolaget LM Ericsson
Ingemar Nilsson	Telefonaktiebolaget LM Ericsson
Stefan Runesson	Telefonaktiebolaget LM Ericsson
Gerrit Slot	Telefonaktiebolaget LM Ericsson
Johan Sörensen	Telefonaktiebolaget LM Ericsson
Goran Svennarp	Telefonaktiebolaget LM Ericsson
Mary A. DuVal	Texas Instruments
Thomas M. Siep	Texas Instruments
Kinoshita Katsuhiro	Toshiba Corporation

2.4.2 Part B: Service Discovery Protocol (SDP)

Version 1.2

Previous versions

Ned Plasson	3Com Corporation
John Avery	Convergence
Jason Kronz	Convergence
Chatschik Bisdikian	IBM Corporation
Parviz Kermani	IBM Corporation
Brent Miller	IBM Corporation
Dick Osterman	IBM Corporation
Bob Pascoe	IBM Corporation
Jon Inouye	Intel Corporation
Srikanth Kambhatla	Intel Corporation
Jay Eaglstun	Motorola, Inc.
Dale Farnsworth (Section Owner)	Motorola, Inc.
Jean-Michel Rosso	Motorola, Inc.
Jan Grönholm	Nokia Corporation
Kati Rantala	Nokia Corporation
Thomas Müller	Nokia Corporation
Johannes Elg	Telefonaktiebolaget LM Ericsson
Kazuaki Iwamura	Toshiba Corporation

2.4.3 Part C Generic Access Profile

Version 1.2

Jennifer Bray	CSR
Alexander Thoukydides	CSR
Christian Gehrmann	Ericsson
Henrik Hedlund	Ericsson
Jan Åberg	Ericsson
Stefan Agnani	Ericsson
Thomas Müller	Nokia
Joel Linsky	Silicon Wave
Terry Bourk	Silicon Wave
Katsuhiro Kinoshita	Toshiba

Previous versions

Ken Morley	3Com Corporation
Chatschik Bisdikian	IBM Corporation
Jon Inouye	Intel Corporation
Brian Redding	Motorola, Inc.
David E. Cypher	NIST
Stephane Bouet	Nokia Corporation
Thomas Müller	Nokia Corporation
Martin Roter	Nokia Corporation
Johannes Elg	Telefonaktiebolaget LM Ericsson
Patric Lind (Section Owner)	Telefonaktiebolaget LM Ericsson
Erik Slotboom	Telefonaktiebolaget LM Ericsson
Johan Sörensen	Telefonaktiebolaget LM Ericsson

2.4.4 Part D: Test Support

Version 1.2

Emilio Mira Escartis	Cetecom
Robin Heydon	CSR
Jennifer Bray	CSR
Stefan Agnani (section owner)	Ericsson
Terry Bourk	Silicon Wave
Joel Linsky	Silicon Wave
Michael Hasling	Tality

Previous versions [Test Mode]

Jeffrey Schiffer	Intel Corporation
David E. Cypher	NIST
Daniel Bencak	Nokia Corporation
Arno Kefenbaum	Nokia Corporation
Thomas Müller (Section Owner)	Nokia Corporation

Roland Schmale	Nokia Corporation
Fujio Watanabe	Nokia Corporation
Stefan Agnani	Telefonaktiebolaget LM Ericsson
Mårten Mattsson	Telefonaktiebolaget LM Ericsson
Tobias Melin	Telefonaktiebolaget LM Ericsson
Lars Nord	Telefonaktiebolaget LM Ericsson
Fredrik Töörn	Telefonaktiebolaget LM Ericsson
John Mersh	TTPCom
Ayse Findikli	Zeevo, Inc.

Previous versions [Test Control Interface]

Mike Feldman	Motorola, Inc.
Thomas Müller	Nokia Corporation
Stefan Agnani (Section Owner)	Telefonaktiebolaget LM Ericsson
Mårten Mattsson	Telefonaktiebolaget LM Ericsson
Dan Sönnerstam	Telefonaktiebolaget LM Ericsson

Specification of the Bluetooth System

Wireless connections made easy

Architecture & Terminology Overview

Version 1.2
05 November 2003

Bluetooth®

Revision History

The Revision History is shown in the “Appendix” on page 53[vol. 0].

Contributors

The persons who contributed to this specification are listed in the , “Appendix” on page 53[vol. 0].

Web Site

This specification can also be found on the official Bluetooth website: http://www.bluetooth.com

Disclaimer and Copyright Notice

The copyright in these specifications is owned by the Promoter Members of Bluetooth SIG, Inc. (“Bluetooth SIG”). Use of these specifications and any related intellectual property (collectively, the “Specification”), is governed by the Promoters Membership Agreement among the Promoter Members and Bluetooth SIG (the “Promoters Agreement”), certain membership agreements between Bluetooth SIG and its Adopter and Associate Members (the “Membership Agreements”) and the Bluetooth Specification Early Adopters Agreements (“1.2 Early Adopters Agreements”) among Early Adopter members of the unincorporated Bluetooth special interest group and the Promoter Members (the “Early Adopters Agreement”). Certain rights and obligations of the Promoter Members under the Early Adopters Agreements have been assigned to Bluetooth SIG by the Promoter Members.

Use of the Specification by anyone who is not a member of Bluetooth SIG or a party to an Early Adopters Agreement (each such person or party, a “Member”), is prohibited. The legal rights and obligations of each Member are governed by their applicable Membership Agreement, Early Adopters Agreement or Promoters Agreement. No license, express or implied, by estoppel or otherwise, to any intellectual property rights are granted herein.

Any use of the Specification not in compliance with the terms of the applicable Membership Agreement, Early Adopters Agreement or Promoters Agreement is prohibited and any such prohibited use may result in termination of the applicable Membership Agreement or Early Adopters Agreement and other liability permitted by the applicable agreement or by applicable law to Bluetooth SIG or any of its members for patent, copyright and/or trademark infringement.

THE SPECIFICATION IS PROVIDED “AS IS” WITH NO WARRANTIES WHATSOEVER, INCLUDING ANY WARRANTY OF MERCHANTABILITY, NONINFRINGEMENT, FITNESS FOR ANY PARTICULAR PURPOSE, SATISFACTORY QUALITY, OR REASONABLE SKILL OR CARE, OR ANY WARRANTY ARISING OUT OF ANY COURSE OF DEALING, USAGE, TRADE PRACTICE, PROPOSAL, SPECIFICATION OR SAMPLE.

Each Member hereby acknowledges that products equipped with the Bluetooth® technology (“Bluetooth® Products”) may be subject to various regulatory controls under the laws and regulations of various governments worldwide. Such laws and regulatory controls may govern, among other things, the combination, operation, use, implementation and distribution of Bluetooth® Products. Examples of such laws and regulatory controls include, but are not limited to, airline regulatory controls, telecommunications regulations, technology transfer controls and health and safety regulations. Each Member is solely responsible for the compliance by their Bluetooth® Products with any such laws and regulations and for obtaining any and all required authorizations, permits, or licenses for their Bluetooth® Products related to such regulations within the applicable jurisdictions. Each Member acknowledges that nothing in the Specification provides any information or assistance in connection with securing such compliance, authorizations or licenses. NOTHING IN THE SPECIFICATION CREATES ANY WARRANTIES, EITHER EXPRESS OR IMPLIED, REGARDING SUCH LAWS OR REGULATIONS.

ALL LIABILITY, INCLUDING LIABILITY FOR INFRINGEMENT OF ANY INTELLECTUAL PROPERTY RIGHTS OR FOR NONCOMPLIANCE WITH LAWS, RELATING TO USE OF THE SPECIFICATION IS EXPRESSLY DISCLAIMED. BY USE OF THE SPECIFICATION, EACH MEMBER EXPRESSLY WAIVES ANY CLAIM AGAINST BLUETOOTH SIG AND ITS PROMOTER MEMBERS RELATED TO USE OF THE SPECIFICATION.

Bluetooth SIG reserves the right to adopt any changes or alterations to the Specification as it deems necessary or appropriate and to adopt a process for adding new Bluetooth® profiles after the release of the Specification.

Copyright © 1999, 2000, 2001, 2002, 2003

Agere Systems, Inc.,
Ericsson Technology Licensing, AB,
IBM Corporation,
Intel Corporation,
Microsoft Corporation,
Motorola, Inc.,
Nokia Corporation,
Toshiba Corporation

*Third-party brands and names are the property of their respective owners.

TABLE OF CONTENTS

Part A
ARCHITECTURE

Contents **11**

1 General Description **13**
1.1 Overview of Operation 13
1.2 Nomenclature 15

2 Core System Architecture **19**
2.1 Core Architectural Blocks 22
2.1.1 Channel manager 22
2.1.2 L2CAP resource manager 22
2.1.3 Device manager 23
2.1.4 Link manager 23
2.1.5 Baseband resource manager 23
2.1.6 Link controller 24
2.1.7 RF 24

3 Data Transport Architecture **25**
3.1 Core Traffic Bearers 26
3.1.1 Framed data traffic 27
3.1.2 Unframed data traffic 28
3.1.3 Reliability of traffic bearers 28
3.2 Transport Architecture Entities 30
3.2.1 Bluetooth generic packet structure 30
3.3 Physical Channels 32
3.3.1 Basic piconet channel 33
3.3.1.1 Overview 33
3.3.1.2 Characteristics 33
3.3.1.3 Topology 34
3.3.1.4 Supported layers 34
3.3.2 Adapted piconet channel 34
3.3.2.1 Overview 34
3.3.3 Inquiry scan channel 35
3.3.3.1 Overview 35
3.3.3.2 Characteristics 35
3.3.3.3 Topology 36
3.3.3.4 Supported layers 36

3.3.4 Page scan channel 36
3.3.4.1 Overview 36
3.3.4.2 Characteristics 36
3.3.4.3 Topology 37
3.3.4.4 Supported layers 37
3.4 Physical Links 37
3.4.1 Links supported by the basic and adapted piconet physical channel38
3.4.1.1 Active physical link 38
3.4.1.2 Parked physical link 38
3.4.2 Links supported by the scanning physical channels 39
3.5 Logical Links and Logical Transports 39
3.5.1 Casting 41
3.5.2 Scheduling and acknowledgement scheme 41
3.5.3 Class of data 42
3.5.4 Asynchronous connection-oriented (ACL) 42
3.5.5 Synchronous connection-oriented (SCO) 43
3.5.6 Extended synchronous connection-oriented (eSCO) 44
3.5.7 Active slave broadcast (ASB) 44
3.5.8 Parked slave broadcast (PSB) 45
3.5.9 Logical links 46
3.5.10 ACL Control Logical Link (ACL-C) 47
3.5.11 User Asynchronous/Isochronous Logical Link (ACL-U) 47
3.5.12 User Synchronous/Extended Synchronous Logical Links (SCO-S/eSCO-S)47
3.6 L2CAP Channels 48
4 Communication Topology 49
4.1 Piconet Topology 49
4.2 Operational Procedures and Modes 51
4.2.1 Inquiry (Discovering) Procedure 51
4.2.2 Paging (Connecting) Procedure 52
4.2.3 Connected mode 52
4.2.4 Hold mode 53
4.2.5 Sniff mode 53
4.2.6 Parked state 54
4.2.7 Role switch procedure 54

Part B
ACRONYMS & ABBREVIATIONS

1 List of Acronyms and Abbreviations.....57
2 Abbreviations of the Specification Names 65

Part C
CHANGES FROM BLUETOOTH SPECIFICATION V 1.1

Contents 69
1 New Features 71
2 Changes in Wording 73
2.1 IEEE Language Update 73
2.1.1 Shall 74
2.1.2 Must.....74
2.1.3 Will.....74
2.1.4 Should 74
2.1.5 May.....75
2.1.6 Can.....75
2.2 Nomenclature Changes 75
3 Structure Changes 77
4 Deprecated Specifications 79
4.1 Deprecated Features 79
4.2 Deprecated Profiles.....79

Architecture

1.2

CONTENTS

1 General Description 13
1.1 Overview of Operation 13
1.2 Nomenclature 15
2 Core System Architecture 19
2.1 Core Architectural Blocks 22
2.1.1 Channel manager 22
2.1.2 L2CAP resource manager 22
2.1.3 Device manager 23
2.1.4 Link manager 23
2.1.5 Baseband resource manager 23
2.1.6 Link controller 24
2.1.7 RF 24
3 Data Transport Architecture 25
3.1 Core Traffic Bearers 26
3.1.1 Framed data traffic 27
3.1.2 Unframed data traffic 28
3.1.3 Reliability of traffic bearers 28
3.2 Transport Architecture Entities 30
3.2.1 Bluetooth generic packet structure 30
3.3 Physical Channels 32
3.3.1 Basic piconet channel 33
3.3.1.1 Overview 33
3.3.1.2 Characteristics 33
3.3.1.3 Topology 34
3.3.1.4 Supported layers 34
3.3.2 Adapted piconet channel 34
3.3.2.1 Overview 34
3.3.3 Inquiry scan channel 35
3.3.3.1 Overview 35
3.3.3.2 Characteristics 35
3.3.3.3 Topology 36
3.3.3.4 Supported layers 36
3.3.4 Page scan channel 36
3.3.4.1 Overview 36
3.3.4.2 Characteristics 36
3.3.4.3 Topology 37
3.3.4.4 Supported layers 37

3.4 Physical Links 37
3.4.1 Links supported by the basic and adapted piconet physical channel 38
3.4.1.1 Active physical link 38
3.4.1.2 Parked physical link 38
3.4.2 Links supported by the scanning physical channels 39
3.5 Logical Links and Logical Transports 39
3.5.1 Casting 41
3.5.2 Scheduling and acknowledgement scheme 41
3.5.3 Class of data 42
3.5.4 Asynchronous connection-oriented (ACL) 42
3.5.5 Synchronous connection-oriented (SCO) 43
3.5.6 Extended synchronous connection-oriented (eSCO) 44
3.5.7 Active slave broadcast (ASB) 44
3.5.8 Parked slave broadcast (PSB) 45
3.5.9 Logical links 46
3.5.10 ACL Control Logical Link (ACL-C) 47
3.5.11 User Asynchronous/Isochronous Logical Link (ACL-U) 47
3.5.12 User Synchronous/Extended Synchronous Logical Links (SCO-S/eSCO-S) 47
3.6 L2CAP Channels 48

4 Communication Topology 49
4.1 Piconet Topology 49
4.2 Operational Procedures and Modes 51
4.2.1 Inquiry (Discovering) Procedure 51
4.2.2 Paging (Connecting) Procedure 52
4.2.3 Connected mode 52
4.2.4 Hold mode 53
4.2.5 Sniff mode 53
4.2.6 Parked state 54
4.2.7 Role switch procedure 54

1 GENERAL DESCRIPTION

Bluetooth wireless technology is a short-range communications system intended to replace the cable(s) connecting portable and/or fixed electronic devices. Key features are robustness, low power, and low cost. Many features of the core specification are optional, allowing product differentiation.

The Bluetooth core system consists of an RF transceiver, baseband, and protocol stack. The system offers services that enable the connection of devices and the exchange of a variety of classes of data between these devices.

This chapter of the specification provides an overview of the Bluetooth system architecture, communication topologies and data transport features. The text in this chapter of the specification should be treated as informational and used as a background and for context-setting.

1.1 OVERVIEW OF OPERATION

The Bluetooth RF (physical layer) operates in the unlicensed ISM band at 2.4 GHz. The system employs a frequency hop transceiver to combat interference and fading and provides many FHSS carriers. RF operation uses a shaped, binary FM modulation to minimize transceiver complexity. The symbol rate is 1 Megasymbol per second (Ms/s) supporting the bit rate of 1 Megabit per second (Mb/s).

During typical operation a physical radio channel is shared by a group of devices that are synchronized to a common clock and frequency hopping pattern. One device provides the synchronization reference and is known as the master. All other devices are known as slaves. A group of devices synchronized in this fashion form a piconet. This is the fundamental form of communication in the Bluetooth wireless technology.

Devices in a piconet use a specific frequency hopping pattern, which is algorithmically determined by certain fields in the Bluetooth address and clock of the master. The basic hopping pattern is a pseudo-random ordering of the 79 frequencies in the ISM band. The hopping pattern may be adapted to exclude a portion of the frequencies that are used by interferring devices. The adaptive hopping technique improves Bluetooth co-existence with static (non-hopping) ISM systems when these are co-located.

The physical channel is sub-divided into time units known as slots. Data is transmitted between Bluetooth devices in packets, that are positioned in these slots. When circumstances permit, a number of consecutive slots may be allocated to a single packet. Frequency hopping takes place between the transmission or reception of packets. Bluetooth technology provides the effect of full duplex transmission through the use of a Time-Division Duplex (TDD) scheme.

Above the physical channel there is a layering of links and channels and associated control protocols. The hierarchy of channels and links from the physical channel upwards is physical channel, physical link, logical transport, logical link and L2CAP channel. These are discussed in more detail in Section 3.3 on page 32 - Section 3.6 on page 48 but are introduced here to aid the understanding of the remainder of this section.

Within a physical channel, a physical link is formed between any two devices that transmit packets in either direction between them. In a piconet physical channel there are restrictions on which devices may form a physical link. There is a physical link between each slave and the master. Physical links are not formed directly between the slaves in a piconet.

The physical link is used as a transport for one or more logical links that support unicast synchronous, asynchronous and isochronous traffic, and broadcast traffic. Traffic on logical links is multiplexed onto the physical link by occupying slots assigned by a scheduling function in the resource manager.

A control protocol for the baseband and physical layers is carried over logical links in addition to user data. This is the link manager protocol (LMP). Devices that are active in a piconet have a default asynchronous connection-oriented logical transport that is used to transport the LMP protocol signalling. For historical reasons this is known as the ACL logical transport. The default ACL logical transport is the one that is created whenever a device joins a piconet. Additional logical transports may be created to transport synchronous data streams when this is required.

The Link Manager function uses LMP to control the operation of devices in the piconet and provide services to manage the lower architectural layers (radio layer and baseband layer). The LMP protocol is only carried on the default ACL logical transport and the default broadcast logical transport.

Above the baseband layer the L2CAP layer provides a channel-based abstraction to applications and services. It carries out segmentation and reassembly of application data and multiplexing and de-multiplexing of multiple channels over a shared logical link. L2CAP has a protocol control channel that is carried over the default ACL logical transport. Application data submitted to the L2CAP protocol may be carried on any logical link that supports the L2CAP protocol.

1.2 NOMENCLATURE

Where the following terms appear in the specification they have the meaning given in Table 1.1 on page 15.

Ad Hoc Network	A network typically created in a spontaneous manner. An ad hoc network requires no formal infrastructure and is limited in temporal and spatial extent.
Active Slave Broadcast (ASB)	The Active Slave Broadcast logical transport that is used to transport L2CAP user traffic to all active devices in the piconet. See Section 3.5.7 on page 44
Beacon Train	A pattern of reserved slots within a basic or adapted piconet physical channel. Transmissions starting in these slots are used to resynchronize parked devices.
Bluetooth	Bluetooth is a wireless communication link, operating in the unlicensed ISM band at 2.4 GHz using a frequency hopping transceiver. It allows real-time AV and data communications between Bluetooth Hosts. The link protocol is based on time slots.
Bluetooth Baseband	The part of the Bluetooth system that specifies or implements the medium access and physical layer procedures to support the exchange of real-time voice, data information streams, and ad hoc networking between Bluetooth Devices.
Bluetooth Clock	A 28 bit clock internal to a Bluetooth controller sub-system that ticks every 312.5µs. The value of this clock defines the slot numbering and timing in the various physical channels.
Bluetooth Controller	A sub-system containing the Bluetooth RF, baseband, resource controller, link manager, device manager and a Bluetooth HCI.
Bluetooth Device	A Bluetooth Device is a device that is capable of short-range wireless communications using the Bluetooth system.
Bluetooth Device Address	A 48 bit address used to identify each Bluetooth device.
BD_ADDR	The Bluetooth Device Address, BD_ADDR, is used to identify a Bluetooth device.
Bluetooth HCI	The Bluetooth HCI provides a command interface to the baseband controller and link manager and access to hardware status and control registers. This interface provides a uniform method of accessing the Bluetooth baseband capabilities.

Table 1.1: Nomenclature.

Bluetooth Host	A Bluetooth Host is a computing device, peripheral, cellular telephone, access point to PSTN network or LAN, etc. A Bluetooth Host attached to a Bluetooth Controller may communicate with other Bluetooth Hosts attached to their Bluetooth Controllers as well.
Channel	Either a physical channel or an L2CAP channel, depending on the context.
Connect (to service)	The establishment of a connection to a service. If not already done, this also includes establishment of a physical link, logical transport, logical link and L2CAP channel.
Connectable device	A Bluetooth device in range that periodically listens on its page scan physical channel and will respond to a page on that channel.
Connected devices	Two Bluetooth devices in the same piconet and with a physical link between them.
Connecting	A phase in the communication between devices when a connection between them is being established. (Connecting phase follows after the link establishment phase is completed.)
Connection	A connection between two peer applications or higher layer protocols mapped onto an L2CAP channel.
Connection establishment	A procedure for creating a connection mapped onto a channel.
coverage area	The area where two Bluetooth devices can exchange messages with acceptable quality and performance.
Creation of a secure connection	A procedure of establishing a connection, including authentication and encryption.
Creation of a trusted relationship	A procedure where the remote device is marked as a trusted device. This includes storing a common link key for future authentication and pairing (if the link key is not available).
Device discovery	A procedure for retrieving the Bluetooth device address, clock, class-of-device field and used page scan mode from discoverable devices.
Discoverable device	A Bluetooth device in range that periodically listens on an inquiry scan physical channel and will respond to an inquiry on that channel. Discoverable device are normally also connectable.
Inquiring device	A Bluetooth device that is carrying out the inquiry procedure.
Inquiry	A procedure where a Bluetooth device transmits inquiry messages and listens for responses in order to discover the other Bluetooth devices that are within the coverage area.

Table 1.1: Nomenclature.

Inquiry scan	A procedure where a Bluetooth device listens for inquiry messages received on its inquiry scan physical channel.
Isochronous data	Information in a stream where each information entity in the stream is bound by a time relationship to previous and successive entities.
Known device	A Bluetooth device for which at least the BD_ADDR is stored.
L2CAP Channel	A logical connection on L2CAP level between two devices serving a single application or higher layer protocol.
L2CAP Channel establishment	A procedure for establishing a logical connection on L2CAP level.
Link establishment	A procedure for establishing the default ACL link and hierarchy of links and channels between devices.
Link	Shorthand for a logical link.
Link key	A secret key that is known by two devices and is used in order to authenticate each device to the other
LMP authentication	An LMP level procedure for verifying the identity of a remote device.
LMP pairing	A procedure that authenticates two devices and creates a common link key that can be used as a basis for a trusted relationship or a (single) secure connection.
Logical Channel	Identical to an L2CAP channel, but deprecated due to an alternative meaning in Bluetooth 1.1
Logical link	The lowest architectural level used to offer independent data transport services to clients of the Bluetooth system.
Logical transport	Used in Bluetooth to represent commonality between different logical links due to shared acknowledgement protocol and link identifiers.
Name discovery	A procedure for retrieving the user-friendly name (the Bluetooth device name) of a connectable device.
Packet	Format of aggregated bits that are transmitted on a physical channel.
Page	The initial phase of the connection procedure where a device transmits a train of page messages until a response is received from the target device or a timeout occurs.
Page scan	A procedure where a device listens for page messages received on its page scan physical channel.
Paging device	A Bluetooth device that is carrying out the page procedure.
Paired device	A Bluetooth device with which a link key has been exchanged (either before connection establishment was requested or during connecting phase).

Table 1.1: Nomenclature.

Parked device	A device operating in a basic mode piconet that is synchronized to the master but has given up its default ACL logical transport.
Physical Channel	Characterised by synchronized occupancy of a sequence of RF carriers by one or more devices. A number of physical channel types exist with characteristics defined for their different purposes.
Physical Link	A Baseband-level connection between two devices established using paging.
Piconet	A collection of devices occupying a shared physical channel where one of the devices is the Piconet Master and the remaining devices are connected to it.
Piconet Physical Channel	A Channel that is divided into time slots in which each slot is related to an RF hop frequency. Consecutive hops normally correspond to different RF hop frequencies and occur at a standard hop rate of 1600 hops/s. These consecutive hops follow a pseudo-random hopping sequence, hopping through a 79 RF channel set.
Piconet Master	The device in a piconet whose Bluetooth Clock and Bluetooth Device Address are used to define the piconet physical channel characteristics.
Piconet Slave	Any device in a piconet that is not the Piconet Master, but is connected to the Piconet Master.
PIN	A user-friendly number that can be used to authenticate connections to a device before paring has taken place.
PMP	A Participant in Multiple Piconets. A device that is concurrently a member of more than one piconet, which it achieves using time division multiplexing (TDM) to interleave its activity on each piconet physical channel.
The Parked Slave Broadcast (PSB)	The Parked Slave Broadcast logical transport that is used for communications between the master and parked devices. Section 3.5.8 on page 45.
Scatternet	Two or more piconets that include one or more devices acting as PMPs.
Service Layer Protocol	A protocol that uses an L2CAP channel for transporting PDUs.
Service discovery	Procedures for querying and browsing for services offered by or through another Bluetooth device.
Silent device	A Bluetooth device appears as silent to a remote device if it does not respond to inquiries made by the remote device.
Unknown device	A Bluetooth device for which no information (Bluetooth Device Address, link key or other) is stored.

Table 1.1: Nomenclature.

2 CORE SYSTEM ARCHITECTURE

The Bluetooth core system covers the four lowest layers and associated protocols defined by the Bluetooth specification as well as one common service layer protocol, the Service Discovery Protocol (SDP) and the overall profile requirements are specified in the Generic Access Profile (GAP). A complete Bluetooth application requires a number of additional service and higher layer protocols that are defined in the Bluetooth specification, but are not described here. The core system architecture is shown in Figure 2.1 on page 19 except for SDP that is not shown for clarity.

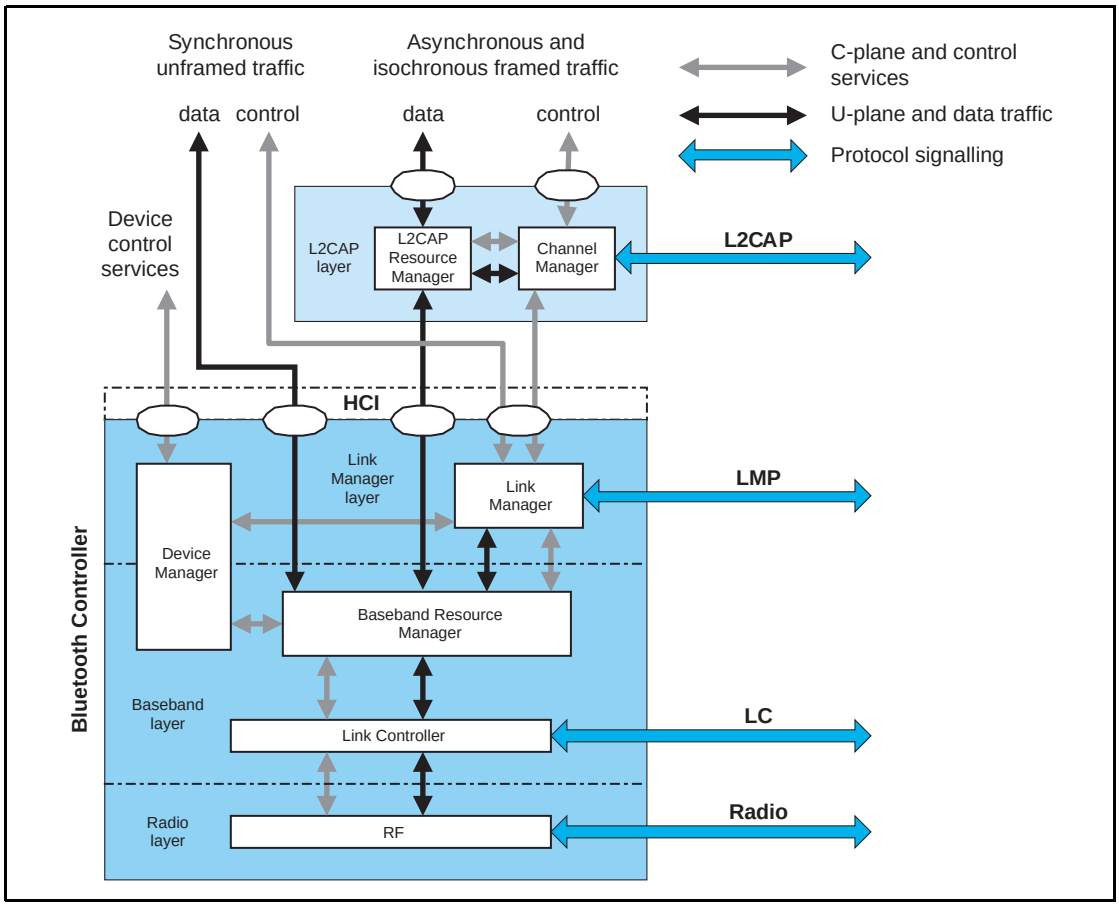

Figure 2.1: Bluetooth core system architecture

Figure 2.1 on page 19 shows the four lowest layers, each with its associated communication protocol. The lowest three layers are sometimes grouped into a subsystem known as the Bluetooth controller. This is a common implementation involving a standard physical communications interface between the Bluetooth controller and remainder of the Bluetooth system including the L2CAP, service and higher layers (known as the Bluetooth host.) Although this interface is optional the architecture is designed to allow for its existence and characteristics. The Bluetooth specification enables inter-operability between independent Bluetooth systems by defining the protocol messages exchanged between equivalent layers, and also inter-operability between independent

Bluetooth sub-systems by defining a common interface between Bluetooth controllers and Bluetooth hosts.

A number of functional blocks are shown and the path of services and data between these. The functional blocks shown in the diagram are informative; in general the Bluetooth specification does not define the details of implementations except where this is required for inter-operability. Thus the functional blocks in Figure 2.1 on page 19 are shown in order to aid description of the system behaviour. An implementation may be different from the system shown in Figure 2.1 on page 19.

Standard interactions are defined for all inter-device operation, where Bluetooth devices exchange protocol signalling according to the Bluetooth specification. The Bluetooth core system protocols are the Radio (RF) protocol, Link Control (LC) protocol, Link Manager (LM) protocol and Logical Link Control and Adaptation protocol (L2CAP), all of that are fully defined in subsequent parts of the Bluetooth specification. In addition the Service Discovery Protocol (SDP) is a service layer protocol required by all Bluetooth applications.

The Bluetooth core system offers services through a number of service access points that are shown in the diagram as ellipses. These services consist of the basic primitives that control the Bluetooth core system. The services can be split into three types. There are device control services that modify the behaviour and modes of a Bluetooth device, transport control services that create, modify and release traffic bearers (channels and links), and data services that are used to submit data for transmission over traffic bearers. It is common to consider the first two as belonging to the C-plane and the last as belonging to the U-plane.

A service interface to the Bluetooth controller sub-system is defined such that the Bluetooth controller may be considered a standard part. In this configuration the Bluetooth controller operates the lowest three layers and the L2CAP layer is contained with the rest of the Bluetooth application in a host system. The standard interface is called the Host to Controller Interface (HCI) and its service access points are represented by the ellipses on the upper edge of the Bluetooth controller sub-system in Figure 2.1 on page 19. Implementation of this standard service interface is optional.

As the Bluetooth architecture is defined with the possibility of separate host and controller communicating through an HCI, a number of general assumptions are made. The Bluetooth controller is assumed to have limited data buffering capabilities in comparison with the host. Therefore the L2CAP layer is expected to carry out some simple resource management when submitting L2CAP PDUs to the controller for transport to a peer device. This includes segmentation of L2CAP SDUs into more manageable PDUs and then the fragmentation of PDUs into start and continuation packets of a size suitable for the controller buffers, and management of the use of controller buffers to ensure availability for channels with Quality of Service (QoS) commitments.

The Baseband layer provides the basic ARQ protocol in Bluetooth. The L2CAP layer can optionally provide a further error detection and retransmission to the L2CAP PDUs. This feature is recommended for applications with requirements for a low probability of undetected errors in the user data. A further optional feature of L2CAP is a window-based flow control that can be used to manage buffer allocation in the receiving device. Both of these optional features augment the QoS performance in certain scenarios.

Although these assumptions may not be required for embedded Bluetooth implementations that combine all layers in a single system, the general architectural and QoS models are defined with these assumptions in mind, in effect a lowest common denominator.

Automated conformance testing of implementations of the Bluetooth core system is required. This is achieved by allowing the tester to control the implementation through the RF interface, which is common to all Bluetooth systems, and through the Test Control Interface (TCI), which is only required for conformance testing.

The tester uses exchanges with the Implementation Under Test (IUT) through the RF interface to ensure the correct responses to requests from remote devices. The tester controls the IUT through the TCI to cause the IUT to originate exchanges through the RF interface so that these can also be verified as conformant.

The TCI uses a different command-set (service interface) for the testing of each architectural layer and protocol. A subset of the HCI command-set is used as the TCI service interface for each of the layers and protocols within the Bluetooth Controller subsystem. A separate service interface is used for testing the L2CAP layer and protocol. As an L2CAP service interface is not defined in the Bluetooth core specification it is defined separately in the Test Control Interface specification. Implementation of the L2CAP service interface is only required for conformance testing.

2.1 CORE ARCHITECTURAL BLOCKS

This section describes the function and responsibility of each of the blocks shown in Figure 2.1 on page 19. An implementation is not required to follow the architecture described above, though every implementation shall conform to the protocol specifications described in subsequent parts of the Bluetooth specification, and shall implement the behavioural aspects of the system outlined below and specified in subsequent parts of the Bluetooth specification.

2.1.1 Channel manager

The channel manager is responsible for creating, managing and destroying L2CAP channels for the transport of service protocols and application data streams. The channel manager uses the L2CAP protocol to interact with a channel manager on a remote (peer) device to create these L2CAP channels and connect their endpoints to the appropriate entities. The channel manager interacts with its local link manager to create new logical links (if necessary) and to configure these links to provide the required quality of service for the type of data being transported.

2.1.2 L2CAP resource manager

The L2CAP resource manager block is responsible for managing the ordering of submission of PDU fragments to the baseband and some relative scheduling between channels to ensure that L2CAP channels with QoS commitments are not denied access to the physical channel due to Bluetooth controller resource exhaustion. This is required because the architectural model does not assume that the Bluetooth controller has limitless buffering, or that the HCI is a pipe of infinite bandwidth.

L2CAP Resource Managers may also carry out traffic conformance policing to ensure that applications are submitting L2CAP SDUs within the bounds of their negotiated QoS settings. The general Bluetooth data transport model assumes well-behaved applications, and does not define how an implementation is expected to deal with this problem.

2.1.3 Device manager

The device manager is the functional block in the baseband that controls the general behaviour of the Bluetooth device. It is responsible for all operation of the Bluetooth system that is not directly related to data transport, such as inquiring for the presence of other nearby Bluetooth devices, connecting to other Bluetooth devices, or making the local Bluetooth device discoverable or connectable by other devices.

The device manager requests access to the transport medium from the baseband resource controller in order to carry out its functions.

The device manager also controls local device behaviour implied by a number of the HCI commands, such as managing the device local name, any stored link keys, and other functionality.

2.1.4 Link manager

The link manager is responsible for the creation, modification and release of logical links (and, if required, their associated logical transports), as well as the update of parameters related to physical links between devices. The link manager achieves this by communicating with the link manager in remote Bluetooth devices using the Link Management Protocol (LMP.)

The LM protocol allows the creation of new logical links and logical transports between devices when required, as well as the general control of link and transport attributes such as the enabling of encryption on the logical transport, the adapting of transmit power on the physical link, or the adjustment of QoS settings for a logical link.

2.1.5 Baseband resource manager

The baseband resource manager is responsible for all access to the radio medium. It has two main functions. At its heart is a scheduler that grants time on the physical channels to all of the entities that have negotiated an access contract. The other main function is to negotiate access contracts with these entities. An access contract is effectively a commitment to deliver a certain QoS that is required in order to provide a user application with an expected performance.

The access contract and scheduling function must take account of any behaviour that requires use of the Bluetooth radio. This includes (for example) the normal exchange of data between connected devices over logical links, and logical transports, as well as the use of the radio medium to carry out inquiries, make connections, be discoverable or connectable, or to take readings from unused carriers during the use of adaptive frequency hopping mode.

In some cases the scheduling of a logical link results in changing to a different physical channel from the one that was previously used. This may be (for example) due to involvement in scatternet, a periodic inquiry function, or page

scanning. When the physical channels are not time slot aligned, then the resource manager also accounts for the realignment time between slots on the original physical channel and slots on the new physical channel. In some cases the slots will be naturally aligned due to the same device clock being used as a reference for both physical channels.

2.1.6 Link controller

The link controller is responsible for the encoding and decoding of Bluetooth packets from the data payload and parameters related to the physical channel, logical transport and logical link.

The link controller carries out the link control protocol signalling (in close conjunction with the scheduling function of the resource manager), which is used to communicate flow control and acknowledgement and retransmission request signals. The interpretation of these signals is a characteristic of the logical transport associated with the baseband packet. Interpretation and control of the link control signalling is normally associated with the resource manager's scheduler.

2.1.7 RF

The RF block is responsible for transmitting and receiving packets of information on the physical channel. A control path between the baseband and the RF block allows the baseband block to control the timing and frequency carrier of the RF block. The RF block transforms a stream of data to and from the physical channel and the baseband into required formats.

3 DATA TRANSPORT ARCHITECTURE

The Bluetooth data transport system follows a layered architecture. This description of the Bluetooth system describes the Bluetooth core transport layers up to and including L2CAP channels. All Bluetooth operational modes follow the same generic transport architecture, which is shown in Figure 3.1 on page 25.

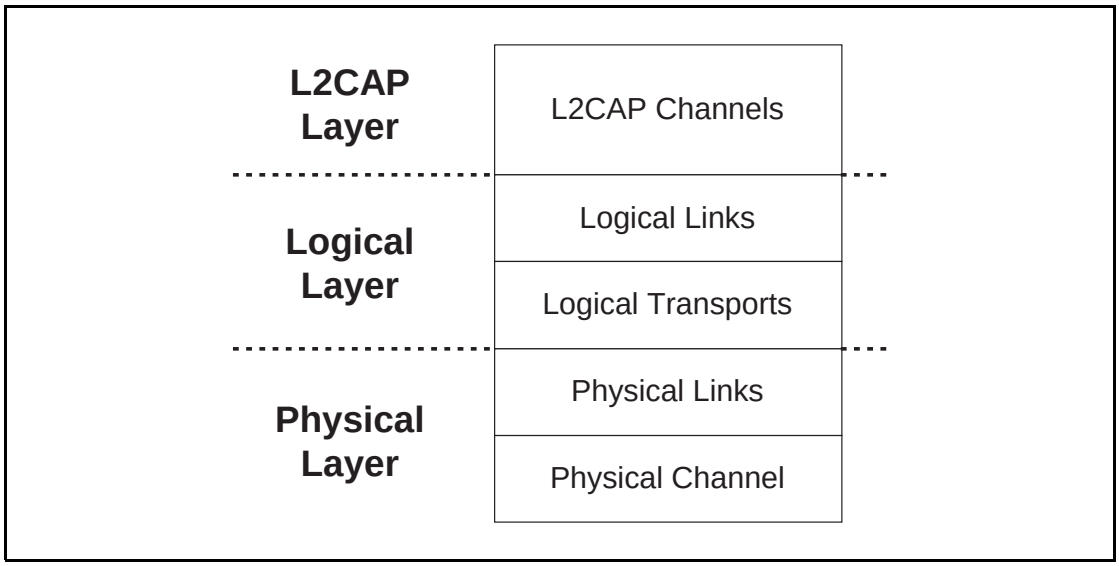

Figure 3.1: Bluetooth generic data transport architecture

For efficiency and legacy reasons, the Bluetooth transport architecture includes a sub-division of the logical layer, distinguishing between logical links and logical transports. This sub-division provides a general (and commonly understood) concept of a logical link that provides an independent transport between two or more devices. The logical transport sub-layer is required to describe the inter-dependence between some of the logical link types (mainly for reasons of legacy behaviour.)

The Bluetooth 1.1 specification described the ACL and SCO links as physical links. With the addition of Extended SCO (eSCO) and for future expansion it is better to consider these as logical transport types, which more accurately encapsulates their purpose. However, they are not as independent as might be desired, due to their shared use of resources such as the LT_ADDR and acknowledgement/repeat request (ARQ) scheme. Hence the architecture is incapable of representing these logical transports with a single transport layer. The additional logical transport layer goes some way towards describing this behaviour.

3.1 CORE TRAFFIC BEARERS

The Bluetooth core system provides a number of standard traffic bearers for the transport of service protocol and application data. These are shown in Figure 3.2 on page 26 below (for ease of representation this is shown with higher layers to the left and lower layers to the right).

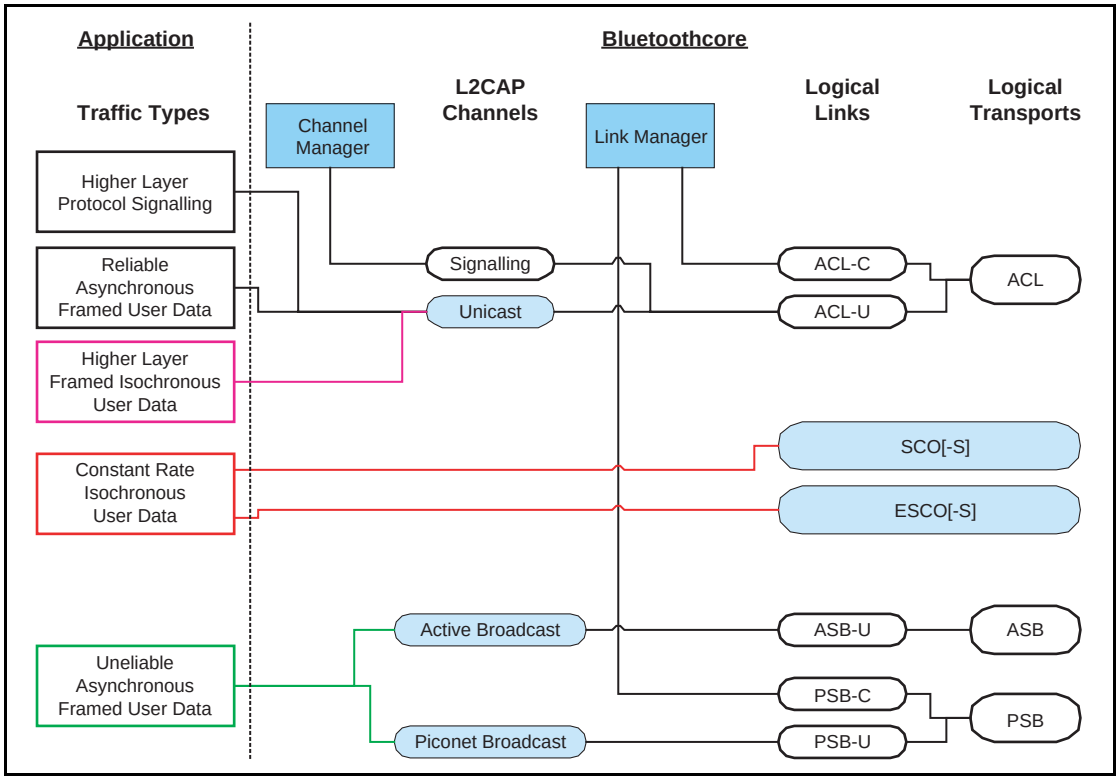

Figure 3.2: Bluetooth traffic bearers

The core traffic bearers that are available to applications are shown in Figure 3.2 on page 26 as the shaded rounded rectangles. The architectural layers that are defined to provide these services are described in Section 2 on page 19. A number of data traffic types are shown on the left of the diagram linked to the traffic bearers that are typically suitable for transporting that type of data traffic.

The logical links are named using the names of the associated logical transport and a suffix that indicates the type of data that is transported. (C for control links carrying LMP messages, U for L2CAP links carrying user data (L2CAP PDUs) and S for stream links carrying unformatted synchronous or isochronous data.) It is common for the suffix to be removed from the logical link without introducing ambiguity, thus a reference to the default ACL logical transport can be resolved to mean the ACL-C logical link in cases where the LMP protocol is being discussed, or the ACL-U logical link when the L2CAP layer is being discussed.

The mapping of application traffic types to Bluetooth core traffic bearers in Figure 3.2 on page 26 is based on matching the traffic characteristics with the

bearer characteristics. It is recommended to use these mappings as they provide the most natural and efficient method of transporting the data with its given characteristics.

However, an application (or an implementation of the Bluetooth core system) may choose to use a different traffic bearer, or a different mapping to achieve a similar result. For example, in a piconet with only one slave, the master may choose to transport L2CAP broadcasts over the ACL-U logical link rather than over the ASB-U or PSB-U logical links. This will probably be more efficient in terms of bandwidth (if the physical channel quality is not too degraded.) Use of alternative transport paths to those in Figure 3.2 on page 26 is only acceptable if the characteristics of the application traffic type are preserved.

Figure 3.2 on page 26 shows a number of application traffic types. These are used to classify the types of data that may be submitted to the Bluetooth core system. The original data traffic type may not be the same as the type that is submitted to the Bluetooth core system if an intervening process modifies it. For example, video data is generated at a constant rate but an intermediate coding process may alter this to variable rate, e.g. by MPEG4 encoding. For the purposes of the Bluetooth core system, only the characteristic of the submitted data is of interest.

3.1.1 Framed data traffic

The L2CAP layer services provide a frame-oriented transport for asynchronous and isochronous user data. The application submits data to this service in variable-sized frames (up to a negotiated maximum for the channel) and these frames are delivered in the same form to the corresponding application on the remote device. There is no requirement for the application to insert additional framing information into the data, although it may do so if this is required (such framing is invisible to the Bluetooth core system.)

Connection-oriented L2CAP channels may be created for transport of unicast (point-to-point) data between two Bluetooth devices. A connectionless L2CAP channel exists for broadcasting data. In the case of piconet topologies the master device is always the source of broadcast data and the slave device(s) are the recipients. Traffic on the broadcast L2CAP channel is uni-directional. Unicast L2CAP channels may be uni-directional or bi-directional.

L2CAP channels have an associated QoS setting that defines constraints on the delivery of the frames of data. These QoS settings may be used to indicate (for example) that the data is isochronous, and therefore has a limited lifetime after which it becomes invalid, or that the data should be delivered within a given time period, or that the data is reliable and should be delivered without error, however long this takes.

The L2CAP channel manager is responsible for arranging to transport the L2CAP channel data frames on an appropriate baseband logical link, possibly multiplexing this onto the baseband logical link with other L2CAP channels with similar characteristics.

3.1.2 Unframed data traffic

If the application does not require delivery of data in frames, possibly because it includes in-stream framing, or because the data is a pure stream, then it may avoid the use of L2CAP channels and make direct use of a baseband logical link.

The Bluetooth core system supports the direct transport of application data that is isochronous and of a constant rate (either bit-rate, or frame-rate for pre-framed data), using a SCO-S or eSCO-S logical link. These logical links reserve physical channel bandwidth and provide a constant rate transport locked to the piconet clock. Data is transported in fixed size packets at fixed intervals with both of these parameters negotiated during channel establishment. eSCO links provide a greater choice of bit-rates and also provide greater reliability by using limited retransmission in case of error. SCO and eSCO logical transports do not support multiplexed logical links or any further layering within the Bluetooth core. An application may choose to layer a number of streams within the submitted SCO/eSCO stream, provided that the submitted stream is, or has the appearance of being, a constant rate stream.

The application chooses the most appropriate type of logical link from those available at the baseband, and creates and configures it to transport the data stream, and releases it when completed. (The application will normally also use a framed L2CAP unicast channel to transport its C-plane information to the peer application on the remote device.)

If the application data is isochronous and of a variable rate, then this may only be carried by the L2CAP unicast channel, and hence will be treated as framed data.

3.1.3 Reliability of traffic bearers

Bluetooth is a wireless communications system. In poor RF environments, this system should be considered inherently unreliable. To counteract this the system provides levels of protection at each layer. The baseband packet header uses forward error correcting (FEC) coding to allow error correction by the receiver and a header error check (HEC) to detect errors remaining after correction. Certain Baseband packet types include FEC for the payload. Furthermore, some Baseband packet types include a cyclic redundancy error check (CRC).

On ACL logical transports the results of the error detection algorithm are used to drive a simple acknowledgement/repeat request (ARQ) protocol. This provides an enhanced reliability by re-transmitting packets that do not pass the receiver’s error checking algorithm. It is possible to modify this scheme to support latency-sensitive packets by discarding an unsuccessfully transmitted packet at the transmitter if the packet’s useful life has expired. eSCO links use a modified version of this scheme to improve reliability by allowing a limited number of retransmissions.

The resulting reliability gained by this ARQ scheme is only as dependable as the ability of the HEC and CRC codes to detect errors. In most cases this is sufficient, however it has been shown that for the longer packet types the probability of an undetected error is too high to support typical applications, especially those with a large amount of data being transferred.

The L2CAP layer provides an additional level of error control that is designed to detect the occasional undetected errors in the baseband layer and request retransmission of the affected data. This provides the level of reliability required by typical Bluetooth applications.

Broadcast links have no feedback route, and are unable to use the ARQ scheme (although the receiver is still able to detect errors in received packets.) Instead each packet is transmitted several times in the hope that the receiver is able to receive at least one of the copies successfully. Despite this approach there are still no guarantees of successful receipt, and so these links are considered unreliable.

In summary, if a link or channel is characterised as reliable this means that the receiver is capable of detecting errors in received packets and requesting retransmission until the errors are removed. Due to the error detection system used some residual (undetected) errors may still remain in the received data. For L2CAP channels the level of these is comparable to other communication systems, although for logical links the residual error level is somewhat higher.

The transmitter may remove packets from the transmit queue such that the receiver does not receive all the packets in the sequence. If this happens detection of the missing packets is delegated to the L2CAP layer.

On an unreliable link the receiver is capable of detecting errors in received packets but cannot request retransmission. The packets passed on by the receiver may be without error, but there is no guarantee that all packets in the sequence are received. Hence the link is considered fundamentally unreliable. There are limited uses for such links, and these uses are normally dependent on the continuous repetition of data from the higher layers while it is valid.

Stream links have a reliability characteristic somewhere between a reliable and an unreliable link, depending on the current operating conditions.

3.2 TRANSPORT ARCHITECTURE ENTITIES

The Bluetooth transport architecture entities are shown in Figure 3.3 on page 30 and are described from the lowest layer upwards in the subsequent sections.

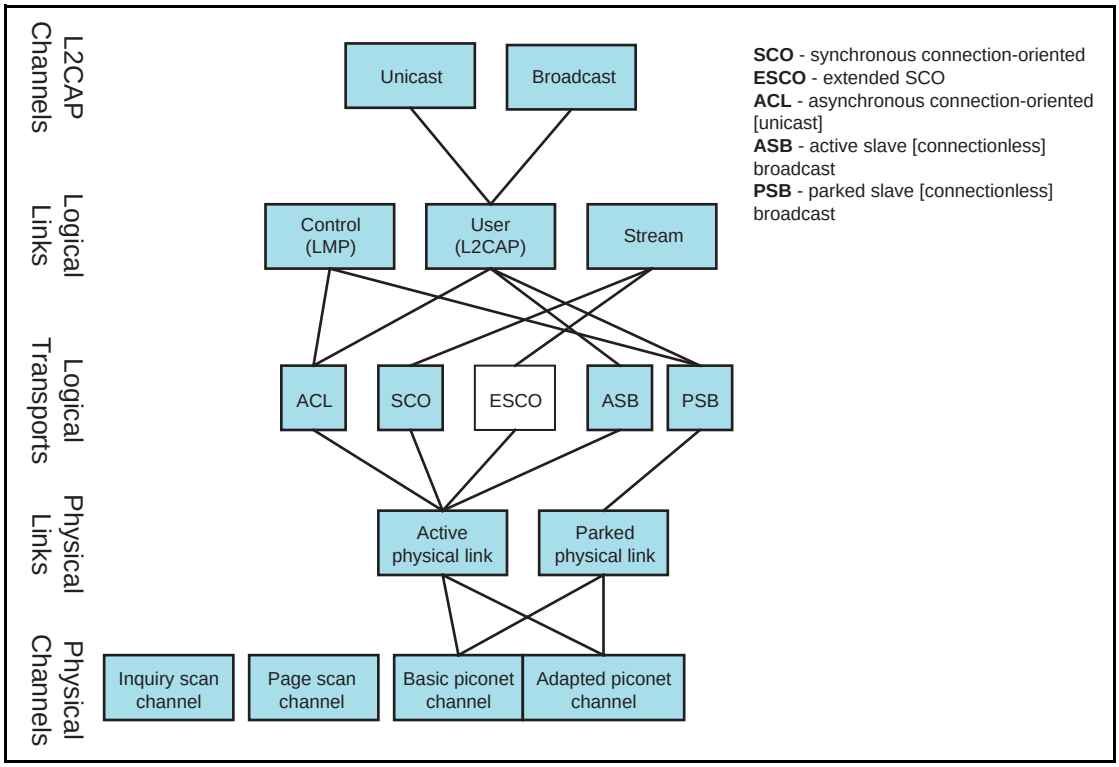

Figure 3.3: Overview of transport architecture entities and hierarchy

3.2.1 Bluetooth generic packet structure

The general packet structure nearly reflects the architectural layers found in the Bluetooth system. The packet structure is designed for optimal use in normal operation. It is shown in Figure 3.4 on page 30.

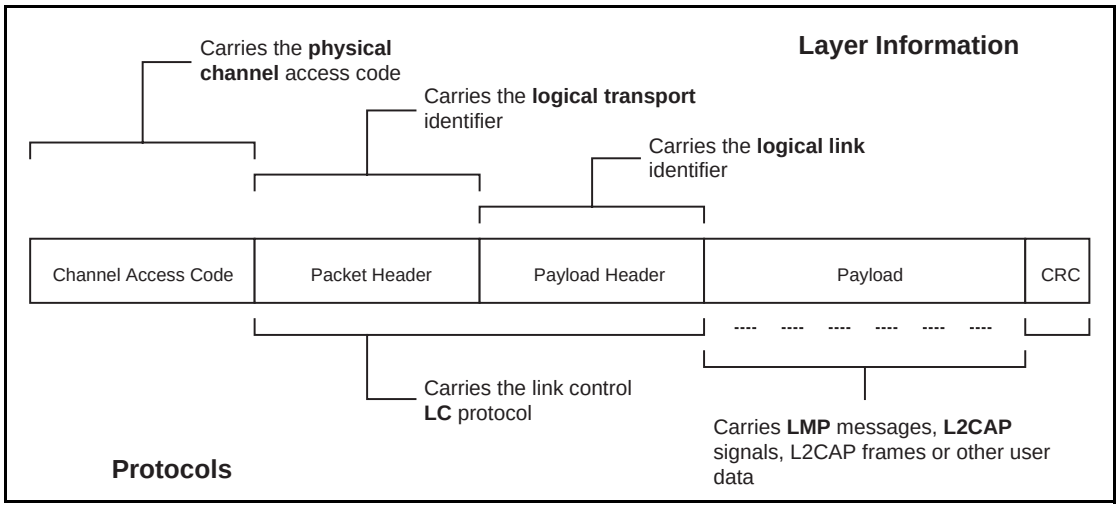

Figure 3.4: Bluetooth packet structure

Packets normally only include the fields that are necessary to represent the layers required by the transaction. Thus a simple inquiry request over an inquiry scan physical channel does not create or require a logical link or higher layer and therefore consists only of the channel access code (associated with the physical channel.) General communication within a piconet uses packets that include all of the fields, as all of the architectural layers are used.

All packets include the channel access code. This is used to identify communications on a particular physical channel, and to exclude or ignore packets on a different physical channel that happens to be using the same RF carrier in physical proximity.

There is no direct field within the Bluetooth packet structure that represents or contains information relating to physical links. This information is implied in the logical transport address (LT_ADDR) carried in the packet header.

Most packets include a packet header. The packet header is always present in packets transmitted on physical channels that support physical links, logical transports and logical links. The packet header carries the LT_ADDR, which is used by each receiving device to determine if the packet is addressed to the device and is used to route the packet internally.

The packet header also carries part of the link control (LC) protocol that is operated per logical transport (except for ACL and SCO transports that operate a shared LC protocol carried on either logical transport.)

The payload header is present in all packets on logical transports that support multiple logical links. The payload header includes a logical link identifier field used for routing the payload, and a field indicating the length of the payload. Some packet types also include a CRC after the packet payload that is used to detect most errors in received packets.

The packet payload is used to transport the user data. The interpretation of this data is dependent on the logical transport and logical link identifiers. For ACL logical transports Link Manager Protocol (LMP) messages and L2CAP signals are transported in the packet payload, along with general user data from applications. For SCO and eSCO logical transports the payload contains the user data for the logical link.

3.3 PHYSICAL CHANNELS

The lowest architectural layer in the Bluetooth system is the physical channel. A number of types of physical channel are defined. All Bluetooth physical channels are characterised by an RF frequency combined with temporal parameters and restricted by spatial considerations. For the basic and adapted piconet physical channels frequency hopping is used to change frequency periodically to reduce the effects of interference and for regulatory reasons.

Two Bluetooth devices use a shared physical channel for communication. To achieve this their transceivers need to be tuned to the same RF frequency at the same time, and they need to be within a nominal range of each other.

Given that the number of RF carriers is limited and that many Bluetooth devices may be operating independently within the same spatial and temporal area there is a strong likelihood of two independent Bluetooth devices having their transceivers tuned to the same RF carrier, resulting in a physical channel collision. To mitigate the unwanted effects of this collision each transmission on a physical channel starts with an access code that is used as a correlation code by devices tuned to the physical channel. This channel access code is a property of the physical channel. The access code is always present at the start of every transmitted packet.

Four Bluetooth physical channels are defined. Each is optimised and used for a different purpose. Two of these physical channels (the basic piconet channel and adapted piconet channel) are used for communication between connected devices and are associated with a specific piconet. The remaining physical channels are used for discovering Bluetooth devices (the inquiry scan channel) and for connecting Bluetooth devices (the page scan channel.)

A Bluetooth device can only use one of these physical channels at any given time. In order to support multiple concurrent operations the device uses time-division multiplexing between the channels. In this way a Bluetooth device can appear to operate simultaneously in several piconets, as well as being discoverable and connectable.

Whenever a Bluetooth device is synchronized to the timing, frequency and access code of a physical channel it is said to be ‘connected’ to this channel (whether or not it is actively involved in communications over the channel.) The Bluetooth specification assumes that a device is only capable of connecting to one physical channel at any time. Advanced devices may capable of connecting simultaneously to more than one physical channel, but the specification does not assume that this is possible.

3.3.1 Basic piconet channel

3.3.1.1 Overview

The basic piconet channel is used for communication between connected devices during normal operation.

3.3.1.2 Characteristics

The basic piconet channel is characterised by a pseudo-random sequence hopping through the RF channels. The hopping sequence is unique for the piconet and is determined by the Bluetooth device address of the master. The phase in the hopping sequence is determined by the Bluetooth clock of the master. All Bluetooth devices participating in the piconet are time- and hop-synchronized to the channel.

The channel is divided into time slots where each slot corresponds to an RF hop frequency. Consecutive hops correspond to different RF hop frequencies. The time slots are numbered according to the Bluetooth clock of the piconet master. Packets are transmitted by Bluetooth devices participating in the piconet aligned to start at a slot boundary. Each packet starts with the channel's access code, which is derived from the Bluetooth device address of the piconet.

On the basic piconet channel the master controls access to the channel. The master starts its transmission in even-numbered time slots only. Packets transmitted by the master are aligned with the slot start and define the piconet timing. Packets transmitted by the master may occupy up to five time slots depending on the packet type.

Each master transmission is a packet carrying information on one of the logical transports. Slave devices may transmit on the physical channel in response. The characteristics of the response are defined by the logical transport that is addressed.

For example on the asynchronous connection-oriented logical transport the addressed slave device responds by transmitting a packet containing information for the same logical transport that is nominally aligned with the next (odd-numbered) slot start. Such a packet may occupy up to five time slots, depending on the packet type. On a broadcast logical transport no slaves are allowed to respond.

A special characteristic of the basic piconet physical channel is the use of some reserved slots to transmit a beacon train. The beacon train is only used if the piconet physical channel has parked slaves connected to it. In this situation the master transmits a packet in the reserved beacon train slots (these packets are used by the slave to resynchronize to the piconet physical channel.) The master may transmit packets from any logical transport onto these slots, providing there is a transmission starting in each of the slots. In the case where

there is information from the parked slave broadcast (PSB) logical transport to be transmitted then this is transmitted in the beacon train slots and takes priority over any other logical transport.

3.3.1.3 Topology

A basic piconet channel may be shared by any number of Bluetooth devices, limited only by the resources available on the piconet master device. Only one device is the piconet master, all others being piconet slaves. All communication is between the master and slave devices. There is no direct communication between slave devices on the piconet channel.

There is, however, a limitation on the number of logical transports that can be supported within a piconet. This means that although there is no theoretical limit to the number of Bluetooth devices that share a channel there is a limit to the number of these devices that can be actively involved in exchanging data with the master.

3.3.1.4 Supported layers

The basic piconet channel supports a number of physical links, logical transports, logical links and L2CAP channels used for general purpose communications.

3.3.2 Adapted piconet channel

3.3.2.1 Overview

The adapted piconet channel differs from the basic piconet channel in two ways. First the frequencies on which the slaves transmit are the same as the preceding master transmit frequency. In other words the frequency is not recomputed between master and subsequent slave packets. The second way in which the adapted piconet channel differs from the basic piconet channel is that the adapted type can be based on fewer than the full 79 frequencies. A number of frequencies may be excluded from the hopping pattern by being marked as “unused”. The remainder of the 79 frequencies are included. The two sequences are the same except that whenever the basic pseudo-random hopping sequence would have selected an unused frequency it is replaced with an alternative chosen from the used set.

Because the adapted piconet channel uses the same timing and access code as the basic piconet channel, the two channels are often coincident. This provides a deliberate benefit as it allows slaves in either the basic piconet channel or the adapted piconet channel to adjust their synchronization to the master.

The topology and supported layers of the adapted piconet physical channel are identical to the basic piconet physical channel.

3.3.3 Inquiry scan channel

3.3.3.1 Overview

In order for a device to be discovered an inquiry scan channel is used. A discoverable device listens for inquiry requests on its inquiry scan channel and then sends responses to these requests. In order for a device to discover other devices, it iterates (hops) through all possible inquiry scan channel frequencies in a pseudo-random fashion, sending an inquiry request on each frequency and listening for any response.

3.3.3.2 Characteristics

Inquiry scan channels follow a slower hopping pattern and use an access code to distinguish between occasional occupancy of the same radio frequency by two co-located devices using different physical channels.

The access code used on the inquiry scan channel is taken from a reserved set of inquiry access codes that are shared by all Bluetooth devices. One access code is used for general inquiries, and a number of additional access codes are reserved for limited inquiries. Each device has access to a number of different inquiry scan channels. As all of these channels share an identical hopping pattern, a device may concurrently occupy more than one inquiry scan channel if it is capable of concurrently correlating more than one access code.

A device using one of its inquiry scan channel remains passive until it receives an inquiry message on this channel from another Bluetooth device. This is identified by the appropriate inquiry access code. The inquiry scanning device will then follow the inquiry response procedure to return a response to the inquiring device.

In order for a device to discover other Bluetooth devices it uses the inquiry scan channel of these devices in order to send inquiry requests. As it has no prior knowledge of the devices to discover, it cannot know the exact characteristics of the inquiry scan channel.

The device takes advantage of the fact that inquiry scan channels have a reduced number of hop frequencies and a slower rate of hopping. The inquiring device transmits inquiry requests on each of the inquiry scan hop frequencies and listens for an inquiry response. This is done at a faster rate, allowing the inquiring device to cover all inquiry scan frequencies in a reasonably short time period.

3.3.3.3 Topology

Inquiring and discoverable devices use a simple exchange of packets to fulfil the inquiring function. The topology formed during this transaction is a simple and transient point-to-point connection.

3.3.3.4 Supported layers

During the exchange of packets between an inquiring and discoverable device it may be considered that a temporary physical link exists between these devices. However, the concept is quite irrelevant as it has no physical representation but is only implied by the brief transaction between the devices. No further architectural layers are considered to be supported.

3.3.4 Page scan channel

3.3.4.1 Overview

A connectable device (one that is prepared to accept connections) does so using an page scan channel. A connectable device listens for page requests on its page scan channel and enters into a sequence of exchanges with this device. In order for a device to connect to another device, it iterates (hops) through all page scan channel frequencies in a pseudo-random fashion, sending an page request on each frequency and listening for any response.

3.3.4.2 Characteristics

The page scan channel uses an access code derived from the scanning device's Bluetooth device address to identify communications on the channel. The page scan channel uses a slower hopping rate than the hop rate of the basic and adapted piconet channels. The hop selection algorithm uses the Bluetooth device clock of the scanning device as an input.

A device using its page scan channel remains passive until it receives a page request from another Bluetooth device. This is identified by the page scan channel access code. The two devices will then follow the page procedure to form a connection. Following a successful conclusion of the page procedure both devices switch to the basic piconet channel that is characterised by having the paging device as master.

In order for a device to connect to another Bluetooth device it uses the page scan channel of the target device in order to send page requests. If the paging device does not know the phase of the target device's page scan channel it therefore does not know the current hop frequency of the target device. The paging device transmits page requests on each of the page scan hop frequencies and listens for a page response. This is done at a faster hop rate, allowing

the paging device to cover all page scan frequencies in a reasonably short time period.

The paging device may have some knowledge of the target device's Bluetooth clock (indicated during a previous inquiry transaction between the two devices, or as a result of a previous involvement in a piconet with the device), in which case it is able to predict the phase of the target device's page scan channel. It may use this information to optimise the synchronization of the paging and page scanning process and speed up the formation of the connection.

3.3.4.3 Topology

Paging and connectable devices use a simple exchange of packets to fulfil the paging function. The topology formed during this transaction is a simple and transient point-to-point connection.

3.3.4.4 Supported layers

During the exchange of packets between an paging and connectable device it may be considered that a temporary physical link exists between these devices. However, the concept is quite irrelevant as it has no physical representation but is only implied by the brief transaction between the devices. No further architectural layers are considered to be supported.

3.4 PHYSICAL LINKS

A physical link represents a baseband connection between Bluetooth devices. A physical link is always associated with exactly one physical channel (although a physical channel may support more than one physical link.)

Within the Bluetooth system a physical link is a virtual concept that has no direct representation within the structure of a transmitted packet. The access code packet field, together with the clock and address of the master Bluetooth device are used to identify a physical channel. However there is no subsequent part of the packet that directly identifies the physical link. Instead the physical link may be identified by association with the logical transport, as each logical transport is only received on one physical link.

Some physical link types have properties that may be modified. An example of this is the transmit power for the link. Other physical link types have no such properties. In the case of physical links with modifiable properties the LM protocol is used to adapt these properties. As the LM protocol is supported at a higher layer (by a logical link) the appropriate physical link is identified by implication from the logical link that transports the LM signalling.

In the situation where a transmission is broadcasted over a number of different physical links, then the transmission parameters are selected to be suitable for all of the physical links.

3.4.1 Links supported by the basic and adapted piconet physical channel

The basic and adapted piconet physical channels support a physical link which may be active or parked. The physical link is a point-to-point link between the master and a slave. It is always present when the slave is synchronized in the piconet.

3.4.1.1 Active physical link

The physical link between a master and a slave device is active if a default ACL logical transport exists between the devices. Active physical links have no direct identification of their own, but are identified by association with the default ACL logical transport ID with which there is a one-to-one correspondence.

An active physical link has the associated properties of radio transmit power in each direction. Transmissions from slave devices are always directed over the active physical link to the master, and use the transmit power that is a property of this link in the slave to master direction. Transmissions from the master may be directed over a single active physical link (to a specific slave) or over a number of physical links (to a group of slaves in the piconet.) In the case of point-to-point transmissions the master uses the appropriate transmit power for the physical link in question. (In the case of point-to-multipoint transmissions the master uses a transmit power appropriate for the set of devices addressed.)

Active physical links may be placed into hold or sniff mode. The effect of these modes is to modify the periods when the physical link is active and may carry traffic. Logical transports that have defined scheduling characteristics are not affected by these modes and continue according to their pre-defined scheduling behaviour. The default ACL logical transport and other links with undefined scheduling characteristics are subject to the mode of the active physical link.

3.4.1.2 Parked physical link

The physical link between a master and a slave device is parked when the slave remains synchronized in the piconet, but has no default ACL logical transport. Such a slave is also said to be parked. A beacon train is used to provide regular synchronization to all parked slaves connected to the piconet physical channel. A parked slave broadcast (PSB) logical transport is used to allow communication of a subset of LMP signalling and broadcast L2CAP to parked slaves. The PSB logical transport is closely associated with the beacon train.

A slave is parked (its active link is changed to a parked link) using the park procedure. The master is not allowed to park a slave that has any user created logical transport supported by the physical link. These logical transports are first removed, and any L2CAP channels that are built on these logical transports are also removed. The broadcast logical transport and default ACL logical transports are not considered as user created and are not explicitly removed. When the active link is replaced with a parked link the default ACL

logical transport is implicitly removed. The supported logical links and L2CAP channels remain in existence, but become suspended. It is not possible to use these links and L2CAP channels to transport signalling or data while the active link is absent.

A parked slave may become active using the unpark procedure. This procedure is requested by the slave at an access window and initiated by the master. Following the unpark procedure the parked physical link is changed to an active physical link and the default ACL logical transport is re-created. L2CAP channels that were suspended during the most recent park procedure are associated with the new default ACL logical transport and become active again.

Parked links do not support radio power control, as there is no feedback path from parked slaves to the piconet master that can be used to signal received signal strength at the slave or for the master to measure received signal strength from the slave. Transmissions are carried out at nominal power on parked links.

Parked links use the same physical channel as their associated active link. If a master manages a piconet that contains parked slaves using the basic piconet physical channel and also parked slaves using the adapted piconet physical channel then it must create a parked slave broadcast logical transport (and associated transport) for each of these physical channels.

A parked slave may use the inactive periods of the parked slave broadcast logical transport to save power, or it may carry out activities on other physical channels unrelated to the piconet within which it is parked.

3.4.2 Links supported by the scanning physical channels

In the case of the inquiry scan and page scan channels the physical link exists for a relatively short time and cannot be controlled or modified in any way. These types of physical link are not further elaborated.

3.5 LOGICAL LINKS AND LOGICAL TRANSPORTS

A variety of logical links are available to support different application data transport requirements. Each logical link is associated with a logical transport, which has a number of characteristics. These characteristics include flow control, acknowledgement/repeat mechanisms, sequence numbering and scheduling behaviour. Logical transports are able to carry different types of logical links (depending on the type of the logical transport). In the case of some of the Bluetooth 1.1 logical links these are multiplexed onto the same logical transport. Logical transports may be carried by active physical links on either the basic or the adapted piconet physical channel.

Logical transport identification and real-time (link control) signalling are carried in the packet header, and for some logical links identification is carried in the

payload header. Control signalling that does not require single slot response times is carried out using the LMP protocol.

Table 3.1 on page 40 lists all of the logical transport types, the supported logical link types, which type of physical links and physical channels can support them, and a brief description of the purpose of the logical transport.

Logical transport	Links supported	Supported by	Overview
Asynchronous Connection-Oriented (ACL[1])	Control (LMP) ACL-C User (L2CAP) ACL-U	Active physical link, basic or adapted physical channel	Reliable or time-bounded, bi-directional, point-to-point.
Synchronous Connection-Oriented (SCO)	Stream (unframed) SCO-S	Active physical link, basic or adapted physical channel	Bi-directional, symmetric, point-to-point, AV channels. Used for 64Kb/s constant rate data.
Extended Synchronous Connection-Oriented (eSCO)	Stream (unframed) eSCO-S	Active physical link, basic or adapted physical channel	Bi-directional, symmetric or asymmetric, point-to-point, general regular data, limited retransmission. Used for constant rate data synchronized to the master Bluetooth clock.
Active slave broadcast (ASB)	User (L2CAP) ASB-U	Active physical link, basic or adapted physical channel.	Unreliable, uni-directional broadcast to any devices synchronised with the physical channel. Used for broadcast L2CAP groups.
Parked slave broadcast (PSB)	Control (LMP) PSB-C, User (L2CAP) PSB-U	Parked physical link, basic or adapted physical channel.	Unreliable, uni-directional broadcast to all piconet devices. Used for LMP and L2CAP traffic to parked devices, and for access requests from parked devices.

Table 3.1: Logical transport types.

1. It is clear that the most obvious abbreviation for Asynchronous Connection-Oriented logical transport is ACO. However, this acronym has an alternative meaning from the Bluetooth 1.1 specification. To avoid confusion between two possible meanings for ACO the decision was made to retain the ACL abbreviation for the Asynchronous Connection-oriented Logical transport.

The names given to the logical links and logical transports reflect some of the names used in Bluetooth 1.1, in order to provide some degree of familiarity and continuation. However these names do not reflect a consistent scheme, which is outlined below.

The classification of each link type follows from a selection procedure within three categories.

3.5.1 Casting

The first category is that of casting. This may be either unicast or broadcast. There are no multicast links defined in Bluetooth 1.2,

- *Unicast links.* Unicast links exist between exactly two endpoints. Traffic may be sent in either direction on unicast links. All unicast links are connection-oriented, meaning that a connection procedure takes place before the link may be used. In the case of the default ACL links, the connection procedure is an implicit step within the general paging procedure used to form ad-hoc piconets.
- *Broadcast links.* Broadcast links exist between one source device and zero or more receiver devices. Traffic is unidirectional, i e only sent from the source devices to the receiver devices. Broadcast links are connectionless, meaning that there is no procedure to create these links, and data may be sent over them at any time. Broadcast links are unreliable, and there is no guarantee that the data will be received.

3.5.2 Scheduling and acknowledgement scheme

The second category relates to the scheduling and acknowledgement scheme of the link, and implies the type of traffic that is supported by the link. These are synchronous, isochronous or asynchronous. There are no specific isochronous links defined in Bluetooth 1.2, though the default ACL link can be configured to operate in this fashion.

- *Synchronous links.* Synchronous links provide a method of associating the Bluetooth piconet clock with the transported data. This is achieved by reserving regular slots on the physical channel, and transmitting fixed size packets at these regular intervals. Such links are suitable for constant rate isochronous data.
- *Asynchronous links.* Asynchronous links provide a method for transporting data that has no time-based characteristics. The data is normally expected to be retransmitted until successfully received, and each data entity can be processed at any time after receipt, without reference to the time of receipt of any previous or successive entity in the stream (providing the ordering of data entities is preserved.)
- *Isochronous links.* Isochronous links provide a method for transporting data that has time-based characteristics. The data may be retransmitted until received or expired. The data rate on the link need not be constant (this being the main difference from synchronous links.)

3.5.3 Class of data

The final category is related to the class of data that is carried by the link. This is either control (LMP) data or user data. The user data category is sub-divided into L2CAP (or framed) data and stream (or unframed) data.

- *Control links.* Control links are only used for transporting LMP messages between two link managers. These links are invisible above the baseband layer, and cannot be directly instantiated, configured or released by applications, other than by the use of the connection and disconnection services that have this effect implicitly. Control links are always multiplexed with an equivalent L2CAP link onto an ACL logical transport. Subject to the rules defining the ARQ scheme, the control link traffic always takes priority over the L2CAP link traffic.
- *L2CAP links.* L2CAP links are used to transport L2CAP PDUs, which may carry the L2CAP signalling channel (on the default ACL-U logical link only) or framed user data submitted to user-instantiated L2CAP channels. L2CAP frames submitted to the baseband may be larger than the available baseband packets. A link control protocol embedded within the LLID field preserves the frame-start and frame-continuation semantics when the frame is transmitted in a number of fragments to the receiver.
- *Stream links.* Stream links are used to transport user data that has no inherent framing that should be preserved when delivering the data. Lost data may be replaced by padding at the receiver.

3.5.4 Asynchronous connection-oriented (ACL)

The asynchronous connection-oriented (ACL) logical transport is used to carry LMP and L2CAP control signalling and best effort asynchronous user data. The ACL logical transport uses a simple 1-bit ARQN/SEQN scheme to provide simple channel reliability. Every active slave device within a piconet has one ACL logical transport to the piconet master, known as the default ACL.

The default ACL is created between the master and the slave when a device joins a piconet (connects to the basic piconet physical channel). This default ACL is assigned a logical transport address (LT_ADDR) by the piconet master. This LT_ADDR is also used to identify the active physical link when required (or as a piconet active member identifier, effectively for the same purpose.)

The LT_ADDR for the default ACL is reused for synchronous connection-oriented logical transports between the same master and slave. (This is for reasons of compatibility with earlier Bluetooth specifications.) Thus the LT_ADDR is not sufficient on its own to identify the default ACL. However the packet types used on the ACL are different from those used on the synchronous connection-oriented logical transport. Therefore, the ACL logical transport can be identified by the LT_ADDR field in the packet header in combination with the packet type field.

The default ACL may be used for isochronous data transport by configuring it to automatically flush packets after the packets have expired.

If the default ACL is removed from the active physical link then all other logical transports that exist between the master and the slave are also removed. In the case of unexpected loss of synchronization to the piconet physical channel the physical link and all logical transports and logical links cease to exist at the time that this synchronization loss is detected.

A device may remove its default ACL (and by implication its active physical link) but remain synchronized to the piconet. This procedure is known as parking, and a device that is synchronized to the piconet, but has no active physical link is parked within that piconet.

When the device transitions to the parked state the default ACL logical links that are transported on the default ACL logical transport remain in existence, but become suspended. No data may be transferred across a suspended logical link. When the device transitions from the parked state back into active state, a new default ACL logical transport is created (it may have a different LT_ADDR from the previous one) and the suspended logical links are attached to this default ACL and become active once again.

3.5.5 Synchronous connection-oriented (SCO)

The synchronous connection-oriented (SCO) logical transport is a symmetric, point-to-point channel between the master and a specific slave. The SCO logical transport reserves slots on the physical channel and can therefore be considered as a circuit-switched connection between the master and the slave. SCO logical transports carry 64 kb/s of information synchronized with the piconet clock. Typically this information is an encoded voice stream. Three different SCO configurations exist, offering a balance between robustness, delay and bandwidth consumption.

Each SCO-S logical link is supported by a single SCO logical transport, which is assigned the same LT_ADDR as the default ACL logical transport between the devices. Therefore the LT_ADDR field is not sufficient to identify the destination of a received packet. Because the SCO links use reserved slots, a device uses a combination of the LT_ADDR, the slot numbers (a property of the physical channel) and the packet type to identify transmissions on the SCO link.

The reuse of the default ACL’s LT_ADDR for SCO logical transports is due to legacy behaviour from the Bluetooth 1.1 specification. In this earlier version of Bluetooth the LT_ADDR (then known as the active member address) was used to identify the piconet member associated with each transmission. This was not easily extensible for enabling more logical links, and so the purpose of this field was redefined for the new features. Some Bluetooth 1.1 features, however, do not cleanly fit into the more formally described architecture.

Although slots are reserved for the SCO, it is permissible to use a reserved slot for traffic from another channel that has a higher priority. This may be required as a result of QoS commitments, or to send LMP signalling on the default ACL when the physical channel bandwidth is fully occupied by SCOs. As SCOs carry different packet types to ACLs, the packet type is used to identify SCO traffic (in addition to the slot number and LT_ADDR.)

There are no further architectural layers defined by the Bluetooth core specification that are transported over an SCO link. A number of standard formats are defined for the 64 kb/s stream that is transported, or an unformatted stream is allowed where the application is responsible for interpreting the encoding of the stream.

3.5.6 Extended synchronous connection-oriented (eSCO)

The extended synchronous connection-oriented (eSCO) logical transport is a symmetric or asymmetric, point-to-point link between the master and a specific slave. The eSCO reserves slots on the physical channel and can therefore be considered as a circuit-switched connection between the master and the slave. eSCO links offer a number of extensions over the standard SCO links, in that they support a more flexible combination of packet types and selectable data contents in the packets and selectable slot periods, allowing a range of synchronous bit rates to be supported.

eSCO links also can offer limited retransmission of packets (unlike SCO links where there is no retransmission.) If these retransmissions are required they take place in the slots that follow the reserved slots, otherwise the slots may be used for other traffic.

Each eSCO-S logical link is supported by a single eSCO logical transport, identified by a LT_ADDR that is unique within the piconet for the duration of the eSCO. eSCO-S links are created using LM signalling and follow scheduling rules similar to SCO-S links.

There are no further architectural layers defined by the Bluetooth core specification that are transported over an eSCO-S link. Instead applications may use the data stream for whatever purpose they require, subject to the transport characteristics of the stream being suitable for the data being transported.

3.5.7 Active slave broadcast (ASB)

The active slave broadcast logical transport is used to transport L2CAP user traffic to all devices in the piconet that are currently connected to the physical channel that is used by the ASB. There is no acknowledgement protocol and the traffic is uni-directional from the piconet master to the slaves. The ASB channel may be used for L2CAP group traffic (a legacy of the 1.1 specification), and is never used for L2CAP connection-oriented channels, L2CAP control signalling or LMP control signalling.

The ASB logical transport is inherently unreliable because of the lack of acknowledgement. To improve the reliability, each packet is transmitted a number of times. An identical sequence number is used to assist with filtering retransmissions at the slave device.

The ASB logical transport is identified by a reserved LT_ADDR. (The reserved LT_ADDR address is also used by the PSB logical transport.) An active slave will receive traffic on both logical transports, and cannot readily distinguish between them. As the ASB logical transport does not carry LMP traffic an active slave can ignore packets received over the LMP logical link on the ASB logical transport. However L2CAP traffic transmitted over the PSB logical transport is also received by active slaves on the ASB logical transport and cannot be distinguished from L2CAP traffic sent on the ASB transport.

An ASB is implicitly created whenever a piconet exists, and there is always one ASB associated with each of the basic and adapted piconet physical channels that exist within the piconet. Because the basic and adapted piconet physical channels are mostly coincident a slave device cannot distinguish which of the ASB channels is being used to transmit the packets. This adds to the general unreliability of the ASB channel. (Although it is, perhaps, no more unreliable than general missed packets.)

A master device may decide to use only one of its two possible ASBs (when it has both a basic and adapted piconet physical channel), as with sufficient retransmissions it is possible to address both groups of slaves on the same ASB channel.

The ASB channel is never used to carry LMP or L2CAP control signals.

3.5.8 Parked slave broadcast (PSB)

The parked slave broadcast logical transport is used for communications between the master and slaves that are parked (have given up their default ACL logical transport.) The parked slave broadcast link is the only logical transport that exists between the piconet master and parked slaves.

The PSB logical transport is more complex than the other logical transports as it consists of a number of phases, each having a different purpose. These phases are the control information phase (used to carry the LMP logical link), the user information phase (used to carry the L2CAP logical link), and the access phase (carrying baseband signalling.) The control information and broadcast information phases are usually mutually exclusive as only one of them can be supported in a single beacon interval. (Even if there is no control or user information phase, the master is still required to transmit a packet in the beacon slots so that the parked slaves can resynchronize.) The access phase is normally present unless cancelled in a control information message.

The control information phase is used for the master to send information to the parked slaves containing modifications to the PSB transport attributes, modifi-

cations to the beacon train attributes, or a request for a parked slave to become active in the piconet (known as unparking). This control information is carried in LMP messages on the LMP logical link. (The control information phase is also present in the case of a user information phase where the user information requires more than one baseband packet.)

Packets in the control information phase are always transmitted in the physical channel beacon train slots, and cannot be transmitted on any other slots. The control information occupies a single DM1 packet and is repeated in every beacon train slot within a single beacon interval. (If there is no control information then there may be a user information phase that uses the beacon slots. If neither phase is used then the beacon slots are used for other logical transport traffic or for NULL packets.)

The user information phase is used for the master to send L2CAP packets that are destined for all piconet slaves. User information may occupy one or more baseband packets. If the user information occupies a single packet then the user information packet is repeated in each of the piconet channel beacon train slots.

If the user information occupies more than one baseband packet then it is transmitted in slots after the beacon train (the broadcast scan window) and the beacon slots are used to transmit a control information phase message that contains the timing attributes of this broadcast scan window. This is required so that the parked slaves remain connected to the piconet physical channel to receive the user information.

The access phase is normally present unless temporarily cancelled by a control message carried in the control information broadcast phase. The access window consists of a sequence of slots that follow the beacon train. In order for a parked slave to become active in the piconet, it may send such an access request to the piconet master during the access window. Each parked slave is allocated an access request address (not necessarily unique) that controls when during the access window the slave requests access.

The PSB logical transport is identified by the reserved LT_ADDR of 0. This reserved LT_ADDR address is also used by the ASB logical transport. Parked slaves are not normally confused by the duplicated use of the LT_ADDR as they are only connected to the piconet physical channel during the time that the PSB transport is being used.

3.5.9 Logical links

Some logical transports are capable of supporting different logical links, either concurrently multiplexed, or one of the choice. Within such logical transports, the logical link is identified by the logical link identifier (LLID) bits in the payload header of baseband packets that carry a data payload. The logical links distinguish between a limited set of core protocols that are able to transmit and receive data on the logical transports. Not all of the logical transports are able to carry all of the logical links (the supported mapping is shown in Figure 3.2 on

page 26.) In particular the SCO and eSCO logical transports are only able to carry constant data rate streams, and these are uniquely identified by the LT_ADDR. Such logical transports only use packets that do not contain a payload header, as their length is known in advance, and no LLID is necessary.

3.5.10 ACL Control Logical Link (ACL-C)

The ACL Control Logical Link (ACL-C) is used to carry LMP signalling between devices in the piconet. The control link is only carried on the default ACL logical transport and on the PSB logical transport (in the control information phase). The ACL-C link is always given priority over the ACL-U (see below) link when carried on the same logical transport.

3.5.11 User Asynchronous/Isochronous Logical Link (ACL-U)

The user asynchronous/isochronous logical link (ACL-U) is used to carry all asynchronous and isochronous framed user data. The ACL-U link is carried on all but the synchronous logical transports. Packets on the ACL-U link are identified by one of two reserved LLID values. One value is used to indicate whether the baseband packet contains the start of an L2CAP frame and the other indicates a continuation of a previous frame. This ensures correct synchronization of the L2CAP reassembler following flushed packets. The use of this technique removes the need for a more complex L2CAP header in every baseband packet (the header is only required in the L2CAP start packets), but adds the requirement that a complete L2CAP frame shall be transmitted before a new one is transmitted. (An exception to this rule being the ability to flush a partially transmitted L2CAP frame in favour of another L2CAP frame.)

3.5.12 User Synchronous/Extended Synchronous Logical Links (SCO-S/ eSCO-S)

Synchronous (SCO-S) and extended synchronous (eSCO-S) logical links are used to support isochronous data delivered in a stream without framing. These links are associated with a single logical transport, where data is delivered in constant sized units at a constant rate. There is no LLID within the packets on these transports, as only a single logical link can be supported, and the packet length and scheduling period are pre-defined and remain fixed during the lifetime of the link.

Variable rate isochronous data cannot be carried by the SCO-S or eSCO-S logical links. In this case the data must be carried on ACL-U logical links, which use packets with a payload header. Bluetooth has some limitations when supporting variable-rate isochronous data concurrently with reliable user data.

3.6 L2CAP CHANNELS

L2CAP provides a multiplexing role allowing many different applications to share the resources of an ACL-U logical link between two devices. Applications and service protocols interface with L2CAP using a channel-oriented interface to create connections to equivalent entities on other devices.

L2CAP channel endpoints are identified to their clients by a Channel Identifier (CID). This is assigned by L2CAP, and each L2CAP channel endpoint on any device has a different CID.

L2CAP channels may be configured to provide an appropriate Quality of Service (QoS) to the application. L2CAP maps the channel onto the ACL-U logical link.

L2CAP supports channels that are connection-oriented and others that are group-oriented. Group-oriented channels may be mapped onto the ASB-U logical link, or implemented as iterated transmission to each member in turn over an ACL-U logical link.

Apart from the creation, configuration and dismantling of channels, the main role of L2CAP is to multiplex service data units (SDUs) from the channel clients onto the ACL-U logical links, and to carry out a simple level of scheduling, selecting SDUs according to relative priority.

L2CAP can provide a per channel flow control with the peer L2CAP layer. This option is selected by the application when the channel is established. L2CAP can also provide enhanced error detection and retransmission to (a) reduce the probability of undetected errors being passed to the application and (b) recover from loss of portions of the user data when the Baseband layer performs a flush on the ACL-U logical link.

In the case where an HCI is present, the L2CAP is also required to segment L2CAP SDUs into fragments that will fit into the baseband buffers, and also to operate a token based flow control procedure over the HCI, submitting fragments to the baseband only when allowed to do so. This may affect the scheduling algorithm.

4 COMMUNICATION TOPOLOGY

4.1 PICONET TOPOLOGY

Any time a Bluetooth link is formed it is within the context of a piconet. A piconet consists of two or more devices that occupy the same physical channel (which means that they are synchronized to a common clock and hopping sequence.) The common (piconet) clock is identical to the Bluetooth clock of one of the devices in the piconet, known as the master of the piconet, and the hopping sequence is derived from the master's clock and the master's Bluetooth device address. All other synchronized devices are referred to as slaves in the piconet. The terms master and slave are only used when describing these roles in a piconet.

Within a common location a number of independent piconets may exist. Each piconet has a different physical channel (that is a different master device and an independent piconet clock and hopping sequence.)

A Bluetooth device may participate concurrently in two or more piconets. It does this on a time-division multiplexing basis. A Bluetooth device can never be a master of more than one piconet. (Since the piconet is defined by synchronization to the master's Bluetooth clock it is impossible to be the master of two or more piconets.) A Bluetooth device may be a slave in many independent piconets.

A Bluetooth device that is a member of two or more piconets is said to be involved in a scatternet. Involvement in a scatternet does not necessarily imply any network routing capability or function in the Bluetooth device. The Bluetooth core protocols do not, and are not intended to offer such functionality, which is the responsibility of higher level protocols and is outside the scope of the Bluetooth core specification.

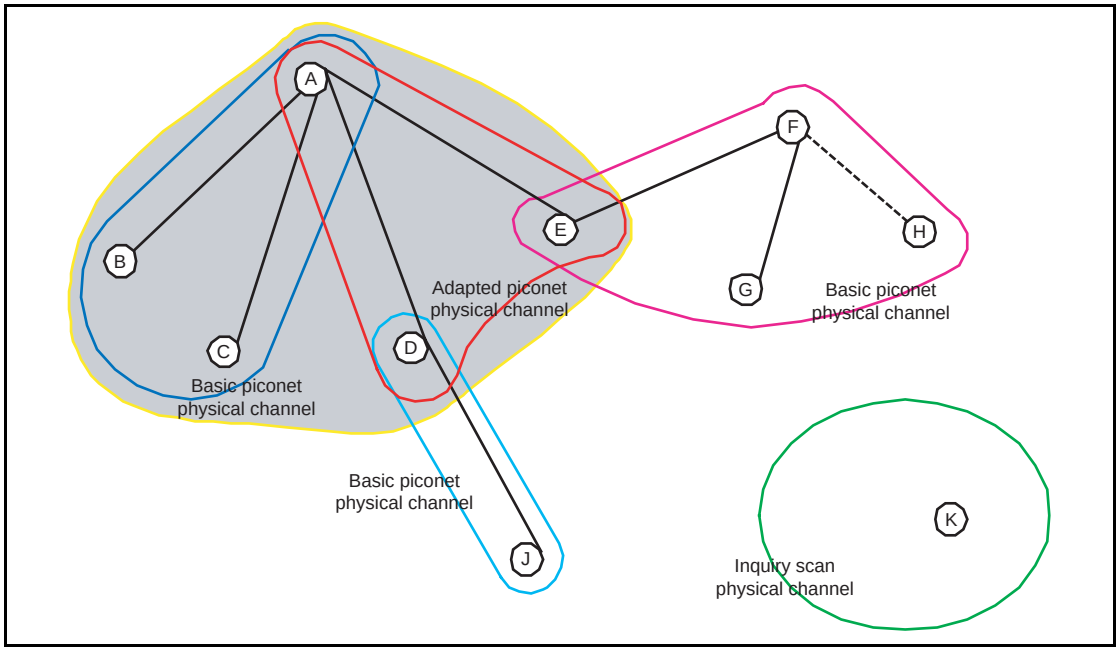

Figure 4.1: Example Bluetooth topology

In Figure 4.1 on page 50 an example topology is shown that demonstrates a number of the architectural features described below. Device A is a master in a piconet (represented by the shaded area, and known as piconet A) with devices B, C, D and E as slaves. Two other piconets are shown: a) one piconet with device F as master (known as piconet F) and devices E, G and H as slaves and b) one piconet with device D as master (known as piconet D) and device J as slave.

In piconet A there are two physical channels. Devices B and C are using the basic piconet physical channel (represented by the blue enclosure) as they do not support adaptive frequency hopping. Devices D and E are capable of supporting adaptive frequency hopping, and are using the adapted piconet physical channel (represented by the red enclosure.) Device A is capable of adaptive frequency hopping, and operates in a TDM basis on both physical channels according to which slave is being addressed.

Piconet D and piconet F are both using only a basic piconet physical channel (represented by the cyan and magenta enclosures respectively.) In the case of piconet D this is because device J does not support the adaptive hopping mode. Although device D supports adaptive hopping it cannot use it in this piconet. In piconet F device F does not support adaptive hopping, and therefore it cannot be used in this piconet.

Device K is shown in the same locality as the other devices. It is not currently a member of a piconet, but has services that it offers to other Bluetooth devices. It is currently listening on its inquiry scan physical channel (represented by the green enclosure), awaiting an inquiry request from another device.

Physical links (one per slave device) are represented in the diagram by lines connecting the devices. The solid lines represent an active physical link, and the dashed line represents a parked physical link. Device H is parked, and hence the physical link between the master (F) and the slave (H) is shown as parked.

Logical transports, logical links and L2CAP channels are used to provide capabilities for the transport of data, but are not shown on this diagram. They are described in more detail in Section 3.5 on page 39 and Section 3.6 on page 48.

4.2 OPERATIONAL PROCEDURES AND MODES

The typical operational mode of a Bluetooth device is to be connected to other Bluetooth devices (in a piconet) and exchanging data with that Bluetooth device. As Bluetooth is an ad-hoc wireless communications technology there are also a number of operational procedures that enable piconets to be formed so that the subsequent communications can take place. Procedures and modes are applied at different layers in the architecture and therefore a device may be engaged in a number of these procedures and modes concurrently.

4.2.1 Inquiry (Discovering) Procedure

Bluetooth devices use the inquiry procedure to discover nearby devices, or to be discovered by devices in their locality.

The inquiry procedure is asymmetrical. A Bluetooth device that tries to find other nearby devices is known as an inquiring device and actively sends inquiry requests. Bluetooth devices that are available to be found are known as discoverable devices and listen for these inquiry requests and send responses. The inquiry procedure uses a special physical channel for the inquiry requests and responses.

Both inquiring and discoverable devices may already be connected to other Bluetooth devices in a piconet. Any time spent inquiring or occupying the inquiry scan physical channel needs to be balanced with the demands of the QoS commitments on existing logical transports.

The inquiry procedure does not make use of any of the architectural layers above the physical channel, although a transient physical link may be considered to be present during the exchange of inquiry and inquiry response information.

4.2.2 Paging (Connecting) Procedure

The procedure for forming connections is asymmetrical and requires that one Bluetooth device carries out the page (connection) procedure while the other Bluetooth device is connectable (page scanning.) The procedure is targeted, so that the page procedure is only responded to by one specified Bluetooth device.

The connectable device uses a special physical channel to listen for connection request packets from the paging (connecting) device. This physical channel has attributes that are specific to the connectable device, hence only a paging device with knowledge of the connectable device is able to communicate on this channel.

Both paging and connectable devices may already be connected to other Bluetooth devices in a piconet. Any time spent paging or occupying the page scan physical channel needs to be balanced with the demands of the QoS commitments on existing logical transports.

4.2.3 Connected mode

After a successful connection procedure, the devices are physically connected to each other within a piconet. This means that there is a piconet physical channel to which they are both connected, there is a physical link between the devices, and there are default ACL-C and ACL-U logical links. When in the connected mode it is possible to create and release additional logical links, and to change the modes of the physical and logical links while remaining connected to the piconet physical channel. It is also possible for the device to carry out inquiry, paging or scanning procedures or to be connected to other piconets without needing to disconnect from the original piconet physical channel.

Additional logical links are created using the Link Manager that exchanges Link Manager Protocol messages with the remote Bluetooth device to negotiate the creation and settings for these links. Default ACL-C and ACL-U logical links are always created during the connection process, and these are used for LMP messages and the L2CAP signalling channel respectively.

It is noted that two default logical links are created when two units are initially connected. One of these links (ACL-C) transports the LMP control protocol and is invisible to the layers above the Link Manager. The other link (ACL-U) transports the L2CAP signalling protocol and any multiplexed L2CAP best-effort channels. It is common to refer to a default ACL logical transport, which can be resolved by context, but typically refers to the default ACL-U logical link. Also note that these two logical links share a logical transport.

During the time that a slave device is actively connected to a piconet there is always a default ACL logical transport between the slave and the master device. There are two methods of deleting the default ACL logical transport. The first method is to detach the device from the piconet physical channel, at

which time the entire hierarchy of L2CAP channels, logical links and logical transports between the devices is deleted.

The second method is to place the physical link to the slave device in the park state, at which time it gives up its default ACL logical transport. This is only allowed if all other logical transports have been deleted (except for the ASB logical transport that cannot be explicitly created or deleted.) It is not allowed to park a device while it has any logical transports other than the default ACL and ASB logical transports.

When the slave device physical link is parked, its default ACL logical transport is released and the ASB logical transport is replaced with a PSB logical transport. The ACL-C and ACL-U logical links that are multiplexed onto the default ACL logical transport remain in existence but cannot be used for the transport of data. The Link Manager on the master device restricts itself to the use of LMP messages that are allowed to be transported over the PSB-C logical link. The Channel Manager and L2CAP Resource Manager ensure that no L2CAP unicast data traffic is submitted to the controller while the device is parked. The Channel Manager may decide to manage the parking and unparking of the device as necessary to allow data to be transported.

4.2.4 Hold mode

Hold mode is not a general device mode, but applies to unreserved slots on the physical link. When in this mode, the physical link is only active during slots that are reserved for the operation of the synchronous link types SCO and eSCO. All asynchronous links are inactive. Hold modes operate once for each invocation and are then exited when complete, returning to the previous mode.

4.2.5 Sniff mode

Sniff mode is not a general device mode, but applies to the default ACL logical transports. When in this mode the availability of these logical transports is modified by defining a duty cycle consisting of periods of presence and absence. Devices that have their default ACL logical transports in sniff mode may use the absent periods to engage in activity on another physical channel, or to enter reduced power mode. Sniff mode only affects the default ACL logical transports (i.e. their shared ACL logical transport), and does not apply to any additional SCO or eSCO logical transports that may be active. The periods of presence and absence of the physical link on the piconet physical channel is derived as a union of all logical transports that are built on the physical link.

Note that broadcast logical transports have no defined expectations for presence or absence. A master device should aim to schedule broadcasts to coincide with periods of physical link presence within the piconet physical channel, but this may not always be possible or practical. Repetition of broadcasts is defined to improve the possibilities for reaching multiple slaves without overlapping presence periods. However, broadcast logical transports cannot be considered to be reliable.

4.2.6 Parked state

A slave device may remain connected to a piconet but have its physical link in the parked state. In this state the device cannot support any logical links to the master with the exception of the PSB-C and PSB-U logical links that are used for all communication between the piconet master and the parked slave.

When the physical link to a slave device is parked this means that there are restrictions on when the master and slave may communicate, defined by the PSB logical transport parameters. During times when the PSB logical transport is inactive (or absent) then the devices may engage in activity on other physical channels, or enter reduced power mode.

4.2.7 Role switch procedure

The role switch procedure is a method for swapping the roles of two devices connected in a piconet. The procedure involves moving from the physical channel that is defined by the original master device to the physical channel that is defined by the new master device. In the process of swapping from one physical channel to the next, the hierarchy of physical links and logical transports are removed and rebuilt, with the exception of the ASB and PSB logical transports that are implied by the topology and are not preserved. After the role switch, the original piconet physical channel may cease to exist or may be continued if the original master had other slaves that are still connected to the channel.

The procedure only copies the default ACL logical links and supporting layers to the new physical channel. Any additional logical transports are not copied by this procedure, and if required this must be carried out by higher layers. The LT_ADDRs of any affected transports may not be preserved as the values may already be in use on the new physical channel.

If there are any QoS commitments or modes such as sniff mode on the original logical transports, then these are not preserved after a role switch. These must be renegotiated after the role switch has completed.

Acronyms & Abbreviations

1.2

1 LIST OF ACRONYMS AND ABBREVIATIONS

Acronym or abbreviation	Writing out in full	Which means
A		
ACK	Acknowledge	
ACL	Asynchronous Connection-oriented [logical transport]	Reliable or time-bounded, bi-directional, point-to-point.
ACL-C	ACL Control [logical link] (LMP)	
ACL-U	ACL User [logical link] (L2CAP)	
ACO	Authenticated Ciphering Offset	
AFH	Adaptive Frequency Hopping	
AG	Audio Gateway	
AHS	Adapted Hop Sequence	
AR_ADDR	Access Request Address	
ARQ	Automatic Repeat reQuest	
ASB	Active Slave Broadcast [logical transport]	Unreliable, uni-directional broadcast to any devices synchronised with the physical channel.
ASB-U	ASB User [logical link] (L2CAP)	
B		
BB	BaseBand	
BCH	Bose, Chaudhuri & Hocquenghem	Type of code The persons who discovered these codes in 1959 (H) and 1960 (B&C)
BD_ADDR	Bluetooth Device Address	
BER	Bit Error Rate	
BT	Bandwidth Time	
BT	Bluetooth	
C		
CAC	Channel Access Code	
CC	Call Control	
CL	Connectionless	
CODEC	COder DECoder	

Table 1.1: Acronyms and Abbreviations.

Acronym or abbreviation	Writing out in full	Which means
COF	Ciphering Offset	
CRC	Cyclic Redundancy Check	
CVSD	Continuous Variable Slope Delta Modulation	
D		
DAC	Device Access Code	
DCE	Data Communication Equipment	
DCE	Data Circuit-Terminating Equipment	In serial communications, DCE refers to a device between the communication endpoints whose sole task is to facilitate the communications process; typically a modem
DCI	Default Check Initialization	
DH	Data-High Rate	Data packet type for high rate data
DIAC	Dedicated Inquiry Access Code	
DM	Data - Medium Rate	Data packet type for medium rate data
DTE	Data Terminal Equipment	In serial communications, DTE refers to a device at the endpoint of the communications path; typically a computer or terminal.
DTMF	Dual Tone Multiple Frequency	
DUT	Device Under Test	
DV	Data Voice	Data packet type for data and voice
E		
eSCO	Extended Synchronous Connection Oriented [logical transport]	Bi-directional, symmetric or asymmetric, point-to-point, general regular data, limited retransmission.
eSCO-S	Stream eSCO (unframed)	used to support isochronous data delivered in a stream without framing
ETSI	European Telecommunications Standards Institute	

Table 1.1: Acronyms and Abbreviations.

Acronym or abbreviation	Writing out in full	Which means
F		
FCC	Federal Communications Commission	
FEC	Forward Error Correction code	
FH	Frequency Hopping	
FHS	Frequency Hop Synchronization	
FIFO	First In First Out	
FSK	Frequency Shift Keying	type of modulation
FW	Firmware	
G		
GFSK	Gaussian Frequency Shift Keying	
GIAC	General Inquiry Access Code	
GM	Group Management	
H		
HCI	Host Controller Interface	
HEC	Header-Error-Check	
HID	Human Interface Device	
HV	High quality Voice	e.g. HV1 packet
HW	Hardware	
I		
IAC	Inquiry Access Code	
IEEE	Institute of Electronic and Electrical Engineering	
IETF	Internet Engineering Task Force	
IP	Internet Protocol	
IrDA	Infra-red Data Association	
IrMC	Ir Mobile Communications	
ISDN	Integrated Services Digital Net-works	
ISM	Industrial, Scientific, Medical	
IUT	Implementation Under Test	

Table 1.1: Acronyms and Abbreviations.

Acronym or abbreviation	Writing out in full	Which means
L		
L2CAP	Logical Link Control and Adaptation Protocol	
LAP	Lower Address Part	
LC	Link Controller	Link Controller (or baseband) part of the Bluetooth protocol stack. Low level Baseband protocol handler
LC	Link Control [logical link]	The control logical links LC and ACL-C are used at the link control level and link manager level, respectively.
LCP	Link Control Protocol	
LCSS	Link Controller Service Signalling	
LFSR	Linear Feedback Shift Register	
LLID	Logical Link Identifier	
LM	Link Manager	
LMP	Link Manager Protocol	For LM peer to peer communica-tion
LSB	Least Significant Bit	
LT_ADDR	Logical Transport ADDRess	
M		
M	Master or Mandatory	
MAC	Medium Access Control	
MAPI	Messaging Application Procedure Interface	
MMI	Man Machine Interface	
MS	Mobile Station	
MS	Multiplexing sublayer	
MSB	Most Significant Bit	
MSC	Message Sequence Chart	
MTU	Maximum Transmission Unit	
N		
NAK	Negative Acknowledge	

Table 1.1: Acronyms and Abbreviations.

Acronym or abbreviation	Writing out in full	Which means
NAP	Non-significant Address Part	
O		
O	Optional	
OBEX	OBject EXchange protocol	
OCF	OpCode Command Field	
OGF	OpCode Group Field	
P		
PCM	Pulse Coded Modulation	
PCMCIA	Personal Computer Memory Card International Association	
PDU	Protocol Data Unit	a message
PIN	Personal Identification Number	
PM_ADDR	Parked Member Address	
PN	Pseudo-random Noise	
PPM	Part Per Million	
PPP	Point-to-Point Protocol	
PRBS	Pseudo Random Bit Sequence	
PRNG	Pseudo Random Noise Generation	
PSB	Parked Slave Broadcast [logical transport]	Unreliable, uni-directional broadcast to all piconet devices.
PSB-C	PSB Control [logical link] (LMP)	
PSB-U	PSB User [logical link] (L2CAP)	
PSTN	Public Switched Telephone Network	
Q		
QoS	Quality of Service	
R		
RAND	Random number	
RF	Radio Frequency	
RFC	Request For Comments	
RFCMode	Retransmission and Flow Control Mode	

Table 1.1: Acronyms and Abbreviations.

Acronym or abbreviation	Writing out in full	Which means
RFCOMM		Serial cable emulation protocol based on ETSI TS 07.10
RSSI	Received Signal Strength Indication	
RX	Receive	
S		
S	Slave	
SAP	Service Access Points	
SAR	Segmentation and Reassembly	
SCO	Synchronous Connection-Oriented [logical transport]	Bi-directional, symmetric, point-to-point, AV channels.
SCO-S	Stream SCO (unframed)	
SCO-S	Synchronous logical link	used to support isochronous data delivered in a stream without framing
SD	Service Discovery	
SDDB	Service Discovery Database	
SDP	Service Discovery Protocol	
SDU	Service Data Unit	
SEQN	Sequential Numbering scheme	
SRES	Signed Response	
SS	Supplementary Services	
SSI	Signal Strength Indication	
SUT	System Under Test	
SW	Software	
T		
TBD	To Be Defined	
TC	Test Control	Test Control layer for the test interface
TCI	Test Control Interface	
TCP/IP	Transport Control Protocol/Internet Protocol	
TCS	Telephony Control protocol Specification	

Table 1.1: Acronyms and Abbreviations.

Acronym or abbreviation	Writing out in full	Which means
TDD	Time-Division Duplex	
TX	Transmit	
U		
UAP	Upper Address Part	
UART	Universal Asynchronous receiver Transmitter	
UI	User Interface	
UI	Unnumbered Information	
ULAP	Upper and Lower Address Parts	
USB	Universal Serial Bus	
UUID	Universal Unique Identifier	
W		
WAP	Wireless Application Protocol	
WUG	Wireless User Group	

Table 1.1: Acronyms and Abbreviations.

2 ABBREVIATIONS OF THE SPECIFICATION NAMES

Acronym or abbreviation	Writing out in full	Placement in Specification
A2DP	Advanced Audio Distribution Profile Specification	vol 10 part C
AVCTP	A/V Control Transport Protocol Specification	vol 10 part F
AVDTP	A/V Distribution Transport Profile Specification	vol 10 part A
AVRCP	A/V Remote Control Profile Specification	vol 10 part G
BB	Baseband Specification	vol 2 part B
BIP	Basic Imaging Profile	vol 8 part E
BNEP	Bluetooth Network Encapsulation Protocol Specification	vol 6 part A
BPP	Basic Printing Profile Specification	vol 8 part F
CIP	Common ISDN Access Profile Specification	vol 12 part A
CTP	Cordless Telephony Profile Specification	vol 9 part B
DUN	Dial-Up Networking Profile Specification	vol 7 part C
ESDP / UPNP	Extended Service Discovery Profile	vol 6 part D
FAX	Fax Profile Specification	vol 7 part D
FTP	File Transfer Profile Specification	vol 8 part C
GAP	Generic Access Profile Specification	vol 3 part C
GAVDP	Generic A/V Distribution Profile Specification	vol 10 part B
GOEP	Generic Object Exchange Profile Specification	vol 8 part A
HCI (1)	Host Controller Interface Functional Specification	vol 2 part E
HCI (2)	Host Controller Interface Transport Layers Specification	vol 4 part A-C
HCRP	Hardcopy Cable Replacement Profile Specification	vol 11 part B
HFP	Hands-Free Profile Specification	vol 7 part E
HID	Human Interface Device Profile Specification	vol 11 part A
HSP	Headset Profile Specification	vol 7 part F
ICP	Intercom Profile Specification	vol 9 part C
L2CAP	Logical Link Control and Adaptation Protocol Specification	vol 3 part A
LAP	LAN Access Profile Specification	deprecated

Table 2.1: Abbreviations of the specification names.

Acronym or abbreviation	Writing out in full	Placement in Specification
LMP	Link Manager Protocol Specification	vol 2 part C
MSC	Message Sequence Charts	vol 2 part F
OPP	Object Push Profile Specification	vol 8 part B
PAN	Personal Area Networking Profile Specification	vol 6 part B
RF	Radio Specification	vol 2 part A
RFCOMM	RFCOMM with TS 07.10	vol 7 part A
SAP	SIM Access Profile Specification	vol 12 part C
SDAP	Service Discovery Application Profile Specification	vol 5 part B
SDP (1)	Service Discovery Protocol Specification (server)	vol 3 part B
SDP (2)	Service Discovery Protocol Specification (client)	vol 5 part A
SPP	Serial Port Profile Specification	vol 7 part B
Synch	Synchronization Profile Specification	vol 8 part D
TCI	Test Control Interface	vol 3 part D, section 2
TCP	Telephony Control Protocol Specification	vol 9 part A
UDI	Unrestricted Digital Information Profile Specification	vol 12 part B

Table 2.1: Abbreviations of the specification names.

Architecture & Terminology Overview
Part C

Changes from Bluetooth Specification v 1.1

1.2

CONTENTS

Contents **69**

1 New Features **71**

2 Changes in Wording **73**

2.1 IEEE Language Update 73

2.1.1 Shall 74

2.1.2 Must 74

2.1.3 Will 74

2.1.4 Should 74

2.1.5 May 75

2.1.6 Can 75

2.2 Nomenclature Changes 75

3 Structure Changes **77**

4 Deprecated Specifications **79**

4.1 Deprecated Features 79

4.2 Deprecated Profiles 79

1 NEW FEATURES

Several new features are introduced in the Bluetooth Core Specification 1.2. The major areas of improvement are:

- Architectual overview
- Faster connection
- Adaptive frequency hopping
- Extended SCO links
- Enhanced error detection and flow control
- Enhanced synchronization capability
- Enhanced flow specification

The feature descriptions are incorporated into the existing text in different core parts, described in vol2 and vol3.

2 CHANGES IN WORDING

Two general classes of changes to the wording of the Bluetooth Specification have been done for version 1.2. They are a formalization of the language by using conventions established by the Institute of Electrical and Electronic Engineers (IEEE), and a regularization of Bluetooth wireless technology-specific terms.

2.1 IEEE LANGUAGE UPDATE

The purpose of changing terms used to decribe attributes of the Specification is to make it easy for the reader to identify text that decribes requirements as opposed to background information. The general term for text that describes attributes that are required for proper implementation of Bluetooth wireless technology is Nomative. The general term for language that provides background and context for normative text is "informative". These terms have been added to various sections to clarify implementation requirements.

Many portions of the Bluetooth Specification use imprecise or inaccurate terms to describe attributes of the protocol. This subsection describes the correct usage of key terms that indicate degree of requirements for processes and data structures. The information here was derived from the IEEE Style Guide, see http://standards.ieee.org/guides/style/.

The following list is a summary of the terms to be discussed in more detail below:

shall	is required to – used to define requirements
must	is a natural consequence of -- used only to describe unavoidable situations
will	it is true that -- only used in statements of fact
should	is recommended that – used to indicate that among several possibilities one is recommended as particularly suitable, but not required
may	is permitted to – used to allow options
can	is able to – used to relate statements in a causal fashion
is	is defined as – used to further explain elements that are previously required or allowed
note	<informational text ONLY>

For clarity of the definition of those terms, the following sections document why and how they are used. For these sections only, the IEEE terms are italicized to indicate their use as a noun. Uses and examples of the use of the terms in this section are underlined.

2.1.1 Shall

The word *shall* is used to indicate mandatory requirements strictly that shall be followed in order to conform to the specification and from which no deviation is permitted.

There is a strong implication that the presence of the word *shall* indicates a testable requirement. All testable requirements shall be reflected in the Protocol Implementation Conformance Statement (PICS). In turn, all PICS indicators should be reflected in the Test Cases (TCs) either directly or indirectly.

A direct reference is a specific test for the attribute cited in the text. For example, a minimum value for a given parameter may be an entry in the TCs. Indirect test coverage may be appropriate if the existence of the attribute is requisite for passing a higher level test.

2.1.2 Must

The word *must* shall not be used when stating mandatory requirements. *Must* is used only to describe unavoidable situations and is seldom appropriate for the text of a Specification.

An example of an appropriate use of the term *must* is: “the Bluetooth radios must be in range of each other to communicate”.

2.1.3 Will

The use of the word *will* shall not be used when stating mandatory requirements. The term *will* is only used in statements of fact. As with the term *must*, *will* is not generally applicable to the description of a protocol. An example of appropriate use of will is: “when power is removed from the radio, it can be assumed that communications will fail”

2.1.4 Should

Should equals *is recommended that*. The word *should* is used to indicate that among several possibilities one is recommended as particularly suitable without mentioning or excluding others. Alternatively it may indicate that a certain course of action is preferred but not necessarily required. Finally, in the negative form, it indicates a certain course of action is deprecated but not prohibited.

In the Bluetooth Specification the term designates an optional attribute that may require an entry in the PICS.

Explicit specification of alternatives should be done when using *should*.

2.1.5 May

The word *may* is used to indicate a course of action permissible within the limits of the specification. The term *may* equals *is permitted*. This is generally used when there is a single, optional attribute described, but multiple alternatives may be cited.

The use of *may* implies an optional condition in the PICS and therefore may need to be reflected in the corresponding test cases.

2.1.6 Can

The word *can* is used for statements of possibility and capability, whether material, physical, or causal. The term *can* equals *is able to*.

The term *can* shall be used only in informative text. It describes capabilities by virtue of the rules established by normative text.

2.2 NOMENCLATURE CHANGES

The nomenclature in Bluetooth 1.2 has also been updated due to new concepts that are introduced together with the new features and the new architecture (see [Part A] Section 1.2 on page 15).

3 STRUCTURE CHANGES

The Bluetooth Core Specification 1.2 has been significantly restructured for better consistency and readability. The most important structure changes have been performed in Baseband, LMP, HCI and L2CAP. The text in these sections has been rearranged to provide:

- Presentation of the information in a more logical progression
- Removal of redundant text and requirements
- Consolidation of baseband related requirements (for example, the *Baseband Timers* and *Bluetooth Audio* sections into the Baseband Specification)
- Alignment of the specification with the new architecture and terminology presented in the Architecture Overview (see Part A on page 9)

In addition, new text and requirements have been added for the new features as well as many changes throughout the specification to update the text to use IEEE language (see Section 2 on page 73).

4 DEPRECATED SPECIFICATIONS

As the Bluetooth Specification continues to evolve, some features, protocols, and profiles are replaced with new ways of performing the same function. Often these changes reflect the evolution of the communications industry. Some of the changes merely reflect an evolved understanding of the Bluetooth environment itself.

Those functions no longer recommended are being deprecated. The term *deprecation* does not mean that they are no longer allowed, but that they are no longer recommended as the best way of performing a given function.

Specifications that have been deprecated will not be included in the updated Bluetooth Specifications, but the earlier versions are still available and may be used according to the rules set forth in the Qualification Policy (PRD).

4.1 DEPRECATED FEATURES

Features deprecated in version 1.2 are:

- The use of Unit Keys for security
- Optional Paging schemes
- 23 channel hopping sequence

4.2 DEPRECATED PROFILES

For the release of Bluetooth Specification 1.2, the deprecated profiles are:

- LAN Access Profile (LAP)
- Portions of WAP over LAP
- ESDP over L2CAP and LAP

Specification of the Bluetooth System

Wireless connections made easy

Core System Package
[Controller volume]

Version 1.2
05 November 2003

1.2

Bluetooth®

Revision History

The Revision History is shown in the “Appendix” on page 53[vol. 0].

Contributors

The persons who contributed to this specification are listed in the “Appendix” on page 53[vol. 0].

Web Site

This specification can also be found on the official Bluetooth website: http://www.bluetooth.com

Disclaimer and Copyright Notice

The copyright in these specifications is owned by the Promoter Members of Bluetooth SIG, Inc. (“Bluetooth SIG”). Use of these specifications and any related intellectual property (collectively, the “Specification”), is governed by the Promoters Membership Agreement among the Promoter Members and Bluetooth SIG (the “Promoters Agreement”), certain membership agreements between Bluetooth SIG and its Adopter and Associate Members (the “Membership Agreements”) and the Bluetooth Specification Early Adopters Agreements (“1.2 Early Adopters Agreements”) among Early Adopter members of the unincorporated Bluetooth special interest group and the Promoter Members (the “Early Adopters Agreement”). Certain rights and obligations of the Promoter Members under the Early Adopters Agreements have been assigned to Bluetooth SIG by the Promoter Members.

Use of the Specification by anyone who is not a member of Bluetooth SIG or a party to an Early Adopters Agreement (each such person or party, a “Member”), is prohibited. The legal rights and obligations of each Member are governed by their applicable Membership Agreement, Early Adopters Agreement or Promoters Agreement. No license, express or implied, by estoppel or otherwise, to any intellectual property rights are granted herein.

Any use of the Specification not in compliance with the terms of the applicable Membership Agreement, Early Adopters Agreement or Promoters Agreement is prohibited and any such prohibited use may result in termination of the applicable Membership Agreement or Early Adopters Agreement and other liability permitted by the applicable agreement or by applicable law to Bluetooth SIG or any of its members for patent, copyright and/or trademark infringement.

THE SPECIFICATION IS PROVIDED “AS IS” WITH NO WARRANTIES WHATSOEVER, INCLUDING ANY WARRANTY OF MERCHANTABILITY, NONINFRINGEMENT, FITNESS FOR ANY PARTICULAR PURPOSE, SATISFACTORY QUALITY, OR REASONABLE SKILL OR CARE, OR ANY WARRANTY ARISING OUT OF ANY COURSE OF DEALING, USAGE, TRADE PRACTICE, PROPOSAL, SPECIFICATION OR SAMPLE.

Each Member hereby acknowledges that products equipped with the Bluetooth® technology (“Bluetooth® Products”) may be subject to various regulatory controls under the laws and regulations of various governments worldwide. Such laws and regulatory controls may govern, among other things, the combination, operation, use, implementation and distribution of Bluetooth® Products. Examples of such laws and regulatory controls include, but are not limited to, airline regulatory controls, telecommunications regulations, technology transfer controls and health and safety regulations. Each Member is solely responsible for the compliance by their Bluetooth® Products with any such laws and regulations and for obtaining any and all required authorizations, permits, or licenses for their Bluetooth® Products related to such regulations within the applicable jurisdictions. Each Member acknowledges that nothing in the Specification provides any information or assistance in connection with securing such compliance, authorizations or licenses. NOTHING IN THE SPECIFICATION CREATES ANY WARRANTIES, EITHER EXPRESS OR IMPLIED, REGARDING SUCH LAWS OR REGULATIONS.

ALL LIABILITY, INCLUDING LIABILITY FOR INFRINGEMENT OF ANY INTELLECTUAL PROPERTY RIGHTS OR FOR NONCOMPLIANCE WITH LAWS, RELATING TO USE OF THE SPECIFICATION IS EXPRESSLY DISCLAIMED. BY USE OF THE SPECIFICATION, EACH MEMBER EXPRESSLY WAIVES ANY CLAIM AGAINST BLUETOOTH SIG AND ITS PROMOTER MEMBERS RELATED TO USE OF THE SPECIFICATION.

Bluetooth SIG reserves the right to adopt any changes or alterations to the Specification as it deems necessary or appropriate and to adopt a process for adding new Bluetooth® profiles after the release of the Specification.

Copyright © 1999, 2000, 2001, 2002, 2003

Agere Systems, Inc.,
Ericsson Technology Licensing, AB,
IBM Corporation,
Intel Corporation,
Microsoft Corporation,
Motorola, Inc.,
Nokia Corporation,
Toshiba Corporation

*Third-party brands and names are the property of their respective owners.

TABLE OF CONTENTS

Part A
RADIO SPECIFICATION

Contents **27**

1 Scope **29**

2 Frequency Bands and Channel Arrangement **31**

3 Transmitter Characteristics **33**

3.1 Modulation Characteristics 34

3.2 Spurious Emissions 35

3.2.1 In-band spurious emission 35

3.3 Radio Frequency Tolerance 36

4 Receiver Characteristics **37**

4.1 Actual Sensitivity Level 37

4.2 Interference Performance 37

4.3 Out-of-Band Blocking 38

4.4 Intermodulation Characteristics 38

4.5 Maximum Usable Level 39

4.6 Receiver Signal Strength Indicator 39

4.7 Reference Signal Definition 39

5 Appendix A **41**

6 Appendix B **43**

Part B
BASEBAND SPECIFICATION

Contents **47**

1 General Description **53**
1.1 Bluetooth Clock 54
1.2 Bluetooth Device Addressing 55
1.2.1 Reserved addresses 55
1.3 Access Codes 56

2 Physical Channels **57**
2.1 Physical Channel Definition 58
2.2 Basic Piconet Physical Channel 58
2.2.1 Master-slave definition 58
2.2.2 Hopping characteristics 59
2.2.3 Time slots 59
2.2.4 Piconet clocks 60
2.2.5 Transmit/receive timing 60
2.3 Adapted Piconet Physical Channel 63
2.3.1 Hopping characteristics 63
2.4 Page Scan Physical Channel 64
2.4.1 Clock estimate for paging 64
2.4.2 Hopping characteristics 64
2.4.3 Paging procedure timing 65
2.4.4 Page response timing 66
2.5 Inquiry Scan Physical Channel 68
2.5.1 Clock for inquiry 68
2.5.2 Hopping characteristics 68
2.5.3 Inquiry procedure timing 68
2.5.4 Inquiry response timing 68
2.6 Hop Selection 70
2.6.1 General selection scheme 70
2.6.2 Selection kernel 74
2.6.3 Adapted hop selection kernel 77
2.6.4 Control word 78

3 Physical Links **83**
3.1 Link Supervision 83

4 Logical Transports 85
4.1 General 85
4.2 Logical Transport Address (LT_ADDR) 85
4.3 Synchronous Logical Transports 86
4.4 Asynchronous Logical Transport 86
4.5 Transmit/Receive Routines 87
4.5.1 TX Routine 87
4.5.2 RX routine 90
4.5.3 Flow control 91
4.6 Active Slave Broadcast Transport 92
4.7 Parked Slave Broadcast Transport 93
4.7.1 Parked member address (PM_ADDR) 93
4.7.2 Access request address (AR_ADDR) 93
5 Logical Links 95
5.1 Link Control Logical Link (LC) 95
5.2 ACL Control Logical Link (ACL-C) 95
5.3 User Asynchronous/Isochronous Logical Link (ACL-U) 95
5.3.1 Pausing the ACL-U logical link 96
5.4 User Synchronous Data Logical Link (SCO-S) 96
5.5 User Extended Synchronous Data Logical Link (eSCO-S) 96
5.6 Logical Link Priorities 96
6 Packets 97
6.1 General Format 97
6.2 Bit Ordering 97
6.3 Access Code 98
6.3.1 Access code types 98
6.3.2 Preamble 99
6.3.3 Sync word 99
6.3.4 Trailer 102
6.4 Packet Header 103
6.4.1 LT_ADDR 103
6.4.2 TYPE 103
6.4.3 FLOW 104
6.4.4 ARQN 104
6.4.5 SEQN 104
6.4.6 HEC 104

6.5 Packet Types 105
6.5.1 Common packet types 106
6.5.2 SCO packets 109
6.5.3 eSCO packets 110
6.5.4 ACL packets 111
6.6 Payload Format 112
6.6.1 Synchronous data field 112
6.6.2 Asynchronous data field 113
6.7 Packet Summary 116
7 Bitstream Processesing 117
7.1 Error Checking 118
7.1.1 HEC generation 118
7.1.2 CRC generation 119
7.2 Data Whitening 121
7.3 Error Correction 122
7.4 FEC Code: Rate 1/3 122
7.5 FEC Code: Rate 2/3 123
7.6 ARQ Scheme 124
7.6.1 Unnumbered ARQ 124
7.6.2 Retransmit filtering 127
7.6.3 Flushing payloads 130
7.6.4 Multi-slave considerations 130
7.6.5 Broadcast packets 130
8 Link Controller Operation 133
8.1 Overview of States 133
8.2 Standby State 134
8.3 Connection Establishment Substates 134
8.3.1 Page scan substate 134
8.3.2 Page substate 136
8.3.3 Page response substates 139
8.4 Device Discovery Substates 143
8.4.1 Inquiry scan substate 144
8.4.2 Inquiry substate 145
8.4.3 Inquiry response substate 146
8.5 Connection State 148

8.6 Active Mode 149
8.6.1 Polling in the active mode 150
8.6.2 SCO 150
8.6.3 eSCO 151
8.6.4 Broadcast scheme 154
8.6.5 Role switch 155
8.6.6 Scatternet 157
8.6.7 Hop sequence switching 158
8.6.8 Channel classificaition and channel map selection ...161
8.6.9 Power Management 162
8.7 Sniff Mode 163
8.7.1 Sniff Transition Mode 164
8.8 Hold Mode 165
8.9 Park State 165
8.9.1 Beacon train 166
8.9.2 Beacon access window 168
8.9.3 Parked slave synchronization 169
8.9.4 Parking 170
8.9.5 Master-initiated unparking 171
8.9.6 Slave-initiated unparking 171
8.9.7 Broadcast scan window 172
8.9.8 Polling in the park state 172

9 Audio 173
9.1 LOG PCM CODEC 173
9.2 CVSD CODEC 173
9.3 Error Handling 176
9.4 General Audio Requirements 176
9.4.1 Signal levels 176
9.4.2 CVSD audio quality 176

10 List of Figures 177

11 List of Tables 181

Appendix A:
General Audio Recommendations 182

Appendix B:
Timers 185

Appendix C: ....
Recommendations for AFH Operation in Park, Hold and Sniff 187

Part C
LINK MANAGER PROTOCOL

Contents **191**

1 Introduction **195**

2 General Rules **197**
2.1 Message Transport 197
2.2 Synchronization 197
2.3 Packet Format 198
2.4 Transactions 199
2.4.1 LMP Response Timeout 200
2.5 Error Handling 200
2.5.1 Transaction collision resolution 201
2.6 Procedure Rules 201
2.7 General Response Messages 202
2.8 Specification Writing Policies 202

3 Device Features **203**
3.1 General Description 203
3.2 Feature Definitions 203
3.3 Feature Mask Definition 207
3.4 Link Manager Interoperability policy 208

4 Procedure Rules **209**
4.1 Connection Control 209
4.1.1 Connection establishment 209
4.1.2 Detach 210
4.1.3 Power control 211
4.1.4 Adaptive frequency hopping 213
4.1.5 Channel classification 216
4.1.6 Link supervision 218
4.1.7 Channel quality driven data rate change (CQDDR) 219
4.1.8 Quality of service (QoS) 220
4.1.9 Paging scheme parameters 222
4.1.10 Control of multi-slot packets 223
4.2 Security 224
4.2.1 Authentication 224
4.2.2 Pairing 226
4.2.3 Change link key 229
4.2.4 Change current link key type 230
4.2.5 Encryption 232
4.2.6 Request supported encryption key size 236

4.3 Informational Requests 237
4.3.1 Timing accuracy 237
4.3.2 Clock offset 238
4.3.3 LMP version 238
4.3.4 Supported features 239
4.3.5 Name request 241
4.4 Role Switch 242
4.4.1 Slot offset 242
4.4.2 Role switch 243
4.5 Modes of Operation 245
4.5.1 Hold mode 245
4.5.2 Park state 247
4.5.3 Sniff mode 253
4.6 Logical Transports 256
4.6.1 SCO logical transport 256
4.6.2 eSCO logical transport 259
4.7 Test Mode 264
4.7.1 Activation and deactivation of test mode 264
4.7.2 Control of test mode 265
4.7.3 Summary of test mode PDUs 266
5 Summary 269
5.1 PDU Summary 269
5.2 Parameter Definitions 277
5.3 Default Values 284
6 List of Figures 285
7 List of Tables 289

Part D
ERROR CODES

Contents **293**

1 Overview of Error Codes **295**
1.1 Usage Descriptions 295
1.2 HCI Command Errors 295
1.3 List of Error Codes 296

2 Error Code Descriptions **299**
2.1 Unknown HCI Command (0X01) 299
2.2 Unknown Connection Identifier (0X02) 299
2.3 Hardware Failure (0X03) 299
2.4 Page Timeout (0X04) 299
2.5 Authentication Failure (0X05) 299
2.6 PIN Missing (0X06) 299
2.7 Memory Capacity Exceeded (0X07) 299
2.8 Connection Timeout (0X08) 300
2.9 Connection Limit Exceeded (0X09) 300
2.10 Synchronous Connection Limit to a Device Exceeded (0X0A) 300
2.11 ACL Connection Already Exists (0X0B) 300
2.12 Command Disallowed (0X0C) 300
2.13 Connection Rejected due to Limited Resources (0X0D) 300
2.14 Connection Rejected due to Security Reasons (0X0E) 300
2.15 Connection Rejected due to Unacceptable BD_ADDR (0X0F) 301
2.16 Connection Accept Timeout Exceeded (0X10) 301
2.17 Unsupported Feature or Parameter Value (0X11) 301
2.18 Invalid HCI Command Parameters (0X12) 301
2.19 Remote User Terminated Connection (0X13) 301
2.20 Remote Device Terminated Connection due to Low Resources (0X14) 302
2.21 Remote Device Terminated Connection due to Power Off (0X15) 302
2.22 Connection Terminated by Local Host (0X16) 302
2.23 Repeated Attempts (0X17) 302
2.24 Pairing not Allowed (0X18) 302
2.25 Unknown LMP PDU (0X19) 302
2.26 Unsupported Remote Feature (0X1A) 302
2.27 SCO Offset Rejected (0X1B) 302
2.28 SCO Interval Rejected (0X1C) 303
2.29 SCO Air Mode Rejected (0X1D) 303
2.30 INvalid LMP Parameters (0X1E) 303
2.31 Unspecified Error (0X1F) 303
2.32 Unsupported LMP Parameter Value (0X20) 303

2.33 Role Change Not Allowed (0X21) 303
2.34 LMP Response Timeout (0X22) 303
2.35 LMP Error Transaction Collision (0X23) 304
2.36 LMP PDU Not Allowed (0X24) 304
2.37 Encryption Mode Not Acceptable (0X25) 304
2.38 Link Key Can Not be Changed (0X26) 304
2.39 Requested Qos is Not Supported (0X27) 304
2.40 Instant Passed (0X28) 304
2.41 Pairing with Unit Key Not Supported (0X29) 304
2.42 DIFFERENT TRANSACTION COLLISION (0X2A) 304
2.43 QoS Unacceptable Parameter (0X2C) 304
2.44 QoS Rejected (0X2D) 305
2.45 Channel Classification Not Supported (0X2E) 305
2.46 Insufficient Security (0X2F) 305
2.47 Parameter out of Mandatory Range (0X30) 305
2.48 Role Switch Pending (0X32) 305
2.49 Reserved Slot Violation (0X34) 305
2.50 Role Switch Failed (0X35) 305

Part E

HOST CONTROLLER INTERFACE FUNCTIONAL SPECIFICATION

Contents **309**

1 Introduction **317**
1.1 Lower Layers of the Bluetooth Software Stack 317

2 Overview of Host Controller Transport Layer **319**

3 Overview of Commands and Events **321**
3.1 Generic Events 322
3.2 Device Setup 322
3.3 Controller Flow Control 323
3.4 Controller Information 323
3.5 Controller Configuration 324
3.6 Device Discovery 325
3.7 Connection Setup 327
3.8 Remote Information 329
3.9 Synchronous Connections 330
3.10 Connection State 331
3.11 Piconet Structure 332
3.12 Quality of Service 333
3.13 Physical Links 334
3.14 Host Flow Control 335
3.15 Link Information 336
3.16 Authentication and Encryption 337
3.17 Testing 339
3.18 Alphabetical List of Commands and Events 340

4 HCI Flow Control **345**
4.1 Host to Controller Data Flow Control 345
4.2 Controller to Host Data Flow Control 346
4.3 Disconnection Behaviour 347
4.4 Command Flow Control 347
4.5 Command Error Handling 348

5 HCI Data Formats 349
5.1 Introduction 349
5.2 Data and Parameter Formats 349
5.3 Connection Handles 350
5.4 Exchange of HCI-Specific Information 351
5.4.1 HCI Command Packet 351
5.4.2 HCI ACL Data Packets 353
5.4.3 HCI Synchronous Data Packets 355
5.4.4 HCI Event Packet 356
6 HCI Configuration Parameters 357
6.1 Scan Enable 357
6.2 Inquiry Scan Interval 357
6.3 Inquiry Scan Window 358
6.4 Inquiry Scan Type 358
6.5 Inquiry Mode 358
6.6 Page Timeout 359
6.7 Connection Accept Timeout 359
6.8 Page Scan Interval 360
6.9 Page Scan Window 360
6.10 Page Scan Period Mode 360
6.11 Page Scan Type 361
6.12 Voice Setting 361
6.13 PIN Type 362
6.14 Link Key 362
6.15 Authentication Enable 362
6.16 Encryption Mode 363
6.17 Failed Contact Counter 364
6.18 Hold Mode Activity 364
6.19 Link Policy Settings 365
6.20 Flush Timeout 366
6.21 Num Broadcast Retransmissions 366
6.22 Link Supervision Timeout 367
6.23 Synchronous Flow Control Enable 367
6.24 Local Name 368
6.25 Class Of Device 368
6.26 Supported Commands 369

7 HCI Commands and Events 373
7.1 Link Control Commands 373
7.1.1 Inquiry Command 373
7.1.2 Inquiry Cancel Command 375
7.1.3 Periodic Inquiry Mode Command 376
7.1.4 Exit Periodic Inquiry Mode Command 379
7.1.5 Create Connection Command 380
7.1.6 Disconnect Command 383
7.1.7 Create Connection Cancel Command 384
7.1.8 Accept Connection Request Command 386
7.1.9 Reject Connection Request Command 388
7.1.10 Link Key Request Reply Command 389
7.1.11 Link Key Request Negative Reply Command 391
7.1.12 PIN Code Request Reply Command 392
7.1.13 PIN Code Request Negative Reply Command 394
7.1.14 Change Connection Packet Type Command 395
7.1.15 Authentication Requested Command 398
7.1.16 Set Connection Encryption Command 399
7.1.17 Change Connection Link Key Command 400
7.1.18 Master Link Key Command 401
7.1.19 Remote Name Request Command 402
7.1.20 Remote Name Request Cancel Command 404
7.1.21 Read Remote Supported Features Command 405
7.1.22 Read Remote Extended Features Command 406
7.1.23 Read Remote Version Information Command 407
7.1.24 Read Clock Offset Command 408
7.1.25 Read LMP Handle Command 409
7.1.26 Setup Synchronous Connection Command 411
7.1.27 Accept Synchronous Connection Request Command 415
7.1.28 Reject Synchronous Connection Request Command. 419

7.2 Link Policy Commands....420
7.2.1 Hold Mode Command....420
7.2.2 Sniff Mode Command....422
7.2.3 Exit Sniff Mode Command....425
7.2.4 Park State Command....426
7.2.5 Exit Park State Command....428
7.2.6 QoS Setup Command....429
7.2.7 Role Discovery Command....431
7.2.8 Switch Role Command....432
7.2.9 Read Link Policy Settings Command....433
7.2.10 Write Link Policy Settings Command....434
7.2.11 Read Default Link Policy Settings Command....436
7.2.12 Write Default Link Policy Settings Command....437
7.2.13 Flow Specification Command....438
7.3 Controller & Baseband Commands....440
7.3.1 Set Event Mask Command....440
7.3.2 Reset Command....442
7.3.3 Set Event Filter Command....443
7.3.4 Flush Command....448
7.3.5 Read PIN Type Command....450
7.3.6 Write PIN Type Command....451
7.3.7 Create New Unit Key Command....452
7.3.8 Read Stored Link Key Command....453
7.3.9 Write Stored Link Key Command....454
7.3.10 Delete Stored Link Key Command....456
7.3.11 Write Local Name Command....457
7.3.12 Read Local Name Command....458
7.3.13 Read Connection Accept Timeout Command....459
7.3.14 Write Connection Accept Timeout Command....460
7.3.15 Read Page Timeout Command....461
7.3.16 Write Page Timeout Command....462
7.3.17 Read Scan Enable Command....463
7.3.18 Write Scan Enable Command....464
7.3.19 Read Page Scan Activity Command....465
7.3.20 Write Page Scan Activity Command....467
7.3.21 Read Inquiry Scan Activity Command....468
7.3.22 Write Inquiry Scan Activity Command....469
7.3.23 Read Authentication Enable Command....470

7.3.24 Write Authentication Enable Command 471
7.3.25 Read Encryption Mode Command 472
7.3.26 Write Encryption Mode Command 473
7.3.27 Read Class of Device Command 474
7.3.28 Write Class of Device Command 475
7.3.29 Read Voice Setting Command 476
7.3.30 Write Voice Setting Command 477
7.3.31 Read Automatic Flush Timeout Command 478
7.3.32 Write Automatic Flush Timeout Command.....479
7.3.33 Read Num Broadcast Retransmissions Command.....480
7.3.34 Write Num Broadcast Retransmissions Command.....481
7.3.35 Read Hold Mode Activity Command 482
7.3.36 Write Hold Mode Activity Command 483
7.3.37 Read Transmit Power Level Command 484
7.3.38 Read Synchronous Flow Control Enable Command...486
7.3.39 Write Synchronous Flow Control Enable Command...487
7.3.40 Set Controller To Host Flow Control Command 488
7.3.41 Host Buffer Size Command.....489
7.3.42 Host Number Of Completed Packets Command 491
7.3.43 Read Link Supervision Timeout Command.....493
7.3.44 Write Link Supervision Timeout Command.....494
7.3.45 Read Number Of Supported IAC Command.....496
7.3.46 Read Current IAC LAP Command 497
7.3.47 Write Current IAC LAP Command 498
7.3.48 Read Page Scan Period Mode Command.....500
7.3.49 Write Page Scan Period Mode Command 501
7.3.50 Set AFH Host Channel Classification Command 502
7.3.51 Read Inquiry Scan Type Command 503
7.3.52 Write Inquiry Scan Type Command 504
7.3.53 Read Inquiry Mode Command 505
7.3.54 Write Inquiry Mode Command 506
7.3.55 Read Page Scan Type Command 507
7.3.56 Write Page Scan Type Command 508
7.3.57 Read AFH Channel Assessment Mode Command 509
7.3.58 Write AFH Channel Assessment Mode Command 510

7.4 Informational Parameters....512
7.4.1 Read Local Version Information Command....512
7.4.2 Read Local Supported Commands Command....514
7.4.3 Read Local Supported Features Command....515
7.4.4 Read Local Extended Features Command....516
7.4.5 Read Buffer Size Command....518
7.4.6 Read BD_ADDR Command....520
7.5 Status Parameters....521
7.5.1 Read Failed Contact Counter Command....521
7.5.2 Reset Failed Contact Counter Command....523
7.5.3 Read Link Quality Command....524
7.5.4 Read RSSI Command....525
7.5.5 Read AFH Channel Map Command....527
7.5.6 Read Clock Command....529
7.6 Testing Commands....531
7.6.1 Read Loopback Mode Command....531
7.6.2 Write Loopback Mode Command....532
7.6.3 Enable Device Under Test Mode Command....535
7.7 Events....537
7.7.1 Inquiry Complete Event....537
7.7.2 Inquiry Result Event....538
7.7.3 Connection Complete Event....540
7.7.4 Connection Request Event....541
7.7.5 Disconnection Complete Event....543
7.7.6 Authentication Complete Event....544
7.7.7 Remote Name Request Complete Event....545
7.7.8 Encryption Change Event....546
7.7.9 Change Connection Link Key Complete Event....547
7.7.10 Master Link Key Complete Event....548
7.7.11 Read Remote Supported Features Complete Event....549
7.7.12 Read Remote Version Information Complete Event....550
7.7.13 QoS Setup Complete Event....551
7.7.14 Command Complete Event....553
7.7.15 Command Status Event....554
7.7.16 Hardware Error Event....555
7.7.17 Flush Occurred Event....555
7.7.18 Role Change Event....556
7.7.19 Number Of Completed Packets Event....557

7.7.20 Mode Change Event 558
7.7.21 Return Link Keys Event..... 560
7.7.22 PIN Code Request Event 561
7.7.23 Link Key Request Event..... 562
7.7.24 Link Key Notification Event 563
7.7.25 Loopback Command Event..... 564
7.7.26 Data Buffer Overflow Event..... 564
7.7.27 Max Slots Change Event..... 565
7.7.28 Read Clock Offset Complete Event 566
7.7.29 Connection Packet Type Changed Event 567
7.7.30 QoS Violation Event 569
7.7.31 Page Scan Repetition Mode Change Event..... 570
7.7.32 Flow Specification Complete Event..... 571
7.7.33 Inquiry Result with RSSI Event 573
7.7.34 Read Remote Extended Features Complete Event 575
7.7.35 Synchronous Connection Complete Event 576
7.7.36 Synchronous Connection Changed event..... 578

8 List of Figures 581

9 List of Tables 583

Appendix A:
Deprecated Commands, Events and Configuration Parameters 585

Part F
MESSAGE SEQUENCE CHARTS

Contents **595**

1 Introduction **599**
1.1 Notation 599
1.2 Flow of Control 600
1.3 Example MSC 600

2 Services Without Connection Request **601**
2.1 Remote Name Request 601
2.2 One-time Inquiry 602
2.3 Periodic Inquiry 604

3 ACL Connection Establishment and Detachment **607**
3.1 Connection Setup 608

4 Optional Activities After ACL Connection Establishment **615**
4.1 Authentication Requested 615
4.2 Set Connection Encryption 616
4.3 Change Connection Link Key 617
4.4 Master Link Key 618
4.5 Read Remote Supported Features 620
4.6 Read Remote Extended Features 620
4.7 Read Clock Offset 621
4.8 Read Remote Version Information 621
4.9 QOS Setup 622
4.10 Switch Role 622

5 Synchronous Connection Establishment and Detachment **625**
5.1 Synchronous Connection Setup 625

6 Sniff, Hold and Park **631**
6.1 Sniff Mode 631
6.2 Hold Mode 632
6.3 Park State 634

7 Buffer Management, Flow Control **637**

8 Loopback Mode **639**
8.1 Local Loopback Mode 639
8.2 Remote Loopback Mode 641

9 List of Figures **643**

Part G
SAMPLE DATA

Contents **647**

1 Encryption Sample Data **649**
1.1 Generating Kc' from Kc, ... 649
1.2 First Set of Sample Data 652
1.3 Second Set of Sample Data 660
1.4 Third Set of Samples 668
1.5 Fourth Set of Samples 676

2 Frequency Hopping Sample Data **685**
2.1 First set 686
2.2 Second set 692
2.3 Third set 698

3 Access Code Sample Data **705**

4 HEC and Packet Header Sample Data **709**

5 CRC Sample Data **711**

6 Complete Sample Packets **713**
6.1 Example of DH1 Packet 713
6.2 Example of DM1 Packet 714

7 Whitening Sequence Sample Data **715**

8 FEC Sample Data **719**

9 Encryption Key Sample Data **721**
9.1 Four Tests of E1 721
9.2 Four Tests of E21 726
9.3 Three Tests of E22 728
9.4 Tests of E22 With Pin Augmenting 730
9.5 Four Tests of E3 740

Bluetooth

Part H
SECURITY SPECIFICATION

Contents **747**

1 Security Overview **749**

2 Random Number Generation **751**

3 Key Management **753**
3.1 Key Types 753
3.2 Key Generation and Initialization 755
3.2.1 Generation of initialization key, ... 756
3.2.2 Authentication 756
3.2.3 Generation of a unit key 756
3.2.4 Generation of a combination key 757
3.2.5 Generating the encryption key 758
3.2.6 Point-to-multipoint configuration 759
3.2.7 Modifying the link keys 760
3.2.8 Generating a master key 760

4 Encryption **763**
4.1 Encryption Key Size Negotiation 764
4.2 Encryption of Broadcast Messages 764
4.3 Encryption Concept 765
4.4 Encryption Algorithm 766
4.4.1 The operation of the cipher 768
4.5 LFSR Initialization 769
4.6 Key Stream Sequence 772

5 Authentication **773**
5.1 Repeated Attempts 775

6 The Authentication And Key-Generating Functions **777**
6.1 The Authentication Function E1 777
6.2 The Functions Ar and A’r 779
6.2.1 The round computations 779
6.2.2 The substitution boxes “e” and “l” 779
6.2.3 Key scheduling 780
6.3 E2-Key Generation Function for Authentication 781
6.4 E3-Key Generation Function for Encryption 783

7 List of Figures **785**

8 List of Tables **787**

Core System Package [Controller volume]

Part A

RADIO SPECIFICATION

CONTENTS

1 Scope 29

2 Frequency Bands and Channel Arrangement 31

3 Transmitter Characteristics 33

3.1 Modulation Characteristics 34

3.2 Spurious Emissions 35

3.2.1 In-band spurious emission 35

3.3 Radio Frequency Tolerance 36

4 Receiver Characteristics 37

4.1 Actual Sensitivity Level 37

4.2 Interference Performance 37

4.3 Out-of-Band Blocking 38

4.4 Intermodulation Characteristics 38

4.5 Maximum Usable Level 39

4.6 Receiver Signal Strength Indicator 39

4.7 Reference Signal Definition 39

5 Appendix A 41

6 Appendix B 43

1 SCOPE

Bluetooth devices operate in the unlicensed 2.4 GHz ISM (Industrial Scientific Medical) band. A frequency hop transceiver is applied to combat interference and fading. A shaped, binary FM modulation is applied to minimize transceiver complexity. The symbol rate is 1 Ms/s. For full duplex transmission, a Time-Division Duplex (TDD) scheme is used. This specification defines the requirements for a Bluetooth radio.

Requirements are defined for two reasons:

- Provide compatibility between radios used in the system
- Define the quality of the system

The Bluetooth radio shall fulfil the stated requirements under the operating conditions specified in Appendix A and Appendix B. The radio parameters shall be measured according to the methods described in the RF Test Specification.

This specification is based on the established regulations for Europe, Japan and North America. The standard documents listed below are only for information, and are subject to change or revision at any time.

Europe:

Approval Standards: European Telecommunications Standards Institute, ETSI
Documents: EN 300 328, ETS 300-826
Approval Authority: National Type Approval Authorities

Japan:

Approval Standards: Association of Radio Industries and Businesses, ARIB
Documents: ARIB STD-T66
Approval Authority: Ministry of Post and Telecommunications, MPT.

North America:

Approval Standards: Federal Communications Commission, FCC, USA
Documents: CFR47, Part 15, Sections 15.205, 15.209, 15.247 and 15.249

Approval Standards: Industry Canada, IC, Canada
Documents: GL36

Approval Authority: FCC (USA), Industry Canada (Canada)

2 FREQUENCY BANDS AND CHANNEL ARRANGEMENT

The Bluetooth system operates in the 2.4 GHz ISM band. This frequency band is 2400 - 2483.5 MHz.

Regulatory Range	RF Channels
2.400-2.4835 GHz	f=2402+k MHz, k=0,…,78

Table 2.1: Operating frequency bands

RF channels are spaced 1 MHz and are ordered in channel number k as shown in Table 2.1. In order to comply with out-of-band regulations in each country, a guard band is used at the lower and upper band edge.

Lower Guard Band	Upper Guard Band
2 MHz	3.5 MHz

Table 2.2: Guard Bands

3 TRANSMITTER CHARACTERISTICS

The requirements stated in this section are given as power levels at the antenna connector of the Bluetooth device. If the device does not have a connector, a reference antenna with 0 dBi gain is assumed.

Due to difficulty in measurement accuracy in radiated measurements, systems with an integral antenna should provide a temporary antenna connector during type approval.

If transmitting antennas of directional gain greater than 0 dBi are used, the applicable paragraphs in EN 300 328, EN 301 489-17and FCC part 15 shall be compensated for.

The device is classified into three power classes.

Power Class	Maximum Output Power (Pmax)	Nominal Output Power	Minimum Output Power[1]	Power Control
1	100 mW (20 dBm)	N/A	1 mW (0 dBm)	Pmin<+4 dBm to Pmax Optional: Pmin[2] to Pmax
2	2.5 mW (4 dBm)	1 mW (0 dBm)	0.25 mW (-6 dBm)	Optional: Pmin[2)] to Pmax
3	1 mW (0 dBm)	N/A	N/A	Optional: Pmin[2)] to Pmax

Table 3.1: Power classes

1. Minimum output power at maximum power setting.
2. The lower power limit Pmin<-30dBm is suggested but is not mandatory, and may be chosen according to application needs.

Power class 1 device shall implement power control. The power control is used for limiting the transmitted power over +4 dBm. Power control capability under +4 dBm is optional and could be used for optimizing the power consumption and overall interference level. The power steps shall form a monotonic sequence, with a maximum step size of 8 dB and a minimum step size of 2 dB. A class 1 device with a maximum transmit power of +20 dBm shall be able to control its transmit power down to 4 dBm or less.

Devices with power control capability optimizes the output power in a physical link with LMP commands (see Link Manager Protocol). It is done by measuring RSSI and reporting back if the transmission power shall be increased or decreased if possible.

In a connection, the output power shall not exceed the maximum output power of power class 2 for transmitting packets if the receiving device does not support the necessary messaging for sending the power control messages, see

Link Manager Protocol Section 4.1.3 on page 211. In this case, the transmitting device shall comply with the rules of a class 2 or class 3 device.

If a class 1 device is paging or inquiring very close to another device, the input power can be larger than the requirement in Section 4.5 on page 39. This can cause the receiving device to fail to respond. It may therefore be useful to page at Class 2 or 3 power in addition to paging at power class 1.

3.1 MODULATION CHARACTERISTICS

The Modulation is GFSK (Gaussian Frequency Shift Keying) with a bandwidth-bit period product BT=0.5. The Modulation index shall be between 0.28 and 0.35. A binary one shall be represented by a positive frequency deviation, and a binary zero shall be represented by a negative frequency deviation. The symbol timing shall be less than ±20 ppm.

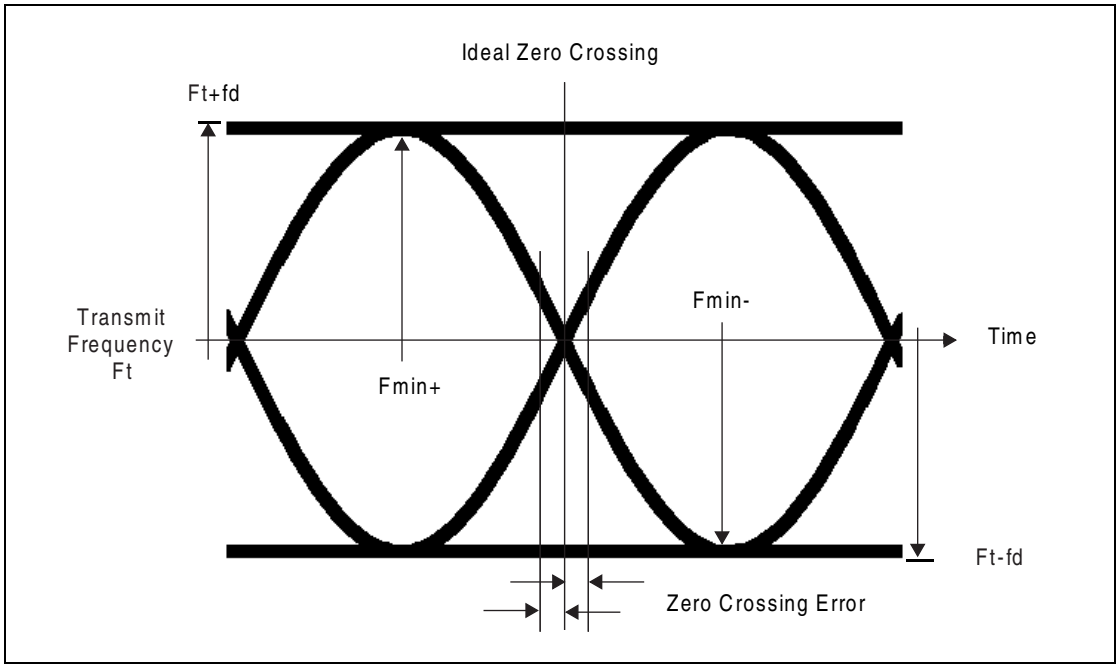

Figure 3.1: GFSK parameters definition.

For each transmission, the minimum frequency deviation, Fmin = min{|Fmin+|, Fmin-}, which corresponds to 1010 sequence shall be no smaller than ±80% of the frequency deviation (fd) with respect to the transmit frequency Ft, which corresponds to a 00001111 sequence.

In addition, the minimum frequency deviation shall never be smaller than 115 kHz. The data transmitted has a symbol rate of 1 Ms/s.

The zero crossing error is the time difference between the ideal symbol period and the measured crossing time. This shall be less than ± 1/8 of a symbol period.

3.2 SPURIOUS EMISSIONS

In-band spurious emissions shall be measured with a frequency hopping radio transmitting on one RF channel and receiving on a second RF channel; this means that the synthesizer may change RF channels between reception and transmission, but always returns to the same transmit RF channel. There will be no reference in this document to out of ISM band spurious emissions; the equipment manufacturer is responsible for compliance in the intended country of use.

3.2.1 In-band spurious emission

Within the ISM band the transmitter shall pass a spectrum mask, given in Table 3.2. The spectrum shall comply with the 20dB bandwidth definition in FCC part 15.247 and shall be measured accordingly. In addition to the FCC requirement an adjacent channel power on adjacent channels with a difference in RF channel number of two or greater is defined. This adjacent channel power is defined as the sum of the measured power in a 1 MHz RF channel. The transmitted power shall be measured in a 100 kHz bandwidth using maximum hold. The device shall transmit on RF channel M and the adjacent channel power shall be measured on RF channel number N. The transmitter shall transmit a pseudo random data pattern in the payload throughout the test.

Frequency offset	Transmit Power
± 500 kHz	-20 dBc
2MHz (|M-N| = 2)	-20 dBm
3MHz or greater (|M-N| ≥ 3)	-40 dBm

Table 3.2: Transmit Spectrum mask.

Note: If the output power is less than 0dBm then, wherever appropriate, the FCC's 20 dB relative requirement overrules the absolute adjacent channel power requirement stated in the above table.

Exceptions are allowed in up to three bands of 1 MHz width centered on a frequency which is an integer multiple of 1 MHz. They shall comply with an absolute value of –20 dBm.

3.3 RADIO FREQUENCY TOLERANCE

The transmitted initial center frequency shall be within ±75 kHz from F_c. The initial frequency accuracy is defined as being the frequency accuracy before any packet information is transmitted. Note that the frequency drift requirement is not included in the ±75 kHz.

The limits on the transmitter center frequency drift within a packet are specified in Table 3.3. The different packets are defined in the Baseband Specification.

Duration of Packet	Frequency Drift
Max length one slot packet	±25 kHz
Max length three slot packet	±40 kHz
Max length five slot packet	±40 kHz
Maximum drift rate[1]	400 Hz/µs

Table 3.3: Maximum allowable frequency drifts in a packet.

1. The maximum drift rate is allowed anywhere in a packet.

4 RECEIVER CHARACTERISTICS

The receiver characteristics shall be measured using loopback as defined in "Test Methodology" on page 233[vol. 3].

The reference sensitivity level referred to in this chapter is -70 dBm.

4.1 ACTUAL SENSITIVITY LEVEL

The actual sensitivity level is defined as the input level for which a raw bit error rate (BER) of 0.1% is met. The receiver sensitivity shall be below or equal to –70 dBm with any Bluetooth transmitter compliant to the transmitter specification specified in Section 3 on page 33.

4.2 INTERFERENCE PERFORMANCE

The interference performance on Co-channel and adjacent 1 MHz and 2 MHz shall be measured with the wanted signal 10 dB over the reference sensitivity level. For interference performance on all other RF channels the wanted signal shall be 3 dB over the reference sensitivity level. If the frequency of an interfering signal is outside of the band 2400-2483,5 MHz, the out-of-band blocking specification (see Section 4.3 on page 38) shall apply. The interfering signal shall be Bluetooth-modulated (see section 4.7 on page 39). The BER shall be ≤0.1% for all the signal-to-interference ratios listed in Table 4.1:

Frequency of Interference	Ratio
Co-Channel interference, $C/I_{co\text{-}channel}$	11 dB
Adjacent (1 MHz) interference, C/I_{1MHz}	0 dB
Adjacent (2 MHz) interference, C/I_{2MHz}	-30 dB
Adjacent (≥3 MHz) interference, $C/I_{\geq 3MHz}$	-40 dB
Image frequency Interference[1] [2], C/I_{Image}	-9 dB
Adjacent (1 MHz) interference to in-band image frequency, $C/I_{Image\pm 1MHz}$	-20 dB

Table 4.1: Interference performance

1. In-band image frequency
2. If the image frequency ≠ n*1 MHz, then the image reference frequency is defined as the closest n*1 MHz frequency.

   If two adjacent channel specifications from Table 4.1 are applicable to the same channel, the more relaxed specification applies.

These specifications are only to be tested at nominal temperature conditions with a device receiving on one RF channel and transmitting on a second RF channel; this means that the synthesizer may change RF channels between reception and transmission, but always returns to the same receive RF channel.

RF channels where the requirements are not met are called spurious response RF channels. Five spurious response RF channels are allowed at RF channels with a distance of ≥2 MHz from the wanted signal. On these spurious response RF channels a relaxed interference requirement C/I = -17 dB shall be met.

4.3 OUT-OF-BAND BLOCKING

The out-of-band suppression (or rejection) shall be measured with the wanted signal 3 dB over the reference sensitivity level. The interfering signal shall be a continuous wave signal. The BER shall be ≤ 0.1%. The out-of-band blocking shall fulfil the following requirements:

Interfering Signal Frequency	Interfering Signal Power Level
30 MHz - 2000 MHz	-10 dBm
2000 - 2399 MHz	-27 dBm
2484 – 3000 MHz	-27 dBm
3000 MHz – 12.75 GHz	-10 dBm

Table 4.2: Out-of-band suppression (or rejection) requirements.

24 exceptions are permitted which are dependent upon the given RF channel and are centered at a frequency which is an integer multiple of 1 MHz. For at least 19 of these spurious response frequencies, a reduced interference level of at least -50dBm is allowed in order to achieve the required BER=0.1% performance, whereas for a maximum of 5 of the spurious frequencies the interference level may be assumed arbitrarily lower.

4.4 INTERMODULATION CHARACTERISTICS

The reference sensitivity performance, BER = 0.1%, shall be met under the following conditions:

- The wanted signal shall be at frequency f_0 with a power level 6 dB over the reference sensitivity level.
- A static sine wave signal shall be at a frequency f_1 with a power level of –39 dBm.
- A Bluetooth modulated signal (see Section 4.7 on page 39) shall be at f_2 with a power level of -39 dBm.

Frequencies f0, f1 and f2 shall be chosen such that $f_0=2f_1-f_2$ and $|f_2-f_1|=n*1$ MHz, where n can be 3, 4, or 5. The system shall fulfill at least one of the three alternatives (n=3,4, or 5).

4.5 MAXIMUM USABLE LEVEL

The maximum usable input level that the receiver operates at shall be greater than -20 dBm. The BER shall be less than or equal to 0.1% at –20 dBm input power.

4.6 RECEIVER SIGNAL STRENGTH INDICATOR

If a device supports Receive Signal Strength Indicator (RSSI) the accuracy shall be +/- 6 dBm.

4.7 REFERENCE SIGNAL DEFINITION

A Bluetooth modulated interfering signal shall be defined as:

Modulation = GFSK

Modulation index = 0.32±1%

BT= 0.5±1%

Bit Rate = 1 Mbps ±1 ppm

Modulating Data for wanted signal = PRBS9

Modulating Data for interfering signal = PRBS 15

Frequency accuracy better than ±1 ppm.

5 APPENDIX A

5.1 NOMINAL TEST CONDITIONS

5.1.1 Nominal temperature

The nominal temperature conditions for tests shall be +15 to +35 ^{o}C. When it is impractical to carry out the test under this condition a note to this effect, stating the ambient temperature, shall be recorded. The actual value during the test shall be recorded in the test report.

5.1.2 Nominal power source

5.1.2.1 Mains voltage

The nominal test voltage for equipment to be connected to the mains shall be the nominal mains voltage. The nominal voltage shall be the declared voltage or any of the declared voltages for which the equipment was designed. The frequency of the test power source corresponding to the AC mains shall be within 2% of the nominal frequency.

5.1.2.2 Lead-acid battery power sources used in vehicles

When radio equipment is intended for operation from the alternator-fed lead-acid battery power sources which are standard in vehicles, then the nominal test voltage shall be 1.1 times the nominal voltage of the battery (6V, 12V, etc.).

5.1.2.3 Other power sources

For operation from other power sources or types of battery (primary or secondary), the nominal test voltage shall be as declared by the equipment manufacturer. This shall be recorded in the test report.

5.2 EXTREME TEST CONDITIONS

5.2.1 Extreme temperatures

The extreme temperature range shall be the largest temperature range given by the combination of:

- The minimum temperature range 0 °C to +35 °C
- The product operating temperature range declared by the manufacturer.

This extreme temperature range and the declared operating temperature range shall be recorded in the test report.

5.2.2 Extreme power source voltages

Tests at extreme power source voltages specified below are not required when the equipment under test is designed for operation as part of and powered by another system or piece of equipment. Where this is the case, the limit values of the host system or host equipment shall apply. The appropriate limit values shall be declared by the manufacturer and recorded in the test report.

5.2.2.1 Mains voltage

The extreme test voltage for equipment to be connected to an AC mains source shall be the nominal mains voltage ±10%.

5.2.2.2 Lead-acid battery power source used on vehicles

When radio equipment is intended for operation from the alternator-fed lead-acid battery power sources which are standard in vehicles, then extreme test voltage shall be 1.3 and 0.9 times the nominal voltage of the battery (6V, 12V etc.)

5.2.2.3 Power sources using other types of batteries

The lower extreme test voltage for equipment with power sources using the following types of battery, shall be

a) for Leclanché, alkaline, or lithium type battery: 0.85 times the nominal voltage of the battery

b) for mercury or nickel-cadmium types of battery: 0.9 times the nominal voltage of the battery.

In both cases, the upper extreme test voltage shall be 1.15 times the nominal voltage of the battery.

5.2.2.4 Other power sources

For equipment using other power sources, or capable of being operated from a variety of power sources (primary or secondary), the extreme test voltages shall be those declared by the manufacturer. These shall be recorded in the test report.

6 APPENDIX B

The radio parameters shall be tested in the following conditions

Parameter	Temperature	Power source
Output Power	ETC	ETC
Power control	NTC	NTC
Modulation index	ETC	ETC
Initial Carrier Frequency accuracy	ETC	ETC
Carrier Frequency drift	ETC	ETC
Conducted in-band spurious emissions	ETC	ETC
Radiated in-band emissions	NTC	NTC
Sensitivity	ETC	ETC
Interference Performance	NTC	NTC
Intermodulation Characteristics	NTC	NTC
Out-of-band blocking	NTC	NTC
Maximum Usable Level	NTC	NTC
Receiver Signal Strength Indicator	NTC	NTC

ETC = Extreme Test Conditions
NTC = Nominal Test Conditions

Core System Package [Controller volume]
Part B

BASEBAND SPECIFICATION

This document describes the specification of the Bluetooth link controller which carries out the baseband protocols and other low-level link routines.

CONTENTS

1 General Description 53
1.1 Bluetooth Clock 54
1.2 Bluetooth Device Addressing 55
1.2.1 Reserved addresses 55
1.3 Access Codes 56
2 Physical Channels....57
2.1 Physical Channel Definition 58
2.2 Basic Piconet Physical Channel....58
2.2.1 Master-slave definition 58
2.2.2 Hopping characteristics 59
2.2.3 Time slots 59
2.2.4 Piconet clocks 60
2.2.5 Transmit/receive timing 60
2.2.5.1 Piconet physical channel timing 61
2.2.5.2 Piconet physical channel re-synchronization .62
2.3 Adapted Piconet Physical Channel 63
2.3.1 Hopping characteristics 63
2.4 Page Scan Physical Channel....64
2.4.1 Clock estimate for paging....64
2.4.2 Hopping characteristics 64
2.4.3 Paging procedure timing 65
2.4.4 Page response timing....66
2.5 Inquiry Scan Physical Channel 68
2.5.1 Clock for inquiry....68
2.5.2 Hopping characteristics 68
2.5.3 Inquiry procedure timing....68
2.5.4 Inquiry response timing 68
2.6 Hop Selection....70
2.6.1 General selection scheme....70
2.6.2 Selection kernel 74
2.6.2.1 First addition operation 74
2.6.2.2 XOR operation 75
2.6.2.3 Permutation operation....75
2.6.2.4 Second addition operation 76
2.6.2.5 Register bank....76
2.6.3 Adapted hop selection kernel 77
2.6.3.1 Channel re-mapping function....77

2.6.4 Control word 78
2.6.4.1 Page scan and inquiry scan hopping sequences 79
2.6.4.2 Page hopping sequence 80
2.6.4.3 Slave page response hopping sequence 80
2.6.4.4 Master page response hopping sequence 81
2.6.4.5 Inquiry hopping sequence 81
2.6.4.6 Inquiry response hopping sequence 82
2.6.4.7 Basic and adapted channel hopping sequence 82

3 Physical Links 83
3.1 Link Supervision 83

4 Logical Transports 85
4.1 General 85
4.2 Logical Transport Address (LT_ADDR) 85
4.3 Synchronous Logical Transports 86
4.4 Asynchronous Logical Transport 86
4.5 Transmit/Receive Routines 87
4.5.1 TX Routine 87
4.5.1.1 ACL traffic 88
4.5.1.2 SCO traffic 89
4.5.1.3 Mixed data/voice traffic 89
4.5.1.4 eSCO Traffic 90
4.5.1.5 Default packet types 90
4.5.2 RX routine 90
4.5.3 Flow control 91
4.5.3.1 Destination control 92
4.5.3.2 Source control 92
4.6 Active Slave Broadcast Transport 92
4.7 Parked Slave Broadcast Transport 93
4.7.1 Parked member address (PM_ADDR) 93
4.7.2 Access request address (AR_ADDR) 93

5 Logical Links 95
5.1 Link Control Logical Link (LC) 95
5.2 ACL Control Logical Link (ACL-C) 95
5.3 User Asynchronous/Isochronous Logical Link (ACL-U) 95
5.3.1 Pausing the ACL-U logical link 96
5.4 User Synchronous Data Logical Link (SCO-S) 96
5.5 User Extended Synchronous Data Logical Link (eSCO-S) 96
5.6 Logical Link Priorities 96

6 Packets 97
6.1 General Format 97
6.2 Bit Ordering 97
6.3 Access Code 98
6.3.1 Access code types 98
6.3.2 Preamble 99
6.3.3 Sync word 99
6.3.3.1 Synchronization word definition 99
6.3.3.2 Pseudo-random noise sequence generation 102
6.3.4 Trailer 102
6.4 Packet Header 103
6.4.1 LT_ADDR 103
6.4.2 TYPE 103
6.4.3 FLOW 104
6.4.4 ARQN 104
6.4.5 SEQN 104
6.4.6 HEC 104
6.5 Packet Types 105
6.5.1 Common packet types 106
6.5.1.1 ID packet 106
6.5.1.2 NULL packet 106
6.5.1.3 POLL packet 106
6.5.1.4 FHS packet 106
6.5.1.5 DM1 packet 108
6.5.2 SCO packets 109
6.5.2.1 HV1 packet 109
6.5.2.2 HV2 packet 109
6.5.2.3 HV3 packet 109
6.5.2.4 DV packet 109
6.5.3 eSCO packets 110
6.5.3.1 EV3 packet 110
6.5.3.2 EV4 packet 110
6.5.3.3 EV5 packet 110
6.5.4 ACL packets 111
6.5.4.1 DM1 packet 111
6.5.4.2 DH1 packet 111
6.5.4.3 DM3 packet 111
6.5.4.4 DH3 packet 111
6.5.4.5 DM5 packet 111
6.5.4.6 DH5 packet 112
6.5.4.7 AUX1 packet 112

6.6 Payload Format 112
6.6.1 Synchronous data field 112
6.6.2 Asynchronous data field 113
6.7 Packet Summary 116

7 Bitstream Processing 117
7.1 Error Checking 118
7.1.1 HEC generation 118
7.1.2 CRC generation 119
7.2 Data Whitening 121
7.3 Error Correction 122
7.4 FEC Code: Rate 1/3 122
7.5 FEC Code: Rate 2/3 123
7.6 ARQ Scheme 124
7.6.1 Unnumbered ARQ 124
7.6.2 Retransmit filtering 127
7.6.2.1 Initialization of SEQN at start of new connection 128
7.6.2.2 ACL and SCO retransmit filtering 128
7.6.2.3 eSCO retransmit filtering 129
7.6.2.4 FHS retransmit filtering 129
7.6.2.5 Packets without CRC retransmit filtering 129
7.6.3 Flushing payloads 130
7.6.4 Multi-slave considerations 130
7.6.5 Broadcast packets 130

8 Link Controller Operation 133
8.1 Overview of States 133
8.2 Standby State 134
8.3 Connection Establishment Substates 134
8.3.1 Page scan substate 134
8.3.2 Page substate 136
8.3.3 Page response substates 139
8.3.3.1 Slave response substate 140
8.3.3.2 Master response substate 142
8.4 Device Discovery Substates 143
8.4.1 Inquiry scan substate 144
8.4.2 Inquiry substate 145
8.4.3 Inquiry response substate 147
8.5 Connection State 148

8.6 Active Mode 149
8.6.1 Polling in the active mode 150
8.6.2 SCO 150
8.6.3 eSCO 151
8.6.4 Broadcast scheme 154
8.6.5 Role switch 155
8.6.6 Scatternet 157
8.6.6.1 Inter-piconet communications 157
8.6.7 Hop sequence switching 158
8.6.8 Channel classification and channel map selection 161
8.6.9 Power Management 162
8.6.9.1 Packet handling 162
8.6.9.2 Slot occupancy 162
8.6.9.3 Recommendations for low-power operation 162
8.7 Sniff Mode 163
8.7.1 Sniff Transition Mode 164
8.8 Hold Mode 165
8.9 Park State 165
8.9.1 Beacon train 166
8.9.2 Beacon access window 168
8.9.3 Parked slave synchronization 169
8.9.4 Parking 170
8.9.5 Master-initiated unparking 171
8.9.6 Slave-initiated unparking 171
8.9.7 Broadcast scan window 172
8.9.8 Polling in the park state 172
9 Audio 173
9.1 LOG PCM CODEC 173
9.2 CVSD CODEC 173
9.3 Error Handling 176
9.4 General Audio Requirements 176
9.4.1 Signal levels 176
9.4.2 CVSD audio quality 176
10 List of Figures 177
11 List of Tables 181

Appendix A:
General Audio Recommendations 182

Appendix B:
Timers 185

Appendix C:
Recommendations for AFH Operation in Park, Hold and Sniff 187

1 GENERAL DESCRIPTION

This part specifies the normal operation of a Bluetooth baseband.

The Bluetooth system provides a point-to-point connection or a point-to-multi-point connection, see (a) and (b) in Figure 1.1 on page 53. In a point-to-point connection the physical channel is shared between two Bluetooth devices. In a point-to-multipoint connection, the physical channel is shared among several Bluetooth devices. Two or more devices sharing the same physical channel form a *piconet*. One Bluetooth device acts as the master of the piconet, whereas the other device(s) act as slave(s). Up to seven slaves can be active in the piconet. Additionally, many more slaves can remain connected in a parked state. These parked slaves are not active on the channel, but remain synchronized to the master and can become active without using the connection establishment procedure. Both for active and parked slaves, the channel access is controlled by the master.

Piconets that have common devices are called a *scatternet,* see (c) in Figure 1.1 on page 53. Each piconet only has a single master, however, slaves can participate in different piconets on a time-division multiplex basis. In addition, a master in one piconet can be a slave in other piconets. Piconets shall not be frequency synchronized and each piconet has its own hopping sequence.

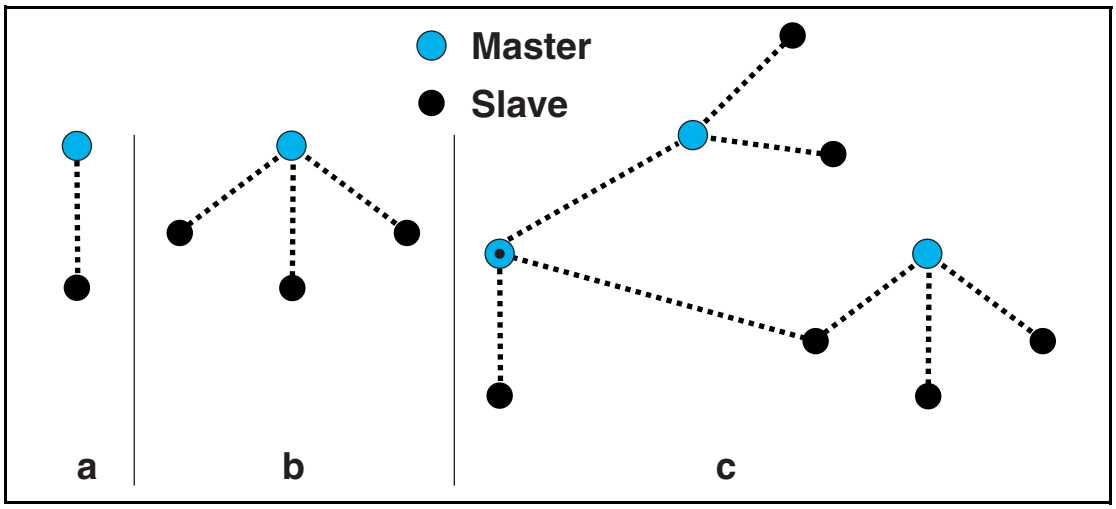

Figure 1.1: Piconets with a single slave operation (a), a multi-slave operation (b) and a scatternet operation (c).

Data is transmitted over the air in packets. The general packet format is shown in Figure 1.2. Each packet consists of 3 entities: the access code, the header, and the payload.

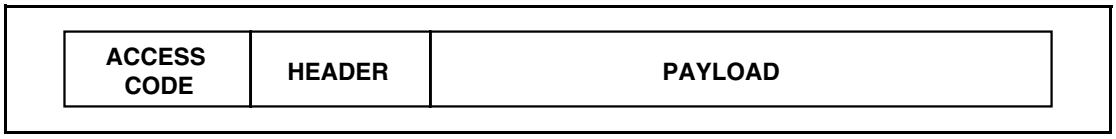

Figure 1.2: Standard packet format.

1.1 BLUETOOTH CLOCK

Every Bluetooth device shall have a native clock that shall be derived from a free running system clock. For synchronization with other devices, offsets are used that, when added to the native clock, provide temporary Bluetooth clocks that are mutually synchronized. It should be noted that the Bluetooth clock has no relation to the time of day; it may therefore be initialized to any value. The clock has a cycle of about a day. If the clock is implemented with a counter, a 28-bit counter is required that shall wrap around at 2^{28}-1. The least significant bit (LSB) shall tick in units of 312.5 µs (i.e. half a time slot), giving a clock rate of 3.2 kHz.

The clock determines critical periods and triggers the events in the device. Four periods are important in the Bluetooth system: 312.5 µs, 625 µs, 1.25 ms, and 1.28 s; these periods correspond to the timer bits CLK_0, CLK_1, CLK_2, and CLK_{12}, respectively, see Figure 1.3 on page 54.

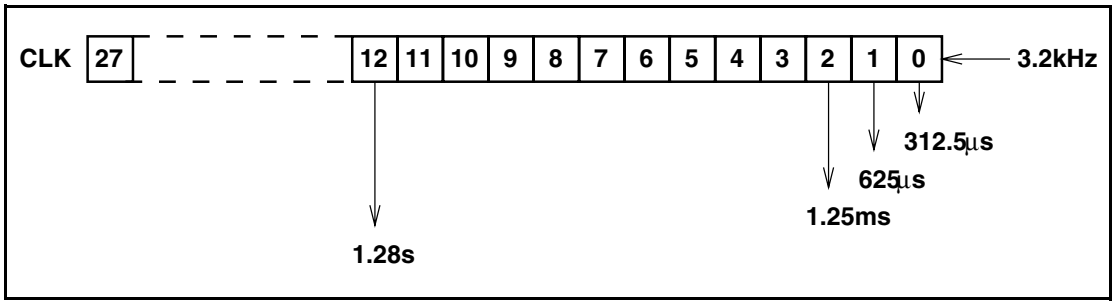

Figure 1.3: Bluetooth clock.

In the different modes and states a device can reside in, the clock has different appearances:

- CLKN native clock
- CLKE estimated clock
- CLK master clock

CLKN is the native clock and shall be the reference to all other clock appearances. In STANDBY and in Park, Hold and Sniff mode the native clock may be driven by a low power oscillator (LPO) with worst case accuracy (+/-250ppm). Otherwise, the native clock shall be driven by the reference crystal oscillator with worst case accuracy of +/-20ppm.

See Section 2.2.4 on page 60 for the definition of CLK and Section 2.4.1 on page 64 for the definition of CLKE.

The master shall never adjust its native clock during the existence of the piconet.

1.2 BLUETOOTH DEVICE ADDRESSING

Each Bluetooth device shall be allocated a unique 48-bit Bluetooth device address (BD_ADDR). This address shall be obtained from the IEEE Registration Authority. The address is divided into the following three fields:

- LAP field: lower address part consisting of 24 bits
- UAP field: upper address part consisting of 8 bits
- NAP field: non-significant address part consisting of 16 bits

The LAP and UAP form the significant part of the BD_ADDR. The bit pattern in Figure 1.4 is an example BD_ADDR.

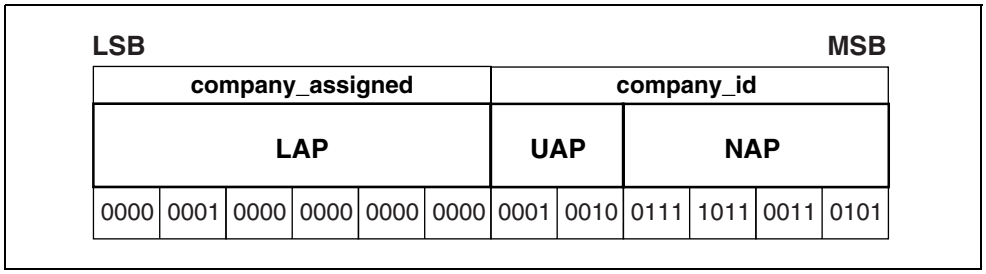

Figure 1.4: Format of BD_ADDR.

The BD_ADDR may take any values except the 64 reserved LAP values for general and dedicated inquiries (see Section 1.2.1 on page 55).

1.2.1 Reserved addresses

A block of 64 contiguous LAPs is reserved for inquiry operations; one LAP common to all devices is reserved for general inquiry, the remaining 63 LAPs are reserved for dedicated inquiry of specific classes of devices (see Assigned Numbers on the website[1]). The same LAP values are used regardless of the contents of UAP and NAP. Consequently, none of these LAPs can be part of a user BD_ADDR.

The reserved LAP addresses are 0x9E8B00-0x9E8B3F. The general inquiry LAP is 0x9E8B33. All addresses have the LSB at the rightmost position, hexadecimal notation. The default check initialization (DCI) is used as the UAP whenever one of the reserved LAP addresses is used. The DCI is defined to be 0x00 (hexadecimal).

1. https://www.bluetooth.org/foundry/assignnumb/document/assigned_numbers

1.3 ACCESS CODES

In the Bluetooth system all transmissions over the physical channel begin with an access code. Three different access codes are defined, see also Section 6.3.1 on page 98:

- device access code (DAC)
- channel access code (CAC)
- inquiry access code (IAC)

All access codes are derived from the LAP of a device address or an inquiry address. The device access code is used during **page**, **page scan** and **page response** substates and shall be derived from the paged device's BD_ADDR. The channel access code is used in the **CONNECTION** state and forms the beginning of all packets exchanged on the piconet physical channel. The channel access code shall be derived from the LAP of the master's BD_ADDR. Finally, the inquiry access code shall be used in the **inquiry** substate. There is one general IAC (GIAC) for general inquiry operations and there are 63 dedicated IACs (DIACs) for dedicated inquiry operations.

The access code also indicates to the receiver the arrival of a packet. It is used for timing synchronization and offset compensation. The receiver correlates against the entire synchronization word in the access code, providing very robust signalling.

2 PHYSICAL CHANNELS

The lowest architectural layer in the Bluetooth system is the physical channel. A number of types of physical channel are defined. All Bluetooth physical channels are characterized by the combination of a pseudo-random frequency hopping sequence, the specific slot timing of the transmissions, the access code and packet header encoding. These aspects, together with the range of the transmitters, define the signature of the physical channel. For the basic and adapted piconet physical channels frequency hopping is used to change frequency periodically to reduce the effects of interference and to satisfy local regulatory requirements.

Two devices that wish to communicate use a shared physical channel for this communication. To achieve this, their transceivers must be tuned to the same RF frequency at the same time, and they must be within a nominal range of each other.

Given that the number of RF carriers is limited and that many Bluetooth devices may be operating independently within the same spatial and temporal area there is a strong likelihood of two independent Bluetooth devices having their transceivers tuned to the same RF carrier, resulting in a physical channel collision. To mitigate the unwanted effects of this collision each transmission on a physical channel starts with an access code that is used as a correlation code by devices tuned to the physical channel. This channel access code is a property of the physical channel. The access code is always present at the start of every transmitted packet.

Four Bluetooth physical channels are defined. Each is optimized and used for a different purpose. Two of these physical channels (the basic piconet channel and adapted piconet channel) are used for communication between connected devices and are associated with a specific piconet. The remaining physical channels are used for discovering (the inquiry scan channel) and connecting (the page scan channel) Bluetooth devices.

A Bluetooth device can only use one of these physical channels at any given time. In order to support multiple concurrent operations the device uses time-division multiplexing between the channels. In this way a Bluetooth device can appear to operate simultaneously in several piconets, as well as being discoverable and connectable.

Whenever a Bluetooth device is synchronized to the timing, frequency and access code of a physical channel it is said to be 'connected' to this channel (whether or not it is actively involved in communications over the channel.) At a minimum, a device need only be capable of connection to one physical channel at a time, however, advanced devices may be capable of connecting simultaneously to more than one physical channel, but the specification does not assume that this is possible.

2.1 PHYSICAL CHANNEL DEFINITION

Physical channels are defined by a pseudo-random RF channel hopping sequence, the packet (slot) timing and an access code. The hopping sequence is determined by the UAP and LAP of a Bluetooth device address and the selected hopping sequence. The phase in the hopping sequence is determined by the Bluetooth clock. All physical channels are subdivided into time slots whose length is different depending on the physical channel. Within the physical channel, each reception or transmission event is associated with a time slot or time slots. For each reception or transmission event an RF channel is selected by the hop selection kernel (see Section 2.6 on page 70).The maximum hop rate is 1600 hops/s in the **CONNECTION** state and the maximum is 3200 hops/s in the **inquiry** and **page** substates.

The following physical channels are defined:

- basic piconet physical channel
- adapted piconet physical channel
- page scan physical channel
- inquiry scan physical channel

2.2 BASIC PICONET PHYSICAL CHANNEL

During the **CONNECTION** state the basic piconet physical channel is used by default. The adapted piconet physical channel may also be used. The adapted piconet physical channel is identical to the basic piconet physical channel except for the differences listed in Section 2.3 on page 63.

2.2.1 Master-slave definition

The basic piconet physical channel is defined by the master of the piconet. The master controls the traffic on the piconet physical channel by a polling scheme. (see Section 8.5 on page 148)

By definition, the device that initiates a connection by paging is the master. Once a piconet has been established, master-slave roles may be exchanged. This is described in Section 8.6.5 on page 155.

2.2.2 Hopping characteristics

The basic piconet physical channel is characterized by a pseudo-random hopping through all 79 RF channels. The frequency hopping in the piconet physical channel is determined by the Bluetooth clock and BD_ADDR of the master. When the piconet is established, the master clock is communicated to the slaves. Each slave shall add an offset to its native clock to synchronize with the master clock. Since the clocks are independent, the offsets must be updated regularly. All devices participating in the piconet are time-synchronized and hop-synchronized to the channel.

The basic piconet physical channel uses the basic channel hopping sequence and is described in Section 2.6 on page 70.

2.2.3 Time slots

The basic piconet physical channel is divided into time slots, each 625 µs in length. The time slots are numbered according to the most significant 27 bits of the Bluetooth clock CLK_{28-1} of the piconet master. The slot numbering ranges from 0 to 2^{27}-1 and is cyclic with a cycle length of 2^{27}. The time slot number is denoted as k.

A TDD scheme is used where master and slave alternatively transmit, see Figure 2.1 on page 59. The packet start shall be aligned with the slot start. Packets may extend over up to five time slots.

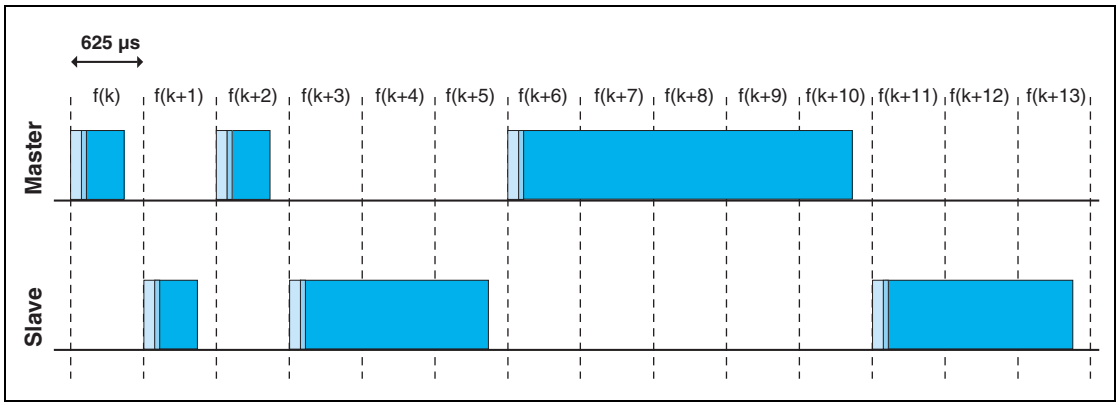

Figure 2.1: Multi-slot packets

The term *slot pairs* is used to indicate two adjacent time slots starting with a master-to-slave transmission slot.

2.2.4 Piconet clocks

CLK is the master clock of the piconet. It shall be used for all timing and scheduling activities in the piconet. All devices shall use the CLK to schedule their transmission and reception. The CLK shall be derived from the native clock CLKN (see Section 1.1 on page 54) by adding an offset, see Figure 2.2 on page 60. The offset shall be zero for the master since CLK is identical to its own native clock CLKN. Each slave shall add an appropriate offset to its CLKN such that the CLK corresponds to the CLKN of the master. Although all CLKNs in the devices run at the same nominal rate, mutual drift causes inaccuracies in CLK. Therefore, the offsets in the slaves must be regularly updated such that CLK is approximately CLKN of the master.

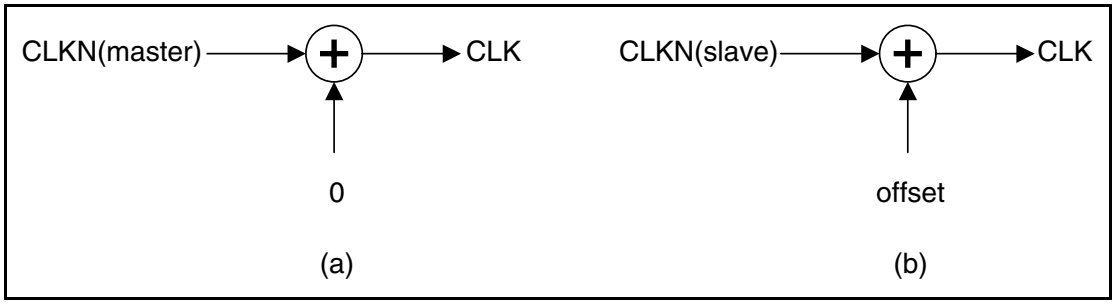

Figure 2.2: Derivation of CLK in master (a) and in slave (b).

2.2.5 Transmit/receive timing

The master transmission shall always start at even numbered time slots (CLK_1=0) and the slave transmission shall always start at odd numbered time slots (CLK_1=1). Due to packet types that cover more than a single slot, master transmission may continue in odd numbered slots and slave transmission may continue in even numbered slots, see Figure 2.1 on page 59.

All timing diagrams shown in this chapter are based on the signals as present at the antenna. The term “exact” when used to describe timing refers to an ideal transmission or reception and neglects timing jitter and clock frequency imperfections.

The average timing of packet transmission shall not drift faster than 20 ppm relative to the ideal slot timing of 625 µs. The instantaneous timing shall not deviate more than 1 µs from the average timing. Thus, the absolute packet transmission timing t_k of slot boundary k shall fulfill the equation:

$$t_k = \left(\sum_{i=1}^{k} (1 + d_i) T_N \right) + j_k + \text{offset}, \qquad \text{(EQ 1)}$$

where T_N is the nominal slot length (625 µs), j_k denotes jitter ($|j_k| \leq 1$ µs) at the start of slot k, and, d_k, denotes the drift ($|d_k| \leq 20$ ppm) within slot k. The jitter and drift may vary arbitrarily within the given limits for every slot, while *offset* is an arbitrary but fixed constant. For hold, park and sniff the drift and jitter parameters specified in Link Manager Protocol [Part C] Section 4.3.1 on page 237 apply.

2.2.5.1 Piconet physical channel timing

In the figures, only single-slot packets are shown as an example.

The master TX/RX timing is shown in Figure 2.3 on page 61. In Figure 2.3 and Figure 2.4 the channel hopping frequencies are indicated by *f(k)* where k is the time slot number. After transmission, a return packet is expected N × 625 µs after the start of the TX packet where N is an odd, integer larger than 0. N depends on the type of the transmitted packet.

To allow for some time slipping, an uncertainty window is defined around the exact receive timing. During normal operation, the window length shall be 20 µs, which allows the RX packet to arrive up to 10 µs too early or 10 µs too late. It is recommended that slaves implement variable sized windows or time tracking to accomodate a master's absence of more than 250ms.

During the beginning of the RX cycle, the access correlator shall search for the correct channel access code over the uncertainty window. If an event trigger does not occur the receiver may go to sleep until the next RX event. If in the course of the search, it becomes apparent that the correlation output will never exceed the final threshold, the receiver may go to sleep earlier. If a trigger event occurs, the receiver shall remain open to receive the rest of the packet unless the packet is for another device, a non-recoverable header error is detected, or a non-recoverable payload error is detected.

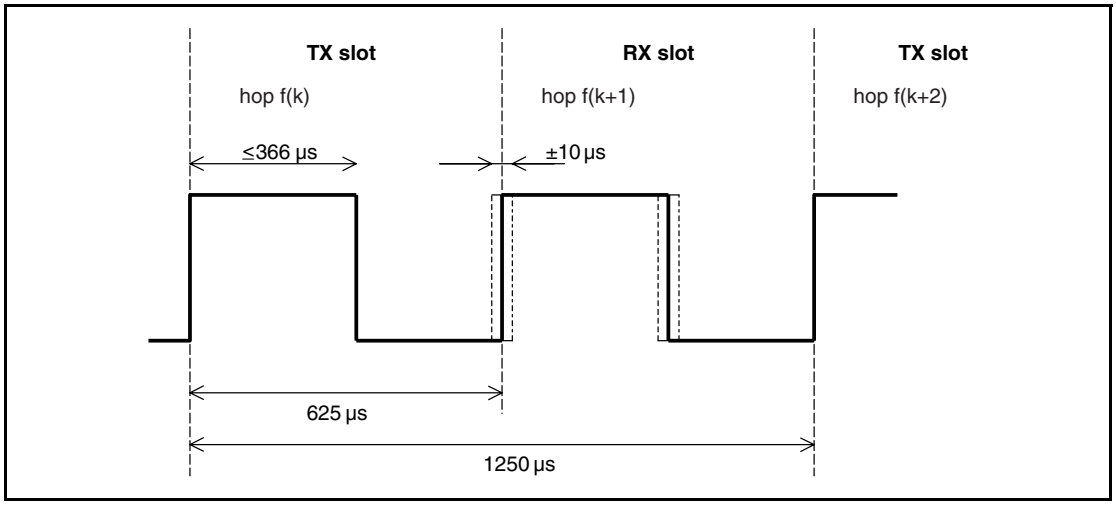

Figure 2.3: RX/TX cycle of master transceiver in normal mode for single-slot packets.

Each master transmission shall be derived from bit 2 of the Master's native Bluetooth clock, thus the current transmission will be scheduled Mx1250µs after the start of the previous master TX burst where M depends on the transmitted and received packet type and is an even, integer larger than 0. The master TX timing shall be derived from the master's native Bluetooth clock, and thus it will not be affected by time drifts in the slave(s).

Slaves maintain an estimate of the master's native clock by adding a timing offset to the slave's native clock (see Section 2.2.4 on page 60). This offset shall be updated each time a packet is received from the master. By comparing the exact RX timing of the received packet with the estimated RX timing, slaves shall correct the offset for any timing misalignments. Since only the channel access code is required to synchronize the slave, slave RX timing can be corrected with any packet sent in the master-to-slave transmission slot.

The slave's TX/RX timing is shown in Figure 2.4 on page 62. The slave's transmission shall be scheduled N × 625µs after the start of the slave's RX packet where N is an odd, positive integer larger than 0. If the slave's RX timing drifts, so will its TX timing. During periods when a slave is in the active mode (see Section 8.6 on page 149) and is not able to receive any valid channel access codes from the master, the slave may increase its receive uncertainty window and/or use predicted timing drift to increase the probability of receiving the master's bursts when reception resumes.

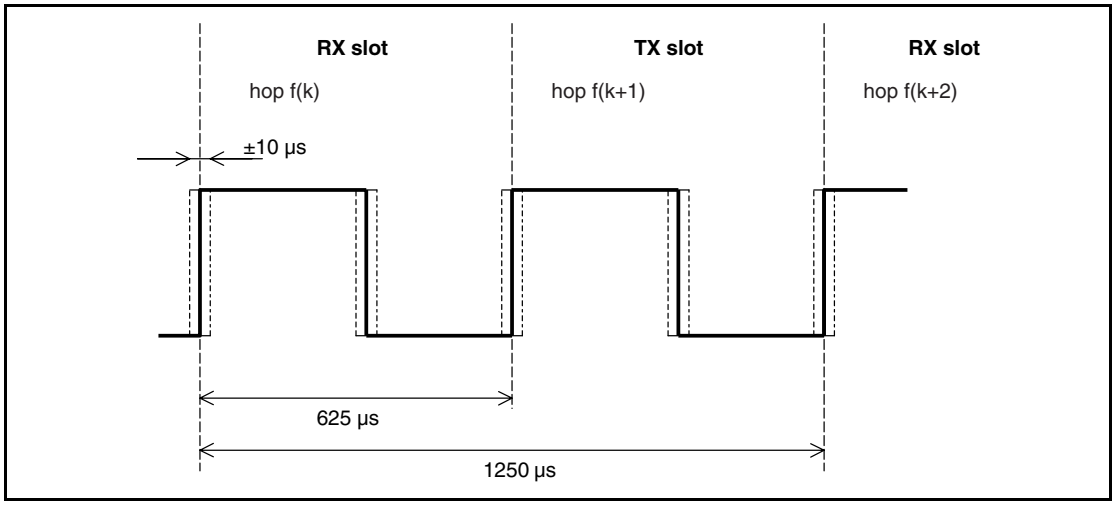

Figure 2.4: RX/TX cycle of slave transceiver in normal mode for single-slot packets.

2.2.5.2 Piconet physical channel re-synchronization

In the piconet physical channel, a slave may loose synchronization if it does not receive a packet from the master at least every 250ms (or less if the low power clock is used). This may occur in sniff, hold, park, in a scatternet or due to interference. When re-synchronizing to the piconet physical channel a slave device shall listen for the master before it may send information. In this case, the length of the search window in the slave device may be increased from 20 µs to a larger value X µs as illustrated in Figure 2.5 on page 63. Note that only RX hop frequencies are used. The hop frequency used in the master-to-slave (RX) slot shall also be used in the uncertainty window, even when it is extended into the preceding time interval normally used for the slave-to-master (TX) slot.

If the length of search window, X, exceeds 1250 µs, consecutive windows shall avoid overlapping search windows. Consecutive windows should instead be centered at *f(k), f(k+4), ... f(k+4i)* (where 'i' is an integer), which gives a maximum value X=2500 µs, or even at *f(k), f(k+6), ...f(k+6i)* which gives a maximum value X=3750 µs. The RX hop frequencies used shall correspond to the master-to-slave transmission slots.

It is recommended that single slot packets are transmitted by the master during slave re-synchronization.

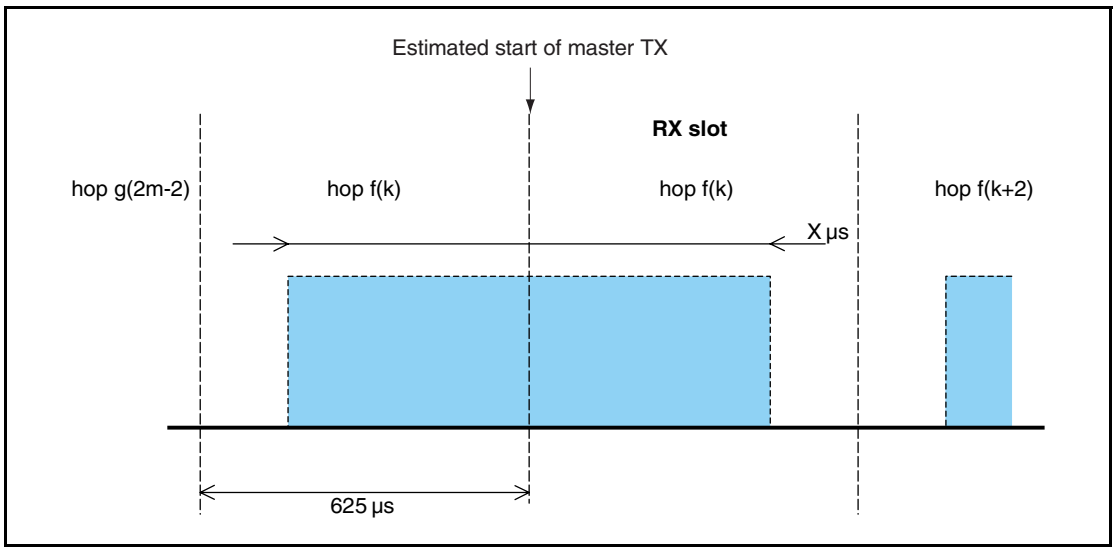

Figure 2.5: RX timing of slave returning from hold mode.

2.3 ADAPTED PICONET PHYSICAL CHANNEL

2.3.1 Hopping characteristics

The adapted piconet physical channel shall use at least N_{min} RF channels (where N_{min} is 20).

The adapted piconet physical channel uses the adapted channel hopping sequence described in Section 2.6 on page 70.

Adapted piconet physical channels can be used for connected devices that have adaptive frequency hopping (AFH) enabled. There are two distinctions between basic and adapted piconet physical channels. The first is that the same channel mechanism that makes the slave frequency the same as the preceding master transmission. The second aspect is that the adapted piconet physical channel may be based on less than the full 79 frequencies of the basic piconet physical channel.

2.4 PAGE SCAN PHYSICAL CHANNEL

Although master and slave roles are not defined prior to a connection, the term *master* is used for the paging device (that becomes a master in the **CONNECTION** state) and *slave* is used for the page scanning device (that becomes a slave in the **CONNECTION** state).

2.4.1 Clock estimate for paging

A paging device uses an estimate of the native clock of the page scanning device, CLKE; i.e. an offset shall be added to the CLKN of the pager to approximate the CLKN of the recipient, see Figure 2.6 on page 64. CLKE shall be derived from the reference CLKN by adding an offset. By using the CLKN of the recipient, the pager might be able to speed up the connection establishment.

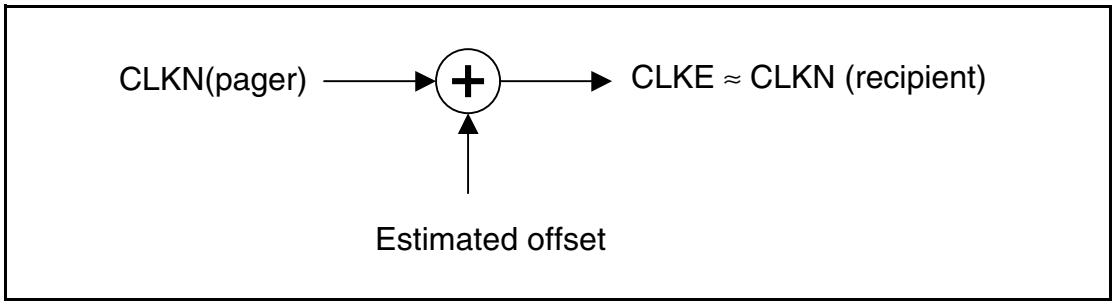

Figure 2.6: Derivation of CLKE.

2.4.2 Hopping characteristics

The page scan physical channel follows a slower hopping pattern than the basic piconet physical channel and is a short pseudo-random hopping sequence through the RF channels. The timing of the page scan channel shall be determined by the native Bluetooth clock of the scanning device. The frequency hopping sequence is determined by the Bluetooth address of the scanning device.

The page scan physical channel uses the page, master page response, slave page response, and page scan hopping sequences specified in Section 2.6 on page 70.

2.4.3 Paging procedure timing

During the paging procedure, the master shall transmit paging messages (see Table 8.3 on page 139) corresponding to the slave to be connected. Since the paging message is a very short packet, the hop rate is 3200 hops/s. In a single TX slot interval, the paging device shall transmit on two different hop frequencies. In Figure 2.7 through Figure 2.11, *f(k)* is used for the frequencies of the page hopping sequence and *f'(k)* denotes the corresponding page response sequence frequencies. The first transmission starts where $CLK_0 = 0$ and the second transmission starts where $CLK_0 = 1$.

In a single RX slot interval, the paging device shall listen for the slave page response message on two different hop frequencies. Similar to transmission, the nominal reception starts where $CLK_0 = 0$ and the second reception nominally starts where $CLK_0 = 1$; see Figure 2.7 on page 65. During the TX slot, the paging device shall send the paging message at the TX hop frequencies *f(k)* and *f*(*k*+1). In the RX slot, it shall listen for a response on the corresponding RX hop frequencies *f'(k)* and *f'*(*k*+1). The listening periods shall be exactly timed 625 µs after the corresponding paging packets, and shall include a ±10 µs uncertainty window.

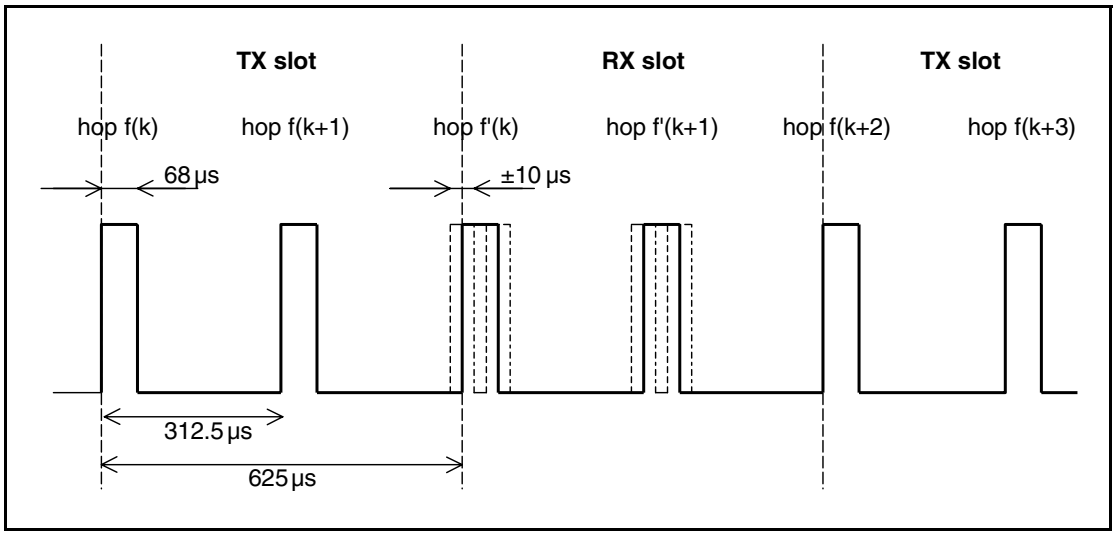

Figure 2.7: RX/TX cycle of transceiver in PAGE mode.

2.4.4 Page response timing

At connection setup a master page response packet is transmitted from the master to the slave (see Table 8.3 on page 139). This packet establishes the timing and frequency synchronization. After the slave device has received the page message, it shall return a response message that consists of the slave page response packet and shall follow 625 µs after the receipt of the page message. The master shall send the master page response packet in the TX slot following the RX slot in which it received the slave response, according to the RX/TX timing of the master. The time difference between the slave page response and master page response message will depend on the timing of the page message the slave received. In Figure 2.8 on page 66, the slave receives the paging message sent **first** in the master-to-slave slot. It then responds with a first slave page response packet in the first half of the slave-to-master slot. The timing of the master page response packet is based on the timing of the page message sent first in the preceding master-to-slave slot: there is an exact 1250 µs delay between the first page message and the master page response packet. The packet is sent at the hop frequency *f(k*+1*)* which is the hop frequency following the hop frequency *f(k)* the page message was received in.

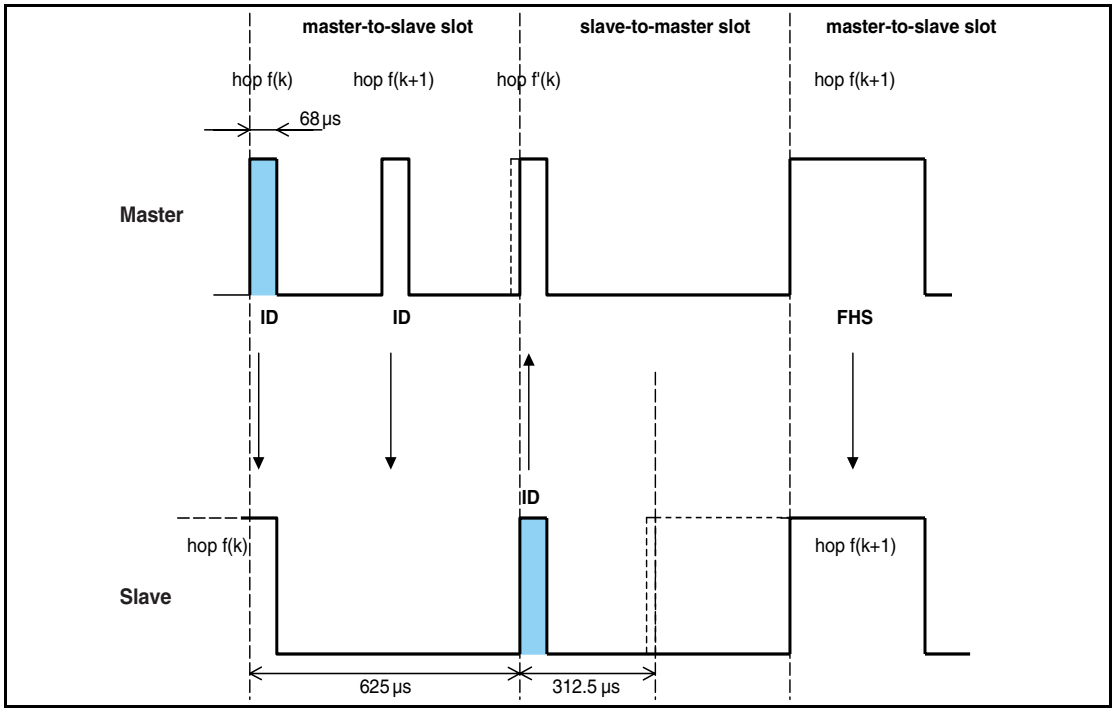

Figure 2.8: Timing of page response packets on successful page in first half slot

In Figure 2.9 on page 67, the slave receives the paging message sent **second** in the master-to-slave slot. It then responds with a slave page response packet in the second half of the slave-to-master slot exactly 625 µs after the receipt of the page message. The timing of the master page response packet is still based on the timing of the page message sent **first** in the preceding master-to-slave slot: there is an exact 1250 µs delay between the **first** page message and the master page response packet. The packet is sent at the hop frequency *f*(*k+2)* which is the hop frequency following the hop frequency *f*(*k+1)* the page message was received in.

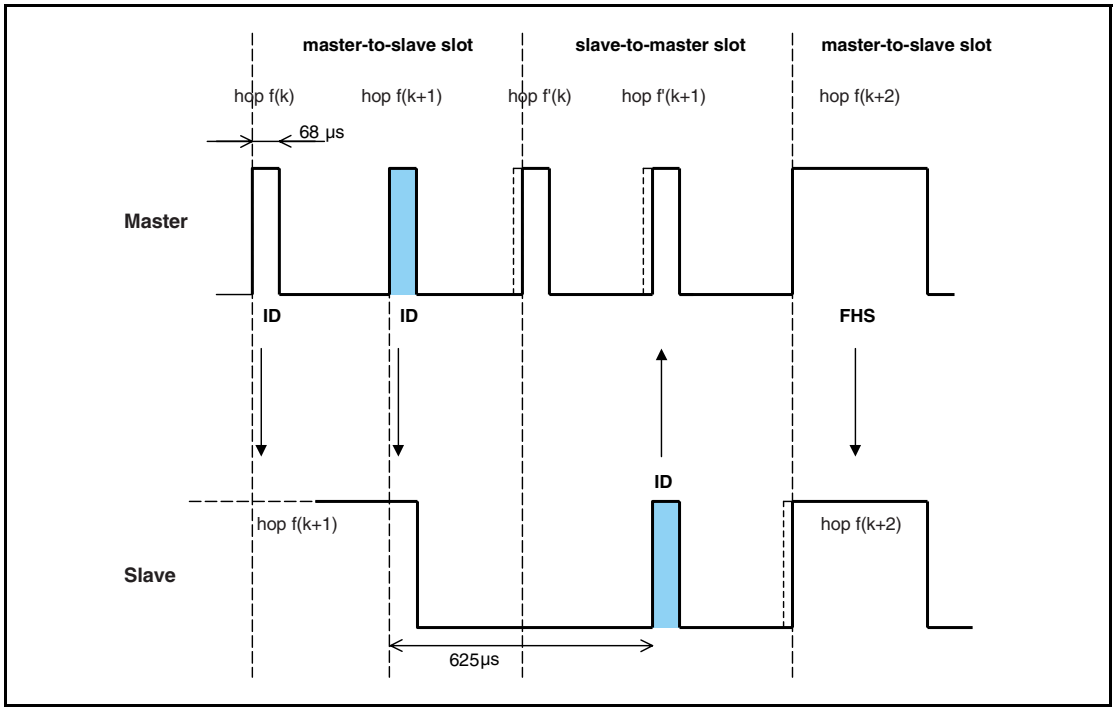

Figure 2.9: Timing of page response packets on successful page in second half slot

The slave shall adjust its RX/TX timing according to the reception of the master page response packet (and not according to the reception of the page message). That is, the second slave page response message that acknowledges the reception of the master page response packet shall be transmitted 625 µs after the start of the master page response packet.

2.5 INQUIRY SCAN PHYSICAL CHANNEL

Although master and slave roles are not defined prior to a connection, the term *master* is used for the inquiring device and *slave* is used for the inquiry scanning device.

2.5.1 Clock for inquiry

The clock used for inquiry and inquiry scan shall be the device's native clock.

2.5.2 Hopping characteristics

The inquiry scan channel follows a slower hopping pattern than the piconet physical channel and is a short pseudo-random hopping sequence through the RF channels. The timing of the inquiry scan channel is determined by the native Bluetooth clock of the scanning device while the frequency hopping sequence is determined by the general inquiry access code.

The inquiry scan physical channel uses the inquiry, inquiry response, and inquiry scan hopping sequences described in Section 2.6 on page 70.

2.5.3 Inquiry procedure timing

During the inquiry procedure, the master shall transmit inquiry messages with the general or dedicated inquiry access code. The timing for inquiry is the same as for paging (see Section 2.4.3 on page 65).

2.5.4 Inquiry response timing

An inquiry response packet is transmitted from the slave to the master after the slave has received an inquiry message (see Table 8.5 on page 147). This packet contains information necessary for the inquiring master to page the slave (see definition of the FHS packet in Section 6.5.1.4 on page 106) and follows 625µs after the receipt of the inquiry message. In figures Figure 2.10 and Figure 2.11, *f(k)* is used for the frequencies of the inquiry hopping sequence and f'(k) denotes the corresponding inquiry response sequence frequency. The packet is received by the master at the hop frequency *f'(k)* when the inquiry message received by the slave was first in the master-to-slave slot.

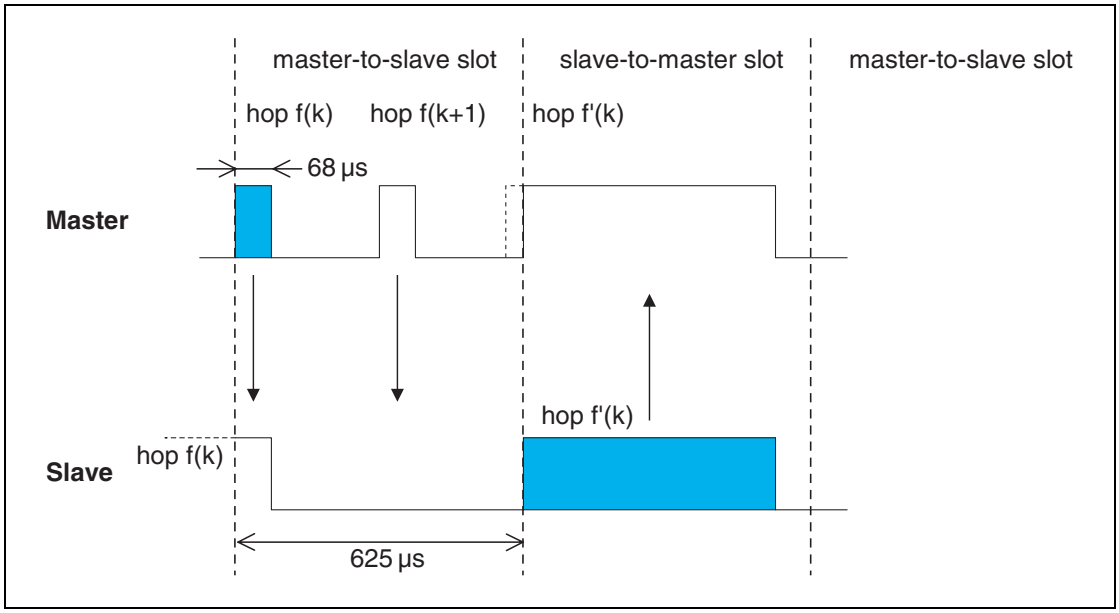

Figure 2.10: Timing of inquiry response packet on successful inquiry in first half slot

When the inquiry message received by the slave was the second in the master-to-slave slot the packet is received by the master at the hop frequency *f'(k+1)*.

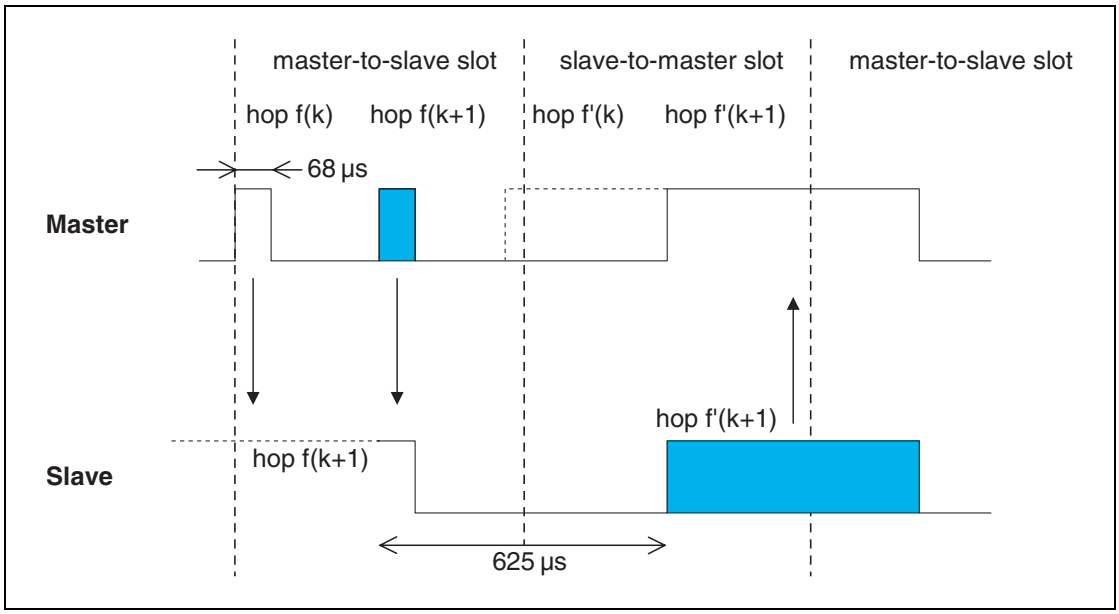

Figure 2.11: Timing of inquiry response packet on successful inquiry in second half slot

2.6 HOP SELECTION

Bluetooth devices shall use the hopping kernel as defined in the following sections.

In total, six types of hopping sequence are defined – five for the basic hop system and one for an adapted set of hop locations used by adaptive frequency hopping (AFH). These sequences are:

- A **page hopping sequence** with 32 wake-up frequencies distributed equally over the 79 MHz, with a period length of 32;
- A **page response hopping sequence** covering 32 response frequencies that are in a one-to-one correspondence to the current page hopping sequence. The master and slave use different rules to obtain the same sequence;
- An **inquiry hopping sequence** with 32 wake-up frequencies distributed equally over the 79 MHz, with a period length of 32;
- An **inquiry response hopping sequence** covering 32 response frequencies that are in a one-to-one correspondence to the current inquiry hopping sequence.
- A **basic channel hopping sequence** which has a very long period length, which does not show repetitive patterns over a short time interval, and which distributes the hop frequencies equally over the 79 MHz during a short time interval.
- An **adapted channel hopping sequence** derived from the basic channel hopping sequence which uses the same channel mechanism and may use fewer than 79 frequencies. The adapted channel hopping sequence is only used in place of the basic channel hopping sequence. All other hopping sequences are not affected by hop sequence adaptation.

2.6.1 General selection scheme

The selection scheme consists of two parts:

- selecting a sequence;
- mapping this sequence onto the hop frequencies;

The general block diagram of the hop selection scheme is shown in Figure 2.12 on page 71. The mapping from the input to a particular RF channel index is performed in the selection box.

The inputs to the selection box are the selected clock, frozen clock, N, k_{offset}, address, sequence selection and AFH_channel_map. The source of the clock input depends on the hopping sequence selected. Additionally, each hopping sequence uses different bits of the clock (see Table 2.2 on page 79). N and k_{offset} are defined in Section 2.6.4 on page 78.

The *sequence selection* input can be set to the following values:

- page scan
- inquiry scan
- page
- inquiry
- master page response
- slave page response
- inquiry response
- basic channel
- adapted channel

The address input consists of 28 bits including the entire LAP and the 4 LSBs of the UAP. This is designated as the UAP/LAP. When the basic or adapted channel hopping sequence is selected, the Bluetooth device address of the master (BD_ADDR) shall be used. When the page, master page response, slave page response, or page scan hopping sequences are selected the BD_ADDR given by the Host of the paged device shall be used (see HCI Create Connection Command [Part E] Section 7.1.5 on page 380). When the inquiry, inquiry response, or inquiry scan hopping sequences are selected, the UAP/LAP corresponding to the GIAC shall be used even if it concerns a DIAC. Whenever one of the reserved BD_ADDRs (see Section 1.2.1 on page 55) is used for generating a frequency hop sequence, the UAP shall be replaced by the default check initialization (DCI, see Section 7.1 on page 118). The hopping sequence is selected by the sequence selection input to the selection box.

When the adapted channel hopping sequence is selected, the *AFH_channel_map* is an additional input to the selection box. The *AFH_channel_map* indicates which channels shall be *used* and which shall be *unused*. These terms are defined in Section 2.6.3 on page 77.

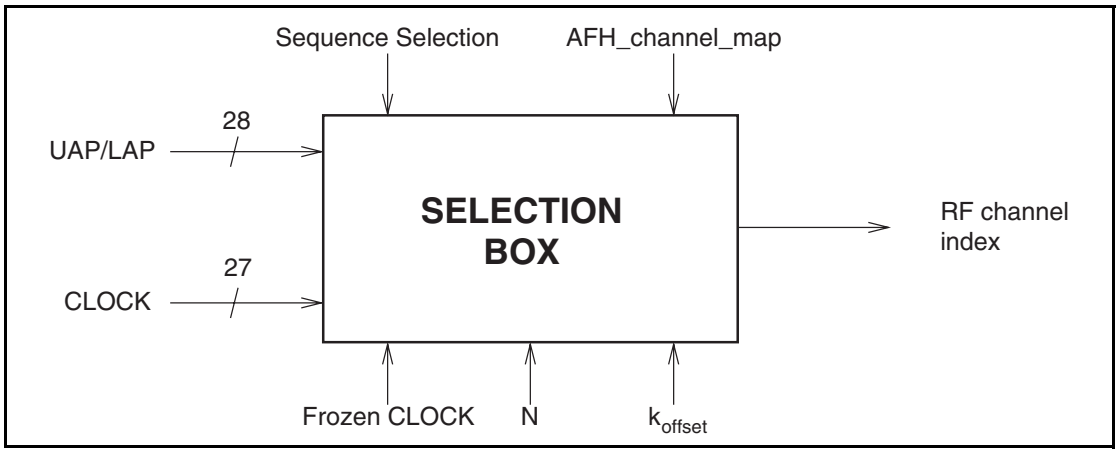

Figure 2.12: General block diagram of hop selection scheme.

The output, *RF channel index*, constitutes a pseudo-random sequence. The RF channel index is mapped to RF channel frequencies using the equation in Table 2.1 on page 31 in the Radio Specification.

The selection scheme chooses a segment of 32 hop frequencies spanning about 64 MHz and visits these hops in a pseudo-random order. Next, a different 32-hop segment is chosen, etc. In the page, master page response, slave page response, page scan, inquiry, inquiry response and inquiry scan hopping sequences, the same 32-hop segment is used all the time (the segment is selected by the address; different devices will have different paging segments). When the basic channel hopping sequence is selected, the output constitutes a pseudo-random sequence that slides through the 79 hops. The principle is depicted in Figure 2.13 on page 72.

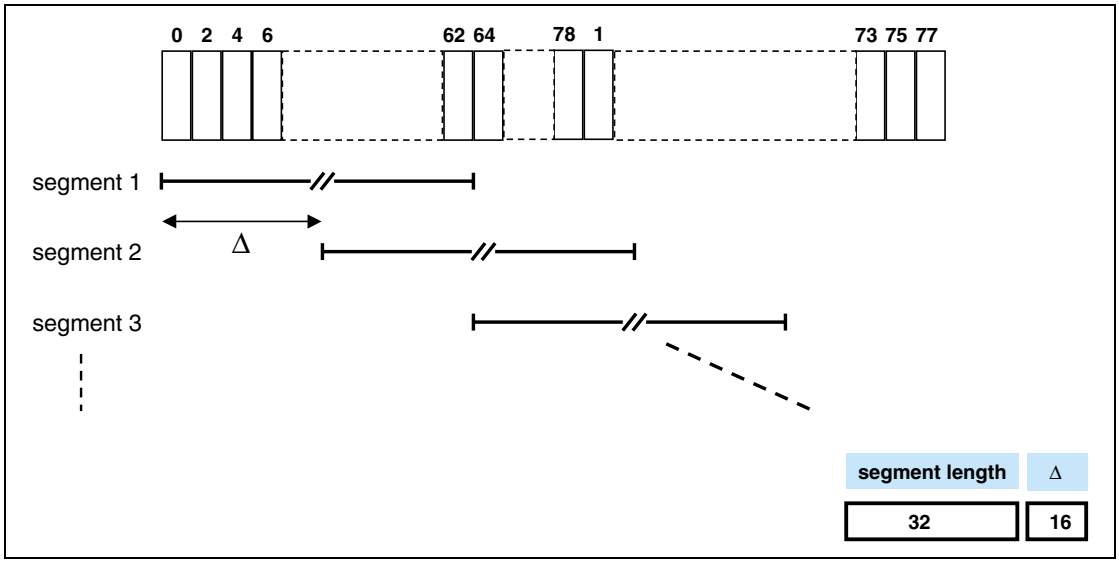

Figure 2.13: Hop selection scheme in CONNECTION state.

The RF frequency shall remain fixed for the duration of the packet. The RF frequency for the packet shall be derived from the Bluetooth clock value in the first slot of the packet. The RF frequency in the first slot after a multi-slot packet shall use the frequency as determined by the Bluetooth clock value for that slot. Figure 2.14 on page 73 illustrates the hop definition on single- and multi-slot packets.

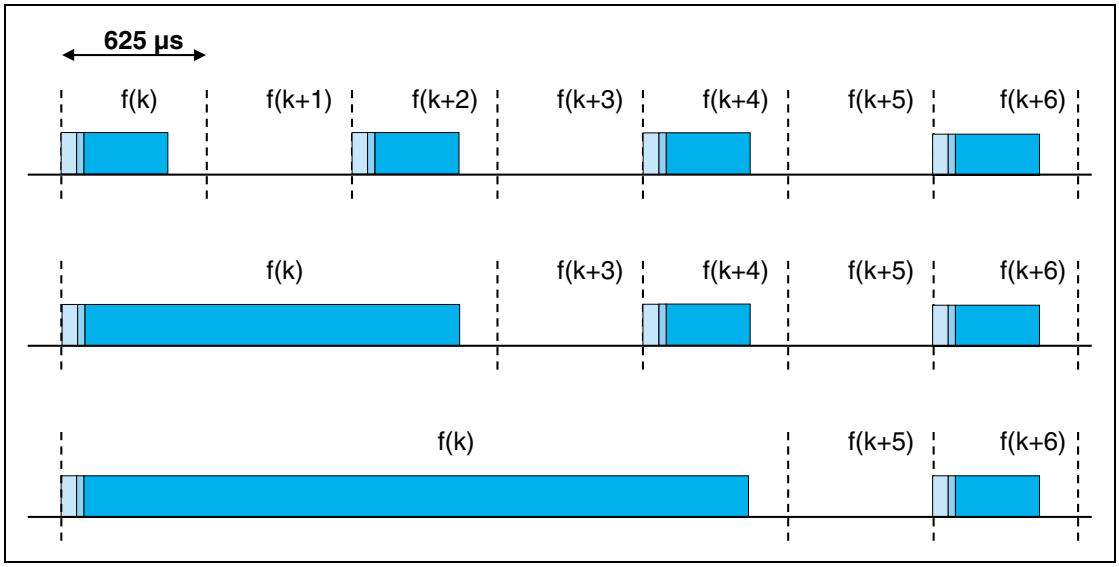

Figure 2.14: Single- and multi-slot packets.

When the adapted channel hopping sequence is used, the pseudo-random sequence contains only frequencies that are in the RF channel set defined by the *AFH_channel_map* input. The adapted sequence has similar statistical properties to the non-adapted hop sequence. In addition, the slave responds with its packet on the same RF channel that was used by the master to address that slave (or would have been in the case of a synchronous reserved slot without a validly received master-to-slave transmission). This is called the *same channel mechanism* of AFH. Thus, the RF channel used for the master to slave packet is also used for the immediately following slave to master packet. An example of the same channel mechanism is illustrated in Figure 2.15 on page 73. The same channel mechanism shall be used whenever the adapted channel hopping sequence is selected.

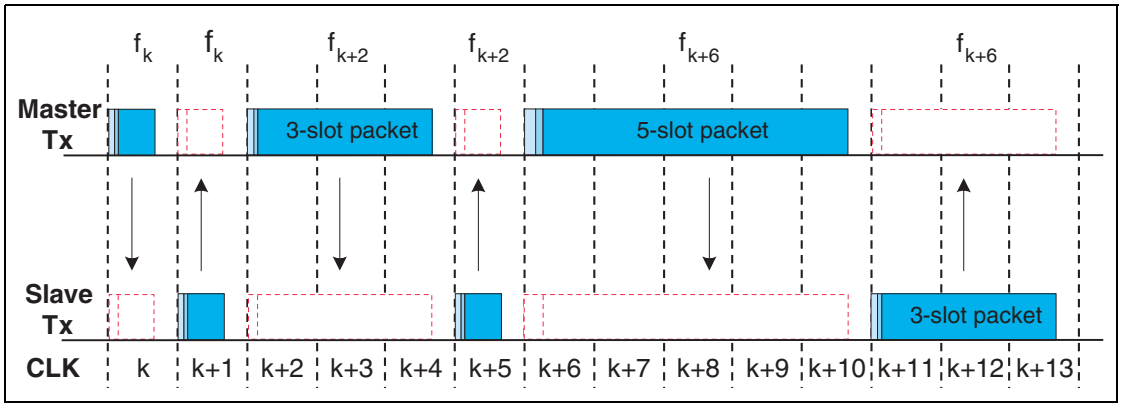

Figure 2.15: Example of the same channel mechanism.

2.6.2 Selection kernel

The basic hop selection kernel shall be as shown in Figure 2.16 on page 74 and is used for the page, page response, inquiry, inquiry response and basic channel hopping selection kernels. In these substates the AFH_channel_map input is unused. The adapted channel hopping selection kernel is described in Section 2.6.3 on page 77. The X input determines the phase in the 32-hop segment, whereas Y1 and Y2 selects between master-to-slave and slave-to-master. The inputs A to D determine the ordering within the segment, the inputs E and F determine the mapping onto the hop frequencies. The kernel addresses a register containing the RF channel indices. This list is ordered so that first all even RF channel indices are listed and then all odd hop frequencies. In this way, a 32-hop segment spans about 64 MHz.

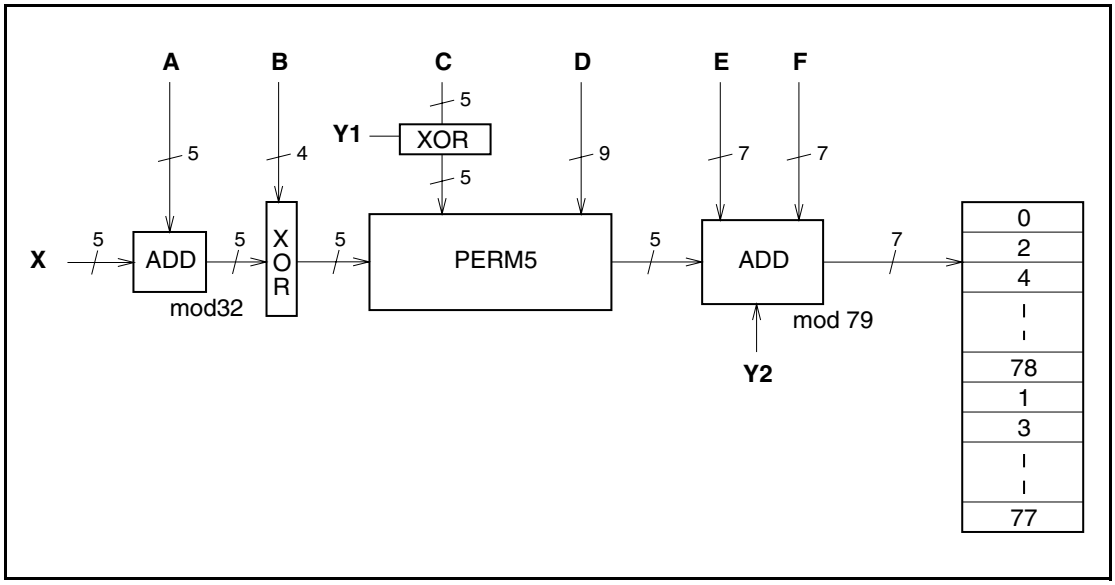

Figure 2.16: Block diagram of the basic hop selection kernel for the hop system.

The selection procedure consists of an addition, an XOR operation, a permutation operation, an addition, and finally a register selection. In the remainder of this chapter, the notation A_i is used for bit i of the BD_ADDR.

2.6.2.1 First addition operation

The first addition operation only adds a constant to the phase and applies a modulo 32 operation. For the page hopping sequence, the first addition is redundant since it only changes the phase within the segment. However, when different segments are concatenated (as in the basic channel hopping sequence), the first addition operation will have an impact on the resulting sequence.

2.6.2.2 XOR operation

Let Z' denote the output of the first addition. In the XOR operation, the four LSBs of Z' are modulo-2 added to the address bits $A_{22\text{-}19}$. The operation is illustrated in Figure 2.17 on page 75.

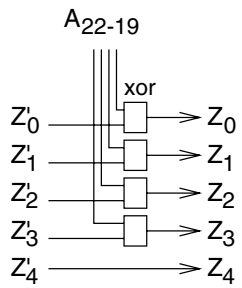

Figure 2.17: XOR operation for the hop system.

2.6.2.3 Permutation operation

The permutation operation involves the switching from 5 inputs to 5 outputs for the hop system, controlled by the control word. The permutation or switching box shall be as shown in Figure 2.18 on page 76. It consists of 7 stages of butterfly operations. The control of the butterflies by the control signals P is shown in Table 2.1. $P_{0\text{-}8}$ corresponds to $D_{0\text{-}8}$, and, P_{i+9} corresponds to $C_i \oplus Y1$ for $i = 0 \ldots 4$ in Figure 2.16 .

Control signal	Butterfly		Control signal	Butterfly
P_0	$\{Z_0,Z_1\}$		P_8	{Z1,Z4}
P_1	$\{Z_2,Z_3\}$		P_9	$\{Z_0,Z_3\}$
P_2	$\{Z_1,Z_2\}$		P_{10}	$\{Z_2,Z_4\}$
P_3	$\{Z_3,Z_4\}$		P_{11}	$\{Z_1,Z_3\}$
P_4	$\{Z_0,Z_4\}$		P_{12}	$\{Z_0,Z_3\}$
P_5	$\{Z_1,Z_3\}$		P_{13}	$\{Z_1,Z_2\}$
P_6	$\{Z_0,Z_2\}$			
P_7	$\{Z_3,Z_4\}$			

Table 2.1: Control of the butterflies for the hop system

The Z input is the output of the XOR operation as described in the previous section. The butterfly operation can be implemented with multiplexers as depicted in Figure 2.19 on page 76.

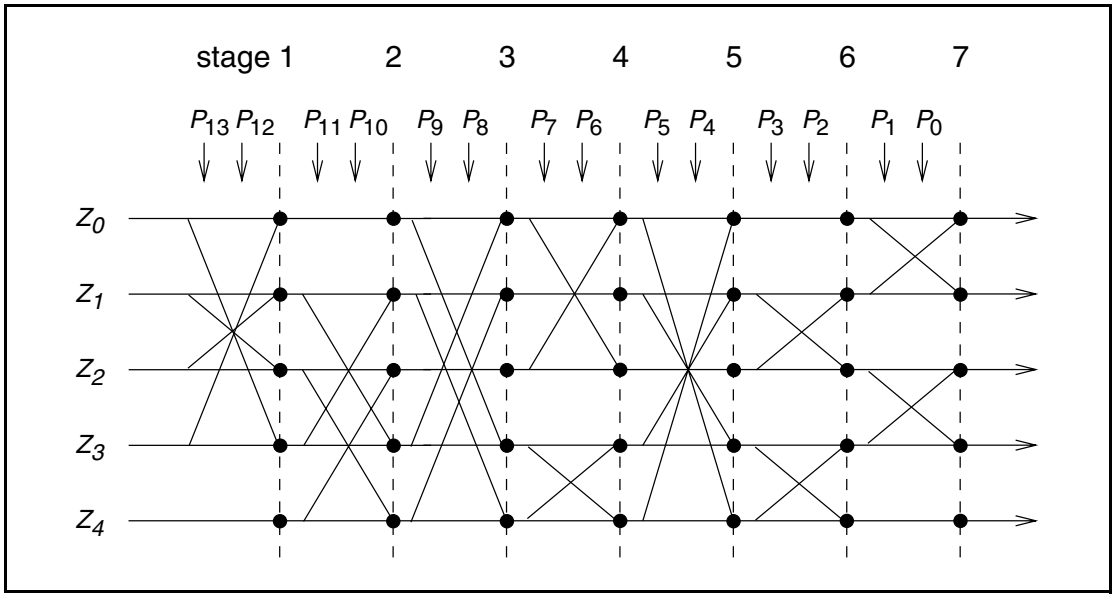

Figure 2.18: Permutation operation for the hop system.

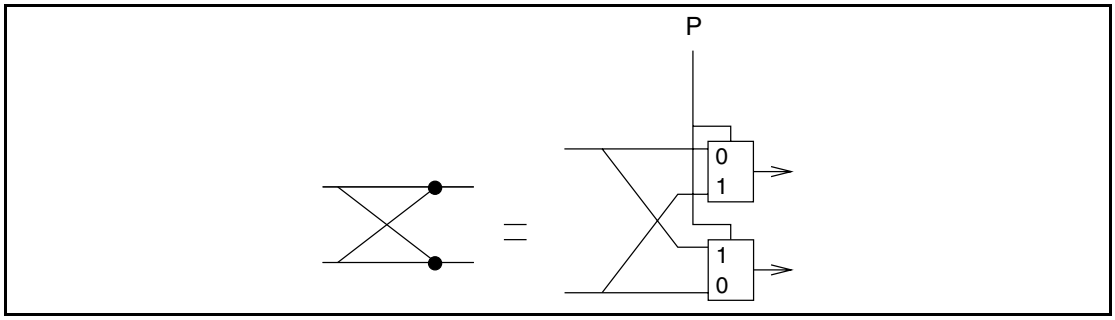

Figure 2.19: Butterfly implementation.

2.6.2.4 Second addition operation

The addition operation only adds a constant to the output of the permutation operation. The addition is applied modulo 79.

2.6.2.5 Register bank

The output of the adder addresses a bank of 79 registers. The registers are loaded with the synthesizer code words corresponding to the hop frequencies 0 to 78. Note that the upper half of the bank contains the even hop frequencies, whereas the lower half of the bank contains the odd hop frequencies.

2.6.3 Adapted hop selection kernel

The adapted hop selection kernel is based on the basic hop selection kernel defined in the preceding sections.

The inputs to the adapted hop selection kernel are the same as for the basic hop system kernel except that the input AFH_channel_map (defined in Link Manager Protocol [Part C] Section 5.2 on page 277) is used. The *AFH_channel_map* indicates which RF channels shall be *used* and which shall be *unused*. When hop sequence adaptation is enabled, the number of *used* RF channels may be reduced from 79 to some smaller value N. All devices shall be capable of operating on an adapted hop sequence (AHS) with $N_{min} \leq N \leq 79$, with any combination of *used* RF channels within the *AFH_channel_map* that meets this constraint. N_{min} is defined in Section 2.3.1 on page 63.

Adaptation of the hopping sequence is achieved through two additions to the basic channel hopping sequence according to Figure 2.16 on page 74:

- *Unused* RF channels are re-mapped uniformly onto *used* RF channels. That is, if the hop selection kernel of the basic system generates an *unused* RF channel, an alternative RF channel out of the set of *used* RF channels is selected pseudo-randomly.
- The *used* RF channel generated for the master-to-slave packet is also used for the immediately following slave-to-master packet (see Section 2.6.1 on page 70).

2.6.3.1 Channel re-mapping function

When the adapted hop selection kernel is selected, the basic hop selection kernel according to Figure 2.16 on page 74 is initially used to determine an RF channel. If this RF channel is *unused* according to the *AFH_channel_map*, the *unused* RF channel is re-mapped by the re-mapping function to one of the *used* RF channels. If the RF channel determined by the basic hop selection kernel is already in the set of *used* RF channels, no adjustment is made. The hop sequence of the (non-adapted) basic hop equals the sequence of the adapted selection kernel on all locations where *used* RF channels are generated by the basic hop. This property facilitates non-AFH slaves remaining synchronized while other slaves in the piconet are using the adapted hopping sequence.

A block diagram of the re-mapping mechanism is shown in Figure 2.20 on page 78. The re-mapping function is a post-processing step to the selection kernel from Figure 2.16 on page 74, denoted as ‘Hop selection of the basic hop’. The output f_k of the basic hop selection kernel is an RF channel number that ranges between 0 and 78. This RF channel will either be in the set of *used* RF channels or in the set of *unused* RF channels.

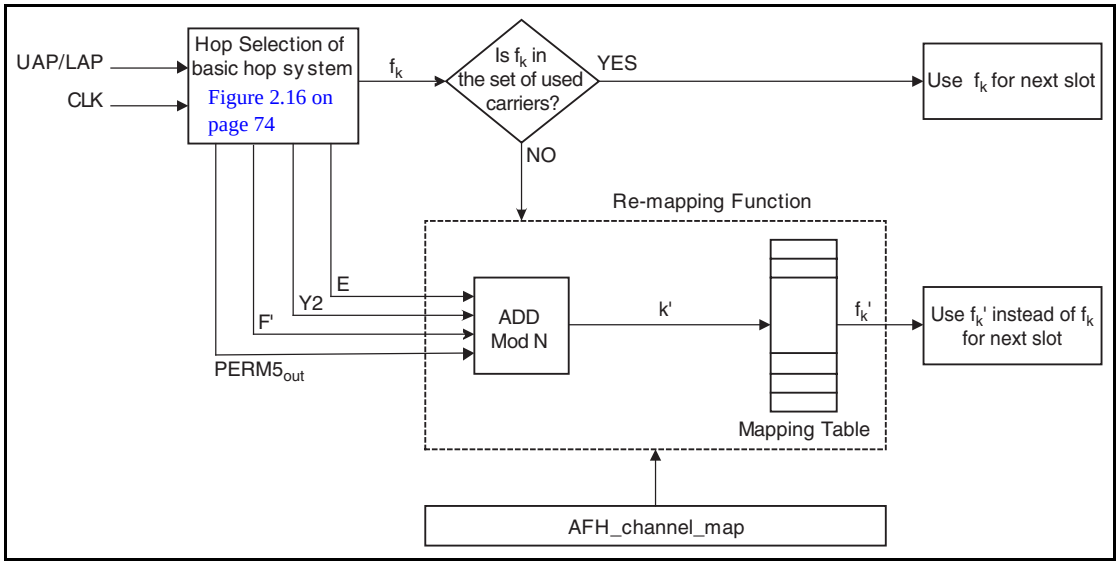

Figure 2.20: Block diagram of adaptive hop selection mechanism

When an unused RF channel is generated by the basic hop selection mechanism, it is re-mapped to the set of *used* RF channels as follows. A new index $k' \in \{0, 1, ..., N\text{-}1\}$ is calculated using some of the parameters from the basic hop selection kernel:

$$k' = (PERM5_{out} + E + F' + Y2) \bmod N$$

where *F'* is defined in Table 2.2 on page 79. The index *k'* is then used to select the re-mapped channel from a mapping table that contains all of the even *used* RF channels in ascending order followed by all the odd *used* RF channels in ascending order (i.e., the mapping table of Figure 2.16 on page 74 with all the *unused* RF channels removed).

2.6.4 Control word

In the following section X_{j-i}, $i<j$, will denote bits i, i+1,...,j of the bit vector X. By convention, X_0 is the least significant bit of the vector X.

The control word of the kernel is controlled by the overall control signals X, Y1, Y2, A to F, and F' as illustrated in Figure 2.16 on page 74 and Figure 2.20 on page 78. During paging and inquiry, the inputs A to E use the address values as given in the corresponding columns of Table 2.2 on page 79. In addition, the inputs X, Y1 and Y2 are used. The F and F' inputs are unused. The clock bits $CLK_{6\text{-}2}$ (i.e., input X) specifies the phase within the length 32 sequence. CLK_1 (i.e., inputs Y1 and Y2) is used to select between TX and RX. The address inputs determine the sequence order within segments. The final mapping onto the hop frequencies is determined by the register contents.

During the **CONNECTION** state (see Section 8.5 on page 148), the inputs A, C and D shall be derived from the address bits being bit-wise XORed with the

clock bits as shown in the “Connection state” column of Table 2.2 on page 79 (the two most significant bits, MSBs, are XORed together, the two second MSBs are XORed together, etc.).

	Page scan / Interlaced Page Scan / Inquiry scan / Interlaced Inquiry Scan	**Page/Inquiry**	**Master/Slave page response and Inquiry response**	**Connection state**
X	CLKN_{16-12} / $(\mathrm{CLKN}_{16-12}+16)mod32$ / Xir_{4-0} / $Xir_{4-0}+16)mod32$	Xp_{4-0}/Xi_{4-0}	$Xprm_{4-0}$ / $Xprs_{4-0}$ / Xir_{4-0}	CLK_{6-2}
Y1	0	$\mathrm{CLKE}_1/\mathrm{CLKN}_1$	$\mathrm{CLKE}_1/\mathrm{CLKN}_1/1$	CLK_1
Y2	0	$32\times\mathrm{CLKE}_1/$ $32\times\mathrm{CLKN}_1$	$32\times\mathrm{CLKE}_1$ / $32\times\mathrm{CLKN}_1$ / 32×1	$32\times\mathrm{CLK}_1$
A	A_{27-23}	A_{27-23}	A_{27-23}	$A_{27-23}\oplus\mathrm{CLK}_{25-21}$
B	A_{22-19}	A_{22-19}	A_{22-19}	A_{22-19}
C	$A_{8,6,4,2,0}$	$A_{8,6,4,2,0}$	$A_{8,6,4,2,0}$	$A_{8,6,4,2,0}\oplus\mathrm{CLK}_{20-16}$
D	A_{18-10}	A_{18-10}	A_{18-10}	$A_{18-10}\oplus\mathrm{CLK}_{15-7}$
E	$A_{13,11,9,7,5,3,1}$	$A_{13,11,9,7,5,3,1}$	$A_{13,11,9,7,5,3,1}$	$A_{13,11,9,7,5,3,1}$
F	0	0	0	$16\times\mathrm{CLK}_{27-7}$ mod 79
F’	n/a	n/a	n/a	$16\times\mathrm{CLK}_{27-7}$ mod N

Table 2.2: Control for hop system.

The five X input bits vary depending on the current state of the device. In the **page scan** and **inquiry scan** substates, the native clock (CLKN) shall be used. In **CONNECTION** state the master clock (CLK) shall be used as input. The situation is somewhat more complicated for the other states.

2.6.4.1 Page scan and inquiry scan hopping sequences

When the sequence selection input is set to page scan, the Bluetooth device address of the scanning device shall be used as address input. When the sequence selection input is set to inquiry scan, the GIAC LAP and the four LSBs of the DCI (as A_{27-24}), shall be used as address input for the hopping sequence. For the transmitted access code and in the receiver correlator, the appropriate GIAC or DIAC shall be used. The application decides which inquiry access code to use depending on the purpose of the inquiry.

2.6.4.2 Page hopping sequence

When the sequence selection input is set to page, the paging device shall start using the **A**-train, i.e., $\{f(k-8), \ldots, f(k), \ldots, f(k+7)\}$, where $f(k)$ is the source's estimate of the current receiver frequency in the paged device. The index k is a function of all the inputs in Figure 2.16. There are 32 possible paging frequencies within each 1.28 second interval. Half of these frequencies belong to the **A**-train, the rest (i.e., $\{f(k+8), \ldots, f(k+15), f(k-16), \ldots, f(k-9)\}$) belong to the **B**-train. In order to achieve the -8 offset of the **A**-train, a constant of 24 shall be added to the clock bits (which is equivalent to -8 due to the modulo 32 operation). The **B**-train is obtained by setting the offset to 8. A cyclic shift of the order within the trains is also necessary in order to avoid a possible repetitive mismatch between the paging and scanning devices. Thus,

$$Xp = [\mathrm{CLKE}_{16-12} + k_{offset} + (\mathrm{CLKE}_{4-2,0} - \mathrm{CLKE}_{16-12}) \bmod 16] \bmod 32, \qquad \text{(EQ 2)}$$

where

$$k_{offset} = \begin{cases} 24 & \text{A-train,} \\ 8 & \text{B-train.} \end{cases} \qquad \text{(EQ 3)}$$

Alternatively, each switch between the **A**- and **B**-trains may be accomplished by adding 16 to the current value of k_{offset} (originally initialized with 24).

2.6.4.3 Slave page response hopping sequence

When the sequence selection input is set to *slave page response,* in order to eliminate the possibility of losing the link due to discrepancies of the native clock CLKN and the master's clock estimate CLKE, the four bits CLKN_{16-12} shall be frozen at their current value. The value shall be frozen at the content it has in the slot where the recipient's access code is detected. The native clock shall *not* be stopped; it is merely the values of the bits used for creating the X-input that are kept fixed for a while. A frozen value is denoted by an asterisk (*) in the discussion below.

For each response slot the paged device shall use an X-input value one larger (modulo 32) than in the preceding response slot. However, the first response shall be made with the X-input kept at the same value as it was when the access code was recognized. Let N be a counter starting at zero. Then, the X-input in the $(N+1)$-th response slot (the first response slot being the one immediately following the page slot now responding to) of the **slave response** substate is:

$$Xprs = [\mathrm{CLKN}^*_{16-12} + N] \bmod 32, \qquad \text{(EQ 4)}$$

The counter N shall be set to zero in the slot where the slave acknowledges the page (see Figure 8.3 on page 140 and Figure 8.4 on page 140). Then, the value of N shall be increased by one each time CLKN_1 is set to zero, which corresponds to the start of a master TX slot. The X-input shall be constructed this way until the first **FHS** packet is received *and* the immediately following response packet has been transmitted. After this the slave shall enter the **CONNECTION** state using the parameters received in the **FHS** packet.

2.6.4.4 Master page response hopping sequence

When the sequence selection input is set to *master page response*, the master shall freeze its estimated slave clock to the value that triggered a response from the paged device. It is equivalent to using the values of the clock estimate when receiving the slave response (since only CLKE_1 will differ from the corresponding page transmission). Thus, the values are frozen when the slave **ID** packet is received. In addition to the clock bits used, the current value of k_{offset} shall also be frozen. The master shall adjust its X-input in the same way the paged device does, i.e., by incrementing this value by one for each time CLKE_1 is set to zero. The first increment shall be done before sending the **FHS** packet to the paged device. Let N be a counter starting at one. The rule for forming the X-input is:

$$Xprm = [\mathrm{CLKE}^*_{16-12} + k_{offset}^* + (\mathrm{CLKE}^*_{4-2,0} - \mathrm{CLKE}^*_{16-12}) \bmod 16 + N] \bmod 32, \qquad \text{(EQ 5)}$$

The value of N shall be increased each time CLKE_1 is set to zero, which corresponds to the start of a master TX slot.

2.6.4.5 Inquiry hopping sequence

When the sequence selection input is set to *inquiry*, the X-input is similar to that used in the *page hopping sequence*. Since no particular device is addressed, the native clock CLKN of the inquirer shall be used. Moreover, which of the two train offsets to start with is of no real concern in this state. Consequently,

$$Xi = [\mathrm{CLKN}_{16-12} + k_{offset} + (\mathrm{CLKN}_{4-2,0} - \mathrm{CLKN}_{16-12}) \bmod 16] \bmod 32, \qquad \text{(EQ 6)}$$

where k_{offset} is defined by (EQ 3) on page 80. The initial choice of the offset is arbitrary.

The GIAC LAP and the four LSBs of the DCI (as A_{27-24}) shall be used as address input for the hopping sequence generator.

2.6.4.6 Inquiry response hopping sequence

The *inquiry response* hopping sequence is similar to the *slave page response* hopping sequence with respect to the X-input. The clock input shall not be frozen, thus the following equation apply:

$$Xir = [\mathrm{CLKN}_{16-12} + N] \bmod 32, \qquad \text{(EQ 7)}$$

Furthermore, the counter N is increased not on CLKN_1 basis, but rather after each **FHS** packet has been transmitted in response to the inquiry. There is no restriction on the initial value of N as it is independent of the corresponding value in the inquiring unit.

The GIAC LAP and the four LSBs of the DCI (as A_{27-24}) shall be used as address input for the hopping sequence generator. The other input bits to the generator shall be the same as for page response.

2.6.4.7 Basic and adapted channel hopping sequence

In the *basic* and *adapted channel hopping sequences*, the clock bits to use in the basic or adapted hopping sequence generation shall always be derived from the master clock, CLK. The address bits shall be derived from the Bluetooth device address of the master.

3 PHYSICAL LINKS

A physical link represents a baseband connection between devices. A physical link is always associated with exactly one physical channel. Physical links have common properties that apply to all logical transports on the physical link.

The common properties of physical links are:

- Power control (see Link Manager Protocol Section 4.1.3 on page 211)
- Link supervision (see Section 3.1 on page 83 and Link Manager Protocol Section 4.1.6 on page 218)
- Encryption (see Security [Part H] Section 4 on page 763 and Link Manager Protocol [Part C] Section 4.2.5 on page 232)
- Channel quality-driven data rate change (see Link Manager Protocol Section 4.1.7 on page 219)
- Multi-slot packet control (see Link Manager Protocol Section 4.1.10 on page 223)

3.1 LINK SUPERVISION

A connection can break down due to various reasons such as a device moving out of range, encountering severe interference or a power failure condition. Since this may happen without any prior warning, it is important to monitor the link on both the master and the slave side to avoid possible collisions when the logical transport address (see Section 4.2 on page 85) or parked member address (see Section 4.7.1 on page 93) is reassigned to another slave.

To be able to detect link loss, both the master and the slave shall use a link supervision timer, $T_{supervision}$. Upon reception of a valid packet header with one of the slave's addresses (see Section 4.2 on page 85) on the physical link, the timer shall be reset. If at any time in **CONNECTION** state, the timer reaches the *supervisionTO* value, the connection shall be considered disconnected. The same link supervision timer shall be used for SCO, eSCO, and ACL logical transports.

The timeout period, *supervisionTO*, is negotiated by the Link Manager. Its value shall be chosen so that the supervision timeout will be longer than hold and sniff periods. Link supervision of a parked slave shall be done by unparking and re-parking the slave.

4 LOGICAL TRANSPORTS

4.1 GENERAL

Between master and slave(s), different types of logical transports may be established. Five logical transports have been defined:

- Synchronous Connection-Oriented (SCO) logical transport
- Extended Synchronous Connection-Oriented (eSCO) logical transport
- Asynchronous Connection-Oriented (ACL) logical transport
- Active Slave Broadcast (ASB) logical transport
- Parked Slave Broadcast (PSB) logical transport

The synchronous logical transports are point-to-point logical transports between a master and a single slave in the piconet. The synchronous logical transports typically support time-bounded information like voice or general synchronous data. The master maintains the synchronous logical transports by using reserved slots at regular intervals. In addition to the reserved slots the eSCO logical transport may have a retransmission window after the reserved slots.

The ACL logical transport is also a point-to-point logical transport between the master and a slave. In the slots not reserved for synchronous logical transport(s), the master can establish an ACL logical transport on a per-slot basis to any slave, including the slave(s) already engaged in a synchronous logical transport.

The ASB logical transport is used by a master to communicate with active slaves. The PSB logical transport is used by a master to communicate with parked slaves.

4.2 LOGICAL TRANSPORT ADDRESS (LT_ADDR)

Each slave active in a piconet is assigned a primary 3-bit logical transport address (LT_ADDR). The all-zero LT_ADDR is reserved for broadcast messages. The master does not have an LT_ADDR. A master's timing relative to the slaves distinguishes it from the slaves. A secondary LT_ADDR is assigned to the slave for each eSCO logical transport in use in the piconet. Only eSCO traffic (i.e. NULL, POLL, and one of the EV packet types as negotiated at eSCO logical transport setup) may be sent on these LT_ADDRs. ACL traffic (including LMP) shall always be sent on the primary LT_ADDR. A slave shall only accept packets with matching primary or secondary LT_ADDR and broadcast packets. The LT_ADDR is carried in the packet header (see Section 6.4 on page 103). The LT_ADDR shall only be valid for as long as a slave is in the active mode. As soon as it is disconnected or parked, the slave shall lose all of its LT_ADDRs.

The primary LT_ADDR shall be assigned by the master to the slave when the slave is activated. This is either at connection establishment, at role switch, or when the slave is unparked. At connection establishment and at role switch, the primary LT_ADDR is carried in the **FHS** payload. When unparking, the primary LT_ADDR is carried in the unpark message.

4.3 SYNCHRONOUS LOGICAL TRANSPORTS

The first type of synchronous logical transport, the SCO logical transport is a symmetric, point-to-point link between the master and a specific slave. The SCO logical transport reserves slots and can therefore be considered as a circuit-switched connection between the master and the slave. The master may support up to three SCO links to the same slave or to different slaves. A slave may support up to three SCO links from the same master, or two SCO links if the links originate from different masters. SCO packets are never retransmitted.

The second type of synchronous logical transport, the eSCO logical transport, is a point-to-point logical transport between the master and a specific slave. eSCO logical transports may be symmetric or asymmetric. Similar to SCO, eSCO reserves slots and can therefore be considered a circuit-switched connection between the master and the slave. In addition to the reserved slots, eSCO supports a retransmission window immediately following the reserved slots. Together, the reserved slots and the retransmission window form the complete eSCO window.

4.4 ASYNCHRONOUS LOGICAL TRANSPORT

In the slots not reserved for synchronous logical transports, the master may exchange packets with any slave on a per-slot basis. The ACL logical transport provides a packet-switched connection between the master and all active slaves participating in the piconet. Both asynchronous and isochronous services are supported. Between a master and a slave only a single ACL logical transport shall exist. For most ACL packets, packet retransmission is applied to assure data integrity.

ACL packets not addressed to a specific slave are considered as broadcast packets and should be read by every slave. If there is no data to be sent on the ACL logical transport and no polling is required, no transmission is required.

4.5 TRANSMIT/RECEIVE ROUTINES

This section describes the way to use the packets as defined in Section 6 on page 97 in order to support the traffic on the ACL, SCO and eSCO links. Both single-slave and multi-slave configurations are considered. In addition, the use of buffers for the TX and RX routines are described.

The TX and RX routines described in sections 4.5.1 and 4.5.2 are informative only.

4.5.1 TX Routine

The TX routine is carried out separately for each asynchronous and synchronous link. Figure 4.1 on page 87 shows the asynchronous and synchronous buffers as used in the TX routine. In this figure, only a single TX asynchronous buffer and a single TX synchronous buffer are shown. In the master, there is a separate TX asynchronous buffer for each slave. In addition there may be one or more TX synchronous buffers for each synchronous slave (different SCO or eSCO logical transports may either reuse the same TX synchronous buffer, or each have their own TX synchronous buffer). Each TX buffer consists of two FIFO registers: one **current** register which can be accessed and read by the Link Controller in order to compose the packets, and one **next** register that can be accessed by the Baseband Resource Manager to load new information. The positions of the switches S1 and S2 determine which register is current and which register is next; the switches are controlled by the Link Controller. The switches at the input and the output of the FIFO registers can never be connected to the same register simultaneously.

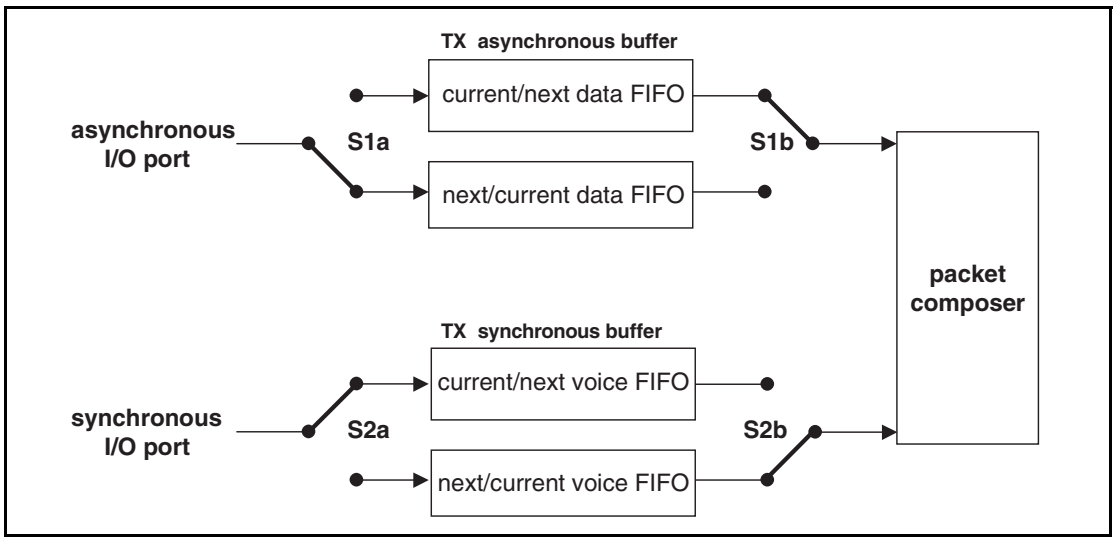

Figure 4.1: Functional diagram of TX buffering.

Of the packets common on the ACL and SCO logical transports (**NULL**, **POLL and DM1**) only the **DM1** packet carries a payload that is exchanged between the Link Controller and the Link Manager; this common packet makes use of the asynchronous buffer. All ACL packets make use of the asynchronous

buffer. All SCO and eSCO packets make use of the synchronous buffer except for the **DV** packet where the synchronous data part is handled by the synchronous buffer and the data part is handled by the asynchronous buffer. In the next sections, the operation for ACL traffic, SCO traffic, eSCO traffic, and combined data-voice traffic on the SCO logical transport are described.

4.5.1.1 ACL traffic

In the case of asynchronous data only the TX ACL buffer in Figure 4.1 on page 87 has to be considered. In this case, only packet types **DM** or **DH** are used, and these can have different lengths. The length is indicated in the payload header. The selection of **DM** or **DH** packets should depend on the quality of the link. See [Part C] Section 4.1.7 on page 219.

The default packet type in pure data traffic is **NULL** (see Section 6.5.1.2 on page 106). This means that, if there is no data to be sent (the data traffic is asynchronous, and therefore pauses occur in which no data is available) or no slaves need to be polled, **NULL** packets are sent instead – in order to send link control information to the other device (e.g. ACK/STOP information for received data). When no link control information is available (either no need to acknowledge and/or no need to stop the RX flow) no packet is sent at all.

The TX routine works as follows. The Baseband Resource Manager loads new data information in the register to which the switch S1a points. Next, it gives a command to the Link Controller, which forces the switch S1 to change (both S1a and S1b switch synchronously). When the payload needs to be sent, the packet composer reads the current register and, depending on the packet type, builds a payload which is appended to the channel access code and the header and is subsequently transmitted. In the response packet (which arrives in the following RX slot if it concerned a master transmission, or may be postponed until some later RX slot if it concerned a slave transmission), the result of the transmission is reported back. In case of an ACK, the switch S1 changes position; if a NAK (explicit or implicit) is received instead, the switch S1 will not change position. In that case, the same payload is retransmitted at the next TX occasion.

As long as the Baseband Resource Manager keeps loading the registers with new information, the Link Controller will automatically transmit the payload; in addition, retransmissions are performed automatically in case of errors. The Link Controller will send **NULL** or nothing when no new data is loaded. If no new data has been loaded in the **next** register, during the last transmission, the packet composer will be pointing to an empty register after the last transmission has been acknowledged and the **next** register becomes the **current** register. If new data is loaded in the **next** register, a **flush** command is required to switch the S1 switch to the proper register. As long as the Baseband Resource Manager keeps loading the data and type registers before each TX slot, the data is automatically processed by the Link Controller since the S1 switch is controlled by the ACK information received in response. However, if the traffic from the Baseband Resource Manager is interrupted once and a default packet is sent instead, a **flush** command is necessary to continue the flow in the Link Controller.

The **flush** command can also be used in case of time-bounded (isochronous) data. In case of a bad link, many retransmissions are necessary. In certain applications, the data is time-bounded: if a payload is retransmitted all the time because of link errors, it may become outdated, and the system might decide to continue with more recent data instead and skip the payload that does not come through. This is accomplished by the **flush** command as well. With the **flush**, the switch S1 is forced to change and the Link Controller is forced to consider the next data payload and overrules the ACK control. Any ACL type of packet can be used to send data or link control information to any other ACL slave.

4.5.1.2 SCO traffic

On the SCO logical transport only **HV** and **DV** packet types are used, See Section 6.5.2 on page 109. The synchronous port may continuously load the **next** register in the synchronous buffer. The S2 switches are changed according to the T_{sco} interval. This T_{sco} interval is negotiated between the master and the slave at the time the SCO logical transport is established.

For each new SCO slot, the packet composer reads the **current** register after which the S2 switch is changed. If the SCO slot has to be used to send control information with high priority concerning a control packet between the master and the SCO slave, or a control packet between the master and any other slave, the packet composer will discard the SCO information and use the control information instead. This control information shall be sent in a DM1 packet. Data or link control information may also be exchanged between the master and the SCO slave by using the **DV** or **DM1** packets.

4.5.1.3 Mixed data/voice traffic

In Section 6.5.2 on page 109, a **DV** packet has been defined that can support both data and voice simultaneously on a single SCO logical transport. When the TYPE is **DV**, the Link Controller reads the data register to fill the data field and the voice register to fill the voice field. Thereafter, the switch S2 is changed. However, the position of S1 depends on the result of the transmission as on the ACL logical transport: only if an ACK has been received will the S1 switch change its position. In each **DV** packet, the voice information is new, but the data information might be retransmitted if the previous transmission failed. If there is no data to be sent, the SCO logical transport will automatically change from **DV** packet type to the current **HV** packet type used before the mixed data/voice transmission. Note that a **flush** command is necessary when the data stream has been interrupted and new data has arrived.

Combined data-voice transmission can also be accomplished by by using a separate ACL logical transport in addition to the SCO logical transport(s) if channel capacity permits this.

4.5.1.4 eSCO Traffic

On the eSCO logical transport only **EV**, **POLL** and **NULL** packet types are used, see Section 6.5.3 on page 110. The synchronous port may continuously load the next register in the synchronous buffer. The S2 switches are changed according to the T_{eSCO} interval. This T_{eSCO} interval is negotiated between the master and the slave at the time the eSCO logical transport is established.

For each new eSCO slot, the packet composer reads the current register after which the S2 switch is changed. If the eSCO slot has to be used to send control information with high priority concerning a control packet between the master and the eSCO slave, or an ACL packet between the master and any other slave, the packet composer will discard the eSCO information and use the control information instead. Control information to the eSCO slave is sent in a DM1 packet on the primary LT_ADDR.

4.5.1.5 Default packet types

On the ACL links, the default type is always **NULL** both for the master and the slave. This means that if no user information needs to be sent, either a **NULL** packet is sent if there is **ACK** or **STOP** information, or no packet is sent at all. The **NULL** packet can be used by the master to allocate the next slave-to-master slot to a certain slave (namely the one addressed). However, the slave is not forced to respond to the **NULL** packet from the master. If the master requires a response, it sends a **POLL** packet.

The SCO and eSCO packet types are negotiated at the LM level when the SCO or eSCO logical transport is established. The agreed packet type is also the default packet type for the reserved SCO or eSCO slots.

4.5.2 RX routine

The RX routine is carried out separately for the ACL logical transport and the synchronous logical transports. However, in contrast to the master TX asynchronous buffer, a single RX buffer is shared among all slaves. For the synchronous buffer, how the different synchronous logical transports are distinguished depends on whether extra synchronous buffers are required or not. Figure 4.2 on page 91 shows the asynchronous and synchronous buffers as used in the RX routine. The RX asynchronous buffer consists of two FIFO registers: one register that can be accessed and loaded by the Link Controller with the payload of the latest RX packet, and one register that can be accessed by the Baseband Resource Manager to read the previous payload. The RX synchronous buffer also consists of two FIFO registers: one register which is filled with newly arrived voice information, and one register which can be read by the voice processing unit.

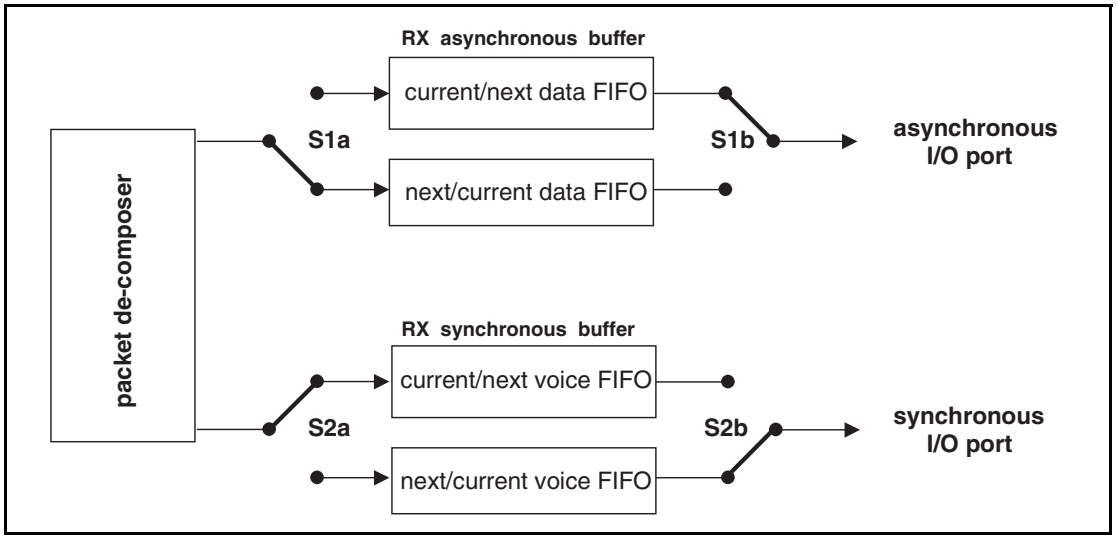

Figure 4.2: Functional diagram of RX buffering

Since the TYPE indication in the header (see Section 6.4.2 on page 103) of the received packet indicates whether the payload contains data and/or voice, the packet de-composer can automatically direct the traffic to the proper buffers. The switch S1 changes every time the Baseband Resource Manager reads the old register. If the next payload arrives before the RX register is emptied, a STOP indication is included in the packet header of the next TX packet that is returned. The STOP indication is removed again as soon as the RX register is emptied. The SEQN field is checked before a new ACL payload is stored into the asynchronous register (flush indication in LLID and broadcast messages influence the interpretation of the SEQN field see Section 7.6 on page 124).

The S2 switch is changed every T_{SCO} or T_{eSCO} for SCO and eSCO respectively. If, due to errors in the header, no new synchronous payload arrives, the switch still changes. The synchronous data processing unit then processes the synchronous data to account for the missing parts.

4.5.3 Flow control

Since the RX ACL buffer can be full while a new payload arrives, flow control is required. The header field FLOW in the return TX packet may use STOP or GO in order to control the transmission of new data.

4.5.3.1 Destination control

As long as data can not be received, a STOP indication shall be transmitted which is automatically inserted by the Link Controller into the header of the return packet. STOP shall be returned as long as the RX ACL buffer is not emptied by the Baseband Resource Manager. When new data can be accepted again, the GO indication shall be returned. GO shall be the default value. All packet types not including data can still be received. Voice communication for example is not affected by the flow control. Although a device can not receive new information, it may still continue to transmit information: the flow control shall be separate for each direction.

4.5.3.2 Source control

On the reception of a STOP signal, the Link Controller shall automatically switch to the default packet type. The ACL packet transmitted just before the reception of the STOP indication shall be kept until a GO signal is received. It may be retransmitted as soon as a GO indication is received. Only default packets shall be sent as long as the STOP indication is received. When no packet is received, GO shall be assumed implicitly. Note that the default packets contain link control information (in the header) for the receive direction (which may still be open) and may contain synchronous data (**HV** or **EV** packets). When a GO indication is received, the Link Controller may resume transmitting the data that is present in the TX ACL buffers.

In a multi-slave configuration, only the transmission to the slave that issued the STOP signal shall be stalled. This means that the master shall only stop transmission from the TX ACL buffer corresponding to the slave that momentarily cannot accept data.

4.6 ACTIVE SLAVE BROADCAST TRANSPORT

The active slave broadcast logical transport is used to transport L2CAP user traffic to all devices in the piconet that are currently connected to the piconet physical channel that is used by the ASB. There is no acknowledgement protocol and the traffic is uni-directional from the piconet master to the slaves. The ASB logical transport may only be used for L2CAP group traffic and shall never be used for L2CAP connection-oriented channels, L2CAP control signalling or LMP control signalling.

The ASB logical transport is unreliable. To improve reliability somewhat each packet is transmitted a number of times. An identical sequence number is used to assist with filtering retransmissions at the slave device.

The ASB logical transport is identified by the reserved, all-zero, LT_ADDR. Packets on the ASB logical transport may be sent by the master at any time.

4.7 PARKED SLAVE BROADCAST TRANSPORT

The parked slave broadcast logical transport is used for communication from the master to the slaves that are parked. The PSB logical transport is more complex than the other logical transports as it consists of a number of phases, each having a different purpose. These phases are the control information phase (used to carry the LMP logical link), the user information phase (used to carry the L2CAP logical link), and the access phase (carrying baseband signalling).

The PSB logical transport is identified by the reserved, all-zero, LT_ADDR.

4.7.1 Parked member address (PM_ADDR)

A slave in the **PARK** state can be identified by its BD_ADDR or by a dedicated parked member address (PM_ADDR). This latter address is an 8-bit member address that separates the parked slaves. The PM_ADDR shall only be valid as long as the slave is parked. When the slave is activated it shall be assigned an LT_ADDR but shall lose the PM_ADDR. The PM_ADDR is assigned to the slave by the master during the parking procedure (see [Part C] Section 4.5.2 on page 247).

The all-zero PM_ADDR shall be reserved for parked slaves that only use their BD_ADDR to be unparked.

4.7.2 Access request address (AR_ADDR)

The access request address (AR_ADDR) is used by the parked slave to determine the slave-to-master half slot in the access window where it is allowed to send access request messages, see also Section 8.9.6 on page 171. The AR_ADDR shall be assigned to the slave when it enters the **PARK** state and shall only be valid as long as the slave is parked. The AR_ADDR is not necessarily unique; i.e. different parked slaves may have the same AR_ADDR.

5 LOGICAL LINKS

Five logical links are defined:

- Link Control (LC)
- ACL Control (ACL-C)
- User Asynchronous/Isochronous (ACL-U)
- User Synchronous (SCO-S)
- User Extended Synchronous (eSCO-S)

The control logical links LC and ACL-C are used at the link control level and link manager level, respectively. The ACL-U logical link is used to carry either asynchronous or isochronous user information. The SCO-S, and eSCO-S logical links are used to carry synchronous user information. The LC logical link is carried in the packet header, all other logical links are carried in the packet payload. The ACL-C and ACL-U logical links are indicated in the logical link ID, LLID, field in the payload header. The SCO-S and eSCO-S logical links are carried by the synchronous logical transports only; the ACL-U link is normally carried by the ACL logical transport; however, they may also be carried by the data in the DV packet on the SCO logical transport. The ACL-C link may be carried either by the SCO or the ACL logical transport.

5.1 LINK CONTROL LOGICAL LINK (LC)

The LC control logical link shall be mapped onto the packet header. This logical link carries low level link control information like ARQ, flow control, and payload characterization. The LC logical link is carried in every packet except in the **ID** packet which does not have packet header.

5.2 ACL CONTROL LOGICAL LINK (ACL-C)

The ACL-C logical link shall carry control information exchanged between the link managers of the master and the slave(s). The ACL-C logical link shall use DM1 packets. The ACL-C logical link is indicated by the LLID code 11 in the payload header.

5.3 USER ASYNCHRONOUS/ISOCHRONOUS LOGICAL LINK (ACL-U)

The ACL-U logical link shall carry L2CAP asynchronous and isochronous user data. These messages may be transmitted in one or more baseband packets. For fragmented messages, the start packet shall use an LLID code of 10 in the payload header. Remaining continuation packets shall use LLID code 01. If there is no fragmentation, all packets shall use the LLID start code 10.

5.3.1 Pausing the ACL-U logical link

When paused by LM, the Link Controller transmits the current packet with ACL-U information, if any, until an ACK is received or, optionally, until an explicit NACK is received. While the ACL-U logical link is paused, the Link Controller shall not transmit any packets with ACL-U logical link information.

If the ACL-U was paused after an ACK, the next sequence number shall be used on the next packet. If the ACL-U was paused after a NAK, the same sequence number shall be used on the next packet and the un-acknowledged packet shall be transmitted once the ACL-U logical link is un-paused.

When the ACL-U logical link is un-paused by LM, the Link Controller may resume transmitting packets with ACL-U information.

5.4 USER SYNCHRONOUS DATA LOGICAL LINK (SCO-S)

The SCO-S logical link carries transparent synchronous user data. This logical link is carried over the synchronous logical transport SCO.

5.5 USER EXTENDED SYNCHRONOUS DATA LOGICAL LINK (eSCO-S)

The eSCO-S logical link also carries transparent synchronous user data. This logical link is carried over the extended synchronous logical transport eSCO.

5.6 LOGICAL LINK PRIORITIES

The ACL-C logical link shall have a higher priority than the ACL-U logical link when scheduling traffic on the shared ACL logical transport, except in the case when retransmissions of unacknowledged ACL packets shall be given priority over traffic on the ACL-C logical link. The ACL-C logical link should also have priority over traffic on the SCO-S and eSCO-S logical links but opportunities for interleaving the logical links should be taken.

6 PACKETS

Bluetooth devices shall use the packets as defined in the following sections.

6.1 GENERAL FORMAT

The general packet format is shown in Figure 6.1 on page 97. Each packet consists of 3 entities: the access code, the header, and the payload. In the figure, the number of bits per entity is indicated.

LSB 68/72	54	0 - 2745 MSB
ACCESS CODE	HEADER	PAYLOAD

Figure 6.1: General packet format.

The access code is 72 or 68 bits and the header is 54 bits. The payload ranges from zero to a maximum of 2745 bits. Different packet types have been defined. Packet may consist of:

- the shortened access code only (see ID packet on page 116)
- the access code and the packet header
- the access code, the packet header and the payload.

6.2 BIT ORDERING

The bit ordering when defining packets and messages in the *Baseband Specification*, follows the *Little Endian* format. The following rules apply:

- The *least significant bit* (LSB) corresponds to b_0;
- The LSB is the first bit sent over the air;
- In illustrations, the LSB is shown on the left side;

Furthermore, data fields generated internally at baseband level, such as the packet header fields and payload header length, shall be transmitted with the LSB first. For instance, a 3-bit parameter X=3 is sent as:

$$b_0 b_1 b_2 = 110$$

over the air where 1 is sent first and 0 is sent last.

6.3 ACCESS CODE

Every packet starts with an access code. If a packet header follows, the access code is 72 bits long, otherwise the access code is 68 bits long and is known as a shortened access code. The shortened access code does not contain a trailer. This access code is used for synchronization, DC offset compensation and identification. The access code identifies all packets exchanged on a physical channel: all packets sent in the same physical channel are preceded by the same access code. In the receiver of the device, a sliding correlator correlates against the access code and triggers when a threshold is exceeded. This trigger signal is used to determine the receive timing.

The shortened access code is used in paging, inquiry, and park. In this case, the access code itself is used as a signalling message and neither a header nor a payload is present.

The access code consists of a preamble, a sync word, and possibly a trailer, see Figure 6.2 on page 98. For details see Section 6.3.1 on page 98.

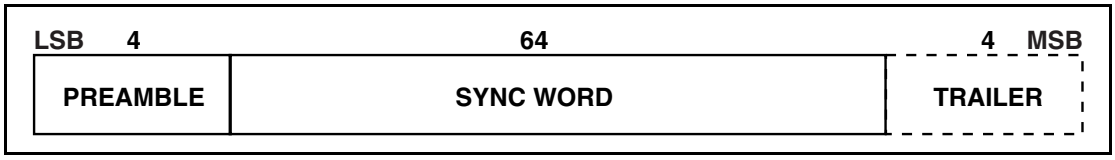

Figure 6.2: Access code format

6.3.1 Access code types

The different access code types use different Lower Address Parts (LAPs) to construct the sync word. The LAP field of the BD_ADDR is explained in Section 1.2 on page 55. A summary of the different access code types is in Table 6.1 on page 98.

Code type	LAP	Code length	Comments
CAC	Master	72	See also Section 1.3 on page 56
DAC	Paged device	68/72[1]	
GIAC	Reserved	68/72*	
DIAC	Dedicated	68/72*	

Table 6.1: Summary of access code types.

1. length 72 is only used in combination with FHS packets

The CAC consists of a **preamble**, **sync word**, and **trailer** and its total length is 72 bits. When used as self-contained messages without a header, the DAC and IAC do not include the trailer bits and are of length 68 bits.

6.3.2 Preamble

The preamble is a fixed zero-one pattern of 4 symbols used to facilitate DC compensation. The sequence is either 1010 or 0101, depending on whether the LSB of the following sync word is 1 or 0, respectively. The preamble is shown in Figure 6.3 on page 99.

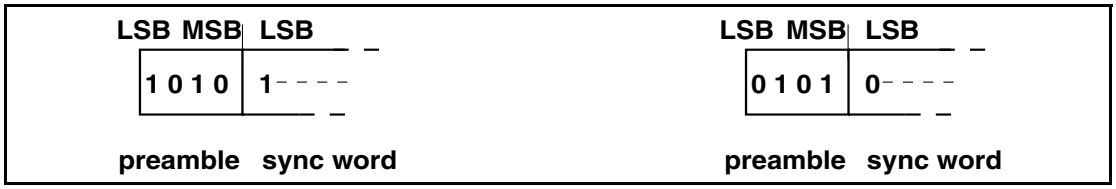

Figure 6.3: Preamble

6.3.3 Sync word

The sync word is a 64-bit code word derived from a 24 bit address (LAP); for the CAC the master's LAP is used; for the GIAC and the DIAC, reserved, dedicated LAPs are used; for the DAC, the slave LAP is used. The construction guarantees large Hamming distance between sync words based on different LAPs. In addition, the good auto correlation properties of the sync word improve timing acquisition.

6.3.3.1 Synchronization word definition

The sync words are based on a (64,30) expurgated block code with an overlay (bit-wise XOR) of a 64 bit full length pseudo-random noise (PN) sequence. The expurgated code guarantees large Hamming distance ($d_{min} = 14$) between sync words based on different addresses. The PN sequence improves the auto correlation properties of the access code. The following steps describe how the sync word shall be generated:

1. Generate information sequence;
2. XOR this with the "information covering" part of the PN overlay sequence;
3. Generate the codeword;
4. XOR the codeword with all 64 bits of the PN overlay sequence;

The information sequence is generated by appending 6 bits to the 24 bit LAP (step 1). The appended bits are 001101 if the MSB of the LAP equals 0. If the MSB of the LAP is 1 the appended bits are 110010. The LAP MSB together with the appended bits constitute a length-seven Barker sequence. The purpose of including a Barker sequence is to further improve the auto correlation properties. In step 2 the information is pre-scrambled by XORing it with the bits $p_{34} \ldots p_{63}$ of the PN sequence (defined in section 6.3.3.2 on page 102). After generating the codeword (step 3), the complete PN sequence is XORed to the

codeword (step 4). This step de-scrambles the information part of the codeword. At the same time the parity bits of the codeword are scrambled. Consequently, the original LAP and Barker sequence are ensured a role as a part of the access code sync word, and the cyclic properties of the underlying code is removed. The principle is depicted in Figure 6.4 on page 100

In the following discussion, binary sequences will be denoted by their corresponding D-transform (in which D^i represents a delay of *i* time units). Let $p'(D) = p'_0 + p'_1 D + \ldots + p'_{62} D^{62}$ be the 63 bit PN sequence, where p'_0 is the first bit (LSB) leaving the PRNG (see Figure 6.5 on page 102), and, p'_{62} is the last bit (MSB). To obtain 64 bits, an extra zero is appended at the *end* of this sequence (thus, $p'(D)$ is unchanged). For notational convenience, the reciprocal of this extended polynomial, $p(D) = D^{63} p'(1/D)$, will be used in the following discussion. This is the sequence $p'(D)$ in reverse order. We denote the 24 bit lower address part (LAP) of the Bluetooth device address by $a(D) = a_0 + a_1 D + \ldots + a_{23} D^{23}$ (a_0 is the LSB of the Bluetooth device address).

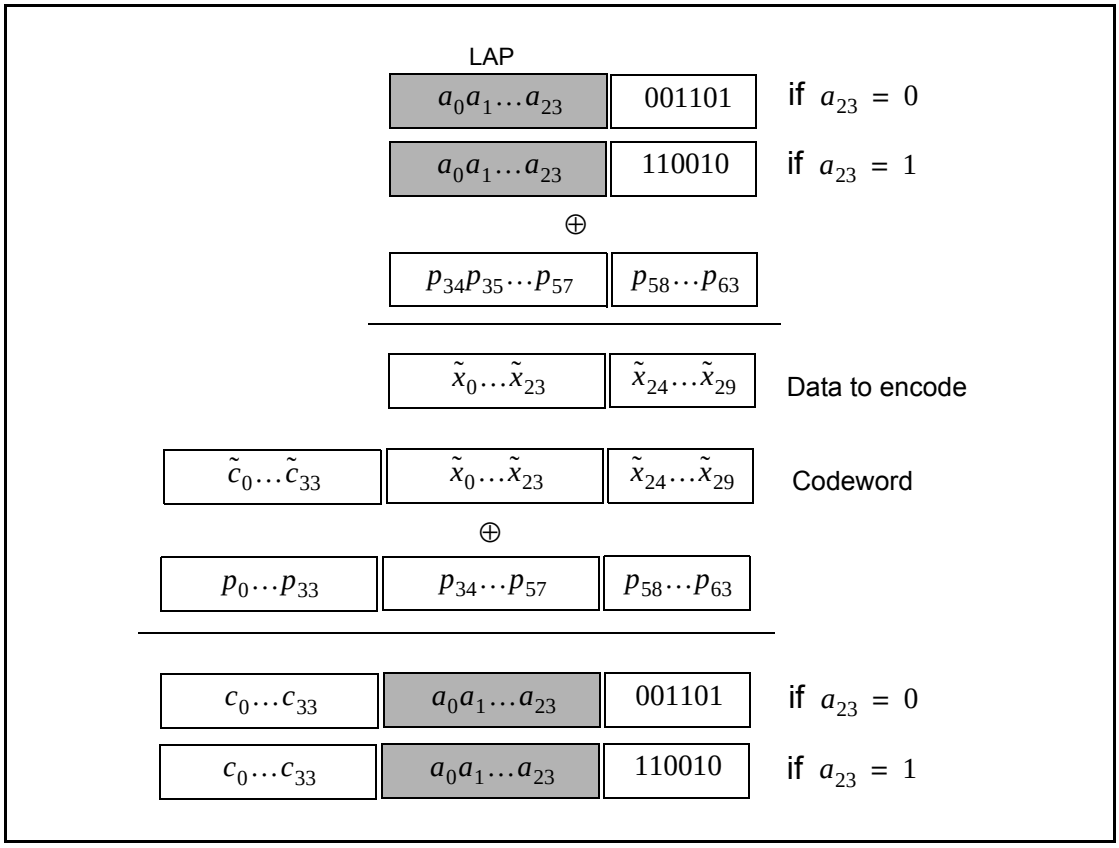

Figure 6.4: Construction of the sync word.

The (64,30) block code generator polynomial is denoted $g(D) = (1 + D) g'(D)$, where $g'(D)$ is the generator polynomial `157464165547` (octal notation) of a primitive binary (63,30) BCH code. Thus, in octal notation *g(D)* is

$$g(D) = 260534236651, \quad \text{(EQ 8)}$$

the left-most bit corresponds to the high-order (g_{34}) coefficient.The DC-free four bit sequences `0101` and `1010` can be written

$$\begin{cases} F_0(D) = D + D^3, \\ F_1(D) = 1 + D^2, \end{cases} \quad \text{(EQ 9)}$$

respectively. Furthermore,

$$\begin{cases} B_0(D) = D^2 + D^3 + D^5, \\ B_1(D) = 1 + D + D^4, \end{cases} \quad \text{(EQ 10)}$$

which are used to create the length seven Barker sequences. Then, the access code shall be generated by the following procedure:

1. Format the 30 information bits to encode:

$$x(D) = a(D) + D^{24}B_{a_{23}}(D).$$

2. Add the information covering part of the PN overlay sequence:

$$\tilde{x}(D) = x(D) + p_{34} + p_{35}D + \ldots + p_{63}D^{29}.$$

3. Generate parity bits of the (64,30) expurgated block code:[1]

$$\tilde{c}(D) = D^{34}\tilde{x}(D) \mod g(D).$$

4. Create the codeword:

$$\tilde{s}(D) = D^{34}\tilde{x}(D) + \tilde{c}(D).$$

5. Add the PN sequence:

$$s(D) = \tilde{s}(D) + p(D).$$

6. Append the (DC-free) preamble and trailer:

$$y(D) = F_{c_0}(D) + D^4 s(D) + D^{68}F_{a_{23}}(D).$$

1. $x(D)$ mod $y(D)$ denotes the remainder when $x(D)$ is divided by $y(D)$.

6.3.3.2 Pseudo-random noise sequence generation

To generate the PN sequence the primitive polynomial $h(D) = 1 + D + D^3 + D^4 + D^6$ shall be used. The LFSR and its starting state are shown in Figure 6.5 on page 102. The PN sequence generated (including the extra terminating zero) becomes (hexadecimal notation) `83848D96BBCC54FC`. The LFSR output starts with the left-most bit of this PN sequence. This corresponds to $p'(D)$ of the previous section. Thus, using the reciprocal $p(D)$ as overlay gives the 64 bit sequence:

$$\boldsymbol{p} = 3F2A33DD69B121C1, \qquad \text{(EQ 11)}$$

where the left-most bit is $p_0 = 0$ (there are two initial zeros in the binary representation of the hexadecimal digit 3), and $p_{63} = 1$ is the right-most bit.

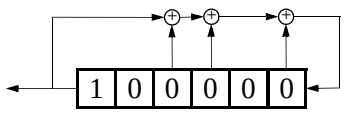

Figure 6.5: LFSR and the starting state to generate $p'(D)$.

6.3.4 Trailer

The trailer is appended to the sync word as soon as the packet header follows the access code. This is typically the case with the CAC, but the trailer is also used in the DAC and IAC when these codes are used in FHS packets exchanged during page response and inquiry response.

The trailer is a fixed zero-one pattern of four symbols. The trailer together with the three MSBs of the syncword form a 7-bit pattern of alternating ones and zeroes which may be used for extended DC compensation. The trailer sequence is either 1010 or 0101 depending on whether the MSB of the sync word is 0 or 1, respectively. The choice of trailer is illustrated in Figure 6.6 on page 102.

Figure 6.6: Trailer in CAC when MSB of sync word is 0 (a), and when MSB of sync word is 1 (b).

6.4 PACKET HEADER

The header contains link control (LC) information and consists of 6 fields:

- LT_ADDR: 3- bit logical transport address
- TYPE: 4-bit type code
- FLOW: 1-bit flow control
- ARQN: 1-bit acknowledge indication
- SEQN: 1-bit sequence number
- HEC: 8-bit header error check

The total header, including the HEC, consists of 18 bits, see Figure 6.7 on page 103, and is encoded with a rate 1/3 FEC (not shown but described in Section 7.4 on page 122) resulting in a 54-bit header. The LT_ADDR and TYPE fields shall be sent LSB first.

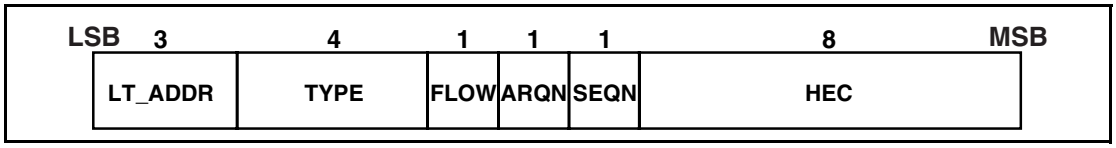

Figure 6.7: Header format.

6.4.1 LT_ADDR

The 3-bit LT_ADDR field contains the logical transport address for the packet (see Section 4.2 on page 85). This field indicates the destination slave for a packet in a master-to-slave transmission slot and indicates the source slave for a slave-to-master transmission slot.

6.4.2 TYPE

Sixteen different types of packets can be distinguished. The 4-bit TYPE code specifies which packet type is used. The interpretation of the TYPE code depends on the logical transport address in the packet. First, it shall be determined whether the packet is sent on an SCO logical transport, an eSCO logical transport, or an ACL logical transport. Then it can be determined which type of SCO packet, eSCO packet, or ACL packet has been received. The TYPE code determines how many slots the current packet will occupy (see the slot occupancy column in Table 6.2 on page 105). This allows the non-addressed receivers to refrain from listening to the channel for the duration of the remaining slots. In Section 6.5 on page 105, each packet type is described in more detail.

6.4.3 FLOW

The FLOW bit is used for flow control of packets over the ACL logical transport. When the RX buffer for the ACL logical transport in the recipient is full, a STOP indication (FLOW=0) shall be returned to stop the other device from transmitting data temporarily. The STOP signal only affects ACL packets. Packets including only link control information (ID, POLL, and NULL packets), SCO packets or eSCO packets can still be received. When the RX buffer can accept data, a GO indication (FLOW=1) shall be returned. When no packet is received, or the received header is in error, a GO shall be assumed implicitly. In this case, the slave can receive a new packet with CRC although its RX buffer is still not emptied. The slave shall then return a NAK in response to this packet even if the packet passed the CRC check.

The FLOW bit is not used on the eSCO logical transport or the ACL-C logical link and shall be set to one on transmission and ignored upon receipt.

6.4.4 ARQN

The 1-bit acknowledgment indication ARQN is used to inform the source of a successful transfer of payload data with CRC, and can be positive acknowledge ACK or negative acknowledge NAK. See Section 7.6 on page 124 for initialization and usage of this bit.

6.4.5 SEQN

The SEQN bit provides a sequential numbering scheme to order the data packet stream. See section 7.6.2 on page 127 for initialization and usage of the SEQN bit. For broadcast packets, a modified sequencing method is used, see Section 7.6.5 on page 130.

6.4.6 HEC

Each header has a header-error-check to check the header integrity. The HEC is an 8-bit word (generation of the HEC is specified in Section 7.1.1 on page 118). Before generating the HEC, the HEC generator is initialized with an 8-bit value. For FHS packets sent in **master response** substate, the slave upper address part (UAP) shall be used. For FHS packets sent in **inquiry response**, the default check initialization (DCI, see Section 1.2.1 on page 55) shall be used. In all other cases, the UAP of the master device shall be used.

After the initialization, a HEC shall be calculated for the 10 header bits. Before checking the HEC, the receiver shall initialize the HEC check circuitry with the proper 8-bit UAP (or DCI). If the HEC does not check, the entire packet shall be discarded. More information can be found in Section 7.1 on page 118.

6.5 PACKET TYPES

The packets used on the piconet are related to the logical transports they are used in. Three logical transports with distinct packet types are defined (see Section 4 on page 85): the SCO logical transport, the eSCO logical transport, and the ACL logical transport. For each of these logical transports, 15 different packet types can be defined.

To indicate the different packets on a logical transport, the 4-bit TYPE code is used. The packet types are divided into four segments. The first segment is reserved for control packets. All control packets occupy a single time slot. The second segment is reserved for packets occupying a single time slot. The third segment is reserved for packets occupying three time slots. The fourth segment is reserved for packets occupying five time slots. The slot occupancy is reflected in the segmentation and can directly be derived from the type code. Table 6.2 on page 105 summarizes the packets defined for the SCO, eSCO, and ACL logical transport types.

Segment	TYPE code $b_3b_2b_1b_0$	Slot occupancy	SCO logical transport	eSCO logical transport	ACL logical transport
1	0000	1	NULL	NULL	NULL
	0001	1	POLL	POLL	POLL
	0010	1	FHS	reserved	FHS
	0011	1	DM1	reserved	DM1
2	0100	1	undefined	undefined	DH1
	0101	1	HV1	undefined	undefined
	0110	1	HV2	undefined	undefined
	0111	1	HV3	EV3	undefined
	1000	1	DV	undefined	undefined
	1001	1	undefined	undefined	AUX1
3	1010	3	undefined	undefined	DM3
	1011	3	undefined	undefined	DH3
	1100	3	undefined	EV4	undefined
	1101	3	undefined	EV5	undefined
4	1110	5	undefined	undefined	DM5
	1111	5	undefined	undefined	DH5

Table 6.2: Packets defined for synchronous and asynchronous logical transport types.

6.5.1 Common packet types

There are five common kinds of packets. In addition to the types listed in segment 1 of the previous table, the ID packet is also a common packet type but is not listed in segment 1 because it does not have a packet header.

6.5.1.1 ID packet

The identity or ID packet consists of the device access code (DAC) or inquiry access code (IAC). It has a fixed length of 68 bits. It is a very robust packet since the receiver uses a bit correlator to match the received packet to the known bit sequence of the ID packet.

6.5.1.2 NULL packet

The NULL packet has no payload and consists of the channel access code and packet header only. Its total (fixed) length is 126 bits. The NULL packet may be used to return link information to the source regarding the success of the previous transmission (ARQN), or the status of the RX buffer (FLOW). The NULL packet may not have to be acknowledged.

6.5.1.3 POLL packet

The POLL packet is very similar to the NULL packet. It does not have a payload. In contrast to the NULL packet, it requires a confirmation from the recipient. It is not a part of the ARQ scheme. The POLL packet does not affect the ARQN and SEQN fields. Upon reception of a POLL packet the slave shall respond with a packet even when the slave does not have any information to send unless the slave has scatternet commitments in that timeslot. This return packet is an implicit acknowledgement of the POLL packet. This packet can be used by the master in a piconet to poll the slaves. Slaves shall not transmit the POLL packet.

6.5.1.4 FHS packet

The FHS packet is a special control packet containing, among other things, the Bluetooth device address and the clock of the sender. The payload contains 144 information bits plus a 16-bit CRC code. The payload is coded with a rate 2/3 FEC with a gross payload length of 240 bits.

Figure 6.8 on page 107 illustrates the format and contents of the FHS payload. The payload consists of eleven fields. The FHS packet is used in page master response, inquiry response and in role switch.

The FHS packet contains real-time clock information. This clock information shall be updated before each retransmission. The retransmission of the FHS payload is different than retransmissions of ordinary data payloads where the same payload is used for each retransmission. The FHS packet is used for fre-

quency hop synchronization before the piconet channel has been established, or when an existing piconet changes to a new piconet.

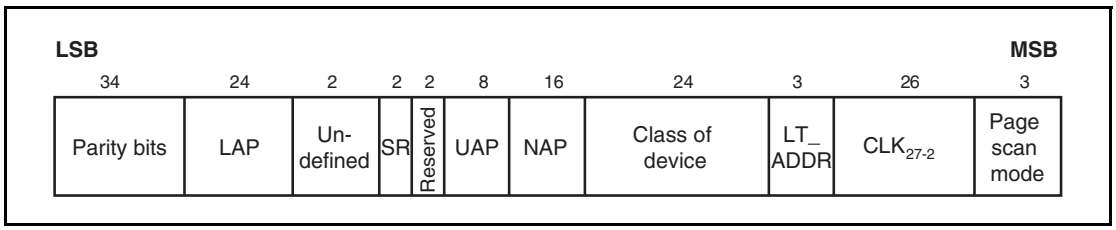

Figure 6.8: Format of the FHS payload.

Each field is described in more detail below:

Parity bits	This 34-bit field contains the parity bits that form the first part of the sync word of the access code of the device that sends the FHS packet. These bits are derived from the LAP as described in Section 1.2 on page 55.
LAP	This 24-bit field shall contain the lower address part of the device that sends the FHS packet.
Undefined	This 2-bit field is reserved for future use and shall be set to zero.
SR	This 2-bit field is the scan repetition field and indicates the interval between two consecutive page scan windows, see also Table 6.4 and Table 8.1 on page 135
Reserved	This 2-bit field shall be set to 10.
UAP	This 8-bit field shall contain the upper address part of the device that sends the FHS packet.
NAP	This 16-bit field shall contain the non-significant address part of the device that sends the FHS packet (see also Section 1.2 on page 55 for LAP, UAP, and NAP).
Class of device	This 24-bit field shall contain the class of device of the device that sends the FHS packet. The field is defined in Bluetooth Assigned Numbers (https://www.bluetooth.org/foundry/assignnumb/document/assigned_numbers).
LT_ADDR	This 3-bit field shall contain the logical transport address the recipient shall use if the FHS packet is used at connection setup or role switch. A slave responding to a master or a device responding to an inquiry request message shall include an all-zero LT_ADDR field if it sends the FHS packet.
CLK_{27-2}	This 26-bit field shall contain the value of the native clock of the device that sends the FHS packet, sampled at the beginning of the transmission of the access code of this FHS packet. This clock value has a resolution of 1.25ms (two-slot interval). For each new transmission, this field is updated so that it accurately reflects the real-time clock value.
Page scan mode	This 3-bit field shall indicate which scan mode is used by default by the sender of the FHS packet. The interpretation of the page scan mode is illustrated in Table 6.5.

Table 6.3: Description of the FHS payload

The device sending the FHS shall set the SR bits according to Table 6.4.

SR bit format b_1b_0	**SR mode**
00	R0
01	R1
10	R2
11	reserved

Table 6.4: Contents of SR field

The device sending the FHS shall set the page scan mode bits according to Table 6.5.

Bit format $b_2b_1b_0$	**Page scan mode**
000	Mandatory scan mode
001	Reserved for future use
010	Reserved for future use
011	Reserved for future use
100	Reserved for future use
101	Reserved for future use
110	Reserved for future use
111	Reserved for future use

Table 6.5: Contents of page scan mode field

The LAP, UAP, and NAP together form the 48-bit Bluetooth Device Address of the device that sends the FHS packet. Using the parity bits and the LAP, the recipient can directly construct the channel access code of the sender of the FHS packet.

When initializing the HEC and CRC for the FHS packet of inquiry response, the UAP shall be the DCI.

6.5.1.5 DM1 packet

DM1 is part of segment 1 in order to support control messages in any logical transport that allows the DM1 packet (see Table 6.2 on page 105). However, it may also carry regular user data. Since the DM1 packet can be regarded as an ACL packet, it will be discussed in Section 6.5.4 on page 111.

6.5.2 SCO packets

HV and DV packets are used on the synchronous SCO logical transport. The HV packets do not include a CRC and shall not be retransmitted. DV packets include a CRC on the data section, but not on the synchronous data section. The data section of DV packets shall be retransmitted. SCO packets may be routed to the synchronous I/O port. Four packets are allowed on the SCO logical transport: HV1, HV2, HV3 and DV. These packets are typically used for 64kb/s speech transmission but may be used for transparent synchronous data.

6.5.2.1 HV1 packet

The **HV1** packet has 10 information bytes. The bytes are protected with a rate 1/3 FEC. No CRC is present. The payload length is fixed at 240 bits. There is no payload header present.

6.5.2.2 HV2 packet

The **HV2** packet has 20 information bytes. The bytes are protected with a rate 2/3 FEC. No CRC is present. The payload length is fixed at 240 bits. There is no payload header present.

6.5.2.3 HV3 packet

The **HV3** packet has 30 information bytes. The bytes are not protected by FEC. No CRC is present. The payload length is fixed at 240 bits. There is no payload header present.

6.5.2.4 DV packet

The **DV** packet is a combined data - voice packet.The DV packet shall only be used in place of an HV1 packet. The payload is divided into a voice field of 80 bits and a data field containing up to 150 bits, see Figure 6.9. The voice field is not protected by FEC. The data field has between 1 and 10 information bytes (including the 1-byte payload header) and includes a 16-bit CRC. The data field is encoded with a rate 2/3 FEC. Since the **DV** packet has to be sent at regular intervals due to its synchronous contents, it is listed under the SCO packet types. The voice and data fields shall be treated separately. The voice field shall be handled in the same way as normal SCO data and shall never be retransmitted; that is, the voice field is always new. The data field is checked for errors and shall be retransmitted if necessary. When the asynchronous data field in the DV packet has not be acknowledged before the SCO logical transport is terminated, the asynchronous data field shall be retransmitted in a DM1 packet.

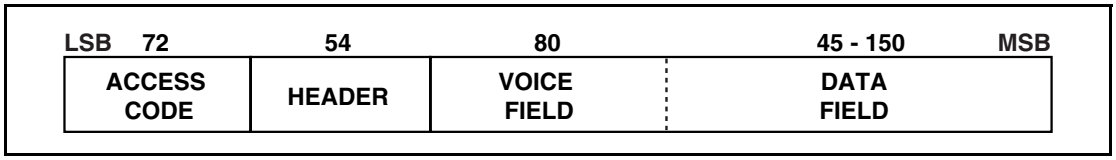

Figure 6.9: DV packet format

6.5.3 eSCO packets

EV packets are used on the synchronous eSCO logical transport. The packets include a CRC and retransmission may be applied if no acknowledgement of proper reception is received within the retransmission window. eSCO packets may be routed to the synchronous I/O port. Three eSCO packets have been defined. The eSCO packets may be used for 64kb/s speech transmission as well as transparent data at 64kb/s and other rates.

6.5.3.1 EV3 packet

The **EV3** packet has between 1 and 30 information bytes plus a 16-bit CRC code. The bytes are not protected by FEC. The EV3 packet may cover up to a single time slot. There is no payload header present. The payload length is set during the LMP eSCO setup and remains fixed until the link is removed or re-negotiated.

6.5.3.2 EV4 packet

The **EV4** packet has between 1 and 120 information bytes plus a 16-bit CRC code. The EV4 packet may cover to up three time slots. The information plus CRC bits are coded with a rate 2/3 FEC. There is no payload header present. The payload length is set during the LMP eSCO setup and remains fixed until the link is removed or re-negotiated.

6.5.3.3 EV5 packet

The **EV5** packet has between 1 and 180 information bytes plus a 16-bit CRC code. The bytes are not protected by FEC. The EV5 packet may cover up to three time slots. There is no payload header present. The payload length is set during the LMP eSCO setup and remains fixed until the link is removed or re-negotiated.

6.5.4 ACL packets

ACL packets are used on the asynchronous logical transport. The information carried may be user data or control data.

6.5.4.1 DM1 packet

The DM1 packet carries data information only. The payload has between 1 and 18 information bytes (including the 1-byte payload header) plus a 16-bit CRC code. The DM1 packet occupies a single time slot. The information plus CRC bits are coded with a rate 2/3 FEC. The payload header in the DM1 packet is 1 byte long, see Figure 6.10 on page 113. The length indicator in the payload header specifies the number of user bytes (excluding payload header and the CRC code).

6.5.4.2 DH1 packet

This packet is similar to the DM1 packet, except that the information in the payload is not FEC encoded. As a result, the DH1 packet has between 1 and 28 information bytes (including the 1-byte payload header) plus a 16-bit CRC code. The DH1 packet occupies a single time slot.

6.5.4.3 DM3 packet

The DM3 packet may occupy up to three time slots. The payload has between 2 and 123 information bytes (including the 2-byte payload header) plus a 16-bit CRC code. The information plus CRC bits are coded with a rate 2/3 FEC. The payload header in the DM3 packet is 2 bytes long, see Figure 6.11 on page 113. The length indicator in the payload header specifies the number of user bytes (excluding payload header and the CRC code).

6.5.4.4 DH3 packet

This packet is similar to the DM3 packet, except that the information in the payload is not FEC encoded. As a result, the DH3 packet has between 2 and 185 information bytes (including the 2-byte payload header) plus a 16-bit CRC code. The DH3 packet may occupy up to three time slots.

6.5.4.5 DM5 packet

The DM5 packet may occupy up to five time slots. The payload has between 2 and 226 information bytes (including the 2-byte payload header) plus a 16-bit CRC code. The payload header in the DM5 packet is 2 bytes long. The information plus CRC bits are coded with a rate 2/3 FEC. The length indicator in the payload header specifies the number of user bytes (excluding payload header and the CRC code).

6.5.4.6 DH5 packet

This packet is similar to the DM5 packet, except that the information in the payload is not FEC encoded. As a result, the DH5 packet has between 2 and 341 information bytes (including the2-byte payload header) plus a 16-bit CRC code. The DH5 packet may occupy up to five time slots.

6.5.4.7 AUX1 packet

This packet resembles a DH1 packet but has no CRC code. The AUX1 packet has between 1 and 30 information bytes (including the 1-byte payload header). The AUX1 packet occupies a single time slot. The AUX1 packet shall not be used for the ACL-U or ACL-C logical links. An AUX1 packet may be discarded.

6.6 PAYLOAD FORMAT

In the payload, two fields are distinguished: the synchronous data field and the asynchronous data field. The ACL packets only have the asynchronous data field and the SCO and eSCOpackets only have the synchronous data field – with the exception of the DV packets which have both.

6.6.1 Synchronous data field

In SCO, the synchronous data field has a fixed length and consists only of the synchronous data body portion. No payload header is present.

In eSCO, the synchronous data field consists of two segments: a synchronous data body and a CRC code. No payload header is present.

1. **Synchronous data body**

   For HV and DV packets, the synchronous data body length is fixed. For EV packets, the synchronous data body length is negotiated during the LMP eSCO setup. Once negotiated, the synchronous data body length remains constant unless re-negotiated. The synchronous data body length may be different for each direction of the eSCO logical transport.

2. **CRC code**

   The 16-bit CRC in the payload is generated as specified in Section 7.1 on page 118. The 8-bit UAP of the master is used to initialize the CRC generator.

6.6.2 Asynchronous data field

ACL packets have an asynchronous data field consisting of two or three segments: a payload header, a payload body, and possibly a CRC code (the AUX1 packet does not carry a CRC code).

1. Payload header

The payload header is one or two bytes long. Packets in segments one and two have a 1-byte payload header; packets in segments three and four have a 2-byte payload header. The payload header specifies the logical link (2-bit LLID indication), controls the flow on the logical channels (1-bit FLOW indication), and has a payload length indicator (5 bits and 9 bits for 1-byte and 2-byte payload headers, respectively). In the case of a 2-byte payload header, the length indicator is extended by four bits into the next byte. The remaining four bits of the second byte are reserved for future use and shall be set to zero. The formats of the 1-byte and 2-byte payload headers are shown in Figure 6.10 on page 113 and Figure 6.11 on page 113.

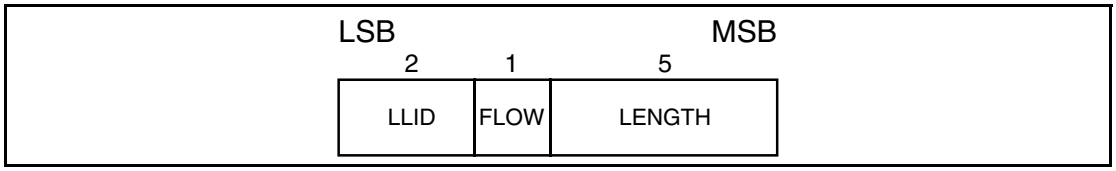

Figure 6.10: Payload header format for single-slot ACL packets.

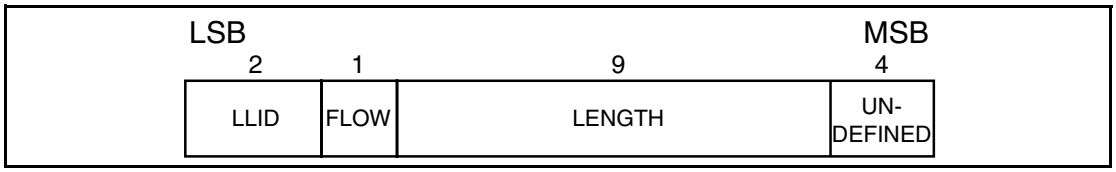

Figure 6.11: Payload header format for multi-slot ACL packets.

The LLID field shall be transmitted first, the length field last. In Table 6.6 on page 113, more details about the contents of the LLID field are listed.

LLID code b_1b_0	**Logical Link**	**Information**
00	NA	undefined
01	ACL-U	Continuation fragment of an L2CAP message
10	ACL-U	Start of an L2CAP message or no fragmentation
11	ACL-C	LMP message

Table 6.6: Logical link LLID field contents

An L2CAP message may be fragmented into several packets. Code 10 shall be used for an ACL-U packet carrying the first fragment of such a message; code 01 shall be used for continuing fragments. If there is no fragmentation, code 10 shall be used for every packet. Code 11 shall be used for LMP messages. Code 00 is reserved for future use.

The flow indicator in the payload is used to control the flow at the L2CAP level. It is used to control the flow per logical link. FLOW=1 means flow-on (GO) and FLOW=0 means flow-off (STOP). After a new connection has been established the flow indicator shall be set to GO. When a device receives a payload header with the flow bit set to STOP, it shall stop the transmission of ACL packets before an additional amount of payload data is sent. This amount is defined as the flow control lag, expressed as a number of bytes. The shorter the flow control lag, the less buffering the other device must dedicate to this function. The flow control lag shall not exceed 1792 bytes (7×256 bytes). In order to allow devices to optimize the selection of packet length and buffer space, the flow control lag of a given implementation shall be provided in the LMP_features_res message.

If a packet containing the payload flow bit of STOP is received, with a valid packet header but bad payload, the payload flow control bit shall be ignored. The baseband ACK contained in the packet header will be received and a further ACL packet may be transmitted. Each occurrence of this situation allows a further ACL packet to be sent in spite of the flow control request being sent via the payload header flow control bit. It is recommended that devices that use the payload header flow bit should ensure that no further ACL packets are sent until the payload flow bit has been correctly received. This can be accomplished by simultaneously turning on the flow bit in the packet header and keeping it on until an ACK is received back (ARQN=1). This will typically be only one round trip time. Since they lack a payload CRC, AUX1 packets should not be used with a payload flow bit of STOP.

The Baseband Resource Manager is responsible for setting and processing the flow bit in the payload header. Real-time flow control shall be carried out at the packet level by the link controller via the flow bit in the packet header (see Section 6.4.3 on page 104). With the payload flow bit, traffic from the remote end can be controlled. It is allowed to generate and send an ACL packet with payload length zero irrespective of flow status. L2CAP start-fragment and continue-fragment indications (LLID=10 and LLID=01) also retain their meaning when the payload length is equal to zero (i.e. an empty start-fragment shall not be sent in the middle of an on-going ACL-U packet transmission). It is always safe to send an ACL packet with length=0 and LLID=01. The payload flow bit has its own meaning for each logical link (ACL-U or ACL-C), Table 6.7 on page 115. On the ACL-C logical link, no flow control is applied and the payload FLOW bit shall always be set to one.

LLID code b_1b_0	**Usage and semantics of the ACL payload header FLOW bit**
00	Not defined, reserved for future use.
01 or 10	Flow control of the ACL-U channel (L2CAP messages)
11	Always set FLOW=1 on transmission and ignore the bit on reception

Table 6.7: Use of payload header flow bit on the logical links.

The length indicator shall be set to the number of bytes (i.e. 8-bit words) in the payload excluding the payload header and the CRC code; i.e. the payload body only. With reference to Figure 6.10 and Figure 6.11, the MSB of the length field in a 1-byte header is the last (right-most) bit in the payload header; the MSB of the length field in a 2-byte header is the fourth bit (from left) of the second byte in the payload header.

2. Payload body

The payload body includes the user information and determines the effective user throughput. The length of the payload body is indicated in the length field of the payload header.

3. CRC code generation

The 16-bit cyclic redundancy check code in the payload is generated as specified in Section 7.1 on page 118. Before determining the CRC code, an 8-bit value is used to initialize the CRC generator. For the CRC code in the FHS packets sent in **master response** substate, the UAP of the slave is used. For the FHS packet sent in **inquiry response** substate, the DCI (see Section 1.2.1 on page 55) is used. For all other packets, the UAP of the master is used.

6.7 PACKET SUMMARY

A summary of the packets and their characteristics is shown in Table 6.8, Table 6.9 and Table 6.10. The payload represents the packet payload excluding FEC, CRC, and payload header.

Type	Payload (bytes)	FEC	CRC	Symmetric Max. Rate	Asymmetric Max. Rate
ID	na	na	na	na	na
NULL	na	na	na	na	na
POLL	na	na	na	na	na
FHS	18	2/3	yes	na	na

Table 6.8: Link control packets

Type	Payload Header (bytes)	Payload (bytes)	FEC	CRC	Symmetric Max. Rate (kb/s)	Asymmetric Max. Rate (kb/s)	
						Forward	Reverse
DM1	1	0-17	2/3	yes	108.8	108.8	108.8
DH1	1	0-27	no	yes	172.8	172.8	172.8
DM3	2	0-121	2/3	yes	258.1	387.2	54.4
DH3	2	0-183	no	yes	390.4	585.6	86.4
DM5	2	0-224	2/3	yes	286.7	477.8	36.3
DH5	2	0-339	no	yes	433.9	723.2	57.6
AUX1	1	0-29	no	no	185.6	185.6	185.6

Table 6.9: ACL packets

Type	Payload Header (bytes)	Payload (bytes)	FEC	CRC	Symmetric Max. Rate (kb/s)
HV1	na	10	1/3	no	64.0
HV2	na	20	2/3	no	64.0
HV3	na	30	no	no	64.0
DV[1]	1 D	10+(0-9) D	2/3 D	yes D	64.0+57.6 D
EV3	na	1-30	No	Yes	96
EV4	na	1-120	2/3	Yes	192
EV5	na	1-180	No	Yes	288

Table 6.10: Synchronous packets

1. Items followed by ‘D’ relate to data field only.

7 BITSTREAM PROCESSING

Bluetooth devices shall use the bitstream processing schemes as defined in the following sections.

Before the payload is sent over the air interface, several bit manipulations are performed in the transmitter to increase reliability and security. An HEC is added to the packet header, the header bits are scrambled with a whitening word, and FEC coding is applied. In the receiver, the inverse processes are carried out. Figure 7.1 on page 117 shows the processes carried out for the packet header both at the transmit and the receive side. All header bit processes are mandatory.

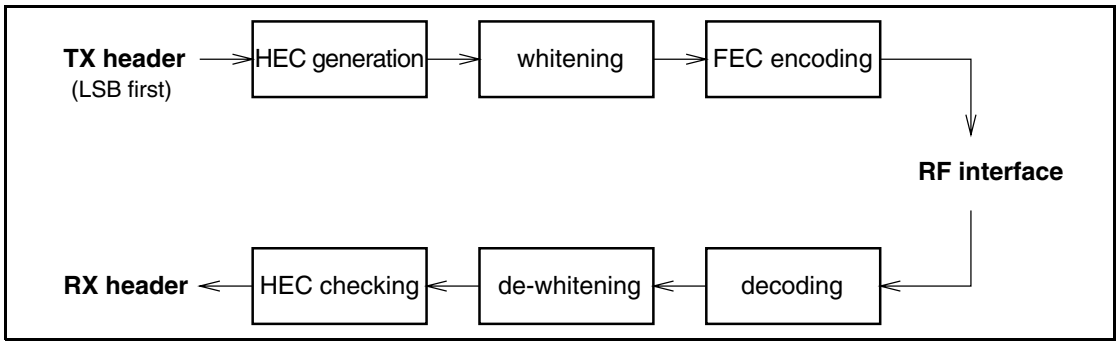

Figure 7.1: Header bit processes.

Figure 7.2 on page 117 shows the processes that may be carried out on the payload. In addition to the processes defined for the packet header, encryption can be applied on the payload. Only whitening and de-whitening, as explained in Section 7.2 on page 121, are mandatory for every payload; all other processes are optional and depend on the packet type (see Section 6.6 on page 112) and whether encryption is enabled. In Figure 7.2 on page 117, optional processes are indicated by dashed blocks.

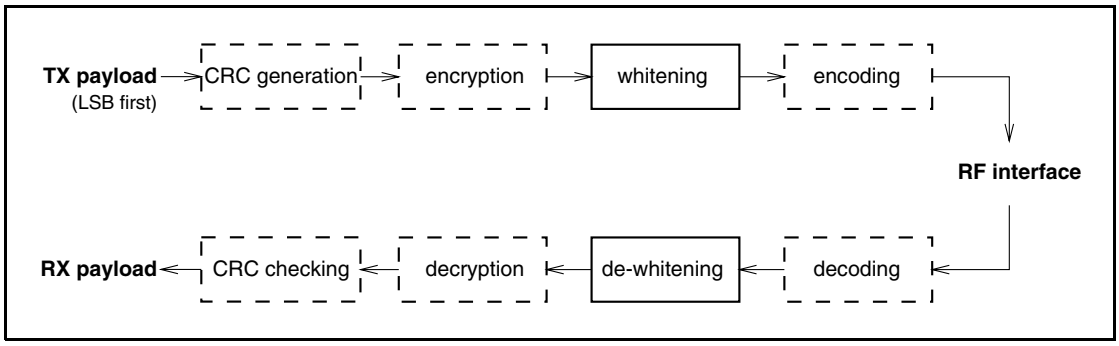

Figure 7.2: Payload bit processes.

7.1 ERROR CHECKING

The packet can be checked for errors or wrong delivery using the channel access code, the HEC in the header, and the CRC in the payload. At packet reception, the access code is checked first. Since the 64-bit sync word in the channel access code is derived from the 24-bit master LAP, this checks if the LAP is correct, and prevents the receiver from accepting a packet of another piconet (provided the LAP field of the master's BD_ADDR is different).

The HEC and CRC computations are normally initialized with the UAP of the master. Even though the access code may be the same for two piconets the different UAP values will typically cause the HEC and CRC to fail. However, there is an exception where no common UAP is available in the transmitter and receiver. This is the case when the HEC and CRC are generated for the FHS packet in **inquiry response** substate. In this case the DCI value shall be used.

The generation and check of the HEC and CRC are summarized in Figure 7.5 on page 119 and Figure 7.8 on page 120. Before calculating the HEC or CRC, the shift registers in the HEC/CRC generators shall be initialized with the 8-bit UAP (or DCI) value. Then the header and payload information shall be shifted into the HEC and CRC generators, respectively (with the LSB first).

7.1.1 HEC generation

The HEC generating LFSR is depicted in Figure 7.3 on page 118. The generator polynomial is $g(D) = (D+1)(D^7+D^4+D^3+D^2+1) = D^8+D^7+D^5+D^2+D+1$. Initially this circuit shall be pre-loaded with the 8-bit UAP such that the LSB of the UAP (denoted UAP_0) goes to the left-most shift register element, and, UAP_7 goes to the right-most element. The initial state of the HEC LFSR is depicted in Figure 7.4 on page 119. Then the data shall be shifted in with the switch S set in position 1. When the last data bit has been clocked into the LFSR, the switch S shall be set in position 2, and, the HEC can be read out from the register. The LFSR bits shall be read out from right to left (i.e., the bit in position 7 is the first to be transmitted, followed by the bit in position 6, etc.).

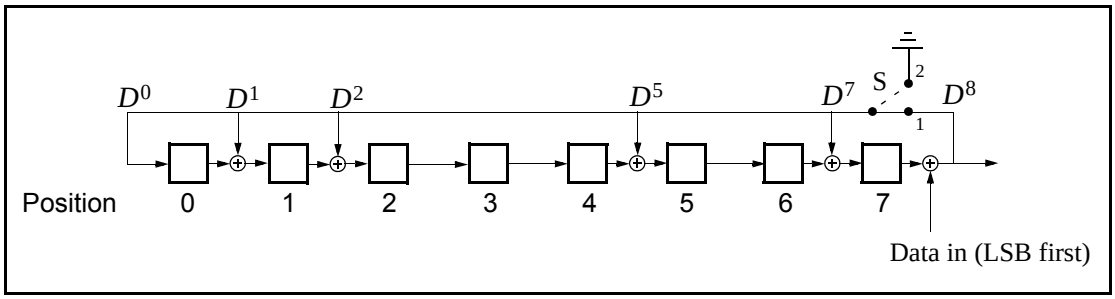

Figure 7.3: The LFSR circuit generating the HEC.

Position:	0	1	2	3	4	5	6	7
LFSR:	UAP_0	UAP_1	UAP_2	UAP_3	UAP_4	UAP_5	UAP_6	UAP_7

Figure 7.4: Initial state of the HEC generating circuit.

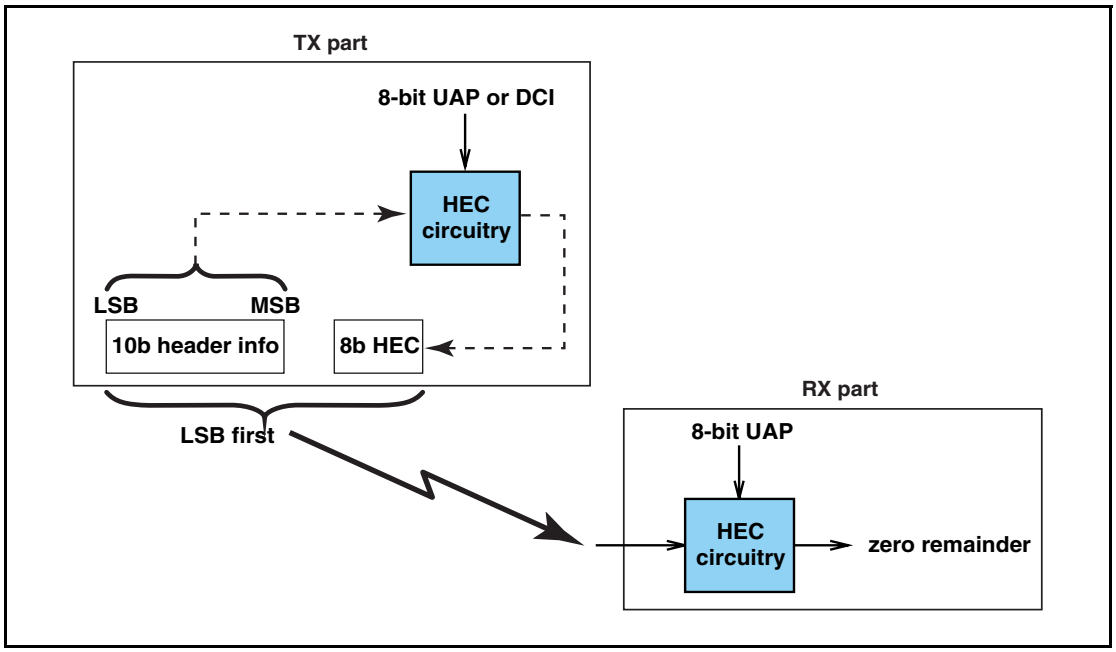

Figure 7.5: HEC generation and checking.

7.1.2 CRC generation

The 16 bit LFSR for the CRC is constructed similarly to the HEC using the CRC-CCITT generator polynomial $g(D) = D^{16} + D^{12} + D^5 + 1$ (i.e. `210041` in octal representation) (see Figure 7.6 on page 120). For this case, the 8 left-most bits shall be initially loaded with the 8-bit UAP (UAP_0 to the left and UAP_7 to the right) while the 8 right-most bits shall be reset to zero. The initial state of the 16 bit LFSR is specified in Figure 7.7 on page 120. The switch S shall be set in position 1 while the data is shifted in. After the last bit has entered the LFSR, the switch shall be set in position 2, and, the register's contents shall be transmitted, from right to left (i.e., starting with position 15, then position 14, etc.).

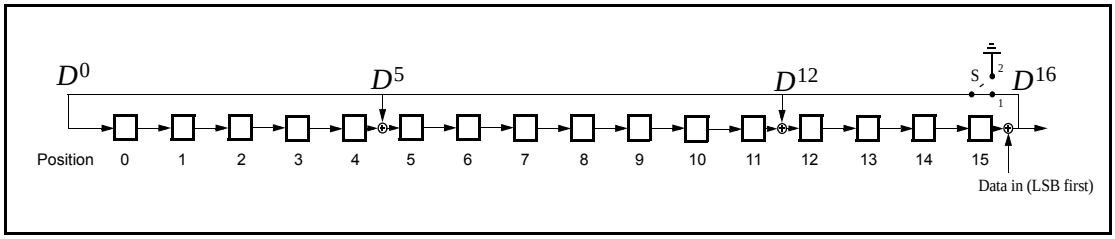

Figure 7.6: The LFSR circuit generating the CRC.

Position:	0	1	2	3	4	5	6	7	8	9	10	11	12	13	14	15
LFSR:	UAP_0	UAP_1	UAP_2	UAP_3	UAP_4	UAP_5	UAP_6	UAP_7	0	0	0	0	0	0	0	0

Figure 7.7: Initial state of the CRC generating circuit.

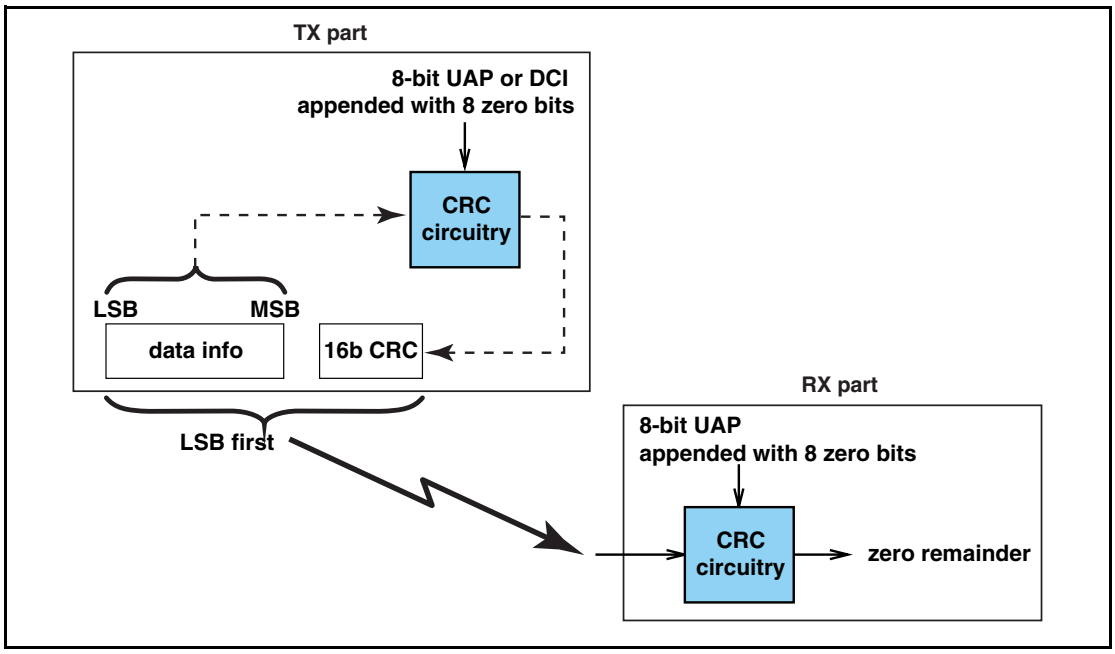

Figure 7.8: CRC generation and checking.

7.2 DATA WHITENING

Before transmission, both the header and the payload shall be scrambled with a data whitening word in order to randomize the data from highly redundant patterns and to minimize DC bias in the packet. The scrambling shall be performed prior to the FEC encoding.

At the receiver, the received data shall be descrambled using the same whitening word generated in the recipient. The descrambling shall be performed after FEC decoding.

The whitening word is generated with the polynomial $g(D) = D^7 + D^4 + 1$ (i.e., `221` in octal representation) and shall be subsequently XORed with the header and the payload. The whitening word is generated with the linear feedback shift register shown in Figure 7.9 on page 121. Before each transmission, the shift register shall be initialized with a portion of the master Bluetooth clock, $CLK_{6\text{-}1}$, extended with an MSB of value one. This initialization shall be carried out with CLK_1 written to position 0, CLK_2 written to position 1, etc. An exception is the FHS packet sent during page response or inquiry, where initialization of the whitening register shall be carried out differently. Instead of the master clock, the X-input used in the **inquiry** or **page response** (depending on current state) routine shall be used, see Table 2.2. The 5-bit value shall be extended with two MSBs of value 1. During register initialization, the LSB of X (i.e., X_0) shall be written to position 0, X_1 shall be written to position 1, etc.

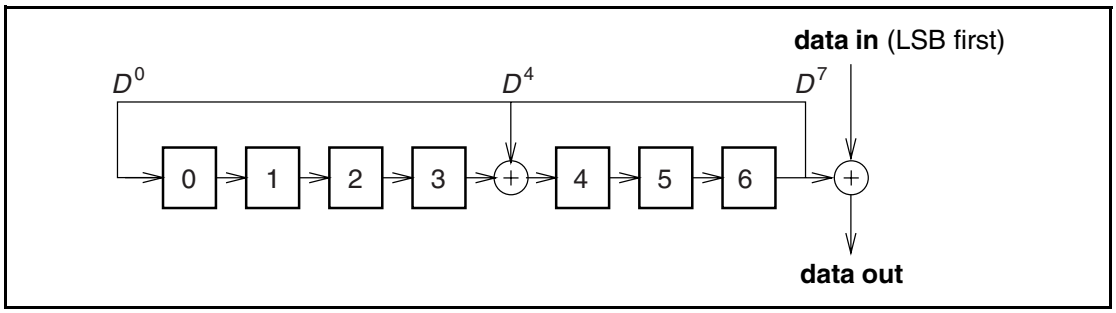

Figure 7.9: Data whitening LFSR.

After initialization, the packet header and the payload (including the CRC) are whitened. The payload whitening shall continue from the state the whitening LFSR had at the end of HEC. There shall be no re-initialization of the shift register between packet header and payload. The first bit of the “data in” sequence shall be the LSB of the packet header.

7.3 ERROR CORRECTION

There are three error correction schemes defined for Bluetooth:

- 1/3 rate FEC
- 2/3 rate FEC
- ARQ scheme for the data

The purpose of the FEC scheme on the data payload is to reduce the number of retransmissions. However, in a reasonable error-free environment, FEC gives unnecessary overhead that reduces the throughput. Therefore, the packet definitions given in Section 6 on page 97 have been kept flexible to use FEC in the payload or not, resulting in the **DM** and **DH** packets for the ACL logical transport, **HV** packets for the SCO logical transport, and **EV** packets for the eSCO logical transport. The packet header is always protected by a 1/3 rate FEC since it contains valuable link information and is designed to withstand more bit errors.

Correction measures to mask errors in the voice decoder are not included in this section. This matter is discussed in Section 9.3 on page 176.

7.4 FEC CODE: RATE 1/3

A simple 3-times repetition FEC code is used for the header. The repetition code is implemented by repeating each bit three times, see the illustration in Figure 7.10 on page 122. The 3-times repetition code is used for the entire header, as well as for the synchronous data field in the **HV1** packet.

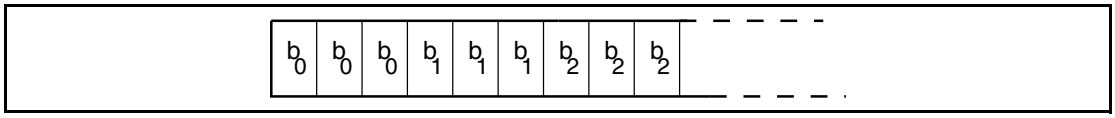

Figure 7.10: Bit-repetition encoding scheme.

7.5 FEC CODE: RATE 2/3

The other FEC scheme is a (15,10) shortened Hamming code. The generator polynomial is $g(D) = (D+1)(D^4+D+1)$. This corresponds to 65 in octal notation. The LFSR generating this code is depicted in Figure 7.11 on page 123. Initially all register elements are set to zero. The 10 information bits are sequentially fed into the LFSR with the switches S1 and S2 set in position 1. Then, after the final input bit, the switches S1 and S2 are set in position 2, and the five parity bits are shifted out. The parity bits are appended to the information bits. Subsequently, each block of 10 information bits is encoded into a 15 bit codeword. This code can correct all single errors and detect all double errors in each codeword. This 2/3 rate FEC is used in the **DM** packets, in the data field of the **DV** packet, in the **FHS** packet, in the **HV2** packet, and in the **EV4** packet. Since the encoder operates with information segments of length 10, tail bits with value zero shall be appended after the CRC bits to bring the total number of bits equal to a multiple of 10. The number of tail bits to append shall be the least possible that achieves this (i.e., in the interval 0...9). These tail bits are not included in the payload length indicator for ACL packets or in the payload length field of the eSCO setup LMP command.

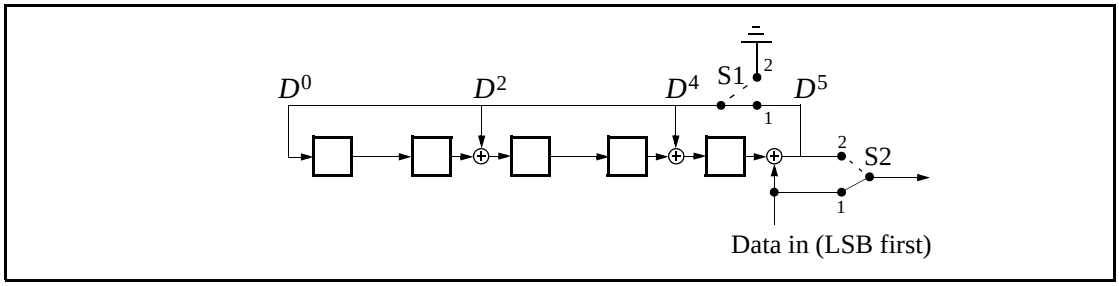

Figure 7.11: LFSR generating the (15,10) shortened Hamming code.

7.6 ARQ SCHEME

With an automatic repeat request scheme, **DM, DH** the data field of **DV** packets, and **EV** packets shall be transmitted until acknowledgement of a successful reception is returned by the destination (or timeout is exceeded). The acknowledgement information shall be included in the header of the return packet. The ARQ scheme is only used on the payload in the packet and only on packets that have a CRC. The packet header and the synchronous data payload of HV and DV packets are not protected by the ARQ scheme.

7.6.1 Unnumbered ARQ

Bluetooth uses a fast, unnumbered acknowledgment scheme. An ACK (ARQN=1) or a NAK (ARQN=0) is returned in response to the receipt of previously received packet. The slave shall respond in the slave-to-master slot directly following the master-to-slave slot unless the slave has scatternet commitments in that timeslot; the master shall respond at the next event addressing the same slave (the master may have addressed other slaves between the last received packet from the considered slave and the master response to this packet). For a packet reception to be successful, at least the HEC must pass. In addition, the CRC must pass if present.

In the first POLL packet at the start of a new connection (as a result of a page, page scan, role switch or unpark) the master shall initialize the ARQN bit to NAK. The response packet sent by the slave shall also have the ARQN bit set to NAK. The subsequent packets shall use the following rules. The initial value of the master's eSCO ARQN at link set-up shall be NAK.

The ARQ bit shall only be affected by data packets containing CRC and empty slots. As shown in Figure 7.12 on page 125, upon successful reception of a CRC packet, the ARQN bit shall be set to ACK. If, in any receive slot in the slave, or, in a receive slot in the master following transmission of a packet, one of these events applies:

1. no access code is detected,
2. the HEC fails,
3. the CRC fails,

then the ARQN bit shall be set to NAK. In eSCO the ARQN bit may be set to ACK even when the CRC on an EV packet has failed thus enabling delivery of erroneous packets.

Packets that have correct HEC but that are addressed to other slaves, or packets other than DH, DM, DV or EV packets, shall not affect the ARQN bit, except as noted in Section 7.6.2.2 on page 128. In these cases the ARQN bit shall be left as it was prior to reception of the packet. For ACL packets, if a CRC packet with a correct header has the same SEQN as the previously received CRC packet, the ARQN bit shall be set to ACK and the payload shall be ignored without checking the CRC. For eSCO packets, the SEQN shall not be used

when determining the ARQN. If an eSCO packet has been received successfully within the eSCO window subsequent receptions within the eSCO window shall be ignored. At the end of the eSCO window, the master's ARQN shall be retained for the first master-to-slave transmission in the next eSCO window.

The ARQ bit in the FHS packet is not meaningful. Contents of the ARQN bit in the FHS packet shall not be checked.

Broadcast packets shall be checked on errors using the CRC, but no ARQ scheme shall be applied. Broadcast packets shall never be acknowledged.

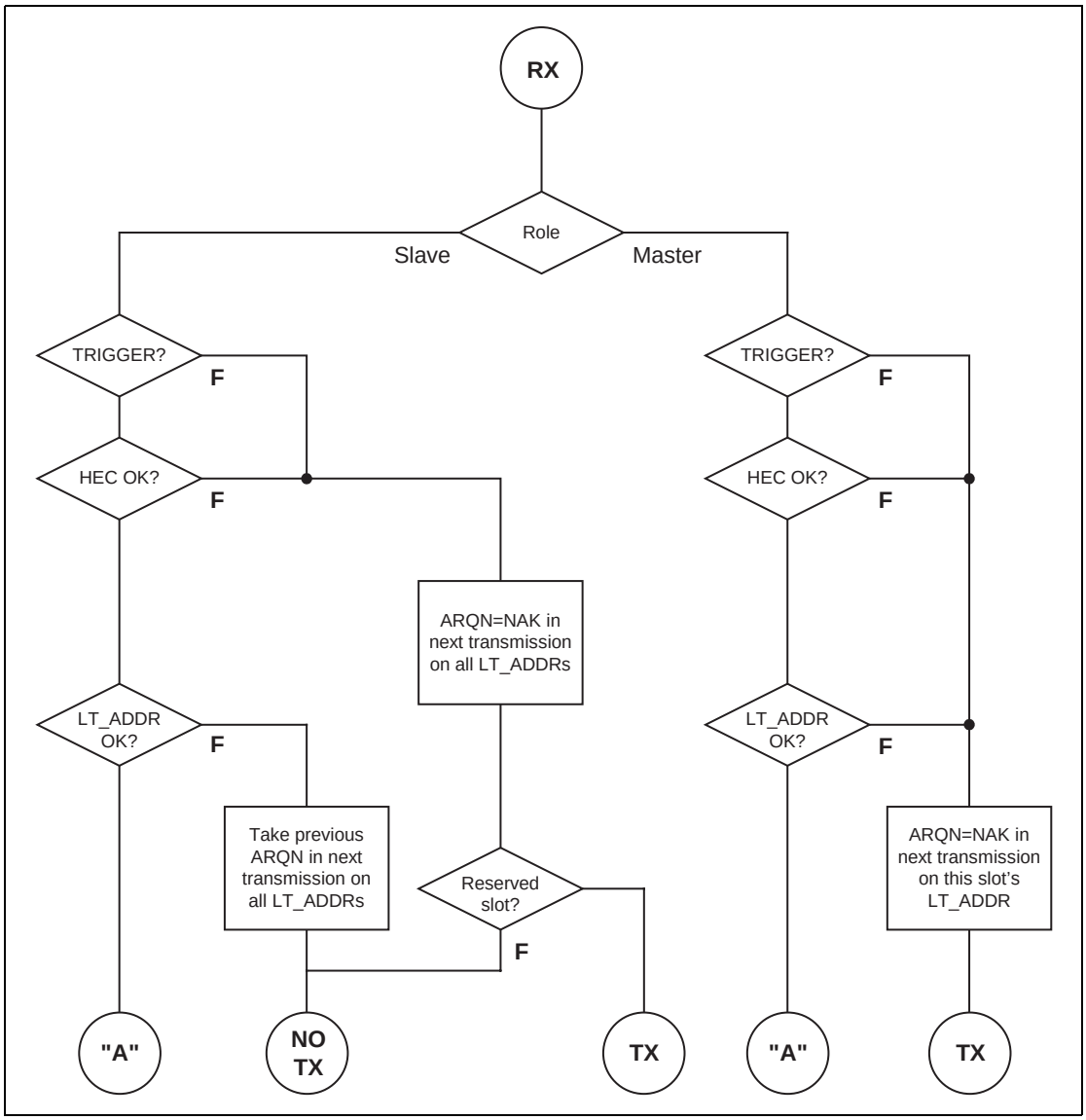

Figure 7.12: Stage 1 of the receive protocol for determining the ARQN bit.

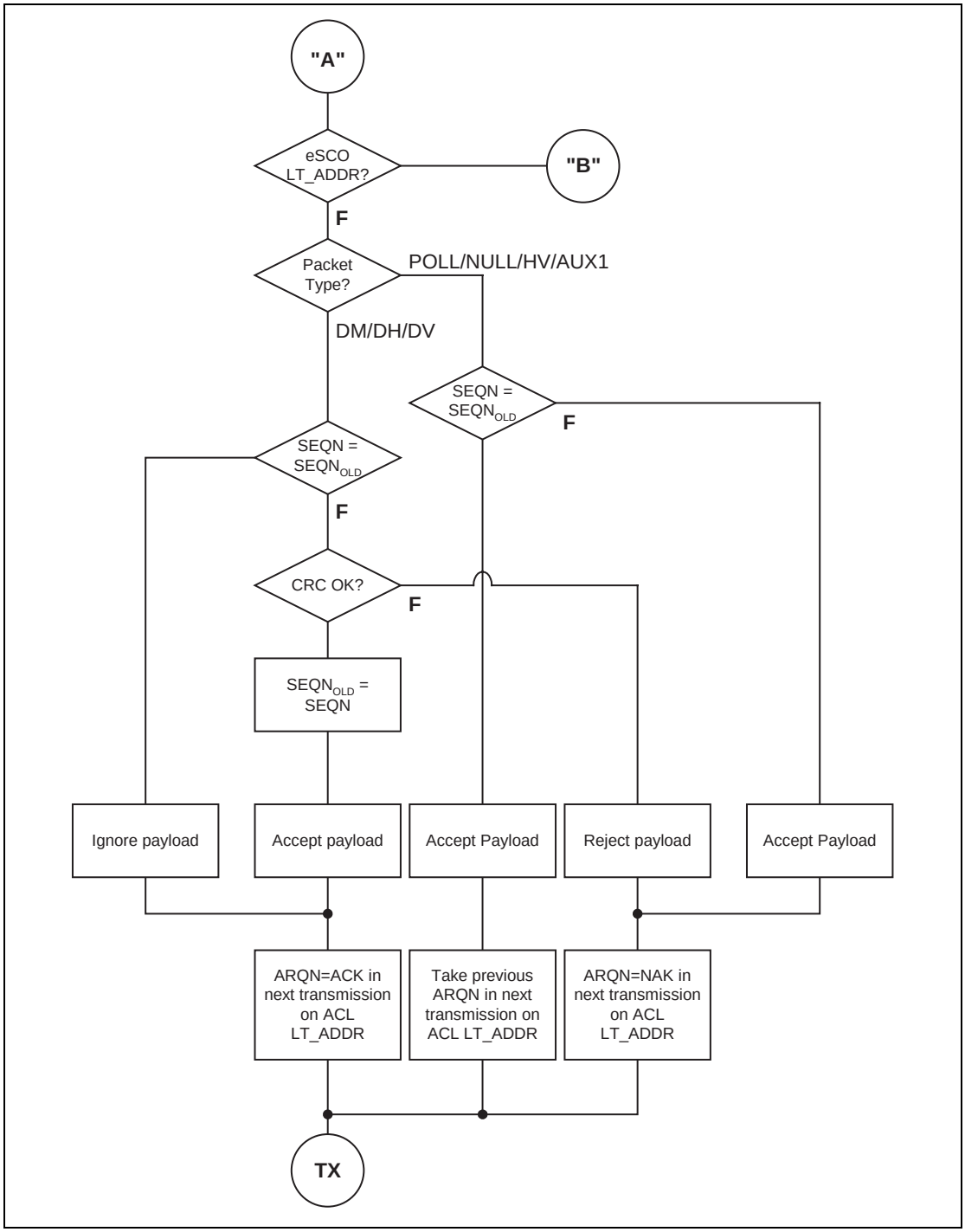

Figure 7.13: Stage 2 (ACL) of the receive protocol for determining the ARQN bit.

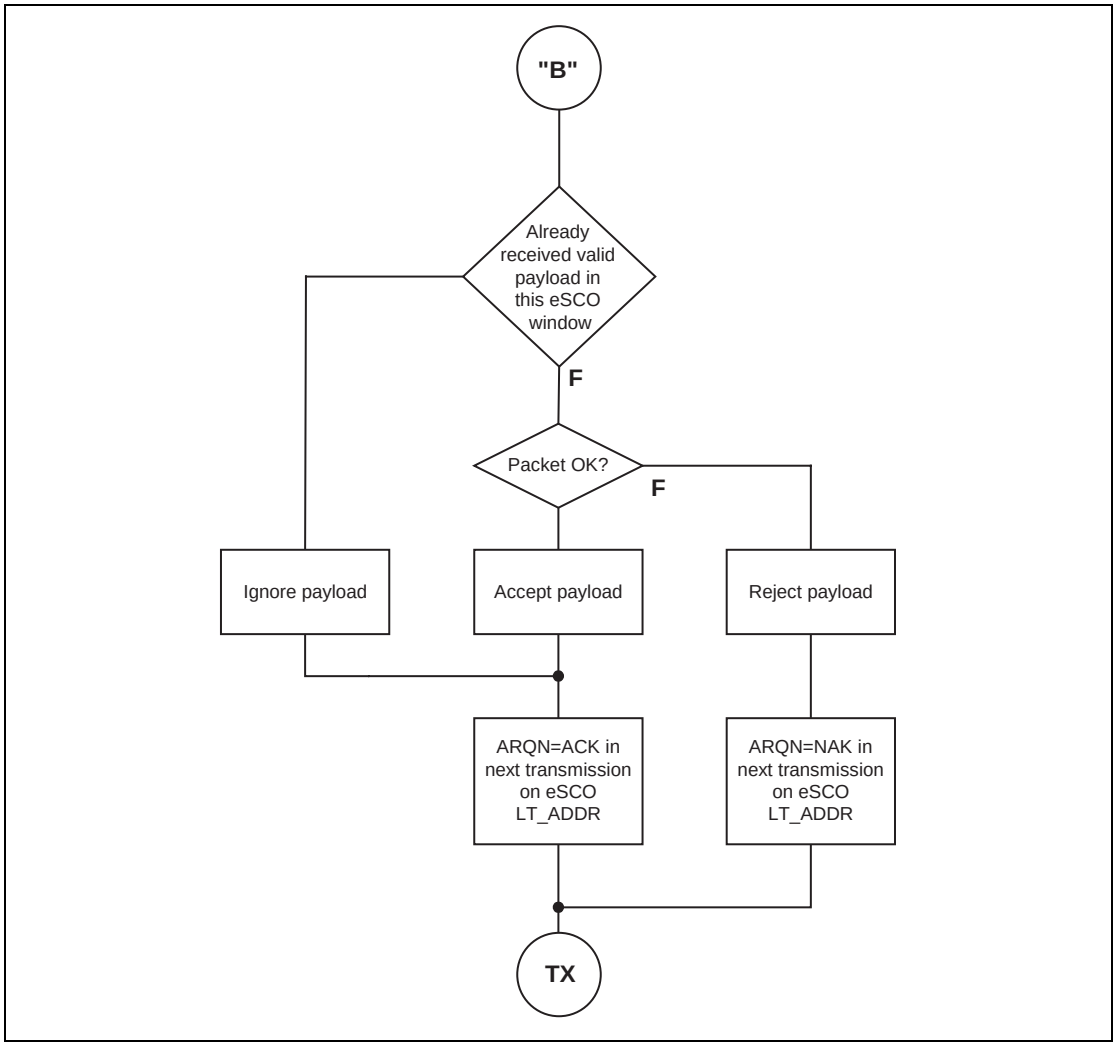

Figure 7.14: Stage 2 (eSCO) of the receive protocol for determining the ARQN bit.

7.6.2 Retransmit filtering

The data payload shall be transmitted until a positive acknowledgment is received or a timeout is exceeded. A retransmission shall be carried out either because the packet transmission itself failed, or because the acknowledgment transmitted in the return packet failed (note that the latter has a lower failure probability since the header is more heavily coded). In the latter case, the destination keeps receiving the same payload over and over again. In order to filter out the retransmissions in the destination, the SEQN bit is present in the header. Normally, this bit is alternated for every new CRC data payload transmission. In case of a retransmission, this bit shall not be changed so the destination can compare the SEQN bit with the previous SEQN value. If different, a new data payload has arrived; otherwise it is the same data payload and may be ignored. Only new data payloads shall be transferred to the Baseband Resource Manager. Note that CRC data payloads can be carried only by **DM**, **DH**, **DV** or **EV** packets.

7.6.2.1 Initialization of SEQN at start of new connection

The SEQN bit of the first CRC data packet at the start of a connection (as a result of page, page scan, role switch or unpark) on both the master and the slave sides shall be set to 1. The subsequent packets shall use the rules in the following sections.

7.6.2.2 ACL and SCO retransmit filtering

The SEQN bit shall only be affected by the CRC data packets as shown in Figure 7.15. It shall be inverted every time a new CRC data packet is sent. The CRC data packet shall be retransmitted with the same SEQN number until an ACK is received or the packet is flushed. When an ACK is received, a new payload may be sent and on that transmission the SEQN bit shall be inverted. If a device decides to flush (see Section 7.6.3 on page 130), and it has not received an acknowledgement for the current packet, it shall replace the current packet with an ACL-U continuation packet with the same sequence number as the current packet and length zero. If it replaces the current packet in this way it shall not move on to transmit the next packet until it has received an ack.

If the slave receives a packet other than DH, DM, DV or EV with the SEQN bit inverted from that in the last header succesfully received on the same LT_ADDR, it shall set the ARQN bit to NAK until a DH, DM, DV or EV packet is successfully received.

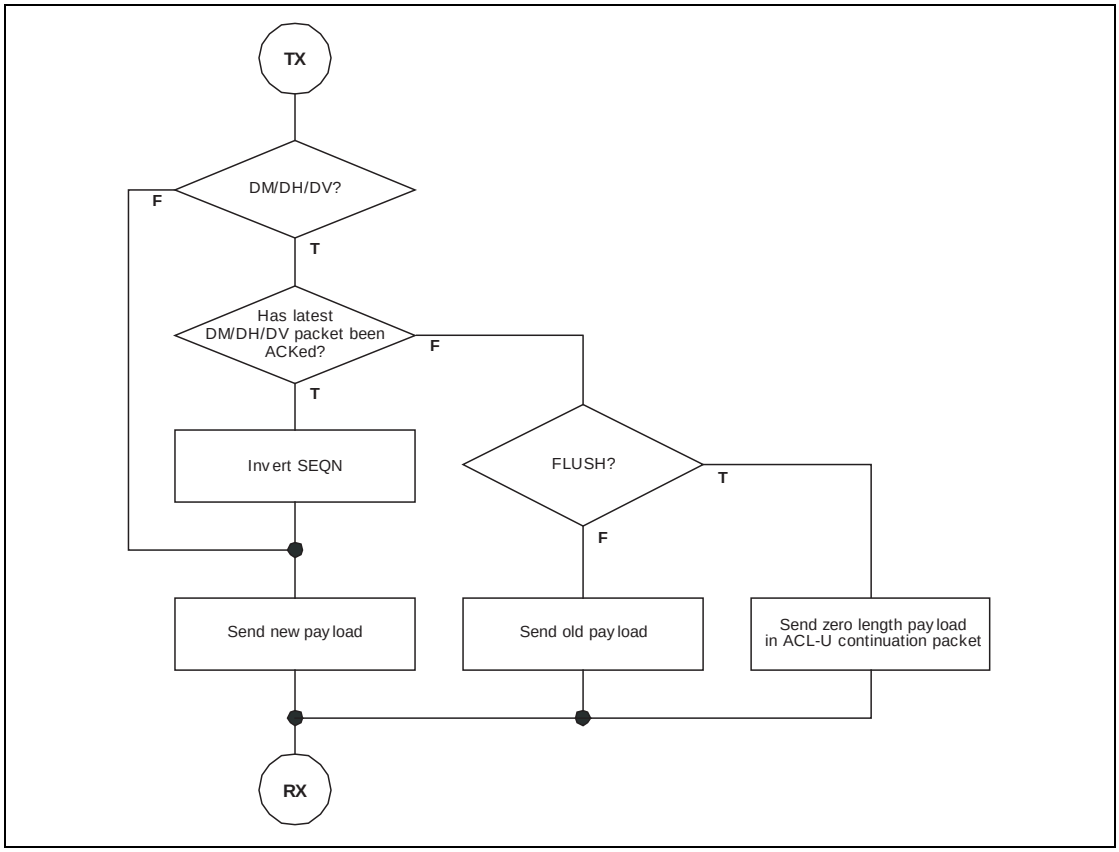

Figure 7.15: Transmit filtering for packets with CRC.

7.6.2.3 eSCO retransmit filtering

In eSCO, the SEQN bit shall be toggled every eSCO window. The value shall be constant for the duration of the eSCO window. The initial value of SEQN shall be zero.

For a given eSCO window the SEQN value shall be constant.

7.6.2.4 FHS retransmit filtering

The SEQN bit in the FHS packet is not meaningful. This bit may be set to any value. Contents of the SEQN bit in the FHS packet shall not be checked.

7.6.2.5 Packets without CRC retransmit filtering

During transmission of packets without a CRC the SEQN bit shall remain the same as it was in the previous packet.

7.6.3 Flushing payloads

In ACL, the ARQ scheme can cause variable delay in the traffic flow since retransmissions are inserted to assure error-free data transfer. For certain communication links, only a limited amount of delay is allowed: retransmissions are allowed up to a certain limit at which the current payload shall be ignored. This data transfer is indicated as **isochronous traffic**. This means that the retransmit process must be overruled in order to continue with the next data payload. Aborting the retransmit scheme is accomplished by *flushing* the old data and forcing the link controller to take the next data instead.

Flushing results in loss of remaining portions of an L2CAP message. Therefore, the packet following the flush shall have a start packet indication of LLID = 10 in the payload header for the next L2CAP message. This informs the destination of the flush. (see Section 6.6 on page 112). Flushing will not necessarily result in a change in the SEQN bit value, see the previous section.

The Flush Timeout defines a maximum period after which all segments of the ACL-U packet are flushed from the Controller buffer. The Flush Timeout shall start when the First segment of the ACL-U packet is stored in the Controller buffer. After the Flush timeout has expired the Link Controller may continue transmissions according to the procedure described in Section 7.6.2.2 on page 128, however the Baseband Resource Manager shall not continue the transmission of the ACL-U packet to the Link Controller. If the Baseband Resource Manager has further segments of the packet queued for transmission to the Link Controller it shall delete the remaining segments of the ACL-U packet from the queue. In case the complete ACL-U packet was not stored in the Controller buffer yet, any Continuation segments, received for the ACL logical transport, shall be flushed, until a First segment is received. When the complete ACL-U packet has been flushed, the Link Manager shall continue transmission of the next ACL-U packet for the ACL logical transport. The default Flush Timeout shall be infinite, i.e. re-transmissions are carried out until physical link loss occurs. This is also referred to as a 'reliable channel'. All devices shall support the default Flush Timeout.

In eSCO, packets shall be automatically flushed at the end of the eSCO window.

7.6.4 Multi-slave considerations

In a piconet with multiple logical transports, the master shall carry out the ARQ protocol independently on each logical transport.

7.6.5 Broadcast packets

Broadcast packets are packets transmitted by the master to all the slaves simultaneously. If multiple hop sequences are being used each transmission may only be received by some of the slaves. In this case the master shall repeat the transmission on each hop sequence. A broadcast packet shall be

indicated by the all-zero LT_ADDR (note; the FHS packet is the only packet which may have an all-zero LT_ADDR but is not a broadcast packet). Broadcast packets shall not be acknowledged (at least not at the LC level).

Since broadcast messages are not acknowledged, each broadcast packet is transmitted at least a fixed number of times. A broadcast packet should be transmitted N_{BC} times before the next broadcast packet of the same broadcast message is transmitted, see Figure 7.16 on page 131. Optionally, a broadcast packet may be transmitted N_{BC} + 1 times. Note: N_{BC}=1 means that each broadcast packet should be sent only once, but optionally may be sent twice. However, time-critical broadcast information may abort the ongoing broadcast train. For instance, unpark messages sent at beacon instances may do this, see Section 8.9.5 on page 171.

If multiple hop sequences are being used then the master may transmit on the different hop sequences in any order, providing that transmission of a new broadcast packet shall not be started until all transmissions of any previous broadcast packet have completed on all hop sequences. The transmission of a single broadcast packet may be interleaved among the hop sequences to minimize the total time to broadcast a packet. The master has the option of transmitting only N_{BC} times on channels common to all hop sequences.

Broadcast packets with a CRC shall have their own sequence number. The SEQN of the first broadcast packet with a CRC shall be set to SEQN = 1 by the master and shall be inverted for each new broadcast packet with CRC thereafter. Broadcast packets without a CRC have no influence on the sequence number. The slave shall accept the SEQN of the first broadcast packet it receives in a connection and shall check for change in SEQN for subsequent broadcast packets. Since there is no acknowledgement of broadcast messages and there is no end packet indication, it is important to receive the start packets correctly. To ensure this, repetitions of the broadcast packets that are L2CAP start packets and LMP packets shall not be filtered out. These packets shall be indicated by LLID=1X in the payload header as explained in section 6.6 on page 112. Only repetitions of the L2CAP continuation packets shall be filtered out.

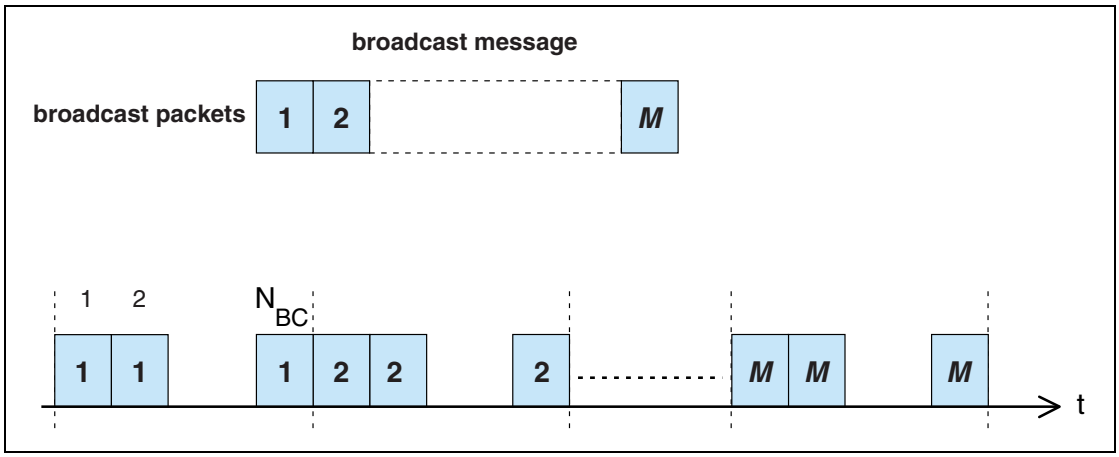

Figure 7.16: Broadcast repetition scheme

8 LINK CONTROLLER OPERATION

This section describes how a piconet is established and how devices can be added to and released from the piconet. Several states of operation of the devices are defined to support these functions. In addition, the operation of several piconets with one or more common members, the scatternet, is discussed.

8.1 OVERVIEW OF STATES

Figure 8.1 on page 133 shows a state diagram illustrating the different states used in the link controller. There are three major states: **STANDBY**, **CONNECTION**, and **PARK**; in addition, there are seven substates, **page**, **page scan**, **inquiry**, **inquiry scan**, **master response**, **slave response**, and **inquiry response**. The substates are interim states that are used to establish connections and enable device discovery. To move from one state or substate to another, either commands from the link manager are used, or internal signals in the link controller are used (such as the trigger signal from the correlator and the timeout signals).

.

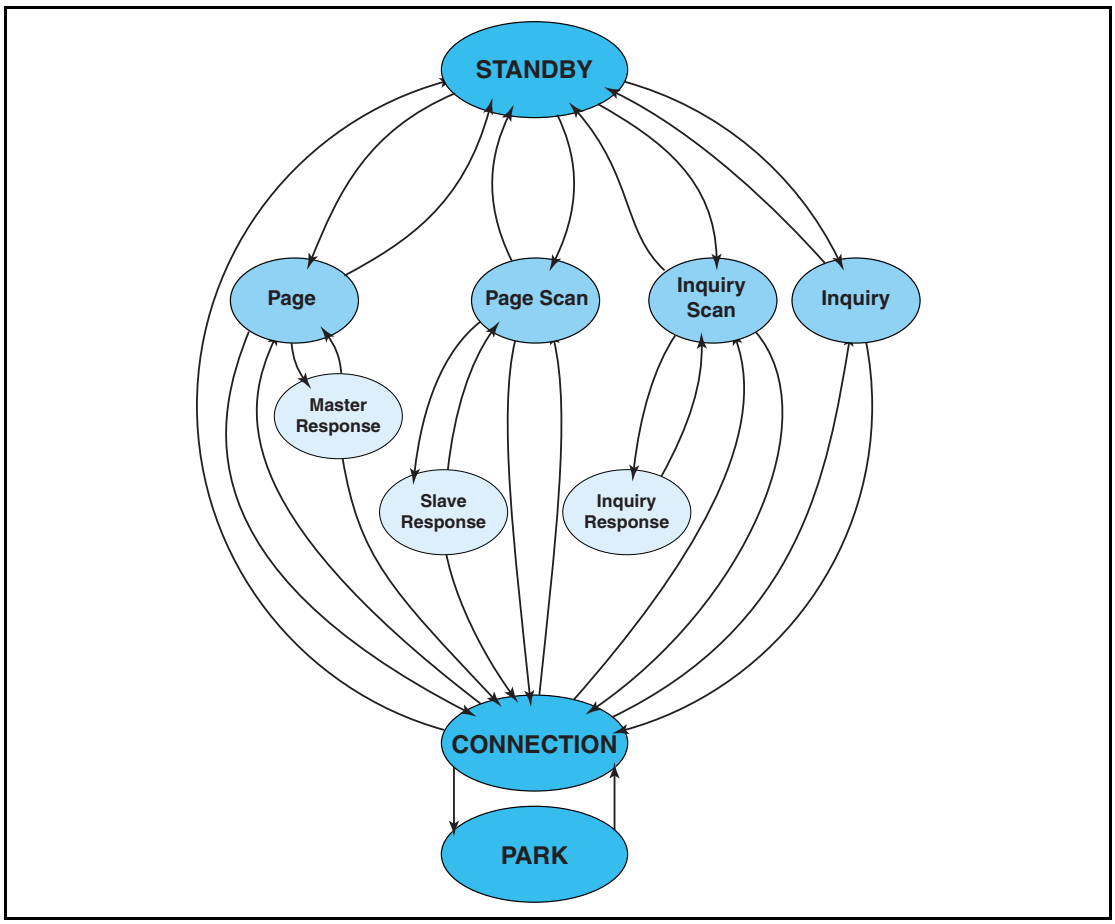

Figure 8.1: State diagram of link controller.

8.2 STANDBY STATE

The **STANDBY** state is the default state in the device. In this state, the device may be in a low-power mode. Only the native clock is running at the accuracy of the LPO (or better).

The controller may leave the **STANDBY** state to scan for page or inquiry messages, or to page or inquiry itself.

8.3 CONNECTION ESTABLISHMENT SUBSTATES

In order to establish new connections the paging procedure is used. Only the Bluetooth device address is required to set up a connection. Knowledge about the clock, obtained from the inquiry procedure (see Section 8.4 on page 143) or from a previous connection with this device, and the page scanning mode of the other device will accelerate the setup procedure. A device that establishes a connection carries out a page procedure and will automatically become the master of the connection.

8.3.1 Page scan substate

In the **page scan** substate, a device may be configured to use either the standard or interlaced scanning procedure. During a standard scan, a device listens for the duration of the scan window $T_{w_page_scan}$ (11.25ms default, see HCI [Part E] Section 7.3.20 on page 467), while the interlaced scan is performed as two back to back scans of $T_{w_page_scan}$. If the scan interval is not at least twice the scan window, then interlaced scan shall not be used. During each scan window, the device shall listen at a single hop frequency, its correlator matched to its device access code (DAC). The scan window shall be long enough to completely scan 16 page frequencies.

When a device enters the **page scan** substate, it shall select the scan frequency according to the page hopping sequence determined by the device's Bluetooth device address, see Section 2.6.4.1 on page 79. The phase in the sequence shall be determined by $CLKN_{16\text{-}12}$ of the device's native clock; that is, every 1.28s a different frequency is selected.

In the case of a standard scan, if the correlator exceeds the trigger threshold during the **page scan**, the device shall enter the **slave response** substate described in Section 8.3.3.1 on page 140. The scanning device may also use interlaced scan. In this case, if the correlator does not exceed the trigger threshold during the first scan it shall scan a second time using the phase in the sequence determined by $[CLKN_{16\text{-}12} + 16]$ mod 32. If on this second scan the correlator exceeds the trigger threshold the device shall enter the **slave response** substate using $[CLKN_{16\text{-}12} + 16]$ mod 32 as the frozen CLKN* in the calculation for $Xprs^{(79)}$, see Section 2.6.4.3 on page 80 for details. If the correlator does not exceed the trigger threshold during a scan in normal mode or

during the second scan in interlaced scan mode it shall return to either the **STANDBY** or **CONNECTION** state.

The **page scan** substate can be entered from the **STANDBY** state or the **CONNECTION** state. In the **STANDBY** state, no connection has been established and the device can use all the capacity to carry out the **page scan**. Before entering the **page scan** substate from the **CONNECTION** state, the device should reserve as much capacity as possible for scanning. If desired, the device may place ACL connections in Hold, Park or Sniff, see Section 8.8 on page 165 and Section 8.9 on page 165. Synchronous connections should not be interrupted by the page scan, although eSCO retransmissions should be paused during the scan. The page scan may be interrupted by the reserved synchronous slots which should have higher priority than the **page scan**. SCO packets should be used requiring the least amount of capacity (**HV3** packets). The scan window shall be increased to minimize the setup delay. If one SCO logical transport is present using **HV3** packets and T_{SCO}=6 slots or one eSCO logical transport is present using **EV3** packets and T_{ESCO}=6 slots, a total scan window $T_{w\ page\ scan}$ of at least 36 slots (22.5ms) is recommended; if two SCO links are present using **HV3** packets and T_{SCO}=6 slots or two eSCO links are present using **EV3** packets and T_{ESCO}=6 slots, a total scan window of at least 54 slots (33.75ms) is recommended.

The scan interval $T_{page\ scan}$ is defined as the interval between the beginnings of two consecutive page scans. A distinction is made between the case where the scan interval is equal to the scan window $T_{w\ page\ scan}$ (continuous scan), the scan interval is maximal 1.28s, or the scan interval is maximal 2.56s. These three cases shall determine the behavior of the paging device; that is, whether the paging device shall use R0, R1 or R2, see also Section 8.3.2 on page 136. Table 8.1 illustrates the relationship between $T_{page\ scan}$ and modes R0, R1 and R2. Although scanning in the R0 mode is continuous, the scanning may be interrupted for example by reserved synchronous slots. The scan interval information is included in the SR field in the FHS packet.

SR mode	$T_{page\ scan}$
R0	≤ 1.28s and = $T_{w\ page\ scan}$
R1	≤ 1.28s
R2	≤ 2.56s
Reserved	-

Table 8.1: Relationship between scan interval, and paging modes R0, R1 and R2.

8.3.2 Page substate

The **page** substate is used by the master (source) to activate and connect to a slave (destination) in the **page scan** substate. The master tries to coincide with the slave's scan activity by repeatedly transmitting the paging message consisting of the slave's device access code (DAC) in different hop channels. Since the Bluetooth clocks of the master and the slave are not synchronized, the master does not know exactly when the slave wakes up and on which hop frequency. Therefore, it transmits a train of identical page scan messages at different hop frequencies and listens in between the transmit intervals until it receives a response from the slave.

The page procedure in the master consists of a number of steps. First, the Host communicates the BD_ADDR of the slave to the Controller. This BD_ADDR shall be used by the master to determine the page hopping sequence, see Section 2.6.4.2 on page 80. The slave's BD_ADDR shall be used to determine the page hopping sequence, see Section 2.6.4.2 on page 80. For the phase in the sequence, the master shall use an estimate of the slave's clock. For example, this estimate can be derived from timing information that was exchanged during the last encounter with this particular device (which could have acted as a master at that time), or from an inquiry procedure. With this estimate CLKE of the slave's Bluetooth clock, the master can predict on which hop channel the slave starts page scanning.

The estimate of the Bluetooth clock in the slave can be completely wrong. Although the master and the slave use the same hopping sequence, they use different phases in the sequence and might never select the same frequency. To compensate for the clock drifts, the master shall send its page message during a short time interval on a number of wake-up frequencies. It shall transmit also on hop frequencies just before and after the current, predicted hop frequency. During each TX slot, the master shall sequentially transmit on two different hop frequencies. In the following RX slot, the receiver shall listen sequentially to two corresponding RX hops for ID packet. The RX hops shall be selected according to the page response hopping sequence. The page response hopping sequence is strictly related to the page hopping sequence: for each page hop there is a corresponding page response hop. The RX/TX timing in the **page** substate is described in Section 2.2.5 on page 60, see also Figure 2.7 on page 65. In the next TX slot, it shall transmit on two hop frequencies different from the former ones. Note: The hop rate is increased to 3200 hops/s.

With the increased hopping rate as described above, the transmitter can cover 16 different hop frequencies in 16 slots or 10 ms. The page hopping sequence is divided over two paging trains **A** and **B** of 16 frequencies. Train **A** includes the 16 hop frequencies surrounding the current, predicted hop frequency *f(k)*, where k is determined by the clock estimate $CLKE_{16\text{-}12}$. The first train consists of hops

f(k-8), f(k-7),...,f(k),...,f(k+7)

When the difference between the Bluetooth clocks of the master and the slave is between -8x1.28 s and +7x1.28 s, one of the frequencies used by the master will be the hop frequency the slave will listen to. Since the master does not know when the slave will enter the **page scan** substate, the master has to repeat this train **A** N_{page} times or until a response is obtained, whichever is shorter. If the slave scan interval corresponds to R1, the repetition number is at least 128; if the slave scan interval corresponds to R2 or if the master has not previously read the slave's SR mode, the repetition number is at least 256. If the master has not previously read the slave's SR mode it shall use Npage >= 256. Note that $CLKE_{16-12}$ changes every 1.28 s; therefore, every 1.28 s, the trains will include different frequencies of the page hopping set.

When the difference between the Bluetooth clocks of the master and the slave is less than -8x1.28 s or larger than +7x1.28 s, the remaining 16 hops are used to form the new 10 ms train **B.** The second train consists of hops

f(k-16), f(k-15),...,f(k-9),f(k+8)...,f(k+15)

Train **B** shall be repeated for N_{page} times. If no response is obtained, train **A** shall be tried again N_{page} times. Alternate use of train A and train B shall be continued until a response is received or the timeout *pageTO* is exceeded. If a response is returned by the slave, the master device enters the **master response** substate.

The **page** substate may be entered from the **STANDBY** state or the **CONNECTION** state. In the **STANDBY** state, no connection has been established and the device can use all the capacity to carry out the page. Before entering the **page** substate from the **CONNECTION** state, the device should free as much capacity as possible for scanning. To ensure this, it is recommended that the ACL connections are put on hold or park. However, the synchronous connections shall not be disturbed by the page. This means that the page will be interrupted by the reserved SCO and eSCO slots which have higher priority than the page. In order to obtain as much capacity for paging, it is recommended to use the SCO packets which use the least amount of capacity (**HV3** packets). If SCO or eSCO links are present, the repetition number N_{page} of a single train shall be increased, see Table 8.2. Here it has been assumed that the **HV3** packet are used with an interval T_{SCO}=6 slots or **EV3** packets are used with an interval of T_{ESCO}=6 slots, which would correspond to a 64 kb/s synchronous link.

.

SR mode	no synchronous link	one synchronous link (HV3)	two synchronous links (HV3)
R0	$N_{page} \geq 1$	$N_{page} \geq 2$	$N_{page} \geq 3$
R1	$N_{page} \geq 128$	$N_{page} \geq 256$	$N_{page} \geq 384$
R2	$N_{page} \geq 256$	$N_{page} \geq 512$	$N_{page} \geq 768$

Table 8.2: Relationship between train repetition, and paging modes R0, R1 and R2 when synchronous links are present.

The construction of the page train shall be independent of the presence of synchronous links; that is, synchronous packets are sent on the reserved slots but shall not affect the hop frequencies used in the unreserved slots, see Figure 8.2 on page 138.

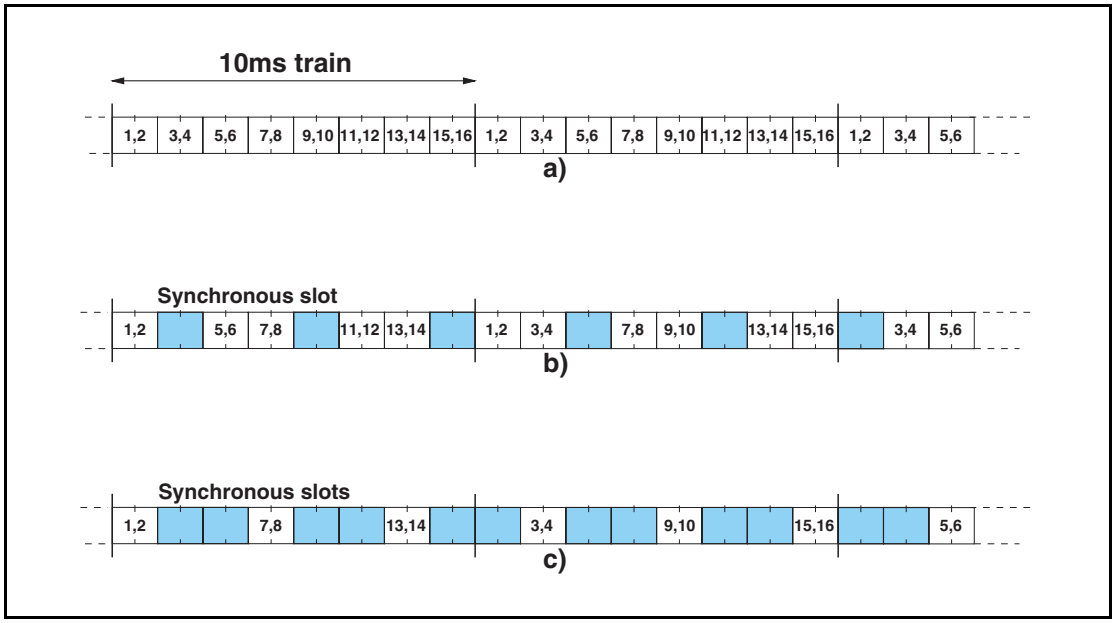

Figure 8.2: Conventional page (a), page while one synchronous link present (b), page while two synchronous links present (c).

8.3.3 Page response substates

When a page message is successfully received by the slave, there is a coarse FH synchronization between the master and the slave. Both the master and the slave enter a response substate to exchange vital information to continue the connection setup. It is important for the piconet connection that both devices shall use the same channel access code, use the same channel hopping sequence, and their clocks are synchronized. These parameters shall be derived from the master device. The device that initializes the connection (starts paging) is defined as the master device (which is thus only valid during the time the piconet exists). The channel access code and channel hopping sequence shall be derived from the Bluetooth device address (BD_ADDR) of the master. The timing shall be determined by the master clock. An offset shall be added to the slave's native clock to temporarily synchronize the slave clock to the master clock. At start-up, the master parameters are transmitted from the master to the slave. The messaging between the master and the slave at start-up is specified in this section.

The initial messaging between master and slave is shown in Table 8.3 on page 139 and in Figure 8.3 on page 140 and Figure 8.4 on page 140. In those two figures frequencies f (k), f(k+1), etc. are the frequencies of the page hopping sequence determined by the slave's BD_ADDR. The frequencies f'(k), f'(k+1), etc. are the corresponding page_response frequencies (slave-to-master). The frequencies g(m) belong to the basic channel hopping sequence.

Step	Message	Packet Type	Direction	Hopping Sequence	Access Code and Clock
1	Page	ID	Master to slave	Page	Slave
2	First slave page response	ID	Slave to master	Page response	Slave
3	Master page response	FHS	Master to slave	Page	Slave
4	Second slave page response	ID	Slave to master	Page response	Slave
5	1st packet master	POLL	Master to slave	Channel	Master
6	1st packet slave	Any type	Slave to master	Channel	Master

Table 8.3: Initial messaging during start-up.

In step 1 (see Table 8.3 on page 139), the master device is in **page** substate and the slave device in the **page scan** substate. Assume in this step that the page message sent by the master reaches the slave. On receiving the page message, the slave enters the **slave response** in step 2. The master waits for a reply from the slave and when this arrives in step 2, it will enter the **master response** in step 3. Note that during the initial message exchange, all parame-

ters are derived from the slave's device address, and that only the page hopping and page response hopping sequences are used (are also derived from the slave's device address). Note that when the master and slave enter the response states, their clock input to the page and page response hop selection is frozen as is described in Section 2.6.4.3 on page 80.

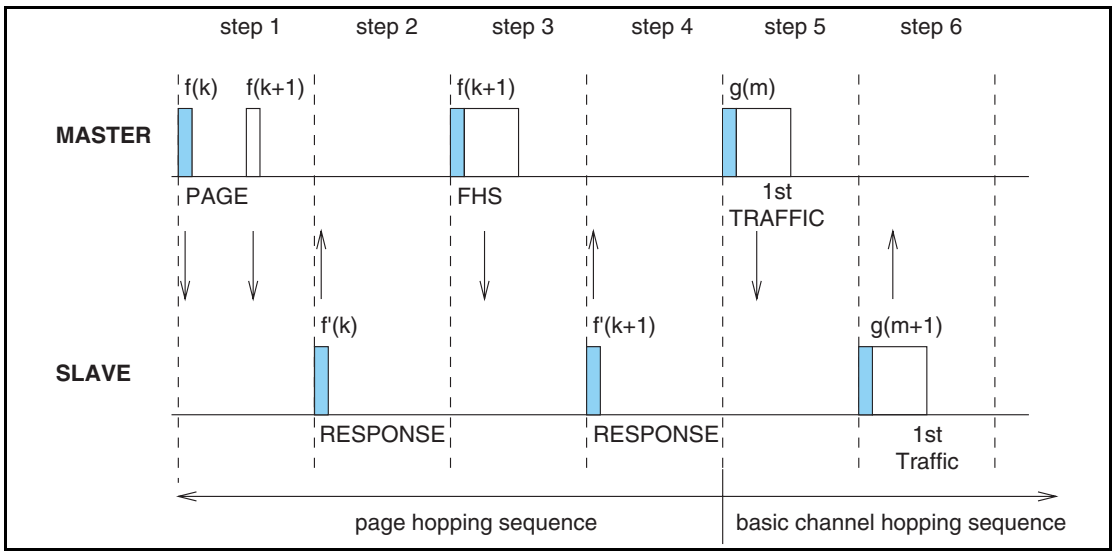

Figure 8.3: Messaging at initial connection when slave responds to first page message.

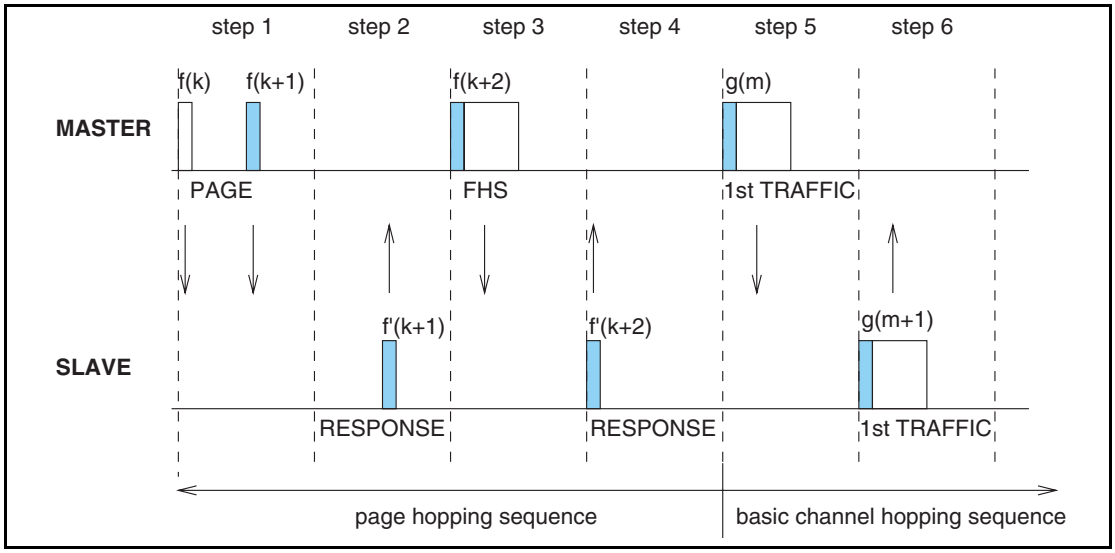

Figure 8.4: Messaging at initial connection when slave responds to second page message.

8.3.3.1 Slave response substate

After having received the page message in step 1, the slave device shall transmit a slave page response message (the slave's device access code) in step 2. This response message shall be the slave's device access code. The slave shall transmit this response 625 µs after the beginning of the received page message and at the response hop frequency that corresponds to the hop fre-

quency in which the page message was received. The slave transmission is therefore time aligned to the master transmission. During initial messaging, the slave shall still use the page response hopping sequence to return information to the master. The clock input $CLKN_{16\text{-}12}$ shall be frozen at the value it had at the time the page message was received.

After having sent the response message, the slave's receiver shall be activated 312.5 µs after the start of the response message and shall await the arrival of an **FHS** packet. Note that an **FHS** packet can arrive 312.5 µs after the arrival of the page message as shown in Figure 8.4 on page 140, and not after 625 µs as is usually the case in the piconet physical channel RX/TX timing. More details about the timing can be found in Section 2.4.4 on page 66.

If the setup fails before the **CONNECTION** state has been reached, the following procedure shall be carried out. The slave shall listen as long as no **FHS** packet is received until *pagerespTO* is exceeded. Every 1.25 ms, however, it shall select the next master-to-slave hop frequency according to the page hop sequence. If nothing is received after *pagerespTO*, the slave shall return back to the **page scan** substate for one scan period. Length of the scan period depends on the synchronous reserved slots present. If no page message is received during this additional scan period, the slave shall resume scanning at its regular scan interval and return to the state it was in prior to the first page scan state.

If an **FHS** packet is received by the slave in the **slave response** substate, the slave shall return a slave page response message in step 4 to acknowledge reception of the **FHS** packet. This response shall use the page response hopping sequence. The transmission of the slave page response packet is based on the reception of the **FHS** packet. Then the slave shall change to the master's channel access code and clock as received from the **FHS** packet. Only the 26 MSBs of the master clock are transferred: the timing shall be such that CLK_1 and CLK_0 are both zero at the time the **FHS** packet was received as the master transmits in even slots only. The offset between the master's clock and the slave's clock shall be determined from the master's clock in the **FHS** packet and reported to the slave's Baseband Resource Manager.

Finally, the slave enters the **CONNECTION** state in step 5. From then on, the slave shall use the master's clock and the master's BD_ADDR to determine the basic channel hopping sequence and the channel access code. The slave shall use the LT_ADDR in the **FHS** payload as the primary LT_ADDR in the **CONNECTION** state. The connection mode shall start with a POLL packet transmitted by the master. The slave may respond with any type of packet. If the POLL packet is not received by the slave, or the response packet is not received by the master, within *newconnectionTO* number of slots after FHS packet acknowledgement, the master and the slave shall return to **page** and **page scan** substates, respectively. See Section 8.5 on page 148

8.3.3.2 Master response substate

When the master has received a slave page response message in step 2, it shall enter the **master response** routine. It shall freeze the current clock input to the page hop selection scheme. The master shall then transmit an **FHS** packet in step 3 containing the master's real-time Bluetooth clock, the master's BD_ADDR, the BCH parity bits, and the class of device. The **FHS** packet contains all information to construct the channel access code without requiring a mathematical derivation from the master's Bluetooth device address. The LT_ADDR field in the packet header of FHS packets in the master response substate shall be set to all-zeros. The **FHS** packet shall be transmitted at the beginning of the master-to-slave slot following the slot in which the slave responded. The FHS packet shall carry the all-zero LT_ADDR. The TX timing of the **FHS** is not based on the reception of the response packet from the slave. The **FHS** packet may therefore be sent 312.5 µs after the reception of the response packet like shown in Figure 8.4 on page 140 and not 625 µs after the received packet as is usual in the piconet physical channel RX/TX timing, see also Section 2.4.4 on page 66.

After the master has sent its **FHS** packet, it shall wait for a second slave page response message in step 4 acknowledging the reception of the **FHS** packet. This response shall be the slave's device access code. If no response is received, the master shall retransmit the **FHS** packet with an updated clock and still using the slave's parameters. It shall retransmit the FHS packet with the clock updated each time until a second slave page response message is received, or the timeout of *pagerespTO* is exceeded. In the latter case, the master shall return to the **page** substate and send an error message to the Baseband Resource Manager. During the retransmissions of the **FHS** packet, the master shall use the page hopping sequence.

If the slave's response is received, the master shall change to using the master parameters, so it shall use the channel access code and the master clock. The lower clock bits CLK_0 and CLK_1 shall be reset to zero at the start of the **FHS** packet transmission and are not included in the **FHS** packet. Finally, the master enters the **CONNECTION** state in step 5. The master BD_ADDR shall be used to change to a new hopping sequence, the *basic channel hopping sequence*. The basic channel hopping sequence uses all 79 hop channels in a pseudo-random fashion, see also Section 2.6.4.7 on page 82. The master shall now send its first traffic packet in a hop determined with the new (master) parameters. This first packet shall be a POLL packet. See Section 8.5 on page 148. This packet shall be sent within *newconnectionTO* number of slots after reception of the FHS packet acknowledgement. The slave may respond with any type of packet. If the POLL packet is not received by the slave or the POLL packet response is not received by the master within *newconnectionTO* number of slots, the master and the slave shall return to **page** and **page scan** substates, respectively.

8.4 DEVICE DISCOVERY SUBSTATES

In order to discover other devices a device shall enter **inquiry** substate. In this substate, it shall repeatedly transmit the inquiry message (ID packet, see Section 6.5.1.1 on page 106) at different hop frequencies. The **inquiry** hop sequence is derived from the LAP of the GIAC. Thus, even when DIACs are used, the applied hopping sequence is generated from the GIAC LAP. A device that allows itself to be discovered, shall regularly enter the **inquiry scan** substate to respond to inquiry messages. The following sections describe the message exchange and contention resolution during inquiry response. The inquiry response is optional: a device is not forced to respond to an inquiry message.

During the **inquiry** substate, the discovering device collects the Bluetooth device addresses and clocks of all devices that respond to the inquiry message. It can then, if desired, make a connection to any one of them by means of the previously described page procedure.

The inquiry message broadcast by the source does not contain any information about the source. However, it may indicate which class of devices should respond. There is one general inquiry access code (GIAC) to inquire for any device, and a number of dedicated inquiry access codes (DIAC) that only inquire for a certain type of device. The inquiry access codes are derived from reserved Bluetooth device addresses and are further described in Section 6.3.1 on page 98.

8.4.1 Inquiry scan substate

The **inquiry scan** substate is very similar to the **page scan** substate. However, instead of scanning for the device's device access code, the receiver shall scan for the inquiry access code long enough to completely scan for 16 inquiry frequencies. Two types of scans are defined: standard and interlaced. In the case of a standard scan the length of this scan period is denoted $T_{w_inquiry_scan}$ (11.25ms default, see HCI [Part E] Section 7.3.22 on page 469). The standard scan is performed at a single hop frequency as defined by Xir_{4-0} (see Section 2.6.4.6 on page 82). The interlaced scan is performed as two back to back scans of $T_{w_inquiry_scan}$ where the first scan is on the normal hop frequency and the second scan is defined by $[Xir_{4-0} + 16] \bmod 32$. If the scan interval is not at least twice the scan window then interlaced scan shall not be used. The inquiry procedure uses 32 dedicated inquiry hop frequencies according to the inquiry hopping sequence. These frequencies are determined by the general inquiry address. The phase is determined by the native clock of the device carrying out the **inquiry scan**; the phase changes every 1.28s.

Instead of, or in addition to, the general inquiry access code, the device may scan for one or more dedicated inquiry access codes. However, the scanning shall follow the inquiry scan hopping sequence determined by the general inquiry address. If an inquiry message is received during an inquiry wake-up period, the device shall enter the **inquiry response** substate.

The **inquiry scan** substate can be entered from the **STANDBY** state or the **CONNECTION** state. In the **STANDBY** state, no connection has been established and the device can use all the capacity to carry out the **inquiry scan**. Before entering the **inquiry scan** substate from the **CONNECTION** state, the device should reserve as much capacity as possible for scanning. If desired, the device may place ACL logical transports in Sniff, Hold, or Park. Synchronous logical transports are preferably not interrupted by the **inquiry scan**, although eSCO retransmissions should be paused during the scan. In this case, the **inquiry scan** may be interrupted by the reserved synchronous slots. SCO packets should be used requiring the least amount of capacity (**HV3** packets). The scan window, $T_{w\ inquiry\ scan}$, shall be increased to increase the probability to respond to an inquiry message. If one SCO logical transport is present using HV3 packets and T_{SCO}=6 slots or one eSCO logical transport is present using EV3 packets and T_{ESCO}=6 slots, a total scan window of at least 36 slots (22.5ms) is recommended; if two SCO links are present using HV3 packets and T_{SCO}=6 slots or two eSCO links are present using EV3 packets and T_{ESCO}=6 slots, a total scan window of at least 54 slots (33.75ms) is recommended.

The scan interval $T_{inquiry\ scan}$ is defined as the interval between two consecutive inquiry scans. The **inquiry scan** interval shall be less than or equal to 2.56 s.

8.4.2 Inquiry substate

The **inquiry** substate is used to discover new devices. This substate is very similar to the **page** substate; the TX/RX timing shall be the same as in paging, see Section 2.4.4 on page 66 and Figure 2.7 on page 65. The TX and RX frequencies shall follow the inquiry hopping sequence and the inquiry response hopping sequence, and are determined by the general inquiry access code and the native clock of the discovering device. In between inquiry transmissions, the receiver shall scan for inquiry response messages. When a response is received, the entire packet (an **FHS** packet) is read, after which the device shall continue with inquiry transmissions. The device in an **inquiry** substate shall not acknowledge the inquiry response messages. If enabled by the Host (see HCI [Part E] Section 7.3.54 on page 506), the RSSI value of the inquiry response message shall be measured. It shall keep probing at different hop channels and in between listening for response packets. As in the **page** substate, two 10 ms trains **A** and **B** are defined, splitting the 32 frequencies of the inquiry hopping sequence into two 16-hop parts. A single train shall be repeated for at least $N_{inquiry}$=256 times before a new train is used. In order to collect all responses in an error-free environment, at least three train switches must have taken place. As a result, the **inquiry** substate may have to last for 10.24 s unless the inquirer collects enough responses and aborts the **inquiry** substate earlier. If desired, the inquirer may also prolong the **inquiry** substate to increase the probability of receiving all responses in an error-prone environment. If an inquiry procedure is automatically initiated periodically (say a 10 s period every minute), then the interval between two inquiry instances shall be determined randomly. This is done to avoid two devices synchronizing their inquiry procedures.

The **inquiry** substate is continued until stopped by the Baseband Resource Manager (when it decides that it has sufficient number of responses), when a timeout has been reached (*inquiryTO*), or by a command from the host to cancel the inquiry procedure.

The **inquiry** substate can be entered from the **STANDBY** state or the **CONNECTION** state. In the **STANDBY** state, no connection has been established and the device can use all the capacity to carry out the inquiry. Before entering the **inquiry** substate from the **CONNECTION** state, the device should free as much capacity as possible for scanning. To ensure this, it is recommended that the ACL logical transports are placed in Sniff, Hold, or Park. However, the reserved slots of synchronous logical transports shall not be disturbed by the inquiry. This means that the inquiry will be interrupted by the reserved SCO and eSCO slots which have higher priority than the inquiry. In order to obtain as much capacity as possible for inquiry, it is recommended to use the SCO packets which use the least amount of capacity (**HV3** packets). If SCO or eSCO links are present, the repetition number $N_{inquiry}$ shall be increased, see Table 8.4 on page 146.
Here it has been assumed that **HV3** packets are used with an interval T_{SCO}=6

slots or **EV3** packets are used with an interval of T_{ESCO}=6 slots, which would correspond to a 64 kb/s synchronous link.

	No synchronous links	**One synchronous link (HV3)**	**Two synchronous links (HV3)**
$N_{inquiry}$	≥ 256	≥ 512	≥ 768

Table 8.4: Increase of train repetition when synchronous links are present.

8.4.3 Inquiry response substate

The slave response substate for inquiries differs completely from the slave response substate applied for pages. When the inquiry message is received in the **inquiry scan** substate, the recipient shall return an inquiry response (FHS) packet containing the recipient's device address (BD_ADDR) and other parameters.

The following protocol in the slave's **inquiry response** shall be used. On the first inquiry message received in this substate the slave shall enter the **inquiry response** substate and shall return an **FHS** response packet to the master 625us after the inquiry message was received. A contention problem may arise when several devices are in close proximity to the inquiring device and all respond to an inquiry message at the same time. However, because every device has a free running clock it is highly unlikely that they all use the same phase of the inquiry hopping sequence. In order to avoid repeated collisions between devices that wake up in the same inquiry hop channel simultaneously, a device shall back-off for a random period of time. Thus, if the device receives an inquiry message and returns an FHS packet, it shall generate a random number, RAND, between 0 and MAX_RAND. For scanning intervals ≥ 1.28s MAX_RAND shall be 1023, however, for scanning intervals < 1.28s MAX_RAND may be as small as 127. A profile that uses a special DIAC may choose to use a smaller MAX_RAND than 1023 even when the scanning interval is ≥ 1.28s. The slave shall return to the **CONNECTION** or **STANDBY** state for the duration of at least RAND time slots. Before returning to the **CONNECTION** and **STANDY** state, the device may go through the **page scan** substate. After at least RAND slots, the device shall add an offset of 1 to the phase in the inquiry hop sequence (the phase has a 1.28 s resolution) and return to the **inquiry scan** substate again. If the slave is triggered again, it shall repeats the procedure using a new RAND. The offset to the clock accumulates each time an **FHS** packet is returned. During a probing window, a slave may respond multiple times, but on different frequencies and at different times. Reserved synchronous slots should have priority over response packets; that is, if a response packet overlaps with a reserved synchronous slot, it shall not be sent but the next inquiry message is awaited.

The messaging during the inquiry routines is summarized in Table 8.5 on page 147. In step 1, the master transmits an inquiry message using the inquiry access code and its own clock. The slave responds with the **FHS** packet containing the slave's Bluetooth device address, native clock and other slave information. This **FHS** packet is returned at times that tend to be random. The **FHS** packet is not acknowledged in the inquiry routine, but it is retransmitted at other times and frequencies as long as the master is probing with inquiry messages.

Step	Message	Packet Type	Direction	Hopping Sequence	Access Code and Clock
1	Inquiry	ID	master to slave	inquiry	inquiry
2	Inquiry response	FHS	slave to master	inquiry response	inquiry

Table 8.5: Messaging during inquiry routines.

8.5 CONNECTION STATE

In the **CONNECTION** state, the connection has been established and packets can be sent back and forth. In both devices, the channel (master) access code, the master's Bluetooth clock, and the AFH_channel_map are used. **CONNECTION** state uses the *basic* or *adapted channel hopping sequence*.

The **CONNECTION** state starts with a POLL packet sent by the master to verify the switch to the master's timing and channel frequency hopping. The slave may respond with any type of packet. If the slave does not receive the POLL packet or the master does not receive the response packet for *newconnectionTO* number of slots, both devices shall return to **page**/**page scan** substates.

The first information packets in the **CONNECTION** state contain control messages that characterize the link and give more details regarding the devices. These messages are exchanged between the link managers of the devices. For example, they may define the SCO logical transport and the sniff parameters. Then the transfer of user information can start by alternately transmitting and receiving packets.

The **CONNECTION** state is left through a **detach** or **reset** command. The **detach** command is used if the link has been disconnected in the normal way; all configuration data in the link controller shall remain valid. The **reset** command is a soft reset of the link controller. The functionality of the soft reset is described in [Part E] Section 7.3.2 on page 442.

In the **CONNECTION** state, if a device is not going to be nominally present on the channel at all times it may describe its unavailability by using sniff mode or hold mode (see Figure 8.5 on page 148).

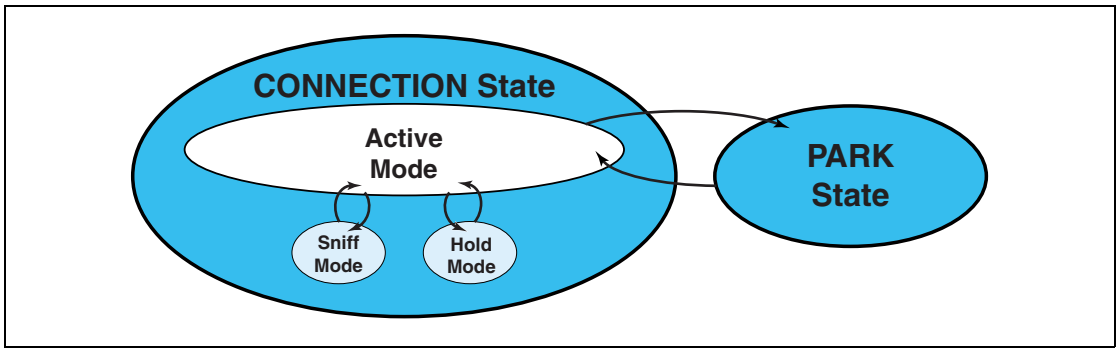

Figure 8.5: Connection state.

8.6 ACTIVE MODE

In the active mode, both master and slave actively participate on the channel. Up to seven slaves may be in the active mode at any given time. The master schedules the transmission based on traffic demands to and from the different slaves. In addition, it supports regular transmissions to keep slaves synchronized to the channel. Slaves in the active mode listen in the master-to-slave slots for packets. These devices are known as *active slaves*. If an active slave is not addressed, it may sleep until the next new master transmission. Slaves can derive the number of slots the master has reserved for transmission from TYPE field in the packet header; during this time, the non-addressed slaves do not have to listen on the master-to-slave slots. When a device is participating in multiple piconets it should listen in the master-to-slave slot for the current piconet. It is recommended that a device not be away from each piconet in which it is participating for more than T_{poll} slots. A periodic master transmission is required to keep the slaves synchronized to the channel. Since the slaves only need the channel access code to synchronize, any packet type can be used for this purpose.

Only the slave that is addressed by one of its LT_ADDRs (primary or secondary) may return a packet in the next slave-to-master slot. If no valid packet header is received, the slave may only respond in its reserved SCO or eSCO slave-to-master slot. In the case of a broadcast message, no slave shall return a packet (an exception is the access window for access requests in the **PARK** state, see Section 8.9 on page 165).

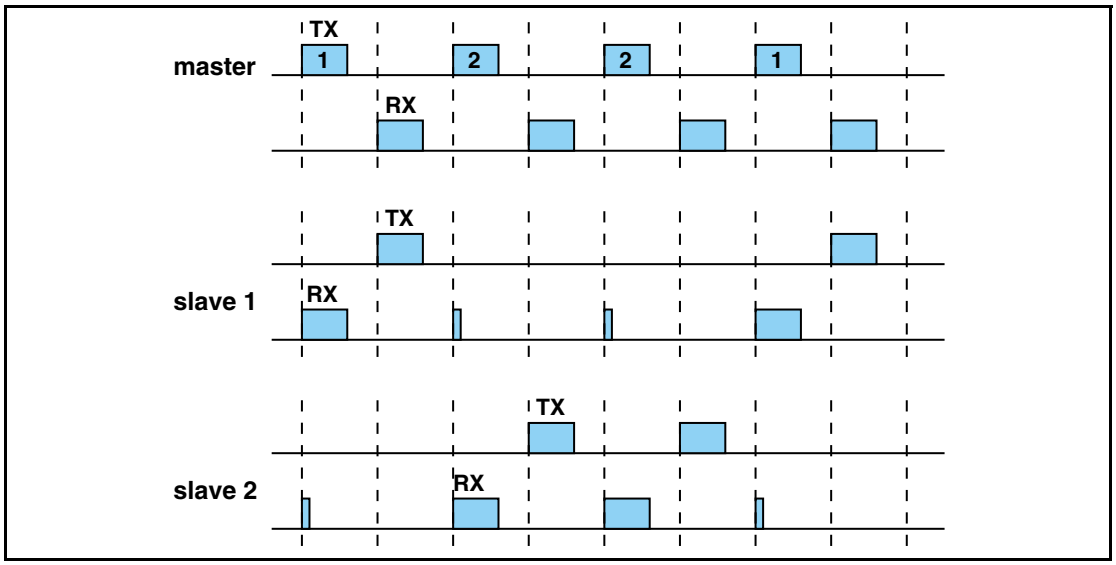

Figure 8.6: RX/TX timing in multi-slave configuration

8.6.1 Polling in the active mode

The master always has full control over the piconet. Due to the TDD scheme, slaves can only communicate with the master and not other slaves. In order to avoid collisions on the ACL logical transport, a slave is only allowed to transmit in the slave-to-master slot when addressed by the LT_ADDR in the packet header in the preceding master-to-slave slot. If the LT_ADDR in the preceding slot does not match, or a valid packet header was not received, the slave shall not transmit.

The master normally attempts to poll a slave's ACL logical transport no less often than once every T_{poll} slots. T_{poll} is set by the Link Manager (see [Part C] Section 4.1.8 on page 220).

The slave's ACL logical transport may be polled with any packet type except for FHS and ID. For example, polling during SCO may use HV packets, since the slave may respond to an HV packet with a DM1 packet (see Section 8.6.2 on page 150).

8.6.2 SCO

The SCO logical transport shall be established by the master sending an SCO setup message via the LM protocol. This message contains timing parameters including the SCO interval T_{SCO} and the offset D_{SCO} to specify the reserved slots.

In order to prevent clock wrap-around problems, an initialization flag in the LMP setup message indicates whether initialization procedure 1 or 2 is being used. The slave shall apply the initialization method as indicated by the initialization flag. The master shall use initialization 1 when the MSB of the current master clock (CLK_{27}) is 0; it shall use initialization 2 when the MSB of the current master clock (CLK_{27}) is 1. The master-to-slave SCO slots reserved by the master and the slave shall be initialized on the slots for which the clock satisfies the applicable equation:

$$CLK_{27-1} \bmod T_{SCO} = D_{SCO} \qquad \text{for initialization 1}$$

$$(\overline{CLK_{27}}, CLK_{26-1}) \bmod T_{SCO} = D_{SCO} \qquad \text{for initialization 2}$$

The slave-to-master SCO slots shall directly follow the reserved master-to-slave SCO slots. After initialization, the clock value CLK(k+1) for the next master-to-slave SCO slot shall be derived by adding the fixed interval T_{SCO} to the clock value of the current master-to-slave SCO slot:

$$CLK(k+1) = CLK(k) + T_{SCO}$$

The master will send SCO packets to the slave at regular intervals (the SCO interval T_{SCO} counted in slots) in the reserved master-to-slave slots. An HV1

packet can carry 1.25ms of speech at a 64 kb/s rate. An HV1 packet shall therefore be sent every two time slots (T_{SCO}=2). An HV2 packet can carry 2.5ms of speech at a 64 kb/s rate. An HV2 packet shall therefore be sent every four time slots (T_{SCO}=4). An HV3 packet can carries 3.75ms of speech at a 64 kb/s rate. An HV3 packet shall therefore be sent every six time slots (T_{SCO}=6).

The slave is allowed to transmit in the slot reserved for its SCO logical transport unless the (valid) LT_ADDR in the preceding slot indicates a different slave. If no valid LT_ADDR can be derived in the preceding slot, the slave may still transmit in the reserved SCO slot.

Since the DM1 packet is recognized on the SCO logical transport, it may be sent during the SCO reserved slots if a valid packet header with the primary LT_ADDR is received in the preceeding slot. DM1 packets sent during SCO reserved slots shall only be used to send ACL-C data.

The slave shall not transmit anything other than an HV packet in a reserved SCO slot unless it decodes its own slave address in the packet header of the packet in the preceding master-to-slave transmission slot.

8.6.3 eSCO

The eSCO logical transport is established by the master sending an eSCO setup message via the LM protocol. This message contains timing parameters including the eSCO interval T_{ESCO} and the offset D_{ESCO} to specify the reserved slots.

To enter eSCO, the master or slave shall send an eSCO setup command via the LM protocol. This message shall contain the eSCO interval T_{ESCO} and an offset D_{ESCO}. In order to prevent clock wrap-around problems, an initialization flag in the LMP setup message indicates whether initialization procedure 1 or 2 shall be used. The slave shall apply the initialization method as indicated by the initialization flag. The master shall use initialization 1 when the MSB of the current master clock (CLK_{27}) is 0; it shall use initialization 2 when the MSB of the current master clock (CLK_{27}) is 1. The master-to-slave eSCO slots reserved by the master and the slave shall be initialized on the slots for which the clock satisfies the applicable equation:

$$CLK_{27-1} \bmod T_{ESCO} = D_{ESCO} \qquad \text{for initialization 1}$$

$$(\overline{CLK_{27}}, CLK_{26-1}) \bmod T_{ESCO} = D_{ESCO} \qquad \text{for initialization 2}$$

The slave-to-master eSCO slots shall directly follow the reserved master-to-slave eSCO slots. After initialization, the clock value CLK(k+1) for the next master-to-slave eSCO slot shall be found by adding the fixed interval T_{ESCO} to the clock value of the current master-to-slave eSCO slot:

$$CLK(k+1) = CLK(k) + T_{ESCO}$$

When an eSCO logical transport is established, the master shall assign an additional LT_ADDR to the slave. This provides the eSCO logical transport with an ARQ scheme that is separate from that of the ACL logical transport. All traffic on a particular eSCO logical transport, and only that eSCO traffic, is carried on the eSCO LT_ADDR. The eSCO ARQ scheme uses the ARQN bit in the packet header, and operates similarly to the ARQ scheme on ACL links.

There are two different polling rules in eSCO. In the eSCO reserved slots, the polling rule is the same as to the SCO reserved slots. The master may send a packet in the master slot. The slave may transmit on the eSCO LT_ADDR in the following slot either if it received a packet on the eSCO LT_ADDR in the previous slot, or if it did not receive a valid packet header in the previous slot. When the master-to-slave packet type is a three-slot packet, the slave's transmit slot is the fourth slot of the eSCO reserved slots. A master shall transmit in an eSCO retransmission window on a given eSCO LT_ADDR only if it addressed that eSCO LT_ADDR in the immediately preceeding eSCO reserved slots. A slave may transmit on an eSCO LT_ADDR in the eSCO reserved slots only if the slave did not received a valid packet header with a different LT_ADDR in the eSCO reserved slots. Inside retransmission windows, the same polling rule as for ACL traffic is used: the slave shall transmit on the eSCO channel only if it received a valid packet header and correct LT_ADDR on the eSCO channel in the previous master-to-slave transmission slot. The master may transmit on any non-eSCO LT_ADDR in any master-to-slave transmission slot inside the eSCO retransmission window. The master shall only transmit on an eSCO LT_ADDR in the retransmission window if there are enough slots left in the for both the master and slave packets to complete in the retransmission window. The master may refrain from transmitting in any slot during the eSCO retransmission window. When there is no data to transmit from master to slave, either due to the traffic being unidirectional or due to the master-to-slave packet having been ACK'ed, the master shall use the POLL packet. When the master-to-slave packet has been ACK'ed, and the slave-to-master packet has been correctly received, the master shall not address the slave on the eSCO LT_ADDR until the next eSCO reserved slot, with the exception that the master may transmit a NULL packet with ARQN=ACK on the eSCO LT_ADDR. When there is no data to transmit from slave to master, either due to the traffic being unidirectional or due to the slave-to-master packet having been ACK'ed, the slave shall use NULL packets. eSCO traffic should be given priority over ACL traffic in the retransmission window.

Figure 8.7 on page 153 shows the eSCO window when single slot packets are used.

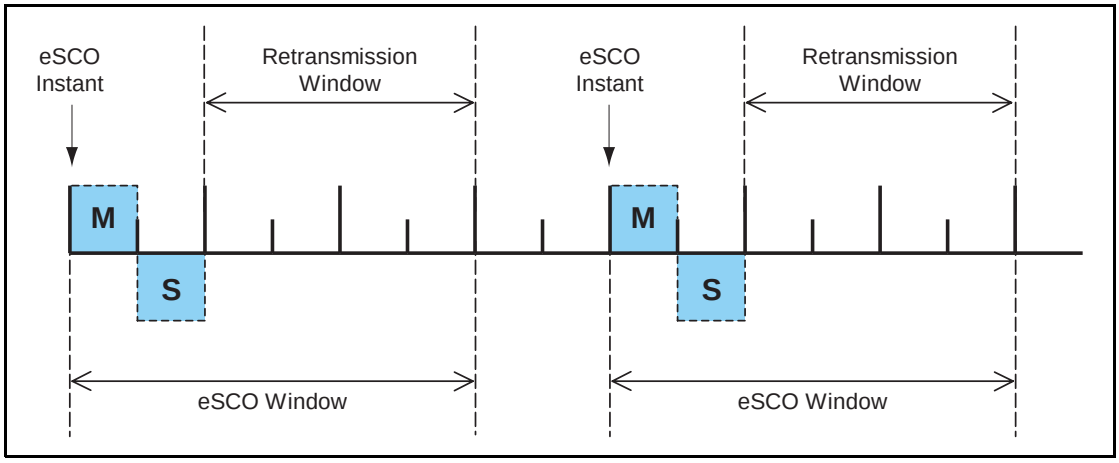

Figure 8.7: eSCO Window Details for Single-Slot Packets

When multi-slot packets are used in either direction of the eSCO logical transport, the first transmission continues into the following slots. The retransmission window in this case starts the slot after the end of the slave-to-master packet, i.e. two, four or six slots immediately following the eSCO instant are reserved and should not be used for other traffic. Figure 8.8 on page 153 shows the eSCO window when multi-slot packets are used in one direction and single-slot packets are used in the other direction.

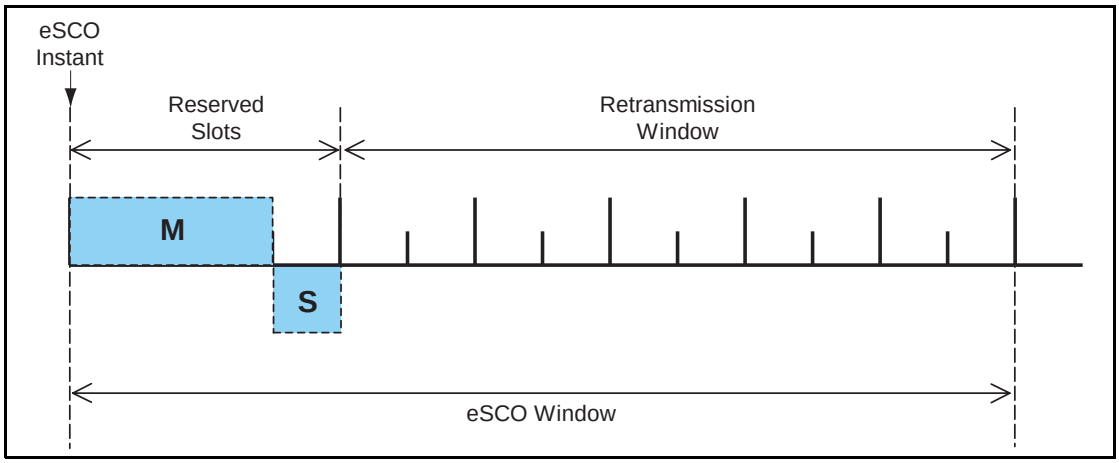

Figure 8.8: eSCO Window Details for Asymmetric Traffic

eSCO windows may overlap on the master, but shall not overlap on an individual slave.

In the reserved slots both master and slave shall only listen and transmit at their allocated slots at the first transmission time of each eSCO window. Intermittent lapses due to, for instance, time-critical signaling during connection establishment are allowed. Both master and slave may refrain from sending data and may use instead POLL and NULL packets respectively. When the master transmits a POLL packet instead of an EV4 or EV5 packet the slave shall transmit starting in the same slot as if the master transmitted an EV4 or

EV5 packet. If the slave does not receive anything in the reserved master-to-slave transmission slot it shall transmit in the same slot as if the master had transmitted the negotiated packet type. For example, if the master had negotiated an EV5 packet the slave would transmit three slots later. [If the master does not receive a slave transmission in response to an eSCO packet it causes an implicit NAK of the packet in question. The listening requirements for the slave during the retransmission window are the same as for an active ACL logical transport.

8.6.4 Broadcast scheme

The master of the piconet can broadcast messages to all slaves. A broadcast packet shall have an LT_ADDR set to all zero. Each new broadcast message (which may be carried by a number of packets) shall start with the start of L2CAP message indication (LLID=10).

A broadcast packet shall never be acknowledged. In an error-prone environment, the master may carry out a number of retransmissions to increase the probability for error-free delivery, see also Section 7.6.5 on page 130.

In order to support the **PARK** state (as described in Section 8.9 on page 165), a master transmission shall take place at fixed intervals. This master transmission will act as a beacon to which slaves can synchronize. If no traffic takes place at the beacon event, broadcast packets shall be sent. More information is given in Section 8.9 on page 165.

8.6.5 Role switch

There are several occasions when a role switch is used.

- a role switch is necessary when joining an existing piconet by paging, since by definition, the paging device is initially master of a "small" piconet only involving the pager (master) and the paged (slave) device.
- a role switch is necessary in order for a slave in an existing piconet to set up a new piconet with itself as master and the original piconet master as slave. If the original piconet had more than one slave, then this implies a double role for the original piconet master; it becomes a slave in the new piconet while still maintaining the original piconet as master.

Prior to the role switch, encryption if present, shall be stopped in the old piconet. A role switch shall not be performed if the physical link is in Sniff or Hold mode, in the **PARK** state, or has any synchronous logical transports.

For the master and slave involved in the role switch, the switch results in a reversal of their TX and RX timing: a TDD switch. Additionally, since the piconet parameters are derived from the Bluetooth device address and clock of the master, a role switch inherently involves a redefinition of the piconet as well: a piconet switch. The new piconet's parameters shall be derived from the former slave's device address and clock.

Assume device A is to become master; device B was the former master. Then there are two alternatives: either the slave initiates the role switch or the master initiates the role switch. These alternatives are described in Link Manager Protocol, [Part C] Section 4.4.2 on page 243. The baseband procedure is the same regardless of which alternative is used.

In step 1, the slave A and master B shall perform a TDD switch using the former hopping scheme (still using the Bluetooth device address and clock of device B), so there is no piconet switch yet. The slot offset information sent by slave A shall not be used yet but shall be used in step 3. Device A now becomes the master, device B the slave. The LT_ADDR formerly used by device A in its slave role, shall now be used by slave B.

At the moment of the TDD switch, both devices A and B shall start a timer with a time out of *newconnectionTO*. The timer shall be stopped in slave B as soon as it receives an FHS packet from master A on the TDD-switched channel. The timer shall be stopped in master A as soon as it receives an ID packet from slave B. If the *newconnectionTO* expires, the master and slave shall return to the old piconet timing and AFH state, taking their old roles of master and slave. The FHS packet shall be sent by master A using the "old" piconet parameters. The LT_ADDR in the FHS packet header shall be the former LT_ADDR used by device A. The LT_ADDR carried in the FHS payload shall be the new LT_ADDR intended for device B when operating on the new piconet. After the FHS acknowledgment, which is the ID packet and shall be sent by the slave on the old hopping sequence, both master A and slave B shall use the new channel parameters of the new piconet as indicated by the FHS with the sequence selection set to *basic channel hopping sequence*. If the new master has physi-

cal links that are *AFH enabled*, following the piconet switch the new master is responsible for controlling the AFH operational mode of its new slave.

Since the old and new masters' clocks are synchronized, the clock information sent in the FHS payload shall indicate the new master's clock at the begining of the FHS packet transmission. Furthermore, the 1.25 ms resolution of the clock information given in the FHS packet is not sufficient for aligning the slot boundaries of the two piconets. The slot-offset information in the LMP message previously sent by device A shall be used to provide more accurate timing information. The slot offset indicates the delay between the start of the master-to-slave slots of the old and new piconet channels. This timing information ranges from 0 to 1249 µs with a resolution of 1µs. It shall be used together with the clock information in the FHS packet to accurately position the correlation window when switching to the new master's timing after acknowledgment of the FHS packet.

After reception of the FHS packet acknowledgment, the new master A shall switch to its own timing with the sequence selection set to the *basic channel hopping sequence* and shall send a POLL packet to verify the switch. Both the master and the slave shall start a new timer with a time out of *newconnectionTO* on FHS packet acknowledgment. The start of this timer shall be aligned with the beginning of the first master TX slot boundary of the new piconet, following the FHS packet acknowledgment. The slave shall stop the timer when the POLL packet is received; the master shall stop the timer when the POLL packet is acknowledged. The slave shall respond with any type of packet to acknowledge the POLL. Any pending AFH_Instant shall be cancelled once the POLL packet has been received by the slave. If no response is received, the master shall re-send the POLL packet until *newconnectionTO* is reached. If this timer expires, both the slave and the master shall return to the old piconet timing with the old master and slave roles. Expiry of the timer shall also restore the state associated with AFH (including any pending AFH_Instant), Channel Quality Driven Data Rate (CQDDR, Link Manager Protocol [Part C] Section 4.1.7 on page 219) and power control (Link Manager Protocol [Part C] Section 4.1.3 on page 211). The procedure may then start again beginning at step 1. Aligning the timer with TX boundaries of the new piconet ensures that no device returns to the old piconet timing in the middle of a master RX slot.

After the role switch the ACL logical transport is reinitialized as if it were a new connection. For example, the SEQN of the first data packet containing a CRC on the new piconet channel shall be set according to the rules in section 7.6.2 on page 127.

A parked slave must be unparked before it can participate in a role switch.

8.6.6 Scatternet

Multiple piconets may cover the same area. Since each piconet has a different master, the piconets hop independently, each with their own hopping sequence and phase as determined by the respective master. In addition, the packets carried on the channels are preceded by different channel access codes as determined by the master device addresses. As more piconets are added, the probability of collisions increases; a graceful degradation of performance results as is common in frequency-hopping spread spectrum systems.

If multiple piconets cover the same area, a device can participate in two or more overlaying piconets by applying time multiplexing. To participate on the proper channel, it shall use the associated master device address and proper clock offset to obtain the correct phase. A device can act as a slave in several piconets, but only as a master in a single piconet: since two piconets with the same master are synchronized and use the same hopping sequence, they are one and the same piconet. A group of piconets in which connections exist between different piconets is called a *scatternet*.

A master or slave can become a slave in another piconet by being paged by the master of this other piconet. On the other hand, a device participating in one piconet can page the master or slave of another piconet. Since the paging device always starts out as master, a master-slave role switch is required if a slave role is desired. This is described in the Section 8.6.5 on page 155.

8.6.6.1 Inter-piconet communications

Time multiplexing must be used to switch between piconets. Devices may achieve the time multiplexing necessary to implement scatternet by using sniff mode or by remaining in an active ACL connection. For an ACL connection in piconets where the device is a slave in the **CONNECTION** state, it may choose not to listen in every master slot. In this case it should be recognized that the quality of service on this link may degrade abruptly if the slave is not present enough to match up with the master polling that slave. Similarly, in piconets where the device is master it may choose not to transmit in every master slot. In this case it is important to honor T_{poll} as much as possible. Devices in sniff mode may have sufficient time to visit another piconet in between sniff slots. When the device is a slave using sniff mode and there are not sufficient idle slots, the device may choose to not listen to all master transmission slots in the sniff_attempts period or during the subsequent sniff_timeout period. A master is not required to transmit during sniff slots and therefore has flexibility for scatternet. If SCO or eSCO links are established, other piconets shall only be visited in the non-reserved slots in between reserved slots. This is only possible if there is a single SCO logical transport using HV3 packets or eSCO links where at least four slots remain in between the reserved slots. Since the multiple piconets are not synchronized, guard time must be left to account for misalignment. This means that only 2 slots can effectively be used to visit another piconet in between the HV3 packets.

Since the clocks of two masters of different piconets are not synchronized, a slave device participating in two piconets shall maintain two offsets that, added to its own native clock, create the two master clocks. Since the two master clocks drift independently, the slave must regularly update the offsets in order to keep synchronization to both masters.

8.6.7 Hop sequence switching

Hop sequence adaptation is controlled by the master and can be set to either *enabled* or *disabled*. Once enabled, hop sequence adaptation shall apply to all logical transports on a physical link. Once enabled, the master may periodically update the set of *used* and *unused* channels as well as disable hop sequence adaptation on a physical link. When a master has multiple physical links the state of each link is independent of all other physical links.

When hop sequence adaptation is enabled, the *sequence selection* hop selection kernel input is set to *adapted channel hopping sequence* and the *AFH_channel_map* input is set to the appropriate set of *used* and *unused* channels. Additionally, the *same channel* mechanism shall be used. When hop sequence adaptation is enabled with all channels *used* this is known as AHS(79).

When hop sequence adaptation is disabled, the *sequence selection* input of the hop selection kernel is set to *basic channel hopping sequence* (the *AFH_channel_map* input is unused in this case) and the *same channel* mechanism shall not be used.

The hop sequence adaptation state shall be changed when the master sends the LMP_set_AFH PDU and a baseband acknowledgement is received. When the baseband acknowledgement is received prior to the hop sequence switch instant, *AFH_Instant*, (See Link Manager Protocol [Part C] Section 4.1.4 on page 213) the hop sequence proceeds as shown in Figure 8.9 on page 158.

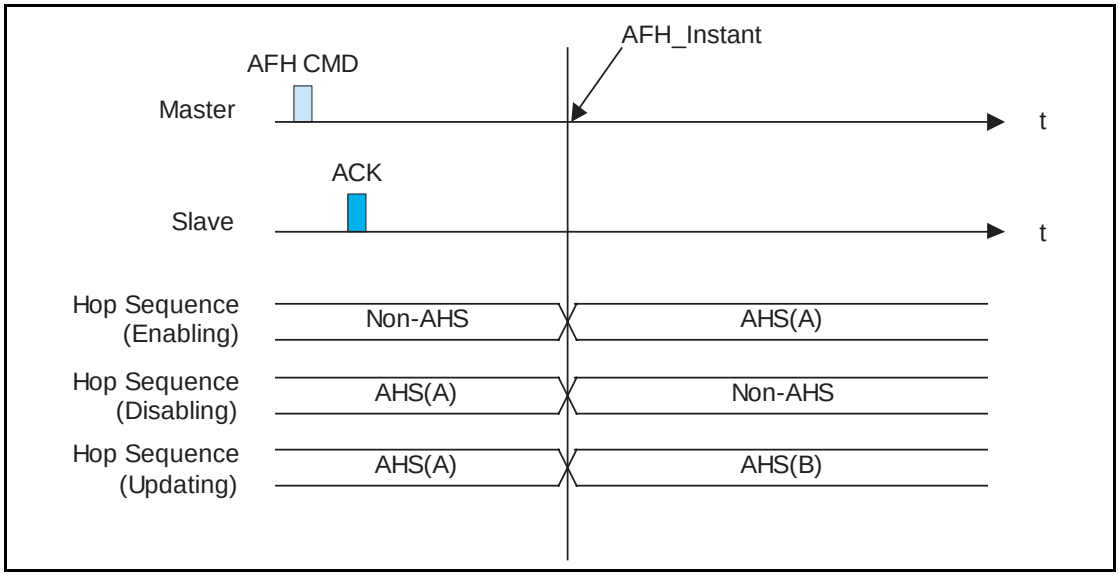

Figure 8.9: Successful hop sequence switching

When the baseband acknowledgement is not received prior to the *AFH_Instant* the master shall use a recovery hop sequence for the slave(s) that did not respond with an acknowledgement (this may be because the slave did not hear the master's transmission or the master did not hear the slave's transmission). When hop sequence adaptation is being enabled or disabled the recovery sequence shall be the *AFH_channel_map* specified in the LMP_set_AFH PDU. When the *AFH_channel_map* is being updated the master shall choose a recovery sequence that includes all of the RF channels marked as *used* in either the old or new *AFH_channel_map,* e.g. AHS(79). Once the baseband acknowledgement is received the master shall use the *AFH_channel_map* in the LMP_set_AFH PDU starting with the next transmission to the slave. See Figure 8.10 on page 159.

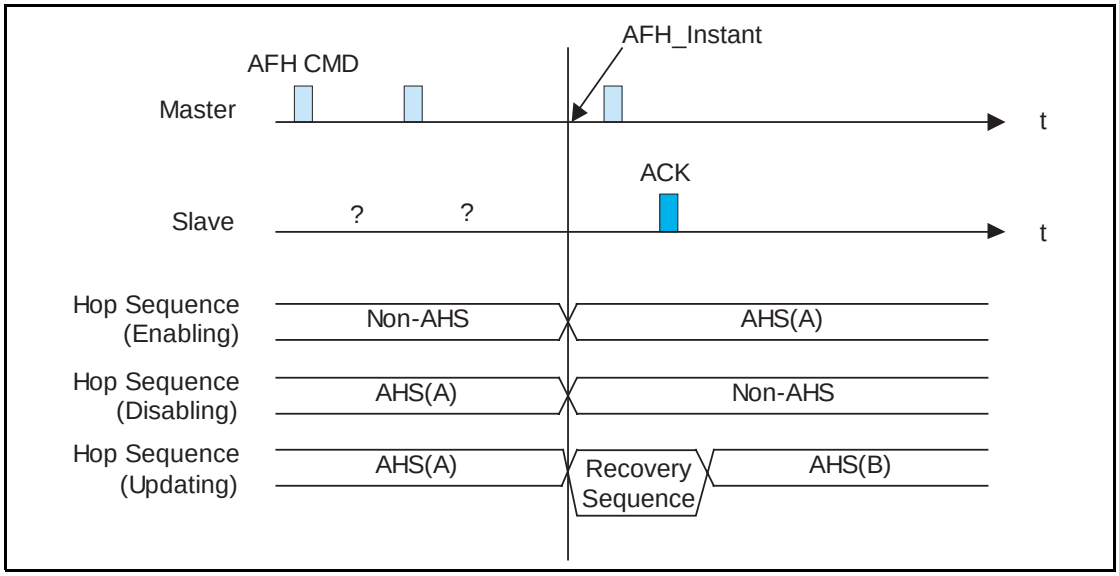

Figure 8.10: Recovery hop sequences

When the *AFH_Instant* occurs during a multi-slot packet transmitted by the master, the slave shall use the same hopping sequence parameters as the master used at the start of the multi-slot packet. An example of this is shown in Figure 8.11 on page 160. In this figure the *basic channel hopping sequence* is designated f. The first *adapted channel hopping sequence* is designated with f', and the second *adapted channel hopping sequence* is designated f''.

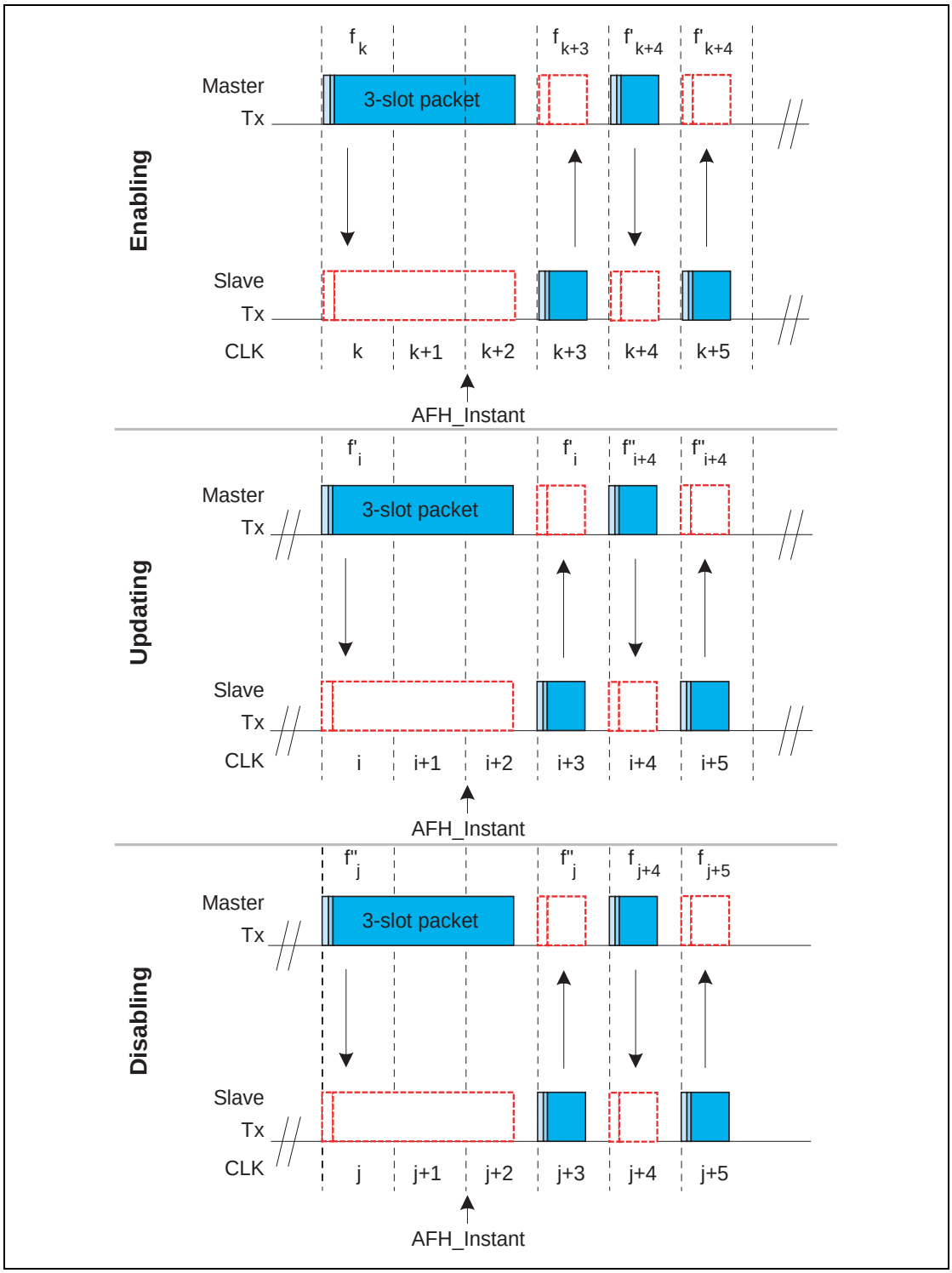

Figure 8.11: AFH_Instant changes during multi-slot packets transmitted by the master.

8.6.8 Channel classification and channel map selection

RF channels are classified as being *unknown, bad or good*. These classifications are determined individually by the master and slaves based on local information (e.g. active or passive channel assessment methods or from the Host via HCI). Information received from other devices via LMP (e.g. an *AFH_channel_map* from a master or a channel classification report from a slave) shall not be included in a device's channel classification.

The three possible channel classifications shall be as defined in Table 8.6 on page 161.

Classification	Definition
unknown	A channel shall be classified as *unknown* if the channel assessment measurements are insufficient to reliably classify the channel, and the channel is not marked as *bad* in the most recent HCI *Set_AFH_Channel_Classification*.
bad	A channel may be classified as *bad* if an ACL or synchronous throughput failure measure associated with it has exceeded a threshold (defined by the particular channel assessment algorithm employed). A channel may also be classified as *bad* if an interference-level measure associated with it, determining the interference level that the link poses upon other systems in the vicinity, has exceeded a threshold (defined by the particular channel assessment algorithm employed). A channel shall be classified as *bad* when it is marked as *bad* in the most recent HCI *Set_AFH_Channel_Classification* command.
good	A channel shall be classified as *good* if it is not either *unknown* or *bad*.

Table 8.6: Channel classification descriptions

A master with AFH enabled physical links shall determine an *AFH_channel_map* based on any combination of the following information:

- Channel classification from local measurements (e.g. active or passive channel assessment in the Controller), if supported and enabled. The Host may enable or disable local measurements using the HCI *Write_AFH_Channel_Classification_Mode* command, defined in the HCI Functional Specification [Part E] Section 7.3.58 on page 510 if HCI is present.
- Channel classification information from the Host using the HCI *Set_AFH_channel_classification* command, defined in the HCI Functional Specification [Part E] Section 7.3.58 on page 510 if HCI is present. Channels classified as *bad* in the most recent *AFH_Host_Channel_Classification* shall be marked as *unused* in the *AFH_channel_map*.
- Channel classification reports received from slaves in *LMP_channel_classification* PDUs, defined in the LMP Specification [Part C] Section 4.1.5 on page 216.

The algorithm used by the master to combine these information sources and generate the *AFH_channel_map* is not defined in the specification and will be implementation specific. At no time shall the number of channels used be less than N_{min}, defined in Section 2.3.1 on page 63.

If a master that determines that all channels should be *used* it may keep AFH operation enabled using an *AFH_channel_map* of 79 *used* channels, i.e. AHS(79).

8.6.9 Power Management

Features are provided to allow low-power operation. These features are both at the microscopic level when handling the packets, and at the macroscopic level when using certain operation modes.

8.6.9.1 Packet handling

In order to minimize power consumption, packet handling is minimized both at TX and RX sides. At the TX side, power is minimized by only sending useful data. This means that if only link control information needs to be exchanged, **NULL** packets may be used. No transmission is required if there is no link control information to be sent, or if the transmission would only involve a NAK (NAK is implicit on no reply). If there is data to be sent, the payload length shall be adapted in order to send only the valid data bytes. At the RX side, packet processing takes place in different steps. If no valid access code is found in the search window, the transceiver may return to sleep. If an access code is found, the receiver device shall start to process the packet header. If the HEC fails, the device may return to sleep after the packet header. A valid header indicates if a payload will follow and how many slots are involved.

8.6.9.2 Slot occupancy

As was described in Section 6.5 on page 105, the packet type indicates how many slots a packet may occupy. A slave not addressed in the packet header may go to sleep for the remaining slots the packet occupies. This can be read from the TYPE code.

8.6.9.3 Recommendations for low-power operation

The most common and flexible methods for reducing power consumption are the use of sniff and park. Hold can also be used by repeated negotiation of hold periods.

8.7 SNIFF MODE

In sniff mode, the duty cycle of the slave's activity in the piconet may be reduced. If a slave is in active mode on an ACL logical transport, it shall listen in every ACL slot to the master traffic, unless that link is being treated as a scatternet link or is absent due to hold mode. With sniff mode, the time slots when a slave is listening are reduced, so the master shall only transmit to a slave in specified time slots. The sniff anchor points are spaced regularly with an interval of T_{sniff}.

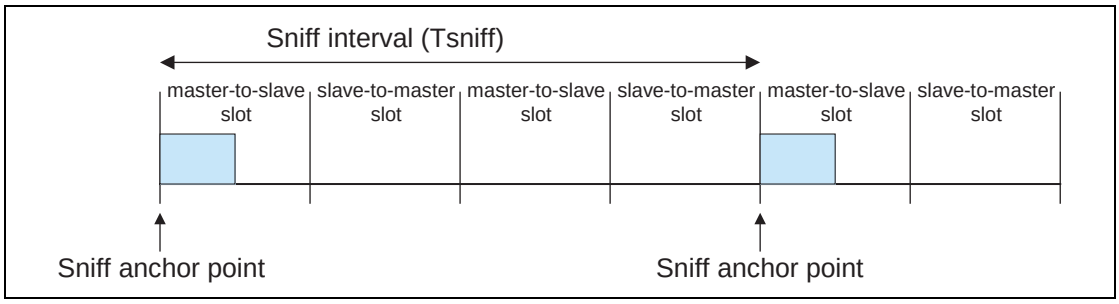

Figure 8.12: Sniff anchor points

The slave listens in master-to-slave transmission slots starting at the sniff anchor point. It shall use the following rules to determine whether to continue listening:

- If fewer than $N_{sniff\ attempt}$ master-to-slave transmission slots have elapsed since the sniff anchor point then the slave shall continue listening.
- If the slave has received a packet with a matching LT_ADDR that contains ACL data (DM, DH, DV, or AUX1 packets) in the preceding $N_{sniff\ timeout}$ master-to-slave transmission slots then it shall continue listening.
- If the slave has transmitted a packet containing ACL data (DM, DH, DV, or AUX1 packets) in the preceding $N_{sniff\ timeout}$ slave-to-master transmission slots then it shall continue listening.
- If the slave has received any packet with a matching LT_ADDR in the preceding $N_{sniff\ timeout}$ master-to-slave transmission slots then it may continue listening.
- A device may override the rules above and stop listening prior to $N_{sniff\ timeout}$ or the remaining $N_{sniff\ attempt}$ slots if it has activity in another piconet.

It is possible that activity from one sniff timeout may extend to the next sniff anchor point. Any activity from a previous sniff timeout shall not affect activity after the next sniff anchor point. So in the above rules, only the slots since the last sniff anchor point are considered.

Note that $N_{sniff\ attempt}$ =1 and $N_{sniff\ timeout}$ =0 cause the slave to listen only at the slot beginning at the sniff anchor point, irrespective of packets received from the master.

$N_{sniff\ attempt}$ =0 shall not be used.

Sniff mode only applies to asynchronous logical transports and their associated LT_ADDR. Sniff mode shall not apply to synchronous logical transports, therefore, both masters and slaves shall still respect the reserved slots and retransmission windows of synchronous links.

To enter sniff mode, the master or slave shall issue a sniff command via the LM protocol. This message includes the sniff interval T_{sniff} and an offset D_{sniff}. In addition, an initialization flag indicates whether initialization procedure 1 or 2 shall be used. The device shall use initialization 1 when the MSB of the current master clock (CLK_{27}) is 0; it shall use initialization 2 when the MSB of the current master clock (CLK_{27}) is 1. The slave shall apply the initialization method as indicated by the initialization flag irrespective of its clock bit value CLK_{27}. The sniff anchor point determined by the master and the slave shall be initialized on the slots for which the clock satisfies the applicable equation:

$$CLK_{27-1} \bmod T_{sniff} = D_{sniff} \qquad \text{for initialization 1}$$

$$(\overline{CLK_{27}}, CLK_{26-1}) \bmod T_{sniff} = D_{sniff} \qquad \text{for initialization 2}$$

this implies that D_{sniff} must be even

After initialization, the clock value CLK(k+1) for the next sniff anchor point shall be derived by adding the fixed interval T_{sniff} to the clock value of the current sniff anchor point:

$$CLK(k+1) = CLK(k) + T_{sniff}$$

8.7.1 Sniff Transition Mode

Sniff transition mode is a special mode which is used during the transition between Sniff and active mode. It is required because during this transition it is unclear which mode (Sniff or Active) the slave is in and it is necessary to ensure that the slave is polled correctly regardless of which mode it is in.

In sniff transition mode the master shall maintain the active mode poll interval in case the slave is in active mode. In addition the master shall poll the slave at least once in the sniff attempt transmit slots starting at each sniff instant: note that this transmission counts for the active mode polling as well. The master must use its high power accurate clock when in Sniff Transition Mode.

The precise circumstances under which the master enters Sniff Transition Mode are defined in [Part C] Section 4.5.3.1 on page 254.

8.8 HOLD MODE

During the **CONNECTION** state, the ACL logical transport to a slave can be put in a **hold** mode. In **hold** mode the slave temporarily shall not support ACL packets on the channel. Any synchronous packet during reserved synchonous slots (from SCO and eSCO links) shall be supported. With the **hold** mode, capacity can be made free to do other things like scanning, paging, inquiring, or attending another piconet. The device in **hold** mode can also enter a low-power sleep mode. During **hold** mode, the slave device keeps its logical transport address(es) (LT_ADDR).

Prior to entering hold mode, master and slave agree on the time duration the slave remains in hold mode. A timer shall be initialized with the *holdTO* value. When the timer is expired, the slave shall wake up, synchronize to the traffic on the channel and will wait for further master transmissions.

8.9 PARK STATE

When a slave does not need to participate on the piconet channel, but still needs to remain synchronized to the channel, it can enter **PARK** state. **PARK** state is a state with very little activity in the slave. In the **PARK** state, the slave shall give up its logical transport address LT_ADDR. Instead, it shall receive two new addresses to be used in the **PARK** state

- PM_ADDR: 8-bit Parked Member Address
- AR_ADDR: 8-bit Access Request Address

The PM_ADDR distinguishes a parked slave from the other parked slaves. This address may be used in the master-initiated unpark procedure. In addition to the PM_ADDR, a parked slave may also be unparked by its 48-bit BD_ADDR. The all-zero PM_ADDR is a reserved address: if a parked device has the all-zero PM_ADDR it can only be unparked by the BD_ADDR. In that case, the PM_ADDR has no meaning. The AR_ADDR shall be used by the slave in the slave-initiated unpark procedure. All messages sent to the parked slaves are carried by broadcast packets.

The parked slave wakes up at regular intervals to listen to the channel in order to re-synchronize and to check for broadcast messages. To support the synchronization and channel access of the parked slaves, the master supports a beacon train described in the next section. The beacon structure is communicated to the slave when it is parked. When the beacon structure changes, the parked slaves are updated through broadcast messages.

The master shall maintain separate non-overlapping park beacon structures for each hop sequence. The beacon structures shall not overlap either their beacon slots or access windows.

In addition for using it for low power consumption, park is used to connect more than seven slaves to a single master. At any one time, only seven slaves can be in the **CONNECTION** state. However, by swapping active and parked slaves out respectively in the piconet, the number of slaves can be much larger (255 if the PM_ADDR is used, and an arbitrarily large number if the BD_ADDR is used).

8.9.1 Beacon train

To support parked slaves, the master establishes a beacon train when one or more slaves are parked. The beacon train consists of one beacon slot or a train of equidistant beacon slots which is transmitted periodically with a constant time interval. The beacon train is illustrated in Figure 8.13 on page 167. A train of N_B ($N_B \geq 1$) beacon slots is defined with an interval of T_B slots. The beacon slots in the train are separated by Δ_B . The start of the first beacon slot is referred to as the **beacon instant** and serves as the beacon timing reference. The beacon parameters N_B and T_B are chosen such that there are sufficient beacon slots for a parked slave to synchronize to during a certain time window in an error-prone environment.

When parked, the slave shall receive the beacon parameters through an LMP command. In addition, the timing of the beacon instant is indicated through the offset D_B. As with the SCO logical transport (see Section 8.6.2 on page 150), two initialization procedures 1 or 2 are used. The master shall use initialization 1 when the MSB of the current master clock (CLK_{27}) is 0; it shall use initialization 2 when the MSB of the current master clock (CLK_{27}) is 1. The chosen initialization procedure shall also be carried by an initialization flag in the LMP command. The slave shall apply the initialization method as indicated by the initialization flag irrespective of its clock bit CLK_{27}. The master-to-slave slot positioned at the beacon instant shall be initialized on the slots for which the clock satisfies the applicable equation:

$$CLK_{27\text{-}1} \bmod T_B = D_B \qquad \text{for initialization 1}$$

$$(\overline{CLK}_{27}, CLK_{26\text{-}1}) \bmod T_B = D_B \qquad \text{for initialization 2}$$

this implies that DB will be even

After initialization, the clock value CLK(k+1) for the next beacon instant shall be derived by adding the fixed interval T_B to the clock value of the current beacon instant:

$$CLK(k+1) = CLK(k) + T_B$$

The beacon train serves four purposes:

1. transmission of master-to-slave packets which the parked slaves can use for re-synchronization
2. carrying messages to the parked slaves to change the beacon parameters
3. carrying general broadcast messages to the parked slaves
4. unparking of one or more parked slaves

Since a slave can synchronize to any packet which is preceded by the proper channel access code, the packets carried on the beacon slots do not have to contain specific broadcast packets for parked slaves to be able to synchronize; any packet may be used. The only requirement placed on the beacon slots is that there is a master-to-slave transmission present on the hopping sequence associated with the park structure. If there is no information to be sent, **NULL** packets may be transmitted by the master. If there is indeed broadcast information to be sent to the parked slaves, the first packet of the broadcast message shall be repeated in every beacon slot of the beacon train. However, synchronous traffic in the synchronous reserved slots may interrupt the beacon transmission if it is on the same hopping sequence as the parked slaves. The master shall configure its park beacon structure so that reserved slots of synchronous logical transports do not cause slaves to miss synchronisation on a beacon slot. For example, a master that has active slaves using AHS, and parked slaves using Non-AHS shall ensure that the Park beacons cannot be interrupted by AHS synchronous reserved slots.

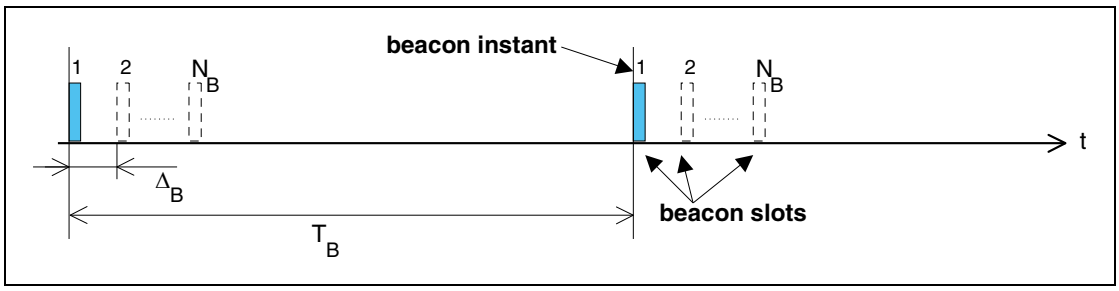

Figure 8.13: General beacon train format

The master can place parked slaves in any of the AFH operating modes, but shall ensure that all parked slaves use the same hop sequence. Masters should use AHS(79) or AHS when all the slaves in the Piconet are AFH capable.

A master that switches a slave between AFH enabled, AFH disabled or AHS(79) operation shall ensure that the AFH_Instant occurs before transmission of the beacon train using this hop sequence.

The master communicates with parked slaves using broadcast messages. Since these messages can be time - critical, an ongoing repetition train of broadcast message may be prematurely aborted by broadcast information destined to parked slaves in beacon slots and in access windows (see Section 8.9.2 on page 168).

8.9.2 Beacon access window

In addition to the beacon slots, an access window is defined where the parked slaves can send requests to be unparked. To increase reliability, the access window may be repeated M_{access} times ($M_{access} \geq 1$), see Figure 8.14 on page 168. The access window starts a fixed delay D_{access} after the beacon instant. The width of the access window is T_{access}.

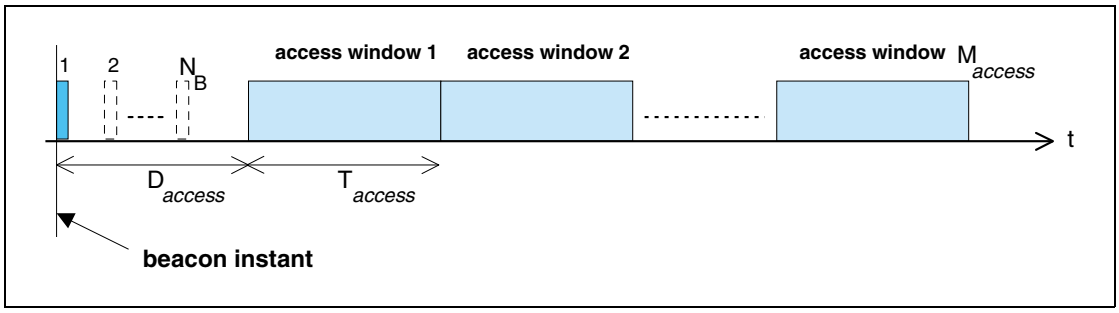

Figure 8.14: Definition of access window

The access window supports a polling slave access technique. The format of the polling technique is shown in Figure 8.15 on page 168. The same TDD structure is used as on the piconet channel, i.e. master-to-slave transmission is alternated with slave-to-master transmission. The slave-to-master slot is divided into two half slots of 312.5 µs each. The half slot a parked slave is allowed to respond in corresponds to its access request address (AR_ADDR), see also section 8.9.6 on page 171. For counting the half slots to determine the access request slot, the start of the access window is used, see Figure 8.15 on page 168. The slave shall only send an access request in the proper slave-to-master half slot if a broadcast packet has been received in the preceding master-to-slave slot. In this way, the master polls the parked slaves.

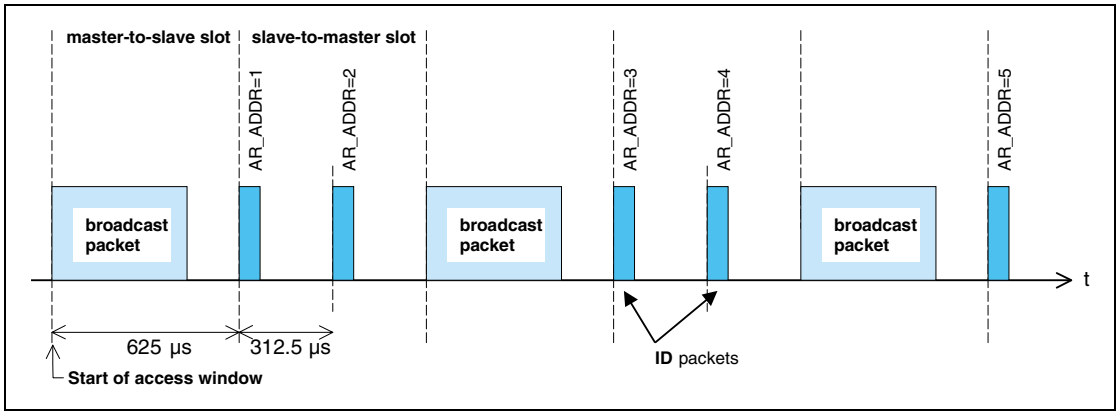

Figure 8.15: Access procedure applying the polling technique.

The slots of the access window may also be used for traffic on the piconet if required. For example, if a synchronous connection has to be supported, the slots reserved for the synchronous link may carry synchronous information

instead of being used for access requests, i.e. if the master-to-slave slot in the access window contains a packet different from a broadcast packet, the following slave-to-master slot shall not be used for slave access requests. If the master transmits a broadcast packet in the access window then it shall use the hop sequence associated with the park structure. Slots in the access window not affected by piconet traffic may still be used according to the defined access structure, (an example is shown in Figure 8.16 on page 169) the access procedure shall be continued as if no interruption had taken place.

When the slave is parked, the master shall indicate what type of access scheme will be used. For the polling scheme, the number of slave-to-master access slots N_{acc_slot} is indicated.

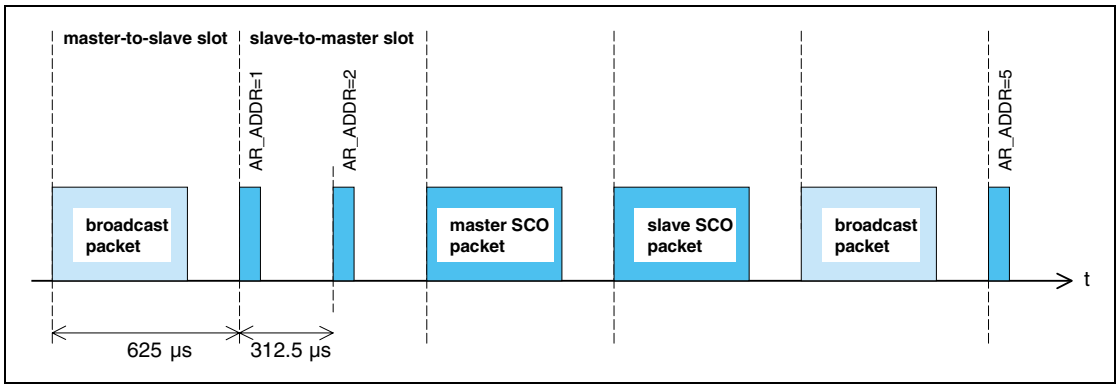

Figure 8.16: Disturbance of access window by SCO traffic

By default, the access window is always present. However, its activation depends on the master sending broadcast messages to the slave at the appropriate slots in the access window. A flag in a broadcast LMP message within the beacon slots may indicate that the access window(s) belonging to this instant will not be activated. This prevents unnecessary scanning of parked slaves that want to request access.

8.9.3 Parked slave synchronization

Parked slaves wake up periodically to re-synchronize to the channel. Any packet exchanged on the channel can be used for synchronization. Since master transmission is mandatory on the beacon slots, parked slaves will use the beacon train to re-synchronize. A parked slave may wake-up at the beacon instant to read the packet sent on the first beacon slot. If this fails, it may retry on the next beacon slot in the beacon train; in total, there are N_B opportunities per beacon instant to re-synchronize. During the search, the slave may increase its search window, see also Section 2.2.5.2 on page 62. The separation between the beacon slots in the beacon train Δ_B shall be chosen such that consecutive search windows will not overlap.

The parked slave may not wake up at every beacon instant. Instead, a sleep interval may be applied which is longer than the beacon interval T_B, see Figure 8.17 on page 170. The slave sleep window shall be a multiple N_{B_sleep} of T_B.

The precise beacon instant the slave may wake up on shall be indicated by the master with D_{B_sleep} which indicates the offset (in multiples of T_B) with respect to the beacon instant ($0 < D_{B_sleep} < N_{B_sleep}-1$). To initialize the wake-up period, the applicable equation shall be used:

$$CLK_{27-1} \bmod (N_{B_sleep} \bullet T_B) = D_B + D_{B_sleep} \bullet T_B \qquad \text{for initialization 1}$$

$$(\overline{CLK_{27}}, CLK_{26-1}) \bmod (N_{B_sleep} \bullet T_B) = D_B + D_{B_sleep} \bullet T_B \qquad \text{for initialization 2}$$

where initialization 1 shall be chosen by the master if the MSB in the current master clock is 0 and initialization 2 shall be chosen by the master if the MSB in the current master clock is 1.

When the master needs to send broadcast messages to the parked slaves, it may use the beacon slots for these broadcast messages. However, if $N_B < N_{BC}$, the slots following the last beacon slot in the beacon train shall be used for the remaining $N_{BC}-N_B$ broadcast packets. If $N_B > N_{BC}$, the broadcast message shall be repeated on all N_B beacon slots.

A parked slave shall read the broadcast messages sent in the beacon slot(s) it wakes up in. If the parked slave wakes up, the minimum wake-up activity shall be to read the channel access code for re-synchronization and the packet header to check for broadcast messages.

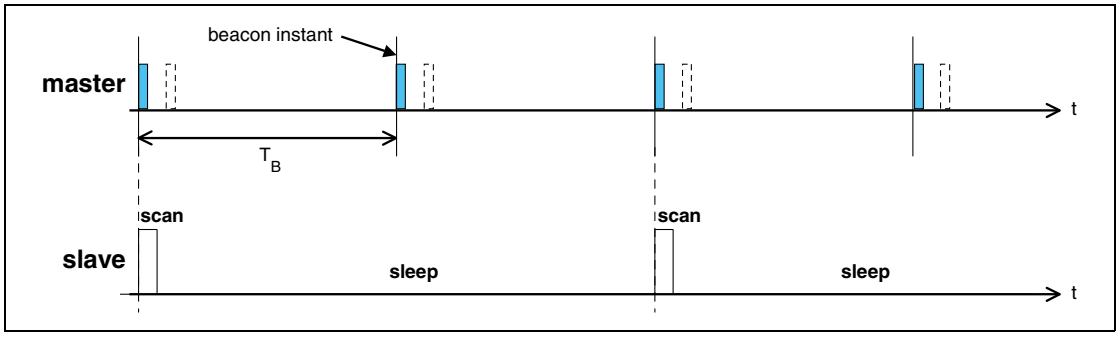

Figure 8.17: Extended sleep interval of parked slaves.

8.9.4 Parking

A master can park an active slave through the exchange of LMP commands. Before being put into park, the slave shall be assigned a PM_ADDR and an AR_ADDR. Every parked slave shall have a unique PM_ADDR or a PM_ADDR of 0. The AR_ADDR is not necessarily unique. The beacon parameters shall be given by the master when the slave is parked. The slave shall then give up its LT_ADDR and shall enter **PARK** state. A master can park only a single slave at a time. The park message is carried with a normal data packet and addresses the slave through its LT_ADDR.

8.9.5 Master-initiated unparking

The master can unpark a parked slave by sending a dedicated LMP unpark command including the parked slave's address. This message shall be sent in a broadcast packet on the beacon slots. The master shall use either the slave's PM_ADDR, or its BD_ADDR. The message also includes the logical transport address LT_ADDR the slave shall use after it has re-entered the piconet. The unpark message may include a number of slave addresses so that multiple slaves may be unparked simultaneously. For each slave, a different LT_ADDR shall be assigned.

After having received the unpark message, the parked slave matching the PM_ADDR or BD_ADDR shall leave the **PARK** state and enter the **CONNECTION** state. It shall keep listening to the master until it is addressed by the master through its LT_ADDR. The first packet sent by the master shall be a POLL packet. The return packet in response to the POLL packet confirms that the slave has been unparked. If no response packets from the slave is received for *newconnectionTO* number of slots after the end of beacon repetition period, the master shall unpark the slave again. The master shall use the same LT_ADDR on each unpark attempt until it has received a link supervision timeout for that slave or the unpark has completed successfully. If the slave does not receive the POLL packet for *newconnectionTO* number of slots after the end of beacon repetition period, it shall return to park, with the same beacon parameters. After confirming that the slave is in the **CONNECTION** state, the master decides in which mode the slave will continue.

When a device is unparked, the SEQN bit for the link shall be reset to 1 on both the master and the slave (see Section 7.6.2.1 on page 128).

8.9.6 Slave-initiated unparking

A slave can request access to the channel through the access window defined in section 8.9.2 on page 168. As shown in Figure 8.15 on page 168, the access window includes several slave-to-master half slots where the slave may send an access request message. The specific half slot the slave is allowed to respond in, corresponds to its access request address (AR_ADDR) which it received when it was parked. The order of the half slots (in Figure 8.15 the AR_ADDR numbers linearly increase from 1 to 5) is not fixed: an LMP command sent in the beacon slots may reconfigure the access window. When a slave desires access to the channel, it shall send an access request message in the proper slave-to-master half slot. The access request message of the slave is the **ID** packet containing the device access code (DAC) of the master (which is the channel access code without the trailer). The parked slave shall only transmit an access request message in the half slot, when in the preceding master-to-slave slot a broadcast packet has been received. This broadcast message may contain any kind of broadcast information not necessarily related to the parked slave(s). If no broadcast information is available, a broadcast **NULL** or broadcast **POLL** packet shall be sent.

After having sent an access request, the parked slave shall listen for an unpark message from the master. As long as no unpark message is received, the slave shall repeat the access requests in the subsequent access windows. After the last access window (there are M_{access} windows in total, see Section 8.9.2 on page 168), the parked slave shall listen for an additional N_{poll} time slots for an unpark message. If no unpark message is received within N_{poll} slots after the end of the last access window, the slave may return to sleep and retry an access attempt after the next beacon instant.

After having received the unpark message, the parked slave matching the PM_ADDR or BD_ADDR shall leave the **PARK** state and enter the **CONNECTION** state. It shall keep listening to the master until it is addressed by the master through its LT_ADDR. The first packet sent by the master shall be a POLL packet. The return packet in response to the POLL packet confirms that the slave has been unparked. After confirming that the slave is in the **CONNECTION** state, the master decides in which mode the slave will continue. If no response packet from the slave is received for *newconnectionTO* number of slots after N_{poll} slots after the end of the last access window, the master shall send the unpark message to the slave again. If the slave does not receive the POLL packet for *newconnectionTO* number of slots after N_{poll} slots after the end of the last access window, it shall return to park, with the same beacon parameters.

When a device is unparked, the SEQN bit for the link shall be reset to 1 on both the master and the slave (see Section 7.6.2.1 on page 128).

8.9.7 Broadcast scan window

In the beacon train, the master can support broadcast messages to the parked slaves. However, it may extend its broadcast capacity by indicating to the parked slaves that more broadcast information is following after the beacon train. This is achieved by an LMP command ordering the parked slaves (as well as the active slaves) to listen to the channel for broadcast messages during a limited time window. This time window starts at the beacon instant and continues for the period indicated in the LMP command sent in the beacon train.

8.9.8 Polling in the park state

In the **PARK** state, parked slaves may send access requests in the access window provided a broadcast packet is received in the preceding master-to-slave slot. Slaves in the **CONNECTION** state shall not send in the slave-to-master slots following the broadcast packet, since they are only allowed to send if addressed specifically.

9 AUDIO

On the air-interface, either a 64 kb/s log PCM (Pulse Code Modulation) format (A-law or μ-law) may be used, or a 64 kb/s CVSD (Continuous Variable Slope Delta Modulation) may be used. The latter format applies an adaptive delta modulation algorithm with syllabic companding.

The voice coding on the line interface is designed to have a quality equal to or better than the quality of 64 kb/s log PCM.

Table 9.1 on page 173 summarizes the voice coding schemes supported on the air interface. The appropriate voice coding scheme is selected after negotiations between the Link Managers.

Voice Codecs	
linear	CVSD
8-bit logarithmic	A-law
	μ-law

Table 9.1: Voice coding schemes supported on the air interface.

9.1 LOG PCM CODEC

Since the synchronous logical transports on the air-interface can support a 64 kb/s information stream, a 64 kb/s log PCM traffic can be used for transmission. Either A-law or μ-law compression may be applied. In the event that the line interface uses A-law and the air interface uses μ-law or vice versa, a conversion from A-law to μ-law shall be performed. The compression method shall follow ITU-T recommendations G. 711.

9.2 CVSD CODEC

A more robust format for voice over the air interface is delta modulation. This modulation scheme follows the waveform where the output bits indicate whether the prediction value is smaller or larger then the input waveform. To reduce slope overload effects, syllabic companding is applied: the step size is adapted according to the average signal slope. The input to the CVSD encoder shall be 64 ksamples/s linear PCM (typically 16 bits, but actual value is implementation specific). Block diagrams of the CVSD encoder and CVSD decoder are shown in Figure 9.1 on page 174, Figure 9.2 on page 174 and Figure 9.3 on page 174. The system shall be clocked at 64 kHz.

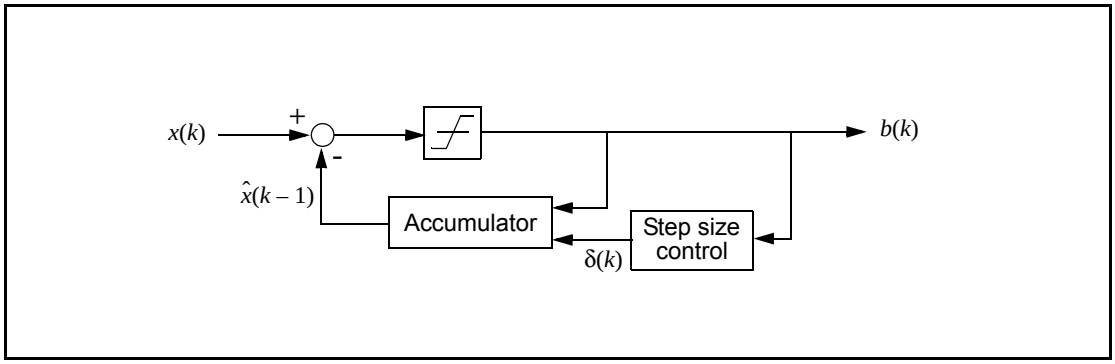

Figure 9.1: Block diagram of CVSD encoder with syllabic companding.

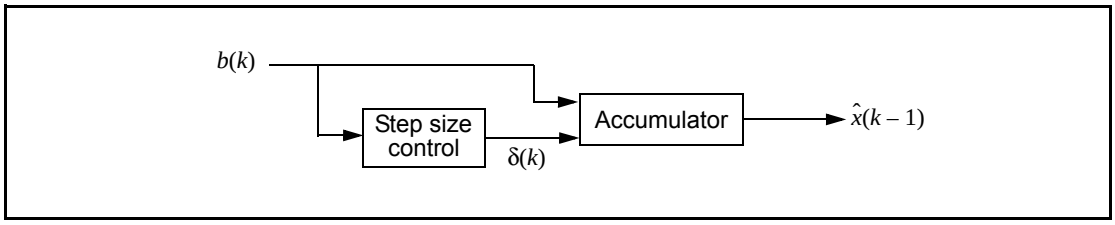

Figure 9.2: Block diagram of CVSD decoder with syllabic companding.

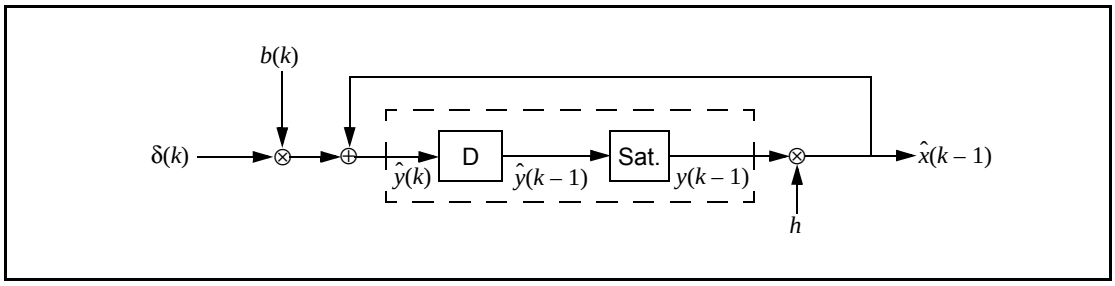

Figure 9.3: Accumulator procedure.

Let $\mathrm{sgn}(x) = 1$ for $x \geq 0$, otherwise $\mathrm{sgn}(x) = -1$. On air these numbers shall be represented by the sign bit; i.e. negative numbers are mapped on “1” and positive numbers are mapped on “0”.

Denote the CVSD encoder output bit $b(k)$, the encoder input $x(k)$, the accumulator contents $y(k)$, and the step size $\delta(k)$. Furthermore, let *h* be the decay factor for the accumulator, let β denote the decay factor for the step size, and, let α be the syllabic companding parameter. The latter parameter monitors the slope by considering the *K* most recent output bits

Let

$$\hat{x}(k) = hy(k). \qquad \text{(EQ 12)}$$

Then, the CVSD encoder internal state shall be updated according to the following set of equations:

$$b(k) = \mathrm{sgn}\{x(k) - \hat{x}(k-1)\}, \qquad \text{(EQ 13)}$$

$$\alpha = \begin{cases} 1, & \text{if } J \text{ bits in the last } K \text{ output bits are equal,} \\ 0, & \text{otherwise,} \end{cases} \qquad \text{(EQ 14)}$$

$$\delta(k) = \begin{cases} \min\{\delta(k-1) + \delta_{min}, \delta_{max}\}, & \alpha = 1, \\ \max\{\beta\delta(k-1), \delta_{min}\}, & \alpha = 0, \end{cases} \qquad \text{(EQ 15)}$$

$$y(k) = \begin{cases} \min\{\hat{y}(k), y_{max}\}, & \hat{y}(k) \geq 0. \\ \max\{\hat{y}(k), y_{min}\}, & \hat{y}(k) < 0. \end{cases} \qquad \text{(EQ 16)}$$

where

$$\hat{y}(k) = \hat{x}(k-1) + b(k)\delta(k). \qquad \text{(EQ 17)}$$

In these equations, δ_{min} and δ_{max} are the minimum and maximum step sizes, and, y_{min} and y_{max} are the accumulator's negative and positive saturation values, respectively. Over air, the bits shall be sent in the same order they are generated by the CVSD encoder.

For a 64 kb/s CVSD, the parameters as shown in Table 9.2 shall be used. The numbers are based on a 16 bit signed number output from the accumulator. These values result in a time constant of 0.5 ms for the accumulator decay, and a time constant of 16 ms for the step size decay

Parameter	Value
h	$1 - \frac{1}{32}$
β	$1 - \frac{1}{1024}$
J	4
K	4
δ_{min}	10
δ_{max}	1280
y_{min}	-2^{15} or $-2^{15} + 1$
y_{max}	$2^{15} - 1$

Table 9.2: CVSD parameter values. The values are based on a 16 bit signed number output from the accumulator.

9.3 ERROR HANDLING

In the **DV**, **HV3**,**EV3** and **EV5** packets, the voice is not protected by FEC. The quality of the voice in an error-prone environment then depends on the robustness of the voice coding scheme and, in the case of eSCO, the retransmission scheme. CVSD, in particular, is rather insensitive to random bit errors, which are experienced as white background noise. However, when a packet is rejected because either the channel access code, the HEC test was unsuccessful, or the CRC has failed, measures have to be taken to “fill” in the lost speech segment.

The voice payload in the **HV2** and **EV4** packets are protected by a 2/3 rate FEC. For errors that are detected but cannot be corrected, the receiver should try to minimize the audible effects. For instance, from the 15-bit FEC segment with uncorrected errors, the 10-bit information part as found before the FEC decoder should be used. The **HV1** packet is protected by a 3 bit repetition FEC. For this code, the decoding scheme will always assume zero or one-bit errors. Thus, there exist no detectable but uncorrectable error events for **HV1** packets.

9.4 GENERAL AUDIO REQUIREMENTS

9.4.1 Signal levels

For A-law and μ-law log-PCM encoded signals the requirements on signal levels shall follow the ITU-T recommendation G.711.

Full swing at the 16 bit linear PCM interface to the CVSD encoder is defined to be 3 dBm0.

9.4.2 CVSD audio quality

For Bluetooth audio quality the requirements are put on the transmitter side. The 64 ksamples/s linear PCM input signal should have negligible spectral power density above 4 kHz. The power spectral density in the 4-32 kHz band of the decoded signal at the 64 ksample/s linear PCM output, should be more than 20 dB below the maximum in the 0-4 kHz range.

10 LIST OF FIGURES

Figure 1.1: Piconets with a single slave operation (a), a multi-slave operation (b) and a scatternet operation (c). 53
Figure 1.2: Standard packet format. 53
Figure 1.3: Bluetooth clock. 54
Figure 1.4: Format of BD_ADDR. 55

Figure 2.1: Multi-slot packets 59
Figure 2.2: Derivation of CLK in master (a) and in slave (b). 60
Figure 2.3: RX/TX cycle of master transceiver in normal mode for single-slot packets. 61
Figure 2.4: RX/TX cycle of slave transceiver in normal mode for single-slot packets. 62
Figure 2.5: RX timing of slave returning from hold mode. 63
Figure 2.6: Derivation of CLKE. 64
Figure 2.7: RX/TX cycle of transceiver in PAGE mode. 65
Figure 2.8: Timing of page response packets on successful page in first half slot 66
Figure 2.9: Timing of page response packets on successful page in second half slot 67
Figure 2.10: Timing of inquiry response packet on successful inquiry in first half slot 69
Figure 2.11: Timing of inquiry response packet on successful inquiry in second half slot 69
Figure 2.12: General block diagram of hop selection scheme. 71
Figure 2.13: Hop selection scheme in CONNECTION state. 72
Figure 2.14: Single- and multi-slot packets. 73
Figure 2.15: Example of the same channel mechanism. 73
Figure 2.16: Block diagram of the basic hop selection kernel for the hop system. 74
Figure 2.17: XOR operation for the hop system. 75
Figure 2.18: Permutation operation for the hop system. 76
Figure 2.19: Butterfly implementation. 76
Figure 2.20: Block diagram of adaptive hop selection mechanism 78

Figure 4.1: Functional diagram of TX buffering. 87
Figure 4.2: Functional diagram of RX buffering 91

Figure 6.1: General packet format. 97
Figure 6.2: Access code format 98
Figure 6.3: Preamble 99
Figure 6.4: Construction of the sync word. 100

Figure 6.5: LFSR and the starting state to generate 102
Figure 6.6: Trailer in CAC when MSB of sync word is 0 (a), and when MSB of sync word is 1 (b). 102
Figure 6.7: Header format. 103
Figure 6.8: Format of the FHS payload. 107
Figure 6.9: DV packet format 109
Figure 6.10: Payload header format for single-slot ACL packets. 113
Figure 6.11: Payload header format for multi-slot ACL packets. 113

Figure 7.1: Header bit processes. 117
Figure 7.2: Payload bit processes. 117
Figure 7.3: The LFSR circuit generating the HEC. 118
Figure 7.4: Initial state of the HEC generating circuit. 119
Figure 7.5: HEC generation and checking. 119
Figure 7.6: The LFSR circuit generating the CRC. 120
Figure 7.7: Initial state of the CRC generating circuit. 120
Figure 7.8: CRC generation and checking. 120
Figure 7.9: Data whitening LFSR. 121
Figure 7.10: Bit-repetition encoding scheme. 122
Figure 7.11: LFSR generating the (15,10) shortened Hamming code. 123
Figure 7.12: Stage 1 of the receive protocol for determining the ARQN bit. 125
Figure 7.13: Stage 2 (ACL) of the receive protocol for determining the ARQN bit. 126
Figure 7.14: Stage 2 (eSCO) of the receive protocol for determining the ARQN bit. 127
Figure 7.15: Transmit filtering for packets with CRC. 128
Figure 7.16: Broadcast repetition scheme 131

Figure 8.1: State diagram of link controller. 133
Figure 8.2: Conventional page (a), page while one synchronous link present (b), page while two synchronous links present (c). 138
Figure 8.3: Messaging at initial connection when slave responds to first page message. 140
Figure 8.4: Messaging at initial connection when slave responds to second page message. 140
Figure 8.5: Connection state. 148
Figure 8.6: RX/TX timing in multi-slave configuration 149
Figure 8.7: eSCO Window Details for Single-Slot Packets 153
Figure 8.8: eSCO Window Details for Asymmetric Traffic 153
Figure 8.9: Successful hop sequence switching 158
Figure 8.10: Recovery hop sequences 159
Figure 8.11: AFH_Instant changes during multi-slot packets transmitted by the master. 160

Figure 8.12: Sniff anchor points 163
Figure 8.13: General beacon train format 167
Figure 8.14: Definition of access window 168
Figure 8.15: Access procedure applying the polling technique. 168
Figure 8.16: Disturbance of access window by SCO traffic 169
Figure 8.17: Extended sleep interval of parked slaves. 170

Figure 9.1: Block diagram of CVSD encoder with syllabic companding. ...174
Figure 9.2: Block diagram of CVSD decoder with syllabic companding. ...174
Figure 9.3: Accumulator procedure. 174

Appendix A: General Audio Requirements

Figure SLR measurement set-up. 183
Figure RLR measurement set-up. 183
Figure Plot of recommended frequency mask for Bluetooth. The GSM send frequency mask is given for comparison (dotted line) 184

Appendix C: Recommendations for AFH Operation in Park, Hold and Sniff

Figure Timing constraint on AFH_Instant with slaves in park, hold and sniff 188

11 LIST OF TABLES

Table 2.1: Control of the butterflies for the hop system 75
Table 2.2: Control for hop system. 79

Table 6.1: Summary of access code types. 98
Table 6.2: Packets defined for synchronous and asynchronous logical transport types. 105
Table 6.3: Description of the FHS payload 107
Table 6.4: Contents of SR field 108
Table 6.5: Contents of page scan mode field.....108
Table 6.6: Logical link LLID field contents.....113
Table 6.7: Use of payload header flow bit on the logical links. 115
Table 6.8: Link control packets 116
Table 6.9: ACL packets.....116
Table 6.10: Synchronous packets.....116

Table 8.1: Relationship between scan interval, and paging modes R0, R1 and R2. 135
Table 8.2: Relationship between train repetition, and paging modes R0, R1 and R2 when synchronous links are present.....138
Table 8.3: Initial messaging during start-up. 139
Table 8.4: Increase of train repetition when synchronous links are present. 146
Table 8.5: Messaging during inquiry routines. 147
Table 8.6: Channel classification descriptions 161

Table 9.1: Voice coding schemes supported on the air interface.....173
Table 9.2: CVSD parameter values. The values are based on a 16 bit signed number output from the accumulator.....175

Appendix A: General Audio Recommendations
Table Recommended Frequency Mask for Bluetooth.....184

APPENDIX A: GENERAL AUDIO RECOMMENDATIONS

MAXIMUM SOUND PRESSURE

It is the sole responsibility of each manufacturer to design their audio products in a safe way with regards to injury to the human ear. The Bluetooth Specification doesn't specify maximum sound pressure from an audio device.

OTHER TELEPHONY NETWORK REQUIREMENTS

It is the sole responsibility of each manufacturer to design the Bluetooth audio product so that it meets the regulatory requirements of all telephony networks that it may be connected to.

AUDIO LEVELS FOR BLUETOOTH

Audio levels shall be calculated as Send Loudness Rating, SLR, and Receive Loudness Rating, RLR. The calculation methods are specified in ITU-T Recommendation P.79.

The physical test set-up for Handsets and Headsets is described in ITU-T Recommendation P.51 and P.57

The physical test set-up for speakerphones and "Vehicle handsfree systems" is specified in ITU-T Recommendation P.34.

A general equation for computation of loudness rating (LR) for telephone sets is given by ITU-T recommendations P.79 and is given by

$$LR = -\frac{10}{m}\log_{10}\left(\sum_{i=N_1}^{N_2} 10^{m(s_i - w_i)/10}\right), \qquad \text{(EQ 18)}$$

where

m is a constant (~ 0.2).

w_i = weighting coefficient (different for the various LRs).

S_i = the sensitivity at frequency F_i, of the electro-acoustic path

N_1,N_2, consecutive filter bank numbers (Art. Index: 200-4000 Hz)

(EQ 18) on page 182 is used for calculating the (SLR) according to Figure on page 183, and (RLR) according to Figure on page 183. When calculating LRs one must only include those parts of the frequency band where an actual signal transmission can occur in order to ensure that the additive property of LRs is retained. Therefore ITU-T P.79 uses only the frequency band 200-4000 Hz in LR computations.

MICROPHONE PATH

SLR measurement model

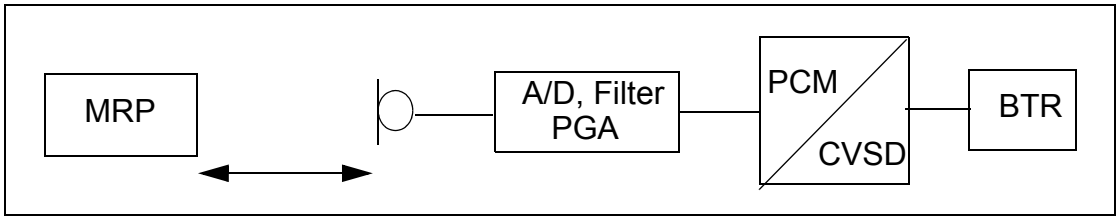

SLR measurement set-up.

LOUDSPEAKER PATH

RLR measurement model

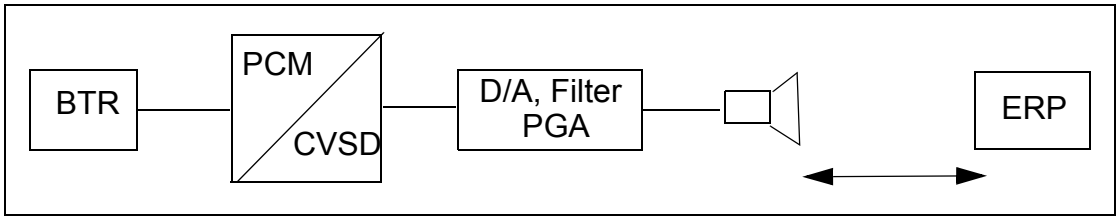

RLR measurement set-up.

BLUETOOTH VOICE INTERFACE

The specification for the Bluetooth voice interface should follow in the first place the *ITU-T Recommendations P.79*, which specifies the loudness ratings for telephone sets. These recommendations give general guidelines and specific algorithms used for calculating the loudness ratings of the audio signal with respect to Ear Reference Point (ERP).

For Bluetooth voice interface to the different cellular system terminals, loudness and frequency recommendations based on the cellular standards should be used. For example, GSM 03.50 gives recommendation for both the loudness ratings and frequency mask for a GSM terminal interconnection with Bluetooth.

1- The output of the CVSD decoder are 16-bit linear PCM digital samples, at a sampling frequency of 8 ksample/second. Bluetooth also supports 8-bit log PCM samples of A-law and μ-law type. The sound pressure at the ear reference point for a given 16-bit CVSD sample, should follow the sound pressure level given in the cellular standard specification.

2- A maximum sound pressure which can be represented by a 16-bit linear PCM sample at the output of the CVSD decoder should be specified according to the loudness rating, in ITU P.79 and at PGA value of 0 dB. Programmable Gain Amplifiers (PGAs) are used to control the audio level at the terminals by the user. For conversion between various PCM representations: A-law, μ-law and linear PCM, ITU-T G.711, G.712, G.714 give guidelines and PCM value relationships. Zero-code suppression based on ITU-T G.711 is also recommended to avoid network mismatches.

FREQUENCY MASK

For interfacing a Bluetooth terminal to a digital cellular mobile terminal, a compliance of the CVSD decoder signal to the frequency mask given in the cellular standard, is recommended to guarantee correct function of the speech coders. A recommendation for a frequency mask is given in the Table below. The Figure below shows a plot of the frequency mask for Bluetooth (solid line). The GSM frequency mask (dotted line) is shown in Figure for comparison.

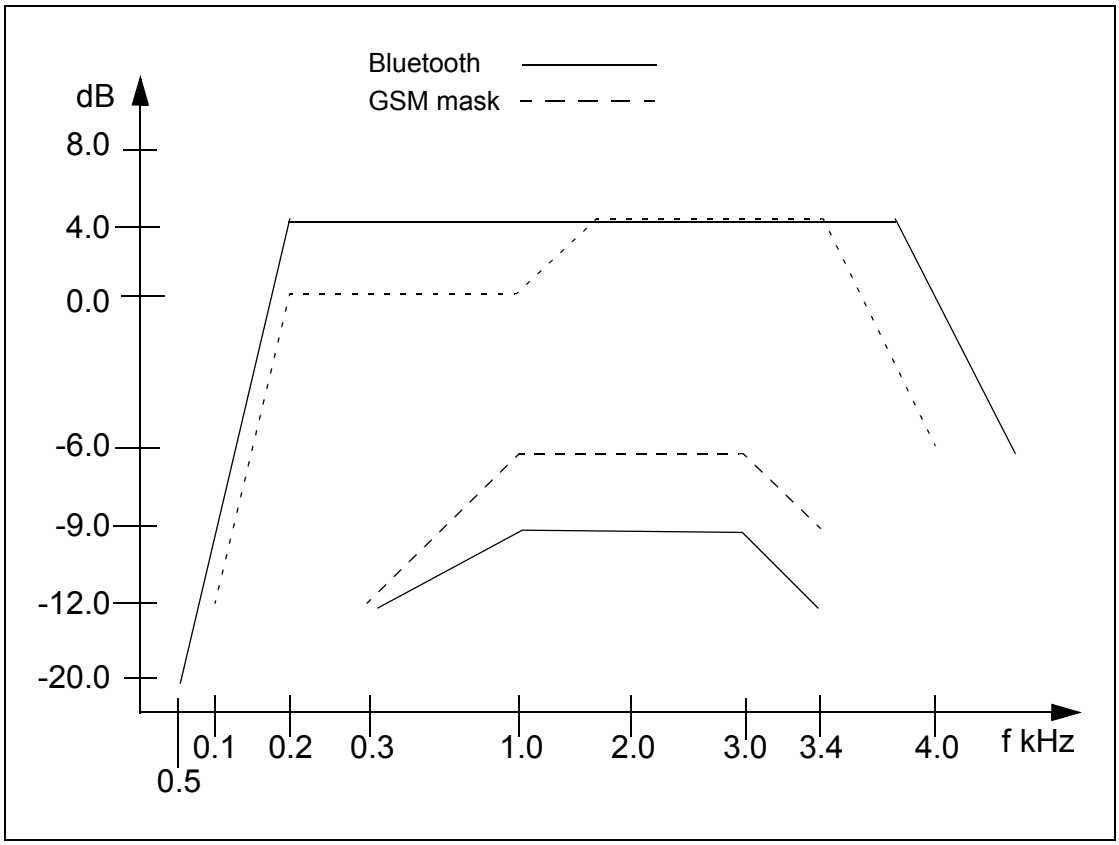

Plot of recommended frequency mask for Bluetooth. The GSM send frequency mask is given for comparison (dotted line)

Frequency (Hz)	Upper Limit (dB)	Lower Limit (dB)
50	-20	-
300	4	-12
1000	4	-9
2000	4	-9
3000	4	--9
3400	4	-12
4000	0	-

Recommended Frequency Mask for Bluetooth

APPENDIX B: TIMERS

This appendix contains a list of Baseband timers related to inactivity timeout defined in this specification. Definitions and default values of the timers are listed below

All timer values are given in slots.

LIST OF TIMERS

inquiryTO

The *inquiryTO* defines the number of slots the **inquiry** substate will last. The timer value may be changed by the host. HCI provides a a command to change the timer value.

pageTO

The *pageTO* defines the number of slots the **page** substate can last before a response is received. The timer value may be changed by the host. HCI provides a a command to change the timer value.

pagerespTO

In the slave, it defines the number of slots the slave awaits the master's response, FHS packet, after sending the page acknowledgment ID packet. In the master, *pagerespTO* defines the number of slots the master should wait for the FHS packet acknowledgment before returning to **page** substate. Both master and slave units should use the same value for this timeout, to ensure common page/scan intervals after reaching *pagerespTO*.

The *pagerespTO*value is 8 slots.

newconnectionTO

Every time a new connection is started through paging, scanning, role switch or unparking, the master sends a POLL packet as the first packet in the new connection. Transmission and acknowledgment of this POLL packet is used to confirm the new connection. If the POLL packet is not received by the slave or the response packet is not received by the master for *newconnectionTO* number of slots, both the master and the slave will return to the previous substate.

newconnectionTO value is 32 slots.

supervisionTO

The *supervisionTO* is used by both the master and slave to monitor link loss. Ifa device does not receive any packets that pass the HEC check and have theproper LT_ADDR for a period of *supervisionTO*, it will reset the link. The supervision timer keeps running in hold mode, sniff mode and park state.

The *supervisionTO* value may be changed by the host. HCI provides a a command to change the timer value. At the baseband level a default value that is equivalent to 20 seconds will be used.

APPENDIX C: RECOMMENDATIONS FOR AFH OPERATION IN PARK, HOLD AND SNIFF

The three possible AFH operation modes for an AFH capable slave in park, hold and sniff are the same three AFH operation modes used during **CONNECTION** state:

- *Enabled* (using the same AHS as slaves in the **CONNECTION** state)
- *Enabled* (using AHS(79))
- *Disabled*

The master may place an AFH capable slave in any of the three AFH operating modes.

Operation at the Master

A master that has one or more slaves in park, hold or sniff and decides to update them simultaneously shall schedule an *AFH_Instant* for a time that allows it to update all these slaves (as well as its active slaves) with the new adaptation.

A master that has multiple slaves with non-overlapping “wake” times (e.g. slaves in sniff mode with different timing parameters) may keep them *enabled* on the same adaptation provided that its scheduling of the *AFH_Instant* allows enough time to update them all.

This timing is summarized in the figure below. In this example the master decides that a hop sequence adaptation is required. However it cannot schedule an *AFH_Instant* until it has informed its active slave, its slave in hold, its slave in sniff, and had time to un-park its parked slaves.

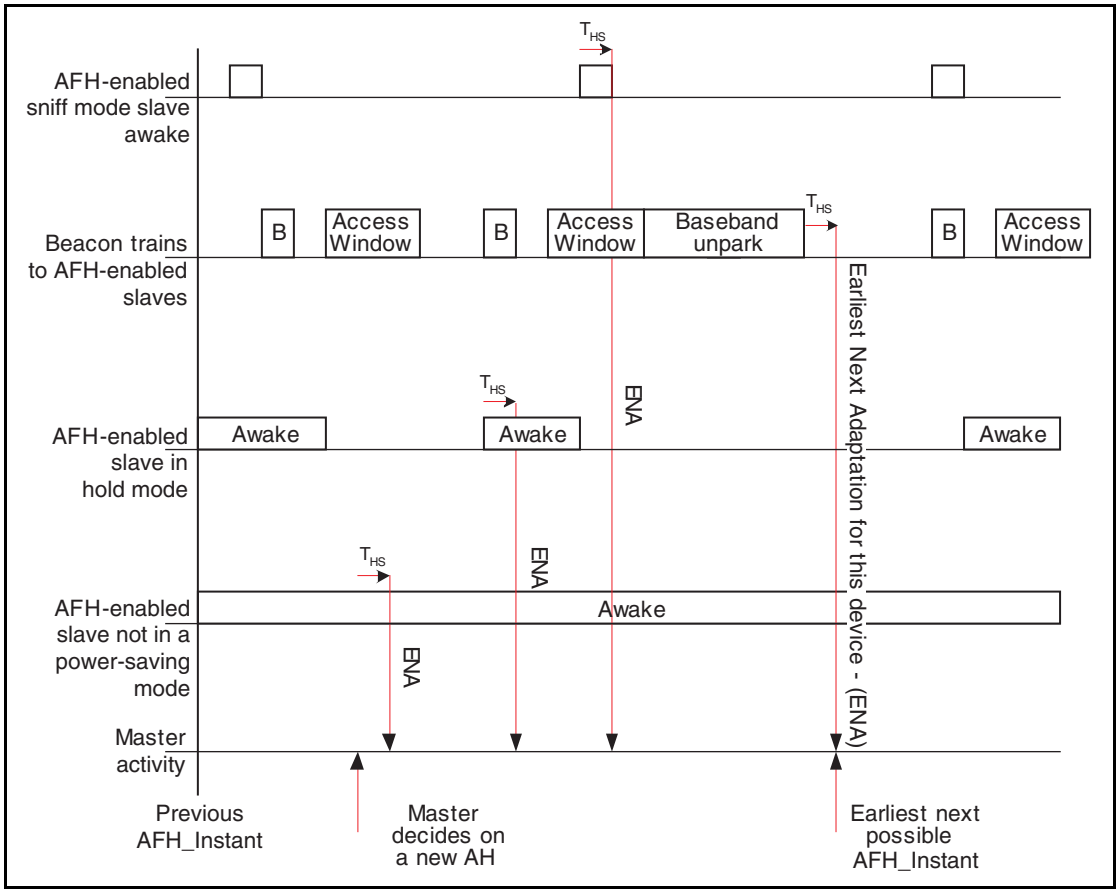

Timing constraint on AFH_Instant with slaves in park, hold and sniff

Operation in park

A slave that is in the Park state cannot send or receive any AFH LMP messages. Once the slave has left the Park state the master may subsequently update the slave's adaptation.

AFH Operation in Sniff

Once a slave has been placed in sniff mode, the master may periodically change its AHS without taking the slave out of sniff mode.

AFH Operation in Hold

A slave that is in hold mode cannot send or receive any LMP messages. Once the slave has left hold mode the master may subsequently update the slave's adaptation.

Core System Package [Controller volume]
Part C

LINK MANAGER PROTOCOL

This specification describes the Link Manager Protocol (LMP) which is used for link set-up and control. The signals are interpreted and filtered out by the Link Manager on the receiving side and are not propagated to higher layers.

CONTENTS

1 Introduction 195

2 General Rules 197

2.1 Message Transport 197
2.2 Synchronization 197
2.3 Packet Format 198
2.4 Transactions 199
2.4.1 LMP Response Timeout 200
2.5 Error Handling 200
2.5.1 Transaction collision resolution 201
2.6 Procedure Rules 201
2.7 General Response Messages 202
2.8 Specification Writing Policies 202

3 Device Features 203

3.1 General Description 203
3.2 Feature Definitions 203
3.3 Feature Mask Definition 207
3.4 Link Manager Interoperability policy 208

4 Procedure Rules 209

4.1 Connection Control 209
4.1.1 Connection establishment 209
4.1.2 Detach 210
4.1.3 Power control 211
4.1.4 Adaptive frequency hopping 213
4.1.4.1 Master enables AFH 214
4.1.4.2 Master disables AFH 214
4.1.4.3 Master updates AFH 215
4.1.4.4 AFH operation in park, hold and sniff modes 215
4.1.5 Channel classification 216
4.1.5.1 Channel classification reporting enabling and disabling 217
4.1.6 Link supervision 218
4.1.7 Channel quality driven data rate change (CQDDR) 219
4.1.8 Quality of service (QoS) 220
4.1.8.1 Master notifies slave of the quality of service 220
4.1.8.2 Device requests new quality of service 221

4.1.9 Paging scheme parameters 222
4.1.9.1 Page mode 222
4.1.9.2 Page scan mode 222
4.1.10 Control of multi-slot packets 223
4.2 Security 224
4.2.1 Authentication 224
4.2.1.1 Claimant has link key 224
4.2.1.2 Claimant has no link key 225
4.2.1.3 Repeated attempts 225
4.2.2 Pairing 226
4.2.2.1 Responder accepts pairing 226
4.2.2.2 Responder has a fixed PIN 227
4.2.2.3 Responder rejects pairing 227
4.2.2.4 Creation of the link key 228
4.2.2.5 Repeated attempts 228
4.2.3 Change link key 229
4.2.4 Change current link key type 230
4.2.4.1 Change to a temporary link key 230
4.2.4.2 Make the semi-permanent link key the current link key 231
4.2.5 Encryption 232
4.2.5.1 Encryption mode 232
4.2.5.2 Encryption key size 233
4.2.5.3 Start encryption 234
4.2.5.4 Stop encryption 235
4.2.5.5 Change encryption mode, key or random number 235
4.2.6 Request supported encryption key size 236
4.3 Informational Requests 237
4.3.1 Timing accuracy 237
4.3.2 Clock offset 238
4.3.3 LMP version 238
4.3.4 Supported features 239
4.3.5 Name request 241
4.4 Role Switch 242
4.4.1 Slot offset 242
4.4.2 Role switch 243
4.5 Modes of Operation 245
4.5.1 Hold mode 245
4.5.1.1 Master forces hold mode 245
4.5.1.2 Slave forces hold mode 246
4.5.1.3 Master or slave requests hold mode 246

4.5.2 Park state 247
4.5.2.1 Master requests slave to enter park state 249
4.5.2.2 Slave requests to enter park state 250
4.5.2.3 Master sets up broadcast scan window 251
4.5.2.4 Master modifies beacon parameters.....252
4.5.2.5 Unparking slaves 252
4.5.3 Sniff mode 253
4.5.3.1 Master or slave requests sniff mode 254
4.5.3.2 Moving a slave from sniff mode to active mode.. 255
4.6 Logical Transports.....256
4.6.1 SCO logical transport 256
4.6.1.1 Master initiates an SCO link.....256
4.6.1.2 Slave initiates an SCO link.....257
4.6.1.3 Master requests change of SCO parameters258
4.6.1.4 Slave requests change of SCO parameters .258
4.6.1.5 Remove an SCO link 258
4.6.2 eSCO logical transport 259
4.6.2.1 Master initiates an eSCO link.....259
4.6.2.2 Slave initiates an eSCO link.....260
4.6.2.3 Master or slave requests change of eSCO parameters261
4.6.2.4 Remove an eSCO link 261
4.6.2.5 Rules for the LMP negotiation and renegotiation 262
4.6.2.6 Negotiation state definitions.....263
4.7 Test Mode 264
4.7.1 Activation and deactivation of test mode.....264
4.7.2 Control of test mode 265
4.7.3 Summary of test mode PDUs.....266
5 Summary 269
5.1 PDU Summary 269
5.2 Parameter Definitions 277
5.3 Default Values 284
6 List of Figures.....285
7 List of Tables 289

1 INTRODUCTION

The Link Manager Protocol (LMP) is used to control and negotiate all aspects of the operation of the Bluetooth connection between two devices. This includes the set-up and control of logical transports and logical links, and for control of physical links.

The Link Manager Protocol is used to communicate between the Link Managers (LM) on the two devices which are connected by the ACL logical transport. All LMP messages shall apply solely to the physical link and associated logical links and logical transports between the sending and receiving devices.

The protocol is made up of a series of messages which shall be transferred over the ACL-C logical link on the default ACL logical transport between two devices. LMP messages shall be interpreted and acted-upon by the LM and shall not be directly propagated to higher protocol layers.

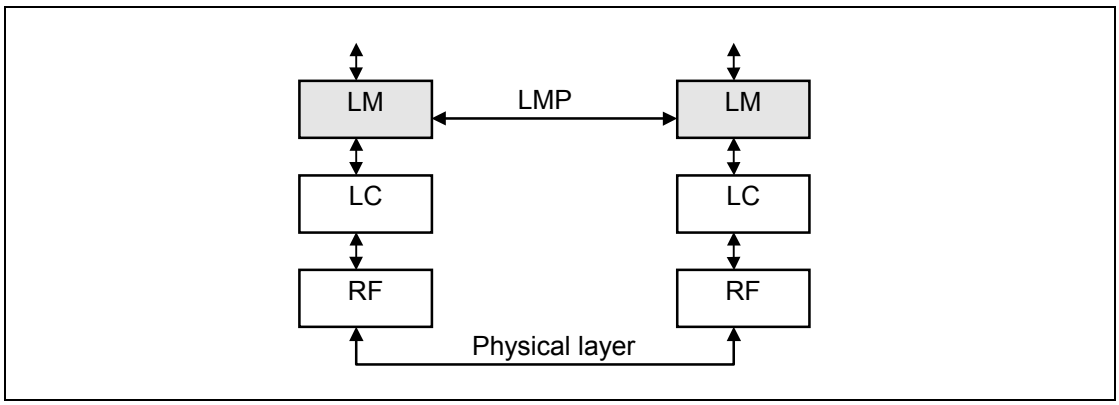

Figure 1.1: Link Manager Protocol signalling layer.

2 GENERAL RULES

2.1 MESSAGE TRANSPORT

LMP messages shall be exchanged over the ACL-C logical link that is carried on the default ACL logical transport (Baseband Specification, Section 4.4, on page 86). The ACL-C logical link is distinguished from the ACL-U (which carries L2CAP and user data) by the Logical Link Identifier (LLID) field carried in the payload header of variable-length packets (Baseband Specification, Section 6.6.2, on page 113).

The ACL-C has a higher priority than other traffic - see Baseband Specification, Section 5.6, on page 96.

The error detection and correction capabilities of the baseband ACL logical transport are generally sufficient for the requirements of the LMP. Therefore LMP messages do not contain any additional error detection information beyond what can be realized by means of sanity checks performed on the contents of LMP messages. Any such checks and protections to overcome undetected errors in LMP messages is an implementation matter.

2.2 SYNCHRONIZATION

This section is informative and explains why many of the LMP message sequences are defined as they are.

LMP messages are carried on the ACL-C logical link, which does not guarantee a time to deliver or acknowledge packets. LMP procedures take account of this when synchronizing state changes in the two devices. For example, criteria are defined that specify when a logical transport address (LT_ADDR) may be re-used after it becomes available due to a device leaving the piconet or entering the park state. Other LMP procedures, such as hold or role switch include the Bluetooth clock as a parameter in order to define a fixed synchronization point. The transitions into and out of sniff mode are protected with a transition mode.

The LC normally attempts to communicate with each slave no less often than every T_{poll} slots (see Section 4.1.8 on page 220) based on the T_{poll} for that slave.

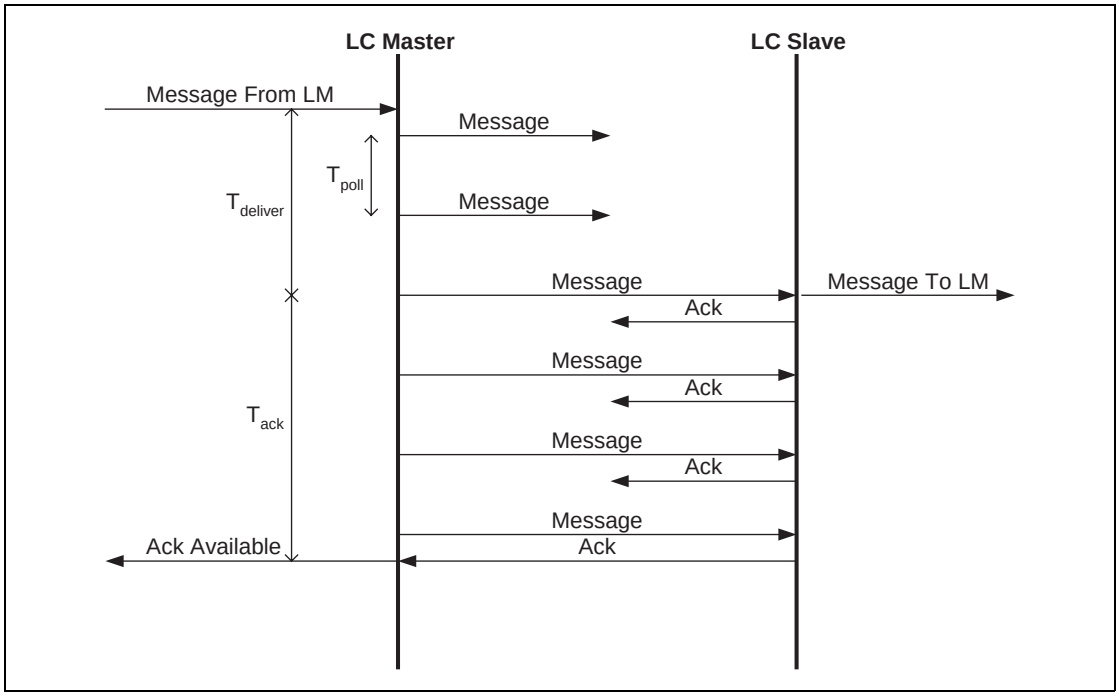

Figure 2.1: Transmission of a message from master to slave[1].

Figure 2.1 on page 198 illustrates the fundamental problem. It shows the transmission of a packet from the master to the slave in conditions of heavy interference for illustrative purposes. It is obvious that neither side can determine the value of either $T_{deliver}$ or T_{ack}. It is therefore not possible to use simple messages to identify uniquely the instant at which a state change occurs in the other device.

2.3 PACKET FORMAT

Each PDU is assigned either a 7 or a 15 bit opcode used to uniquely identify different types of PDUs, see Table 5.1 on page 269. The first 7 bits of the opcode and a transaction ID are located in the first byte of the payload body. If the initial 7 bits of the opcode have one of the special escape values 124-127 then an additional byte of opcode is located in the second byte of the payload and the combination uniquely identifies the PDU.

The FLOW bit in the packet header is always 1 and is ignored on reception.

If the PDU contains one or more parameters these are placed in the payload starting immediately after the opcode, i.e. at byte 2 if the PDU has a 7 bit opcode or byte 3 if the PDU has a 15 bit opcode. The number of bytes used

1. Note the diagram shows the limiting case where the master transmits the message at intervals of T_{poll}. In the case of heavy interference improved performance is gained by transmitting more often.

depends on the length of the parameters. All parameters have a little-endian format, i.e. the least significant byte is transferred first.

LMP messages shall be transmitted using DM1 packets, however if an HV1 SCO link is in use and the length of the payload is less than 9 bytes then DV packets may be used.

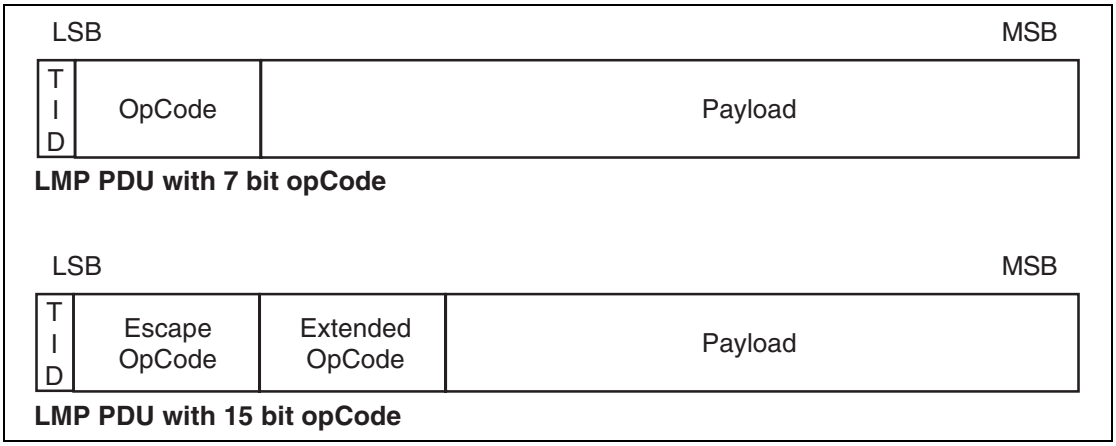

Figure 2.2: Payload body when LMP PDUs are sent.

2.4 TRANSACTIONS

The LMP operates in terms of transactions. A transaction is a connected set of message exchanges which achieve a particular purpose. All PDUs which form part of the same transaction shall have the same value for the transaction ID which is stored as part of the first byte of the opCode (see Section 2.3 on page 198).

The transaction ID is in the least significant bit. It shall be 0 if the PDU forms part of a transaction that was initiated by the master and 1 if the transaction was initiated by the slave.

Each sequence described in Section 4 on page 209 shall be defined as a transaction. For pairing, see Section 4.2.2 on page 226, and encryption, see Section 4.2.5 on page 232, all sequences belonging to each section shall be counted as one transaction and shall use the same transaction ID. For connection establishment, see Section 4.1.1 on page 209, LMP_host_connection_req and the response with LMP_accepted or LMP_not_accepted shall form one transaction and have the transaction ID of 0. LMP_setup_complete is a stand-alone PDU, which forms a transaction by itself.

For error handling, see Section 2.5 on page 200, the PDU to be rejected and LMP_not_accepted or LMP_not_accepted_ext shall form a single transaction.

2.4.1 LMP Response Timeout

The time between receiving a baseband packet carrying an LMP PDU and sending a baseband packet carrying a valid response PDU, according to the procedure rules in Section 4 on page 209, shall be less than the LMP Response Timeout. The value of this timeout is 30 seconds. Note that the LMP Response Timeout is applied not only to sequences described in Section 4 on page 209, but also to the series of the sequences defined as the transactions in Section 4 on page 209. It shall also be applied to the series of LMP transactions that take place during a period when traffic on the ACL-U logical link is disabled for the duration of the series of LMP transactions, for example during the enabling of encryption.

The LMP Response Timeout shall restart each time an LMP PDU which requires a reply is queued for transmission by the baseband.

2.5 ERROR HANDLING

If the LM receives a PDU with unrecognized opcode, it shall respond with LMP_not_accepted or LMP_not_accepted_ext with the error code *unknown LMP PDU.* The opcode parameter that is echoed back is the unrecognized opcode.

If the LM receives a PDU with invalid parameters, it shall respond with LMP_not_accepted or LMP_not_accepted_ext with the error code *invalid LMP parameters*.

If the maximum response time, see Section 2.4 on page 199, is exceeded or if a link loss is detected (see Baseband Specification, Section 3.1, on page 83), the party that waits for the response shall conclude that the procedure has terminated unsuccessfully.

Erroneous LMP messages can be caused by errors on the channel or systematic errors at the transmit side. To detect the latter case, the LM should monitor the number of erroneous messages and disconnect if it exceeds a threshold, which is implementation-dependent.

When the LM receives a PDU that is not allowed, and the PDU normally expects a PDU reply, for example LMP_host_connection_req or LMP_unit_key, the LM shall return PDU LMP_not_accepted or LMP_not_accepted_ext with the error code *PDU not allowed*. If the PDU normally doesn't expect a reply, for example LMP_sres or LMP_temp_key, the PDU will be ignored.

The reception of an optional PDU which is not supported shall be handled in one of two ways: if the LM simply does not know the opcode (e.g. it was added at a later version of the specification) it shall respond with LMP_not_accepted or LMP_not_accepted_ext with the error code *unknown LMP PDU*. If the LM recognises the PDU as optional but unsupported then it shall reply with LMP_not_accepted or LMP_not_accepted_ext with the error code *unsupported LMP feature* if the PDU would normally generate a reply otherwise no reply is generated.

2.5.1 Transaction collision resolution

Since LMP PDUs are not interpreted in real time, collision situations can occur where both LMs initiate the same procedure and both cannot be completed. In this situation, the master shall reject the slave-initiated procedure by sending LMP_not_accepted or LMP_not_accepted_ext with the error code *LMP error transaction collision*. The master-initiated procedure shall then be completed.

Collision situations can also occur where both LMs initiate different procedures and both cannot be completed. In this situation, the master shall reject the slave-initiated procedure by sending LMP_not_accepted or LMP_not_accepted_ext with the error code *LMP error different transaction collision*. The master- initiated procedure shall then be completed.

2.6 PROCEDURE RULES

Each procedure is described and depicted with a sequence diagram. The following symbols are used in the sequence diagrams:

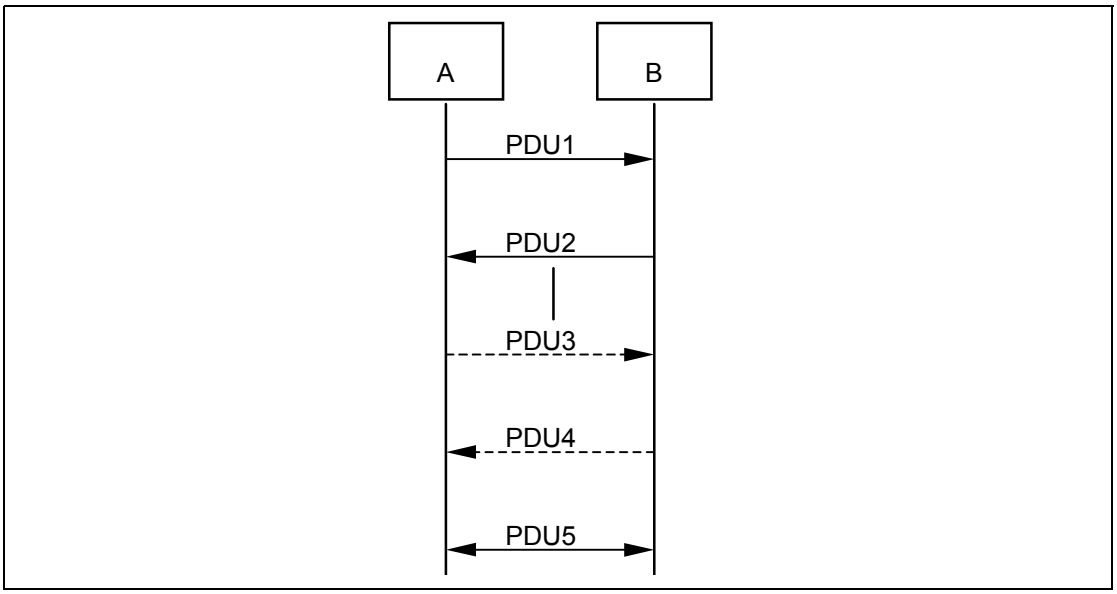

Figure 2.3: Symbols used in sequence diagrams.

PDU1 is a PDU sent from A to B. PDU2 is a PDU sent from B to A. PDU3 is a PDU that is optionally sent from A to B. PDU4 is a PDU that is optionally sent from B to A. PDU5 is a PDU sent from either A or B. A vertical line indicates that more PDUs can optionally be sent.

2.7 GENERAL RESPONSE MESSAGES

The PDUs LMP_accepted, LMP_accepted_ext, LMP_not_accepted and LMP_not_accepted_ext are used as response messages to other PDUs in a number of different procedures. LMP_accepted or LMP_accepted_ext includes the opcode of the message which is accepted. LMP_not_accepted or LMP_not_accepted_ext includes the opcode of the message which is not accepted and the error code why it is not accepted.

LMP_accepted_ext and LMP_not_accepted_ext shall be used when the opcode is 15 bits in length. LMP_accepted and LMP_not_accepted shall be used when the opcode is 7 bits in length.

M/O	PDU	Contents
M	LMP_accepted	op code
M	LMP_not_accepted	op code error code
O	LMP_accepted_ext	escape op code extended op code
O	LMP_not_accepted_ext	escape op code extended op code error code

Table 2.1: General response messages.

2.8 LMP MESSAGE CONSTRAINTS

This section is informative.

- No LMP message shall exceed the maximum payload length of a single DM1 packet i.e. 17 bytes in length (Baseband Specification, Section 6.5.4.1, on page 111).
- All LM messages are of fixed length apart from those sent using broadcast in park state.
- The LMP version number shall not be used to indicate the presence or absence of functionality.

3 DEVICE FEATURES

3.1 GENERAL DESCRIPTION

Each PDU is either Mandatory or Optional as defined by the M/O field in the tables of Section 4 on page 209. An M in this field shall indicate that support for the feature is mandatory. An O in this field shall indicate that support for the PDU is optional and it shall be followed by the number(s) of the feature(s) involved in brackets.

All features added after the 1.1 specification have associated LMP feature bits. Support of these features may be made “mandatory” by the qualification process but the LM still considers them to be optional since it must interoperate with older devices which do not support them.

The LM does not need to be able to transmit a PDU which is optional. Support of optional PDUs is indicated by a device's features mask. The features mask can be read (see Section 4.3.4 on page 239). An LM shall not send or be sent any PDU which is incompatible with the features signalled in its or its peer's features mask, as detailed in Section 3.2 .

3.2 FEATURE DEFINITIONS

Feature	Definition
Extended features	This feature indicates whether the device is able to support the extended features mask using the LMP sequences defined in Section 4.3.4 on page 239.
Timing accuracy	This feature indicates whether the LM supports requests for timing accuracy using the sequence defined in Section 4.3.1 on page 237.
Enhanced inquiry scan	This feature indicates whether the device is capable of supporting the enhanced inquiry scan mechanism as defined in Baseband Specification, Section 8.4.1, on page 144. The presence of this feature has only local meaning and does not imply support for any additional LMP PDUs or sequences.
Interlaced inquiry scan	This feature indicates whether the device is capable of supporting the interlaced inquiry scan mechanism as defined in Baseband Specification, Section 8.4.1, on page 144. The presence of this feature has only local meaning and does not imply support for any additional LMP PDUs or sequences.
Interlaced page scan	This feature indicates whether the device is capable of supporting the interlaced page scan mechanism as defined in Baseband Specification, Section 8.3.1, on page 134. The presence of this feature has only local meaning and does not imply support for any additional LMP PDUs or sequences.

Table 3.1: Feature definitions.

Feature	Definition
RSSI with inquiry results	This feature indicates whether the device is capable of reporting the RSSI with inquiry results as defined in Baseband Specification, Section 8.4.2, on page 145. The presence of this feature has only local meaning and does not imply support for any additional LMP PDUs or sequences.
Paging parameter negotiation	This feature indicates whether the LM is capable of supporting the signaling of changes in the paging scheme as defined in Section 4.1.9 on page 222.
3 slot packets	This feature indicates whether the device supports the transmission and reception of both DM3 and DH3 packets for the transport of traffic on the ACL-U logical link.
5 slot packets	This feature indicates whether the device supports the transmission and reception of both DM5 and DH5 packets for the transport of traffic on the ACL-U logical link.
Flow control lag	This is defined as the total amount of ACL-U data that can be sent following the receipt of a valid payload header with the payload header flow bit set to 0 and is in units of 256 bytes. See further in Baseband Specification, Section 6.6.2, on page 113.
AFH capable slave	This feature indicates whether the device is able to support the Adaptive Frequency Hopping mechanism as a slave as defined in Baseband Specification, Section 2.3, on page 63 using the LMP sequences defined in Section 4.1.4 on page 213.
AFH classification slave	This feature indicates whether the device is able to support the AFH classification mechanism as a slave as defined in Baseband Specification, Section 8.6.8, on page 161 using the LMP sequences defined Section 4.1.5 on page 216.
AFH capable master	This indicates whether the device is able to support the Adaptive Frequency Hopping mechanism as a master as defined in Baseband Specification, Section 2.3, on page 63 using the LMP sequences defined in Section 4.1.4 on page 213.
AFH classification master	This feature indicate whether the device is able to support the AFH classification mechanism as a master as defined in Baseband Specification, Section 8.6.8, on page 161 using the LMP sequences defined Section 4.1.5 on page 216.
Power control	This feature indicates whether the device is capable of adjusting its transmission power. This feature indicates the ability to receive the LMP_incr_power and LMP_decr_power PDUs and transmit the LMP_max_power and LMP_min_power PDUs, using the sequences defined in Section 4.1.3 on page 211. These sequences may be used even if the remote device does not support the power control feature, as long as it supports the Power control requests feature.

Table 3.1: Feature definitions.

Feature	Definition
Power control requests	This feature indicates whether the device is capable of determining if the transmit power level of the other device should be adjusted and will send the LMP_incr_power and LMP_decr_power PDUs to request the adjustments. It indicates the ability to receive the LMP_max_power and LMP_min_power PDUs, using the sequences in Section 4.1.3 on page 211. These sequences may be used even if the remote device does not support the RSSI feature, as long as it supports the power control feature.
Channel Quality Driven Data Rate	This feature indicates whether the LM is capable of recommending a packet type (or types) depending on the channel quality using the LMP sequences defined in section Section 4.1.7 on page 219.
Broadcast encryption	This feature indicates whether the device is capable of supporting broadcast encryption as defined in [Part H] Section 4.2 on page 764 and also the sequences defined in Section 4.2.6 on page 236 and Section 4.2.4 on page 230. Note: Devices compliant to versions of this specification 1.1 and earlier may support broadcast encryption even though this feature bit is not set.
Encryption	This feature indicates whether the device supports the encryption of packet contents using the sequence defined in Section 4.2.5 on page 232.
Slot offset	This feature indicates whether the LM supports the transfer of the slot offset using the sequence defined in Section 4.4.1 on page 242.
Role switch	This feature indicates whether the device supports the change of master and slave roles as defined by baseband Section 8.6.5 on page 155 using the sequence defined in Section 4.4.2 on page 243.
Hold mode	This feature indicates whether the device is able to support Hold mode as defined in baseband Section 8.8 on page 165 using the LMP sequences defined in Section 4.5.1 on page 245.
Sniff mode	This feature indicates whether the device is able to support Sniff mode as defined in baseband Section 8.7 on page 163 using the LMP sequences defined in Section 4.5.3 on page 253.
Park state	This feature indicates whether the device is able to support Park state as defined in baseband Section 8.9 on page 165 using the LMP sequences defined in Section 4.5.2 on page 247.
SCO link	This feature shall indicate whether the device is able to support the SCO logical transport as defined in Baseband Specification, Section 4.3, on page 86, the HV1 packet defined in Baseband Specification, Section 6.5.2.1, on page 109 and receiving the DV packet defined in Baseband Specification, Section 6.5.2.4, on page 109 using the LMP sequence in Section 4.6.1 on page 256.
HV2 packets	This feature indicates whether the device is capable of supporting the HV2 packet type as defined in baseband Section 6.5.2.2 on page 109 on the SCO logical transport.

Table 3.1: Feature definitions.

Feature	Definition
HV3 packets	This feature indicates whether the device is capable of supporting the HV3 packet type as defined in baseband Section 6.5.2.3 on page 109 on the SCO logical transport.
µ-law log synchronous data	This feature indicates whether the device is capable of supporting µ-Law Log format data as defined in Baseband Specification, Section 9.1, on page 173 on the SCO and eSCO logical transports.
A-law log synchronous data	This feature indicates whether the device is capable of supporting A-Law Log format data as defined in Baseband Specification, Section 9.1, on page 173 on the SCO and eSCO logical transports.
CVSD synchronous data	This feature indicates whether the device is capable of supporting CVSD format data as defined in Baseband Specification, Section 9.2, on page 173 on the SCO and eSCO logical transports.
Transparent synchronous data	This feature indicates whether the device is capable of supporting transparent synchronous data as defined in Baseband Specification, Section 6.4.3, on page 104 on the SCO and eSCO logical transports.
Extended SCO link	This feature indicates whether the device is able to support the eSCO logical transport as defined Baseband Specification, Section 5.5, on page 96 and the EV3 packet defined in Baseband Specification, Section 6.5.3.1, on page 110 using the LMP sequences defined in Section 4.6.2 on page 259.
EV4 packets	This feature indicates whether the device is capable of supporting the EV4 packet type defined in Baseband Specification, Section 6.5.3.2, on page 110 on the eSCO logical transport.
EV5 packets	This feature indicates whether the device is capable of supporting the EV5 packet type defined in Baseband Specification, Section 6.5.3.3, on page 110 on the eSCO logical transport.

Table 3.1: Feature definitions.

3.3 FEATURE MASK DEFINITION

The features are represented as a bit mask when they are transferred in LMP messages. For each feature a single bit is specified which shall be set to 1 if the feature is supported and set to 0 otherwise. The single exception is the flow control lag which is coded as a 3 bit field with the least significant bit in byte 2 bit 4 and the most significant bit in byte 2 bit 6. All unknown or unassigned feature bits shall be set to 0.

No.	Supported feature	Byte	Bit
0	3 slot packets	0	0
1	5 slot packets	0	1
2	Encryption	0	2
3	Slot offset	0	3
4	Timing accuracy	0	4
5	Role switch	0	5
6	Hold mode	0	6
7	Sniff mode	0	7
8	Park state	1	0
9	Power control requests	1	1
10	Channel quality driven data rate (CQDDR)	1	2
11	SCO link	1	3
12	HV2 packets	1	4
13	HV3 packets	1	5
14	µ-law log synchronous data	1	6
15	A-law log synchronous data	1	7
16	CVSD synchronous data	2	0
17	Paging parameter negotiation	2	1
18	Power control	2	2
19	Transparent synchronous data	2	3
20	Flow control lag(least significant bit)	2	4
21	Flow control lag(middle bit)	2	5
22	Flow control lag(most significant bit)	2	6
23	Broadcast encryption	2	7
24	Reserved	3	0

Table 3.2: Feature mask definition

No.	Supported feature	Byte	Bit
25	Reserved	3	1
26	Reserved	3	2
27	Enhanced inquiry scan	3	3
28	Interlaced inquiry scan	3	4
29	Interlaced page scan	3	5
30	RSSI with inquiry results	3	6
31	Extended SCO link (EV3 packets)	3	7
32	EV4 packets	4	0
33	EV5 packets	4	1
34	Reserved	4	2
35	AFH capable slave	4	3
36	AFH classification slave	4	4
37	Reserved	4	5
38	Reserved	4	6
43	AFH capable master	5	3
44	AFH classification master	5	4
63	Extended features	7	7

Table 3.2: Feature mask definition

3.4 LINK MANAGER INTEROPERABILITY POLICY

Link managers of any version will interoperate using the lowest common subset of functionality by reading the LMP features mask (defined in Table 3.2 on page 207).

An optional LMP PDU shall only be sent to a device if the corresponding feature bit is set in its feature mask. The exception to this are certain PDUs (see Section 4.1.1 on page 209) which can be sent before the features mask is requested. Note: a later version device with a restricted feature set is indistinguishable from an earlier version device with the same features.

4 PROCEDURE RULES

4.1 CONNECTION CONTROL

4.1.1 Connection establishment

After the paging procedure, LMP procedures with for clock offset request, LMP version, supported features, name request and detach may then be initiated.

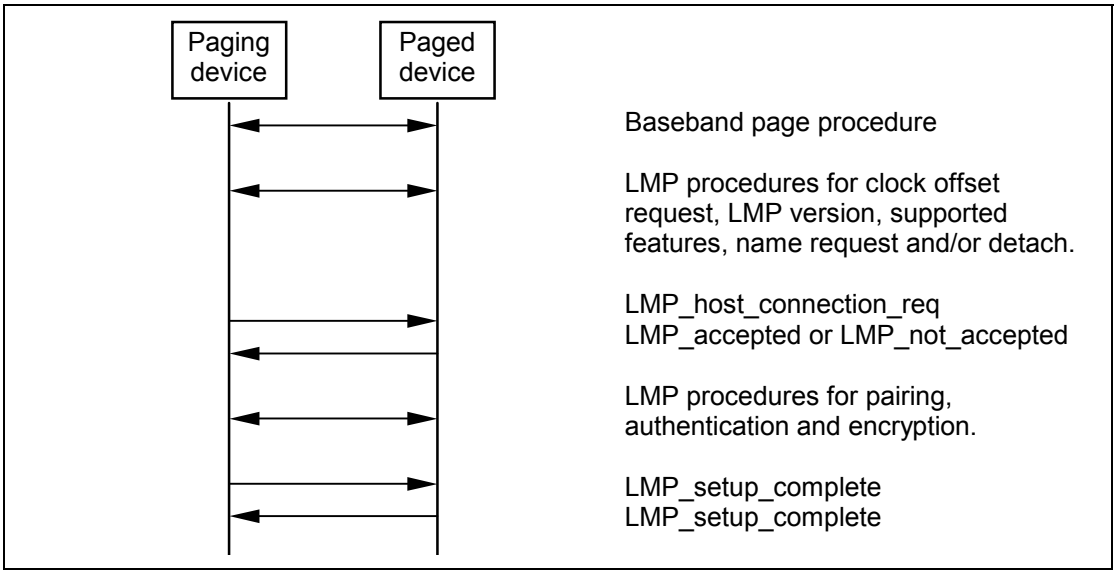

Figure 4.1: Connection establishment.

When the paging device wishes to create a connection involving layers above LM, it sends an LMP_host_connection_req PDU. When the other side receives this message, the host is informed about the incoming connection. The remote device can accept or reject the connection request by sending an LMP_accepted PDU or an LMP_not_accepted PDU. Alternatively, if the slave needs a role switch, see Section 4.4.2 on page 243, it sends an LMP_slot_offset PDU and LMP_switch_req PDU after it has received an LMP_host_connection_req PDU. If the role switch fails the LM shall continue with the creation of the connection unless this cannot be supported due to limited resources in which case the connection shall be terminated with an LMP_detach PDU with error code *other end terminated connection: low resources*. When the role switch has been successfully completed, the old slave will reply with an LMP_accepted PDU or an LMP_not_accepted PDU to the LMP_host_connection_req PDU (with the transaction ID set to 0).

If the paging device receives an LMP_not_accepted PDU in response to LMP_host_connection_req it shall immediately disconnect the link using the mechanism described in Section 4.1.2 on page 210.

If the LMP_host_connection_req PDU is accepted, LMP security procedures (pairing, authentication and encryption) may be invoked. When a device is not going to initiate any more security procedures during connection establishment it sends an LMP_setup_complete PDU. When both devices have sent LMP_setup_complete PDUs the traffic can be transferred on the ACL-U logical transport.

M/O	PDU	Contents
M	LMP_host_connection_req	-
M	LMP_setup_complete	-

Table 4.1: PDUs used for connection establishment.

4.1.2 Detach

The connection between two Bluetooth devices may be detached anytime by the master or the slave. An error code parameter is included in the message to inform the other party of why the connection is detached.

M/O	PDU	Contents
M	LMP_detach	error code

Table 4.2: PDU used for detach.

The initiating LM shall pause traffic on the ACL-U logical link (see Baseband Specification, Section 5.3.1, on page 96). The initiating LM then queues the LMP_detach for transmission and it shall start a timer for $6*T_{poll}$ slots where T_{poll} is the poll interval for the connection. If the initiating LM receives the baseband acknowledgement before the timer expires it starts a timer for $3*T_{poll}$ slots. When this timer expires, and if the initiating LM is the master, the LT_ADDR(s) may be re-used immediately. If the initial timer expires then the initiating LM drops the link and starts a timer for $T_{linksupervisiontimeout}$ slots after which the LT_ADDR(s) may be re-used if the initiating LM is the master.

When the receiving LM receives the LMP_detach, it shall start a timer for $6*T_{poll}$ slots if it is the master and $3*T_{poll}$ if it is the slave. On timer expiration, the link shall be detached and, if the receiving LM is the master, the LT_ADDR(s) may be re-used immediately. If the receiver never receives the LMP_detach then a link supervision timeout will occur, the link will be detached, and the LT_ADDR may be re-used immediately.

If at any time during this or any other LMP sequence the Link supervision timeout expires then the link shall be terminated immediately and the LT_ADDR(S) may be re-used immediately.

If the connection is in hold mode, the initiating LM shall wait for hold mode to end before initiating the procedure defined above. If the connection is in sniff mode or park state, the initiating LM shall perform the procedure to exit sniff

mode or park state before initiating the procedure defined above. If the procedure to exit sniff mode or park state does not complete within the LMP response timeout (30 seconds) the procedure defined above shall be initiated anyway.

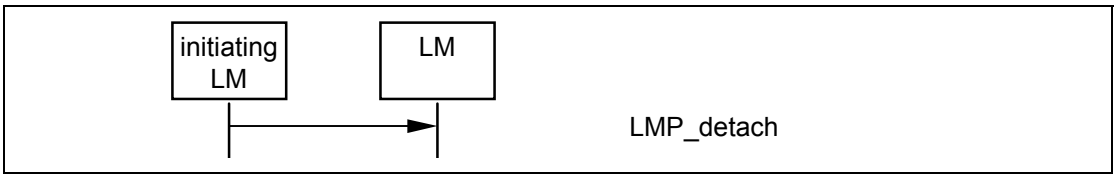

Sequence 1: Connection closed by sending LMP_detach.

4.1.3 Power control

If the received signal characteristics differs too much from the preferred value of a Bluetooth device, it may request an increase or a decrease of the other device's TX power. The power adjustment requests may be made at anytime following a successful baseband paging procedure.

If a device does not support power control requests this is indicated in the supported features list and thus no power control requests shall be sent after the supported features response has been processed. Prior to this time, a power control adjustment might be sent and if the recipient does not support power control it is allowed to send LMP_max_power in response to LMP_incr_power_req and LMP_min_power in response to LMP_decr_power_req. Another possibility is to send LMP_not_accepted with the error code *unsupported LMP feature*.

Upon receipt of an LMP_incr_power_req PDU or LMP_decr_power_req PDU the output power shall be increased or decreased one step. See Radio Specification Section 3, on page 33 for the definition of the step size. The TX power is a property of the physical link, and affects all logical transports carried over the physical link. Power control requests carried over the default ACL-C logical link shall only affect the physical link associated with the default ACL-C logical link: they shall not affect the power level used on the physical links to other slaves.

M/O	PDU	Contents
O(9)	LMP_incr_power_req	for future use (1 Byte)
O(9)	LMP_decr_power_req	for future use (1 Byte)
O(18)	LMP_max_power	-
O(18)	LMP_min_power	-

Table 4.3: PDUs used for power control.

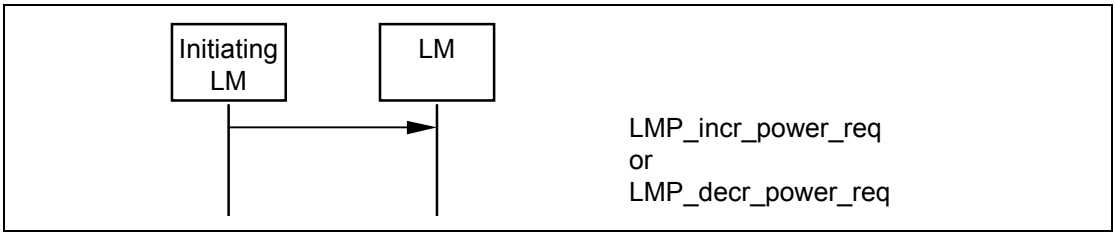

Sequence 2: A device requests a change of the other device's TX power.

If the receiver of LMP_incr_power_req is at maximum power LMP_max_power shall be returned. The device shall only request an increase again after having requested a decrease at least once. If the receiver of LMP_decr_power_req is at minimum power then LMP_min_power shall be returned and the device shall only request a decrease after having requested an increase at least once.

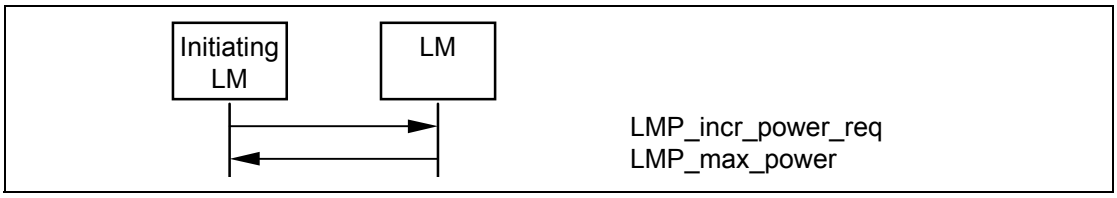

Sequence 3: The TX power cannot be increased.

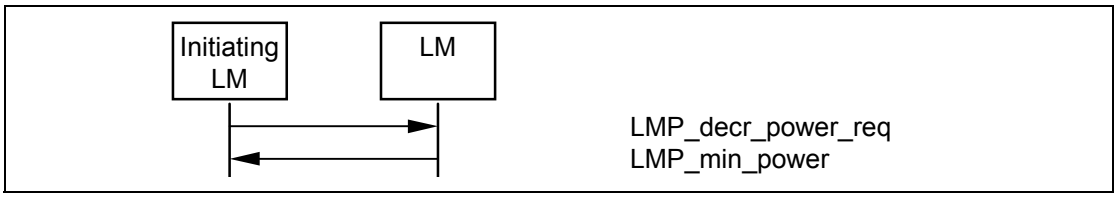

Sequence 4: The TX power cannot be decreased.

One byte is reserved in LMP_incr/decr_power_req for future use. The parameter value shall be 0x00 and ignored upon receipt.

4.1.4 Adaptive frequency hopping

AFH is used to improve the performance of physical links in the presence of interference as well as reducing the interference caused by physical links on other devices in the ISM band. AFH shall only be used during the connection state.

M/O	PDU	Contents
O(35) Rx O(43) Tx	LMP_set_AFH	AFH_Instant, AFH_Mode, AFH_Channel_Map

Table 4.4: PDUs used for AFH

The LMP_set_AFH PDU contains three parameters: AFH_Instant, AFH_Mode, and AFH_Channel_Map. The parameter, AFH_Instant, specifies the instant at which the hopset switch will become effective. This is specified as a Bluetooth Clock value of the master's clock, that is available to both devices. The AFH instant is chosen by the master and shall be an even value at least $6*T_{poll}$ or 96 slots (whichever is greater) in the future, where T_{poll} is at least the longest poll interval for all AFH enabled physical links. The AFH_instant shall be within 12 hours of the current clock value. The parameter AFH_Mode, specifies whether AFH shall be enabled or disabled. The parameter AFH_Channel_Map, specifies the set of channels that shall be used if AFH is enabled.

When the LMP_set_AFH PDU is received the AFH instant shall be compared with the current Bluetooth clock value. If it is in the past then the AFH_instant has passed and the slave shall immediately configure the hop selection kernel (see Baseband Specification, Section 2.6.3, on page 77) with the new AFH_mode and AFH_channel_map specified in the LMP_set_AFH PDU. If it is in the future then a timer shall be started to expire at the AFH instant. When this timer expires it shall configure the hop selection kernel with the new AFH_mode and AFH_channel_map.

The master shall not send a new LMP_set_AFH PDU to a slave until it has received the baseband acknowledgement for any previous LMP_set_AFH addressed to that slave and the instant has passed.

Role switch while AFH is enabled shall follow the procedures define by Baseband Specification, Section 8.6.5, on page 155.

4.1.4.1 Master enables AFH

Prior to enabling AFH the master LM shall pause traffic on the ACL-U logical link (see Baseband Specification, Section 5.3.1, on page 96). The master shall then enable AFH on a physical link by sending the LMP_set_AFH PDU with AFH_mode set to AFH_enabled, the AFH_channel_map parameter containing the set of used and unused channels, and an AFH_instant. The LM shall not calculate the AFH instant until after traffic on the ACL-U logical link has been stopped. The master considers the physical link to be AFH_enabled once the baseband acknowledgement has been received and the AFH_instant has passed. Once the baseband acknowledgement has been received the master shall restart transmission on the ACL-U logical link.

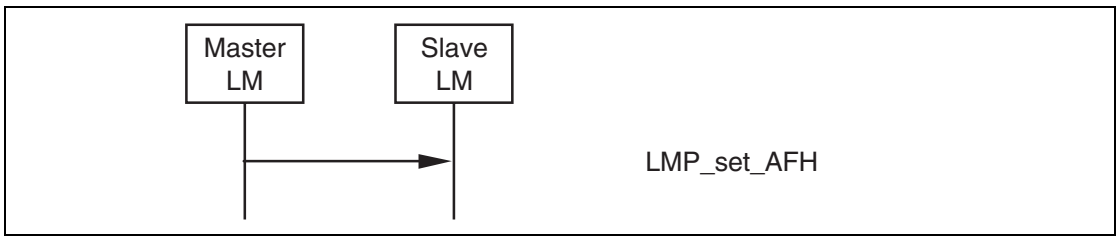

Sequence 5: Master Enables AFH.

4.1.4.2 Master disables AFH

Prior to disabling AFH the master LM shall pause traffic on the ACL-U logical link (Baseband Specification, Section 5.3.1, on page 96). The master shall then disable AFH operation on a physical link by sending the LMP_set_AFH PDU with AFH_mode set to AFH_disabled and an AFH_instant. The AFH_channel_map parameter is not valid when AFH_mode is AFH_disabled. The LM shall not calculate the AFH instant until after traffic on the ACL-U logical link has been stopped. The master considers the physical link to have entered AFH_disabled operation once the baseband acknowledgement has been received and the AFH_instant has passed. Once the baseband acknowledgement has been received the master shall restart transmission on the ACL-U logical link.

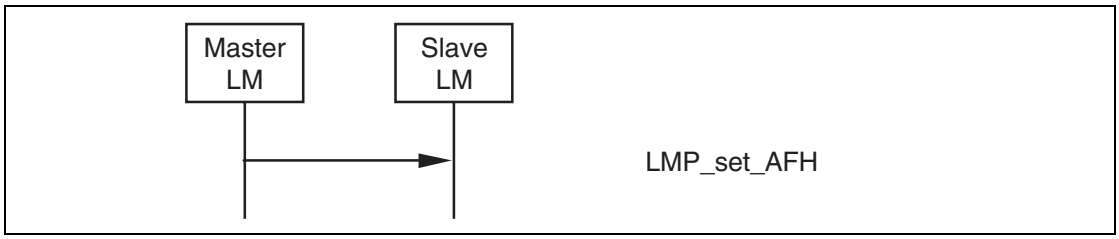

Sequence 6: Master disables AFH.

4.1.4.3 Master updates AFH

A master shall update the AFH parameters on a physical link by sending the LMP_set_AFH PDU with AFH_mode set to AFH_enabled, an AFH_instant and a new AFH_channel_map. The master shall consider the slave to have the updated AFH parameters once the baseband acknowledgement has been received and the AFH_instant has passed.

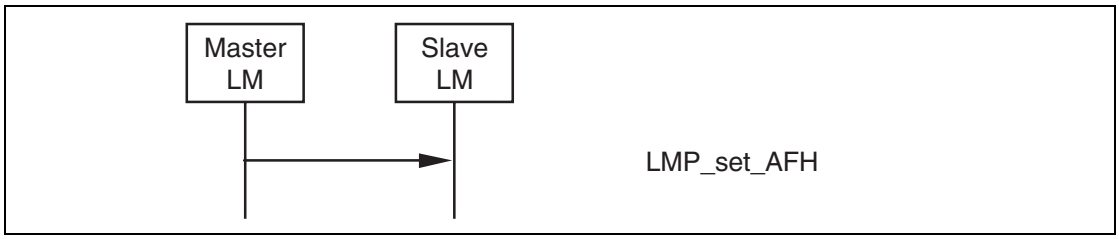

Sequence 7: Master Updates AFH.

4.1.4.4 AFH operation in park, hold and sniff modes

A slave in Park, Hold or Sniff shall retain the AFH_mode and AFH_channel_map prior to entering those modes. A master may change the AFH_mode while a slave is in Sniff.

A master that receives a request from an AFH_enabled slave to enter Park, Hold or Sniff and decides to operate the slave using a different hop sequence shall respond with an LMP_set_AFH PDU specifying the new hop sequence.

The master continues with the LMP signalling, for Park, Hold or Sniff initiation, once the baseband acknowledgement for the LMP_set_AFH PDU has been received. Optionally, the master may delay the continuation of this LMP signalling until after the instant. An AFH_capable_slave device shall support both of these cases.

A master that receives a request from an AFH_enabled slave to enter Park, Hold or Sniff and decides not to change the slave's hop sequence shall respond exactly as it would do without AFH. In this case, AFH operation has no effect on the LMP signalling.

4.1.5 Channel classification

A master may request channel classification information from a slave that is AFH_enabled.

A slave that supports the AFH_classification_slave feature shall perform channel classification and reporting according to its AFH_reporting_mode. The master shall control the AFH_reporting_mode using the LMP_channel_classification_req PDU. The slave shall report its channel classification using the LMP_channel_classification PDU.

The slave shall report pairs of channels as *good*, *bad* or *unknown*. See Table 5.2 on page 277 for the detailed format of the AFH_Channel_Classification parameter. When one channel in the nth channel pair is good and the other channel is unknown the nth channel pair shall be reported as good. When one channel in the nth channel pair is bad and the other is unknown the nth channel pair shall be reported as bad. It is implementation dependent what to report when one channel in a channel pair is good and the other is bad.

M/O	PDU	Contents
O(36) Rx O(44) Tx	LMP_channel_classification_req	AFH_Reporting_Mode, AFH_Min_Interval, AFH_Max_Interval
O(36) Tx O(44) Rx	LMP_channel_classification	AFH_Channel_Classification

Table 4.5: PDUs used for Channel Classification Reporting.

The LMP_channel_classification_req PDU contains three parameters: AFH_Reporting_Mode, AFH_Min_Interval, and AFH_Max_Interval. In the AFH_reporting_disabled state, the slave shall not generate any channel classification reports. The parameter AFH_min_interval, defines the minimum amount of time from the last LMP_channel_classification command that was sent before the next LMP_channel_classification PDU may be sent. The parameter AFH_max_interval, defines the maximum amount of time between the change in the radio environment being detected by a slave and its generation of an LMP_channel_classification PDU. The AFH_max_interval shall be equal to or larger than AFH_min_interval.

The AFH_reporting_mode parameter shall determine if the slave is in the AFH_reporting_enabled or AFH_reporting_disabled state. The default state, prior to receipt of any LMP_channel_classification_req PDUs, shall be AFH_reporting_disabled.

AFH_reporting_mode is implicitly set to the AFH_reporting_disabled state when any of the following occur:

- Establishment of a connection at the baseband level
- Master-slave role switch

- Entry to park state operation
- Entry to hold mode operation

AFH_reporting_mode is implicitly restored to its former value when any of the following occur:

- Exit from park state operation
- Exit from hold mode
- Failure of Master-slave role switch

4.1.5.1 Channel classification reporting enabling and disabling

A master enables slave channel classification reporting by sending the LMP_channel_classification_req PDU with the AFH_reporting_mode parameter set to AFH_reporting_enabled.

When a slave has had classification reporting enabled by the master it shall send the LMP_channel_classification PDU according to the information in the latest LMP_channel_classification_req PDU. The LMP_channel_classification PDU shall not be sent if there has been no change in the slave's channel classification.

A master disables slave channel classification reporting by sending the LMP_channel_classification_req PDU with the AFH_reporting_mode parameter set to AFH_reporting_disabled.

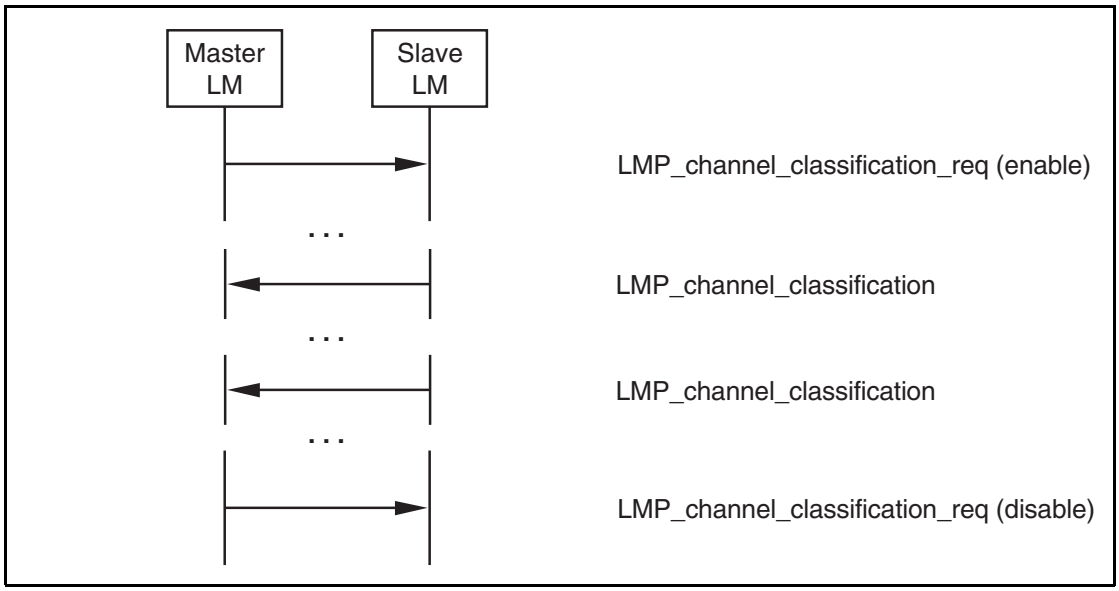

Sequence 8: Channel classification reporting.

4.1.6 Link supervision

Each physical link has a timer that is used for link supervision. This timer is used to detect physical link loss caused by devices moving out of range, or being blocked by interference, a device's power-down, or other similar failure cases. Link supervision is specified in Baseband Specification, Section 3.1, on page 83.

M/O	PDU	Contents
M	LMP_supervision_timeout	supervision timeout

Table 4.6: PDU used to set the supervision timeout.

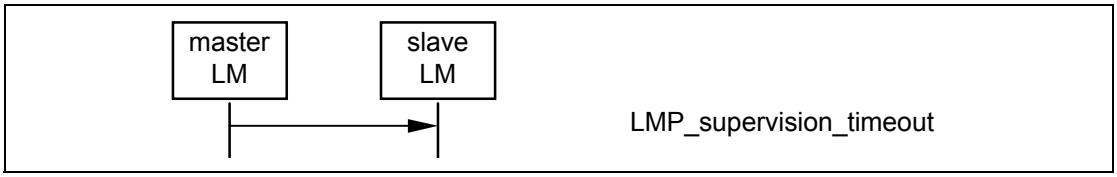

Sequence 9: Setting the link supervision timeout.

4.1.7 Channel quality driven data rate change (CQDDR)

The data throughput for a given packet type depends on the quality of the RF channel. Quality measurements in the receiver of one device can be used to dynamically control the packet type transmitted from the remote device for optimization of the data throughput. Device A sends the LMP_auto_rate PDU once to notify device B to enable this feature. Once enabled, device B may change the packet type(s) that A transmits by sending the LMP_preferred_rate PDU. This PDU has a parameter which determines the preferred coding (with or without 2/3FEC) and optionally the preferred size in slots of the packets. Device A is not required to change to the packet type specified by this parameter. Device A shall not send a packet that is larger than max slots (see Section 4.1.10 on page 223) even if the preferred size is greater than this value.

These PDUs may be sent at any time after connection setup is completed.

M/O	PDU	Contents
O(10)	LMP_auto_rate	-
O(10)	LMP_preferred_rate	data rate

Table 4.7: PDUs used for quality driven change of the data rate.

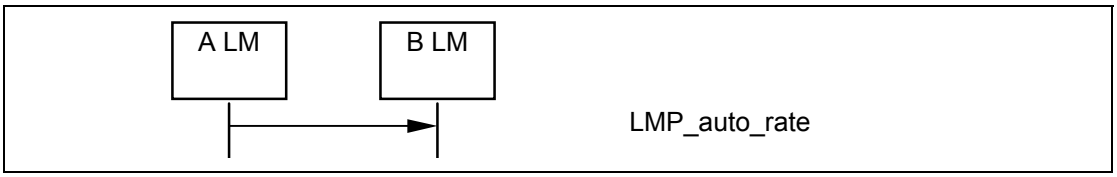

Sequence 10: A notifies B to enable CQDDR

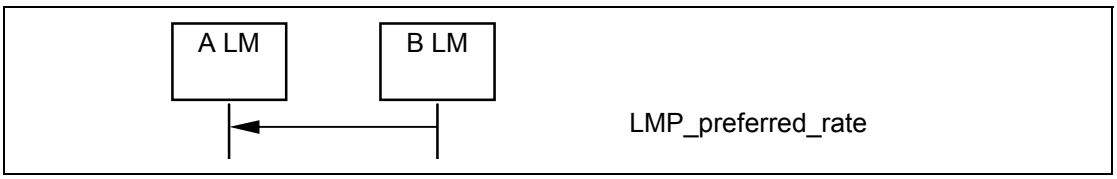

Sequence 11: B sends A a preferred packet type

4.1.8 Quality of service (QoS)

The LM provides QoS capabilities. A poll interval, T_{poll}, that is defined as the-maximum time between transmissions from the master to a particular slave on the ACL logical transport, is used to support bandwidth allocation and latency control - see Baseband Specification, Section 8.6.1, on page 150 for details. The poll interval is guaranteed in the active and sniff modes except when there are collisions with page, page scan, inquiry and inquiry scan, during time critical LMP sequences in the current piconet and any other piconets in which the Bluetooth device is a member, and during critical baseband sequences (such as the page response, initial connection state until the first POLL, and master slave switch). These PDUs maybe sent at anytime after connection setup is completed.

Master and slave negotiate the number of repetitions for broadcast packets (N_{BC}), see Baseband Specification, Section 7.6.5, on page 130.

M/O	PDU	Contents
M	LMP_quality_of_service	poll interval N_{BC}
M	LMP_quality_of_service_req	poll interval N_{BC}

Table 4.8: PDUs used for quality of service.

4.1.8.1 Master notifies slave of the quality of service

The master notifies the slave of the new poll interval and N_{BC} by sending the LMP_quality_of_service PDU. The slave cannot reject the notification.

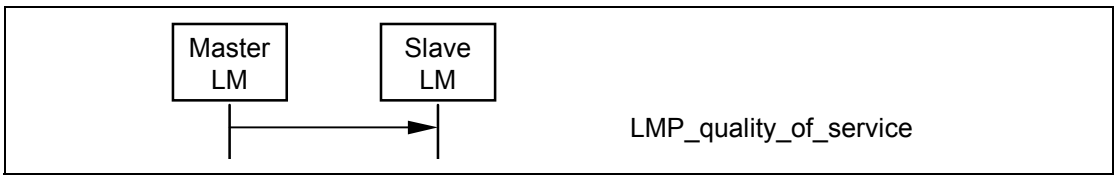

Sequence 12: Master notifies slave of quality of service.

4.1.8.2 Device requests new quality of service

Either the master or the slave may request a new poll interval and N_{BC} by sending an LMP_quality_of_service_req PDU to the slave. The parameter N_{BC} is meaningful only when it is sent by a master to a slave. For transmission of LMP_quality_of_service_req PDUs from a slave, this parameter shall be ignored by the master. The request can be accepted or rejected. This allows the master and slave to dynamically negotiate the quality of service as needed.

The selected poll interval by the slave shall be less than or equal to the specified Access Latency for the outgoing traffic of the ACL link (see L2CAP "Quality of Service (QoS) Option" on page 60[vol. 3]).

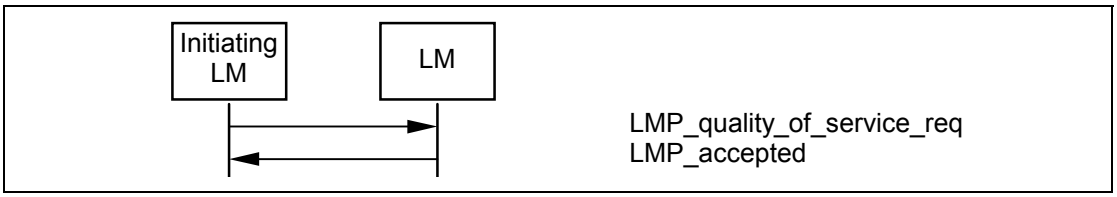

Sequence 13: Device accepts new quality of service

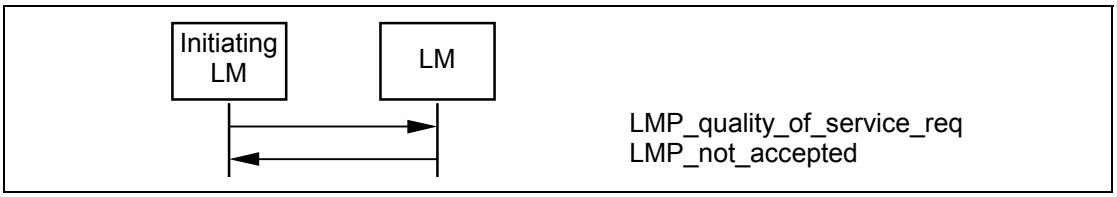

Sequence 14: Device rejects new quality of service.

4.1.9 Paging scheme parameters

LMP provides a means to negotiate the paging scheme parameters that are used the next time a device is paged.

M/O	PDU	Contents
O(17)	LMP_page_mode_req	paging scheme paging scheme settings
O(17)	LMP_page_scan_mode_req	paging scheme paging scheme settings

Table 4.9: PDUs used to request paging scheme.

4.1.9.1 Page mode

This procedure is initiated from device A and negotiates the paging scheme used when device A pages device B. Device A proposes a paging scheme including the parameters for this scheme and device B can accept or reject. On rejection the old setting will not be changed. A request to switch to a reserved paging scheme shall be rejected.

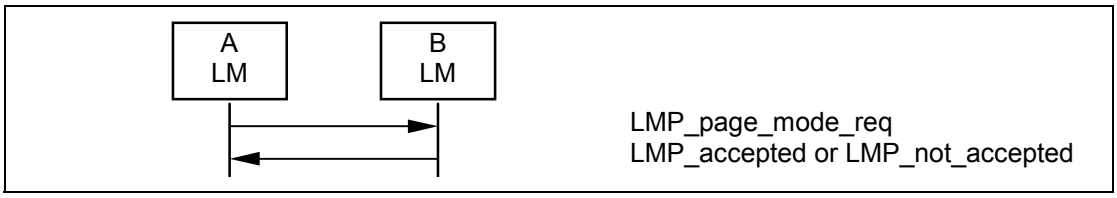

Sequence 15: Negotiation for page mode.

4.1.9.2 Page scan mode

This procedure is initiated from device A and negotiates the paging scheme and paging scheme settings used when device B pages device A. Device A proposes a paging scheme and paging scheme settings and device B may accept or reject. On reject the old setting is not changed. A request specifying the mandatory scheme shall be accepted. A request specifying a non-mandatory scheme shall be rejected. This procedure should be used when device A changes its paging scheme settings. A slave should also send this message to the master after connection establishment, to inform the master of the slave's current paging scheme and paging scheme settings.

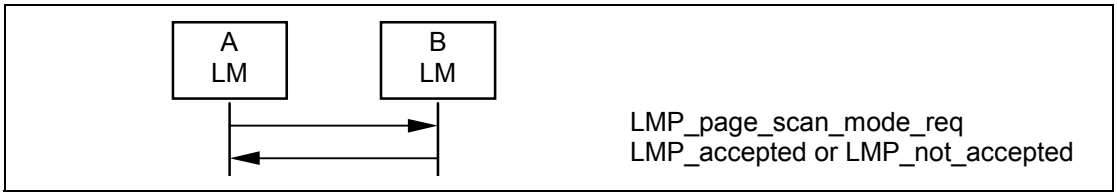

Sequence 16: Negotiation for page scan mode

4.1.10 Control of multi-slot packets

The number of consecutive slots used by a device on an ACL-U logical link can be limited. It does not affect traffic on the eSCO links where the packet sizes are defined as part of link setup. A device allows the remote device to use a maximum number of slots by sending the PDU LMP_max_slot providing max slots as parameter. Each device can request to use a maximal number of slots by sending the PDU LMP_max_slot_req providing max slots as parameter. After a new connection, as a result of page, page scan, role switch or unpark, the default value is 1 slot. These PDUs can be sent at anytime after connection setup is completed.

M/O	PDU	Contents
M	LMP_max_slot	max slots
M	LMP_max_slot_req	max slots

Table 4.10: PDUs used to control the use of multi-slot packets.

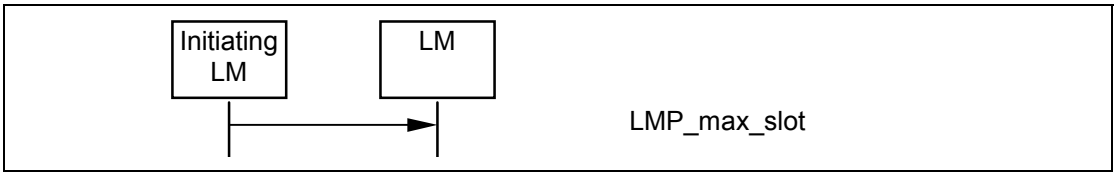

Sequence 17: Device allows Remote Device to use a maximum number of slots.

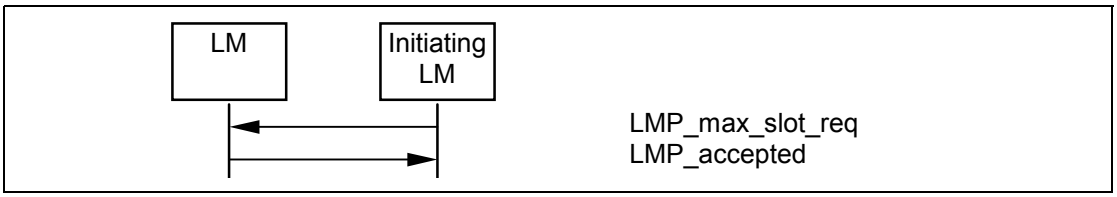

Sequence 18: Device requests a maximum number of slots. Remote Device accepts.

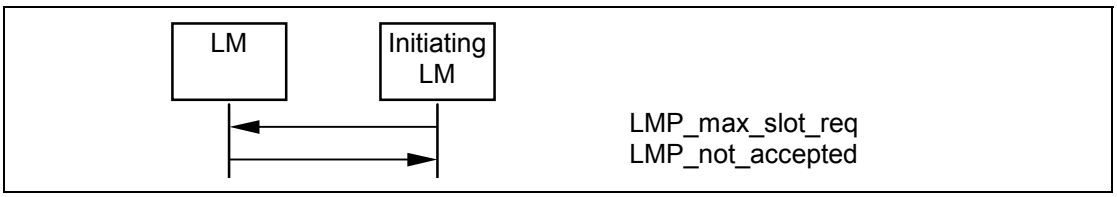

Sequence 19: Device requests a maximum number of slots. Remote Device rejects.

4.2 SECURITY

4.2.1 Authentication

The authentication procedure is based on a challenge-response scheme as described in [Part H] Section 5 on page 773. The verifier sends an LMP_au_rand PDU that contains a random number (the challenge) to the claimant. The claimant calculates a response, that is a function of this challenge, the claimant's BD_ADDR and a secret key. The response is sent back to the verifier, that checks if the response was correct or not. The response shall be calculated as described in [Part H] Section 6.1 on page 777. A successful calculation of the authentication response requires that two devices share a secret key. This key is created as described in Section 4.2.2 on page 226. Both the master and the slave can be verifiers.

M/O	PDU	Contents
M	LMP_au_rand	random number
M	LMP_sres	authentication response

Table 4.11: PDUs used for authentication.

4.2.1.1 Claimant has link key

If the claimant has a link key associated with the verifier, it shall calculate the response and sends it to the verifier with LMP_sres. The verifier checks the response. If the response is not correct, the verifier can end the connection by sending an LMP_detach PDU with the error code *authentication failure,* see Section 4.1.2 on page 210.

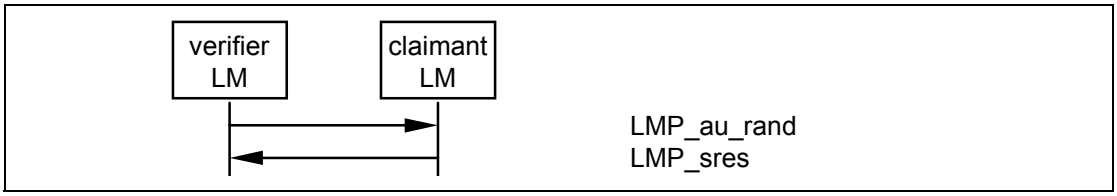

Sequence 20: Authentication. Claimant has link key.

Upon reception of an LMP_au_rand, an LM shall reply with LMP_sres before initiating its own authentication.
Note: there can be concurrent requests caused by the master and slave simultaneously initiating an authentication. The procedures in Section 2.5.1 on page 201 assures that devices will not have different Authenticated Cyphering Offset (ACO, see [Part H] Section 6.1 on page 777) when they calculate the encryption key.

4.2.1.2 Claimant has no link key

If the claimant does not have a link key associated with the verifier it shall send an LMP_not_accepted PDU with the error code *key missing* after receiving an LMP_au_rand PDU.

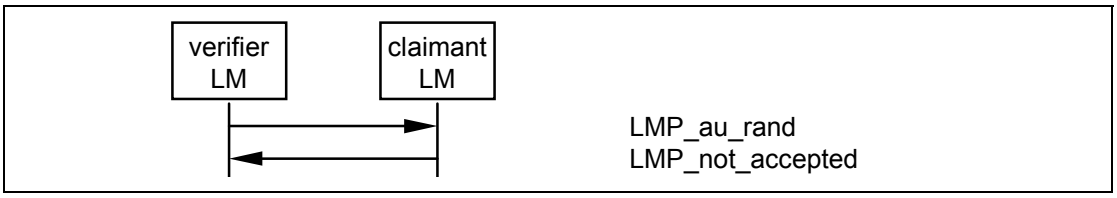

Sequence 21: Authentication fails. Claimant has no link key.

4.2.1.3 Repeated attempts

The scheme described in [Part H] Section 5.1 on page 775 shall be applied when an authentication fails. This will prevent an intruder from trying a large number of keys in a relatively short time.

4.2.2 Pairing

When two devices do not have a common link key an initialization key (K_{init}) shall be created based on a PIN, and a random number and a BD_ADDR. K_{init} shall be created as specified in [Part H] Section 6.3 on page 781. When both devices have calculated K_{init} the link key shall be created, and a mutual authentication is performed. The pairing procedure starts with a device sending an LMP_in_rand PDU; this device is referred to as the "initiating LM" or "initiator" in Section 4.2.2.1 on page 226 - Section 4.2.2.5 on page 228. The other device is referred to as the "responding LM" or "responder". The PDUs used in the pairing procedure are:

M/O	PDU	Contents
M	LMP_in_rand	random number
M	LMP_au_rand	random number
M	LMP_sres	authentication response
M	LMP_comb_key	random number
M	LMP_unit_key	key

Table 4.12: PDUs used for pairing

All sequences described in Section 4 on page 209, including the mutual authentication after the link key has been created, shall form a single transaction. The transaction ID from the first LMP_in_rand shall be used for all subsequent sequences.

4.2.2.1 Responder accepts pairing

When the initiator sends an LMP_in_rand PDU and the responder shall reply with an LMP_accepted PDU. Both devices shall then calculate K_{init} based on the BD_ADDR of the responder and the procedure continues with creation of the link key; see Section 4.2.2.4 on page 228.

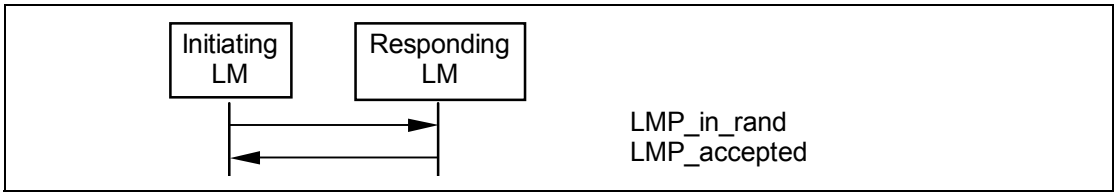

Sequence 22: Pairing accepted. Responder has a variable PIN. Initiator has a variable or fixed PIN.

4.2.2.2 Responder has a fixed PIN

If the responder has a fixed PIN it shall generate a new random number and send it back in an LMP_in_rand PDU. If the initiator has a variable PIN it shall accept the LMP_in_rand PDU and shall respond with an LMP_accepted PDU. Both sides shall then calculate K_{init} based on the last IN_RAND and the BD_ADDR of the initiator. The procedure continues with creation of the link key; see Section 4.2.2.4 on page 228.

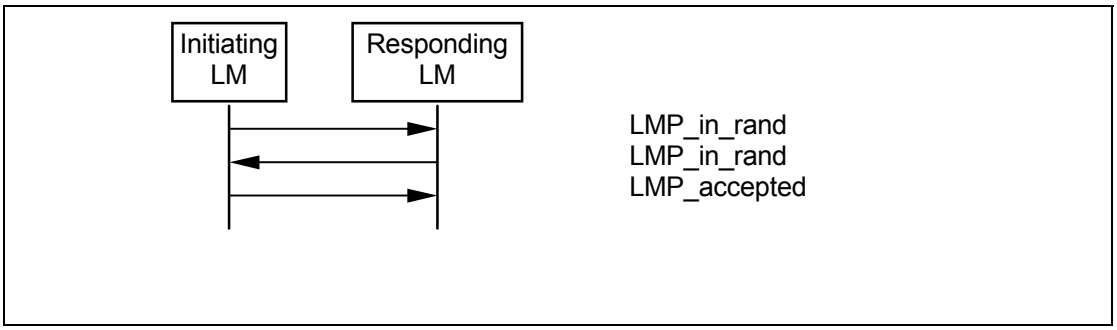

Sequence 23: Responder has a fixed PIN and initiator has a variable PIN.

If the responder has a fixed PIN and the initiator also has a fixed PIN, the second LMP_in_rand shall be rejected by the initiator sending an LMP_not_accepted PDU with the error code *pairing not allowed*.

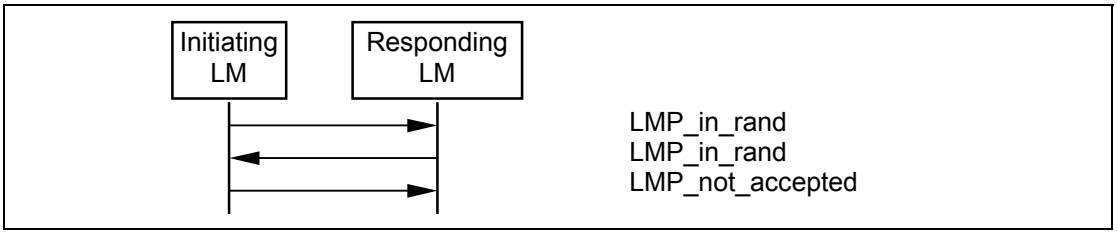

Sequence 24: Both devices have a fixed PIN.

4.2.2.3 Responder rejects pairing

If the responder rejects pairing it shall send an LMP_not_accepted PDU with the error code *pairing not allowed* after receiving an LMP_in_rand PDU.

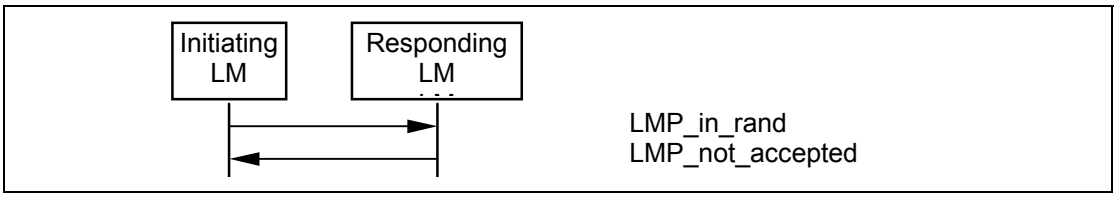

Sequence 25: Responder rejects pairing.

4.2.2.4 Creation of the link key

When K_{init} is calculated in both devices the link key shall be created. This link key will be used in the authentication between the two devices for all subsequent connections until it is changed; see Section 4.2.3 on page 229 and Section 4.2.4 on page 230. The link key created in the pairing procedure will either be a combination key or one of the device's unit keys. The following rules shall apply to the selection of the link key:

- if one device sends an LMP_unit_key PDU and the other device sends LMP_comb_key, the unit key will be the link key.
- if both devices send an LMP_unit_key PDU, the master's unit key will be the link key.
- if both devices send an LMP_comb_key PDU, the link key shall be calculated as described in [Part H] Section 3.2 on page 755.

The content of the LMP_unit_key PDU is the unit key bitwise XORed with K_{init}. The content of the LMP_comb_key PDU is LK_RAND bitwise XORed with K_{init}. Any device configured to use a combination key shall store the link key.

The use of unit keys is deprecated since it is implicitly insecure.

When the link key, combination or unit key, has been created mutual authentication shall be performed to confirm that the same link key has been created in both devices. The first authentication in the mutual authentication is performed with the initiator as the verifier. When finalized an authentication in the reverse direction is performed.

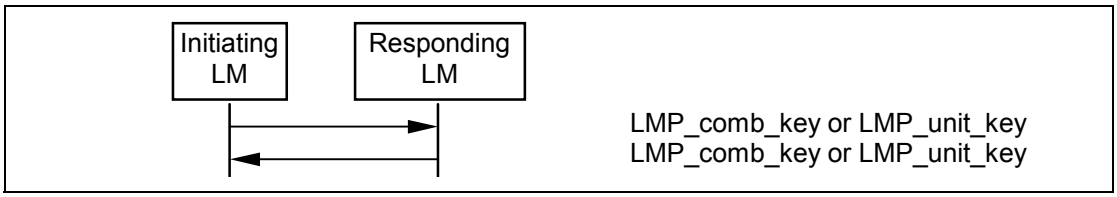

Sequence 26: Creation of the link key.

4.2.2.5 Repeated attempts

When the authentication after creation of the link key fails because of an incorrect authentication response, the same scheme as in Section 4.2.1.3 on page 225 shall be used. This prevents an intruder from trying a large number of different PINs in a relatively short time.

4.2.3 Change link key

If the link key is derived from combination keys and the current link is the semi-permanent link key, the link key can be changed. If the link key is a unit key, the devices shall go through the pairing procedure in order to change the link key. The contents of the LMP_comb_key PDU is protected by a bitwise XOR with the current link key.

M/O	PDU	Contents
M	LMP_comb_key	random number

Table 4.13: PDUs used for change of link key.

All sequences described in Section 4.2.3 , including the mutual authentication after the link key has been changed, shall form a single transaction. The transaction ID from the first LMP_comb_key PDU shall be used for all subsequent sequences.

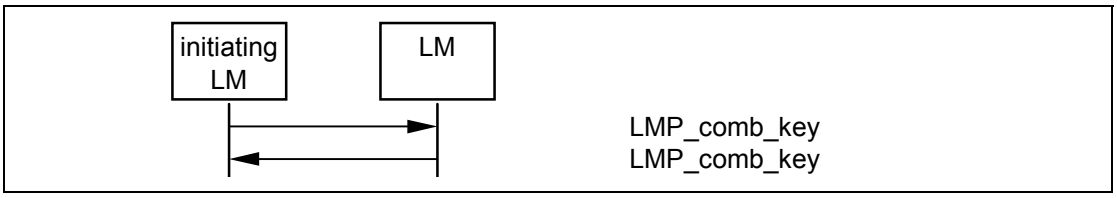

Sequence 27: Successful change of the link key.

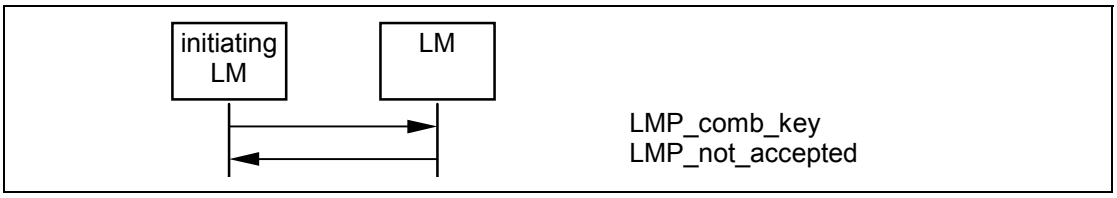

Sequence 28: Change of the link key not possible since the other device uses a unit key.

If the change of link key is successful the new link key shall be stored and the old link key shall be discarded. The new link key shall be used as link key for all the following connections between the two devices until the link key is changed again. The new link key also becomes the current link key. It will remain the current link key until the link key is changed again, or until a temporary link key is created, see Section 4.2.4 on page 230.

When the new link key has been created mutual authentication shall be performed to confirm that the same link key has been created in both devices. The first authentication in the mutual authentication is performed with the device that initiated change link key as verifier. When finalized an authentication in the reverse direction is performed.

4.2.4 Change current link key type

The current link key can be a semi-permanent link key or a temporary link key. It may be changed temporarily, but the change shall only be valid for the current connection, see [Part H] Section 3.1 on page 753. Changing to a temporary link key is necessary if the piconet is to support encrypted broadcast. The current link key may not be changed before the connection establishment procedure has completed. This feature is only supported if broadcast encryption is supported as indicated by the LMP features mask.

M/O	PDU	Contents
O(23)	LMP_temp_rand	random number
O(23)	LMP_temp_key	key
O(23)	LMP_use_semi_permanent_key	-

Table 4.14: PDUs used to change the current link key.

4.2.4.1 Change to a temporary link key

The master starts by creating the master key K_{master} as specified in Security Specification (EQ 4), on page 760. Then the master shall generate a random number, RAND, and shall send it to the slave in an LMP_temp_rand PDU. Both sides then calculate an overlay denoted OVL as OVL= E_{22}(current link key, RAND, 16). The master shall then send K_{master} protected by a modulo-2 addition with OVL to the slave in an LMP_temp_key PDU. The slave calculates K_{master}, based on OVL, that becomes the current link key. It shall be the current link key until the devices fall back to the semi-permanent link key, see section 4.2.4.2 on page 231.

Note: the terminology in this section is the same as used in [Part H] Section 3.2.8 on page 760.

Sequence 29: Change to a temporary link key.

All sequences described in Section 4.2.4.1 on page 230, including the mutual authentication after K_{master} has been created, shall form a single transaction. The transaction ID shall be set to 0.

When the devices have changed to the temporary key, a mutual authentication shall be made to confirm that the same link key has been created in both devices. The first authentication in the mutual authentication shall be per-

formed with the master as verifier. When finalized an authentication in the reverse direction is performed.

Should the mutual authentication fail at either side, the LM of the verifier should start the detach procedure. This will allow the procedure to succeed even though one of the devices may be erroneous.

4.2.4.2 Make the semi-permanent link key the current link key

After the current link key has been changed to K_{master}, this change can be undone and the semi-permanent link key becomes the current link key again. If encryption is used on the link, the procedure to go back to the semi-permanent link key shall be immediately followed by the master stopping encryption using the procedure described in Section 4.2.5.4 on page 235. Encryption may be restarted by the master according to the procedures in section 4.2.5.1 on page 232 subsection 3. This is to assure that encryption with encryption parameters known by other devices in the piconet is not used when the semi-permanent link key is the current link key.

Sequence 30: Link key changed to the semi-permanent link key.

4.2.5 Encryption

If at least one authentication has been performed encryption may be used. In order for the master to use the same encryption parameters for all slaves in the piconet it shall issue a temporary key, K_{master}. The master shall make this key the current link key for all slaves in the piconet before encryption is started, see Section 4.2.4 on page 230. This is required if broadcast packets are to be encrypted.

M/O	PDU	Contents
O	LMP_encryption_mode_req	encryption mode
O	LMP_encryption_key_size_req	key size
O	LMP_start_encryption_req	random number
O	LMP_stop_encryption_req	-

Table 4.15: PDUs used for handling encryption.

All sequences described in Section 4.2.5 shall form a single transaction. The transaction ID from the LMP_encryption_mode_req PDU shall be used for all subsequent sequences.

4.2.5.1 Encryption mode

The master and the slave must agree upon whether to use encryption (encryption mode=1 in lmp_encryption_mode_req) or not (encryption mode=0). If the semi-permanent key is used (Key_Flag=0x00) encryption shall only apply to point-to-point packets. If the master link key is used (Key_Flag=0x01) encryption shall apply to both point-to-point packets and broadcast packets. If master and slave agree on the encryption mode, the master continues to give more detailed information about the encryption.

Devices should never send LMP_encryption_mode_req with an encryption mode value of 2 however for backwards compatibility if the LMP_encryption_mode_req is received with an encryption mode value of 2 then it should be treated the same as an encryption mode value of 1.

The initiating LM shall pause traffic on the ACL-U logical link (see Baseband Specification, Section 5.3.1, on page 96). The initiating device shall then send the LMP_encryption_mode_req PDU. If the responding device accepts the change in encryption mode then it shall complete the transmission of the current packet on the ACL logical transport and shall then suspend transmission on the ACL-U logical link. The responding device shall then send the LMP_accepted PDU.

ACL-U logical link traffic shall only be resumed after the attempt to encrypt or decrypt the logical transport is completed i.e. at the end of Sequence 31, 32 or 33.

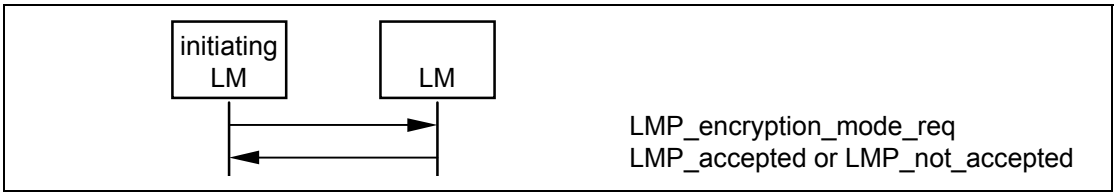

Sequence 31: Negotiation for encryption mode.

After a device has sent an LMP_encryption_mode_req PDU it shall not send an LMP_au_rand PDU before encryption is started. After a device has received an LMP_encryption_mode_req PDU and sent an LMP_accepted PDU it shall not send an LMP_au_rand PDU before encryption is started. If an LMP_au_rand PDU is sent violating these rules, the claimant shall respond with an LMP_not_accepted PDU with the error code *PDU not allowed*. This assures that devices will not have different ACOs when they calculate the encryption key. If the encryption mode is not accepted or the encryption key size negotiation results in disagreement the devices may send an LMP_au_rand PDU again.

4.2.5.2 Encryption key size

Note: this section uses the same terms as in [Part H] Section 4.1 on page 764. The master sends an LMP_encryption_key_size_req PDU including the suggested key size L_{sug}, m, that is initially equal to $L_{max, m}$. If $L_{min, s} \leq L_{sug, m}$ and the slave supports $L_{sug, m}$ it shall respond with an LMP_accepted PDU and $L_{sug, m}$ shall be used as the key size. If both conditions are not fulfilled the slave sends back an LMP_encryption_key_size_req PDU including the slave's suggested key size $L_{sug, s}$. This value shall be the slave's largest supported key size that is less than $L_{sug, m}$. Then the master performs the corresponding test on the slave's suggestion. This procedure is repeated until a key size agreement is reached or it becomes clear that no such agreement can be reached. If an agreement is reached a device sends an LMP_accepted PDU and the key size in the last LMP_encryption_key_size_req PDU shall be used. After this, encryption is started; see Section 4.2.5.3 on page 234. If an agreement is not reached a device sends an LMP_not_accepted PDU with the error code *unsupported parameter value* and the devices shall not communicate using encryption.

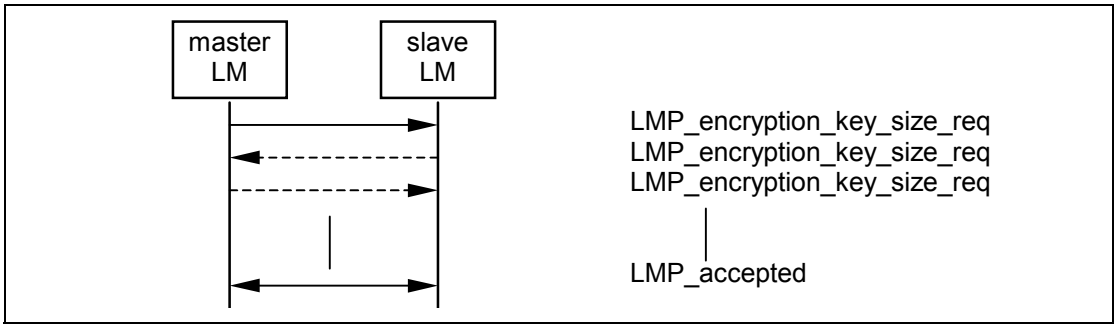

Sequence 32: Encryption key size negotiation successful.

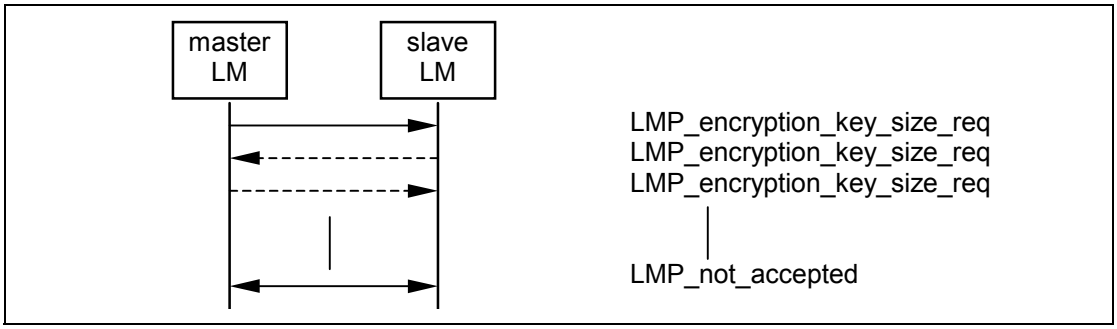

Sequence 33: Encryption key size negotiation failed.

4.2.5.3 Start encryption

To start encryption, the master issues the random number EN_RAND and calculates the encryption key. See [Part H] Section 3.2.5 on page 758. The random number shall be the same for all slaves in the piconet when broadcast encryption is used. The master then sends an LMP_start_encryption_req PDU, that includes EN_RAND. The slave shall calculate the encryption key when this message is received and shall acknowledge with an LMP_accepted PDU.

Sequence 34: Start of encryption.

Starting encryption shall be performed in three steps:

1. Master is configured to transmit unencrypted packets and to receive encrypted packets.
2. Slave is configured to transmit and receive encrypted packets.
3. Master is configured to transmit and receive encrypted packets.

Between step 1 and step 2, master-to-slave transmission is possible. This is when an LMP_start_encryption_req PDU is transmitted. Step 2 is triggered when the slave receives this message. Between step 2 and step 3, slave-to-master
transmission is possible. This is when an LMP_accepted PDU is transmitted. Step 3 is triggered when the master receives this message.

4.2.5.4 Stop encryption

To stop encryption a device shall send an LMP_encryption_mode_req PDU with the parameter encryption mode equal to 0 (no encryption). The other device responds with an LMP_accepted PDU or an LMP_not_accepted PDU (the procedure is described in Sequence 31 in section 4.2.5.1 on page 232). If accepted, encryption shall be stopped by the master sending an LMP_stop_encryption_req PDU and the slave shall respond with an LMP_accepted PDU according to Sequence 35.

Sequence 35: Stop of encryption.

Stopping encryption shall be performed in three steps, similar to the procedure for starting encryption.

1. Master is configured to transmit encrypted packets and to receive unencrypted packets.
2. Slave is configured to transmit and receive unencrypted packets.
3. Master is configured to transmit and receive unencrypted packets.

Between step 1 and step 2 master to slave transmission is possible. This is when an LMP_stop_encryption_req PDU is transmitted. Step 2 is triggered when the slave receives this message. Between step 2 and step 3 slave to master transmission is possible. This is when an LMP_accepted PDU is transmitted. Step 3 is triggered when the master receives this message.

4.2.5.5 Change encryption mode, key or random number

If the encryption key or encryption random number need to be changed or if the current link key needs to be changed according to the procedures in Section 4.2.4 on page 230, encryption shall be stopped and re-started after completion, using the procedures in Section 4.2.5 on page 232, subsections 3-4 for the new parameters to take effect.

4.2.6 Request supported encryption key size

When broadcast encryption is supported via the LMP features mask, it is possible for the master to request a slave's supported encryption key sizes.

M/O	PDU	Contents
O(23)	LMP_encryption_key_size_mask_req	
O(23)	LMP_encryption_key_size_mask_res	key size mask

Table 4.16: PDUs used for encryption key size request

The master shall send an LMP_key_size_req PDU to the slave to obtain the slaves supported encryption key sizes.

The slave shall return a bit mask indicating all broadcast encryption key sizes supported. The least significant bit shall indicate support for a key size of 1, the next most significant bit shall indicate support for a key size of 2 and so on up to a key size of 16. In all cases a bit set to 1 shall indicate support for a key size; a bit set to 0 shall indicate that the key size is not supported.

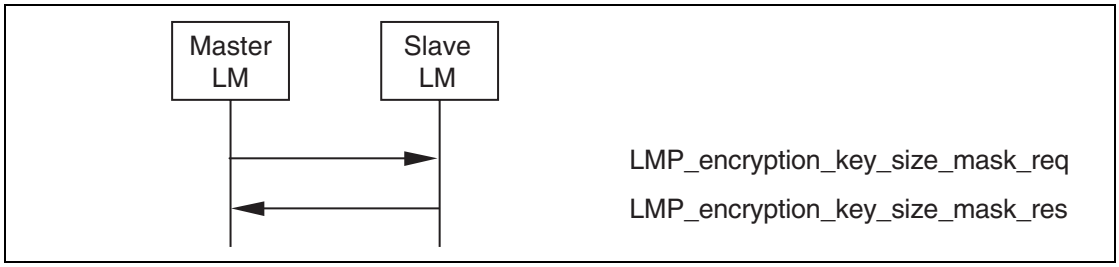

Sequence 36: Request for supported encryption key sizes.

4.3 INFORMATIONAL REQUESTS

4.3.1 Timing accuracy

LMP supports requests for the timing accuracy. This information can be used to minimize the scan window during piconet physical channel re-synchronization (see Baseband Specification, Section 2.2.5.2, on page 62). The timing accuracy parameters returned are the long term drift measured in ppm and the long term jitter measured in µs of the worst case clock used. These parameters are fixed for a certain device and shall be identical when requested several times. Otherwise, the requesting device shall assume worst case values (drift=250ppm and jitter=10µs).

M/O	PDU	Contents
O(4)	LMP_timing_accuracy_req	-
O(4)	LMP_timing_accuracy_res	drift jitter

Table 4.17: PDUs used for requesting timing accuracy information.

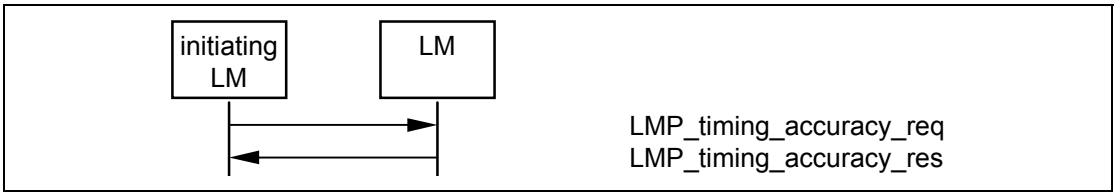

Sequence 37: The requested device supports timing accuracy information.

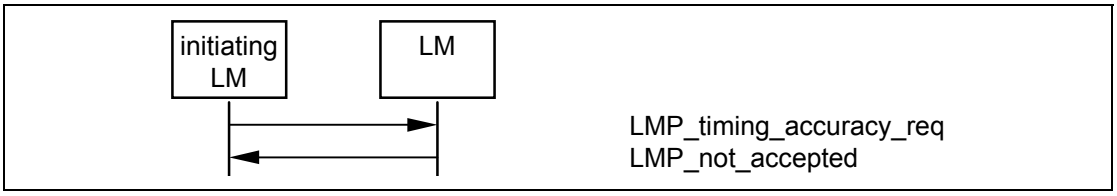

Sequence 38: The requested device does not support timing accuracy information.

4.3.2 Clock offset

The clock offset can be used to speed up the paging time the next time the same device is paged. The master can request the clock offset at anytime following a successful baseband paging procedure (i.e., before, during or after connection setup). The clock offset shall be defined by the following equation:

$(CLKN_{16\text{-}2\ slave} - CLKN_{16\text{-}2\ master})$ mod 2**15.

M/O	PDU	Contents
M	LMP_clkoffset_req	-
M	LMP_clkoffset_res	clock offset

Table 4.18: PDUs used for clock offset request.

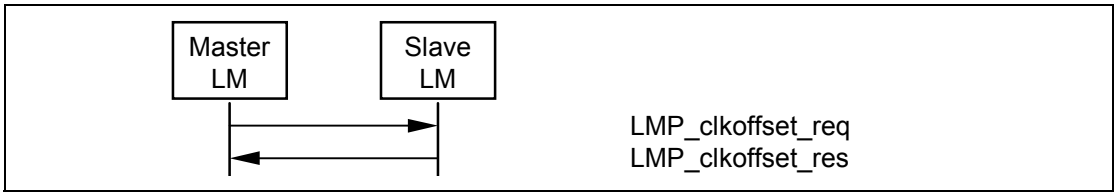

Sequence 39: Clock offset requested.

4.3.3 LMP version

LMP supports requests for the version of the LM protocol. The LMP_version_req and LMP_version_res PDUs contain three parameters: VersNr, CompId and SubVersNr. VersNr specifies the version of the Bluetooth LMP specification that the device supports. CompId is used to track possible problems with the lower Bluetooth layers. All companies that create a unique implementation of the LM shall have their own CompId. The same company is also responsible for the administration and maintenance of the SubVersNr. It is recommended that each company has a unique SubVersNr for each RF/BB/LM implementation. For a given VersNr and CompId, the values of the SubVersNr shall increase each time a new implementation is released. For both CompId and SubVersNr the value 0xFFFF means that no valid number applies. There is no ability to negotiate the version of the LMP. The sequence below is only used to exchange the parameters. LMP version can be requested at anytime following a successful baseband paging procedure.

M/O	PDU	Contents
M	LMP_version_req	VersNr CompId SubVersNr
M	LMP_version_res	VersNr CompId SubVersNr

Table 4.19: PDUs used for LMP version request.

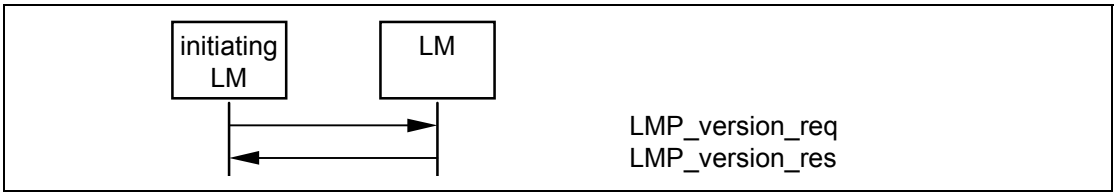

Sequence 40: Request for LMP version.

4.3.4 Supported features

The supported features may be requested at anytime following a successful baseband paging procedure by sending the LMP_features_req PDU. Upon reception of an LMP_features_req PDU, the receiving device shall return an LMP_features_res PDU.

The number of features bits required will in the future exceed the size of a single page of features. An extended features mask is therefore provided to allow support for more than 64 features. Support for the extended features mask is indicated by the presence of the appropriate bit in the LMP features mask. The LMP_features_req_ext and LMP_features_res_ext PDUs operate in precisely the same way as the LMP_features_req and LMP_features_res PDUs except that they allow the various pages of the extended features mask to be requested. The LMP_features_req_ext may be sent at any time following the exchange of the LMP_features_req and LMP_features_rsp PDUs.

The LMP_features_req_ext PDU contains a feature page index that specifies which page is requested and the contents of that page for the requesting device. Pages are numbered from 0-255 with page 0 corresponding to the normal features mask. Each page consists of 64 bits. If a device does not support any page number it shall return a mask with every bit set to 0. It also contains the maximum features page number containing any non-zero bit for this device. The recipient of an LMP_features_req_ext PDU shall respond with an LMP_features_res_ext PDU containing the same page number and the appropriate features page along with its own maximum features page number.

If the extended features request is not supported then all bits in all extended features pages for that device shall be assumed to be zero.

M/O	PDU	Contents
M	LMP_features_req	features
M	LMP_features_res	features
O(63)	LMP_features_req_ext	features page max supported page extended features
O(63)	LMP_features_res_ext	features page max supported page extended features

Table 4.20: PDUs used for features request.

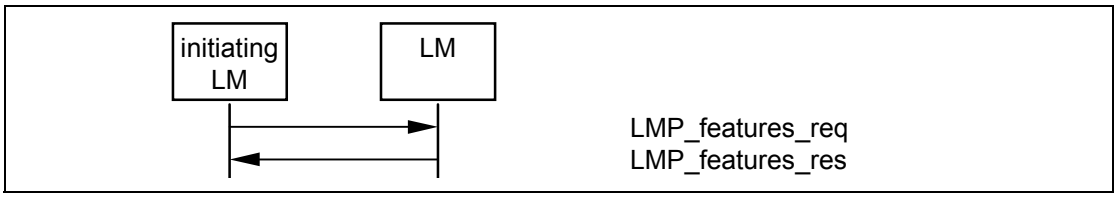

Sequence 41: Request for supported features.

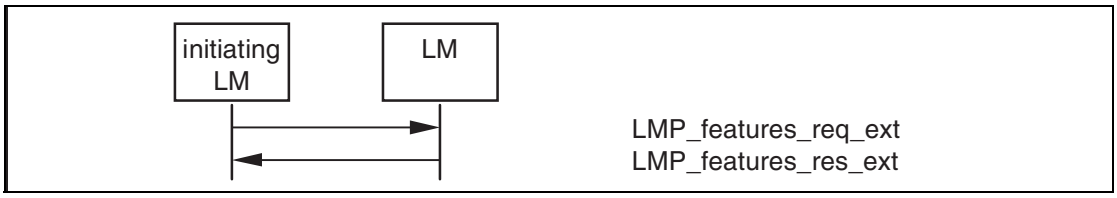

Sequence 42: Request for extended features.

4.3.5 Name request

LMP supports name request to another device. The name is a user-friendly name associated with the device and consists of a maximum of 248 bytes coded according to the UTF-8 standard. The name is fragmented over one or more DM1 packets. When an LMP_name_req PDU is sent, a name offset indicates which fragment is expected. The corresponding LMP_name_res PDU carries the same name offset, the name length indicating the total number of bytes in the name of the device and the name fragment, where:

- name fragment(N) = name(N + name offset), if (N + name offset) < name length
- name fragment(N) = 0,otherwise.

Here $0 \leq N \leq 13$. In the first sent LMP_name_req PDU, name offset=0. Sequence 43 is then repeated until the initiator has collected all fragments of the name. The name request may be made at any time following a successful baseband paging procedure.

M/O	PDU	Contents
M	LMP_name_req	name offset
M	LMP_name_res	name offset name length name fragment

Table 4.21: PDUs used for name request.

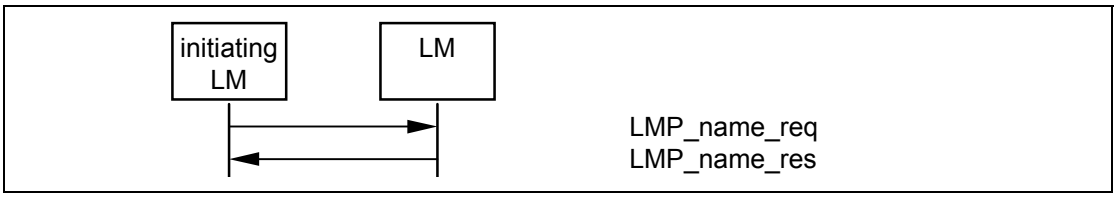

Sequence 43: Device's name requested and it responses.

4.4 ROLE SWITCH

4.4.1 Slot offset

With LMP_slot_offset the information about the difference between the slot boundaries in different piconets is transmitted. The LMP_slot_offset PDU may be sent anytime after the baseband paging procedure has completed. This PDU carries the parameters slot offset and BD_ADDR. The slot offset shall be the time in microseconds between the start of a master transmission in the current piconet to the start of the next following master transmission in the piconet where the BD_ADDR device (normally the slave) is master at the time that the request is interpreted by the BD_ADDR device.

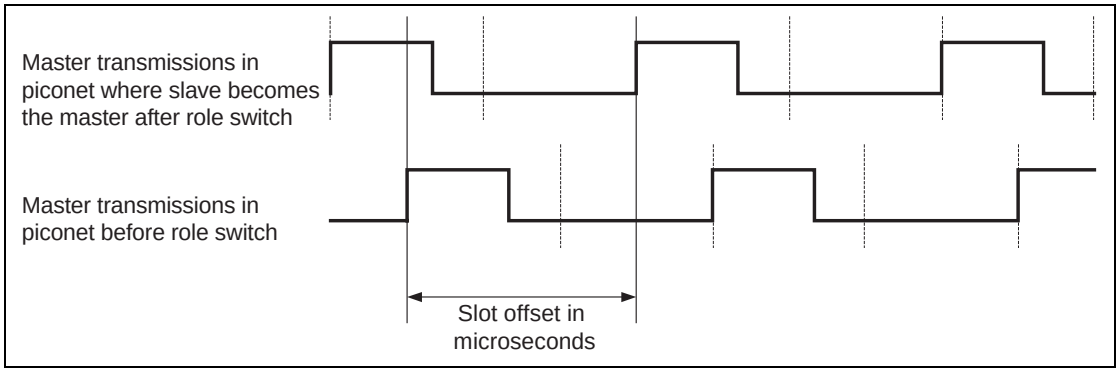

Figure 4.2: Slot offset for role switch.

See Section 4.4 on page 242 for the use of LMP_slot_offset in the context of the role switch. In the case of role switch the BD_ADDR is that of the slave device.

M/O	PDU	Contents
O(3)	LMP_slot_offset	slot offset BD_ADDR

Table 4.22: PDU used for slot offset information.

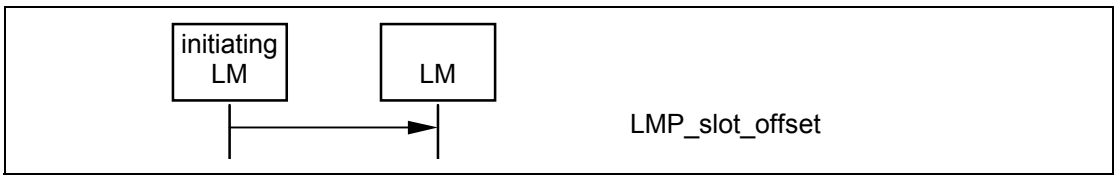

Sequence 44: Slot offset information is sent.

4.4.2 Role switch

Since the paging device always becomes the master of the piconet, a switch of the master slave role is sometimes needed, see Baseband Specification, Section 8.6.5, on page 155. The LMP_switch_req PDU may be sent anytime after the baseband paging procedure has completed.

Support for LMP_slot_offset is mandatory if LMP_switch_req is supported.

The LMP_slot_offset shall be sent only if the ACL logical transport is in active mode. The LMP_switch_req shall be sent only if the ACL logical transport is in active mode, when encryption is disabled, and all synchronous logical transports on the same physical link are disabled. Additionally, LMP_slot_offset or LMP_switch_req shall not be initiated or accepted while a synchronous logical transport is being negotiated by LM.

M/O	PDU	Contents
O(5)	LMP_switch_req	switch instant
O(5)	LMP_slot_offset	slot offset BD_ADDR

Table 4.23: PDUs used for role switch.

The initiating LM shall pause traffic on the ACL-U logical link (see Baseband Specification, Section 5.3.1, on page 96). It shall then send an LMP_slot_offset PDU immediately followed by an LMP_switch_req PDU. If the master accepts the role switch it shall pause traffic on the ACL-U logical link (seeBaseband Specification, Section 5.3.1, on page 96) and respond with an LMP_accepted PDU. When the role switch has been completed at the baseband level (successfully or not) both devices re-enable transmission on the ACL-U logical link. If the master rejects the role switch it responds with an LMP_not_accepted PDU and the slave re-enables transmission on the ACL-U logical link. The transaction ID for all PDUs in the sequence shall be set to 1.

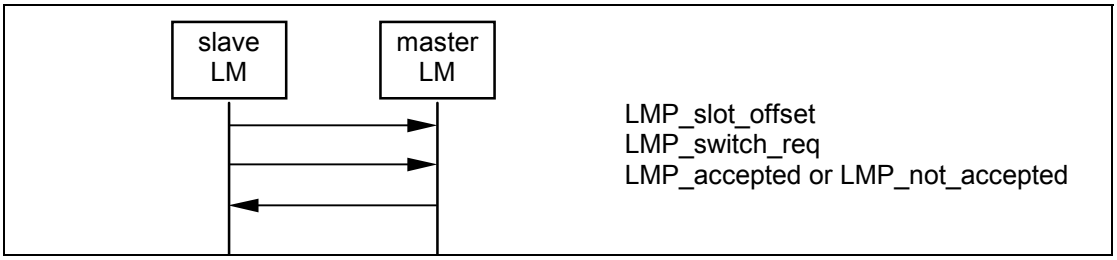

Sequence 45: Role switch (slave initiated).

If the master initiates the role switch it shall pause traffic on the ACL-U logical link (see Baseband Specification, Section 5.3.1, on page 96) and send an LMP_switch_req PDU. If the slave accepts the role switch it shall pause traffic on the ACL-U logical link (see Baseband Specification, Section 5.3.1, on page 96) and responds with an LMP_slot_offset PDU immediately followed by an

LMP_accepted PDU. When the role switch has been completed at the baseband (successfully or not) both devices re-enable transmission on the ACL-U logical link. If the slave rejects the role switch it responds with an LMP_not_accepted PDU and the master re-enables transmission on the ACL-U logical link. The transaction ID for all PDUs in the sequence shall be set to 0.

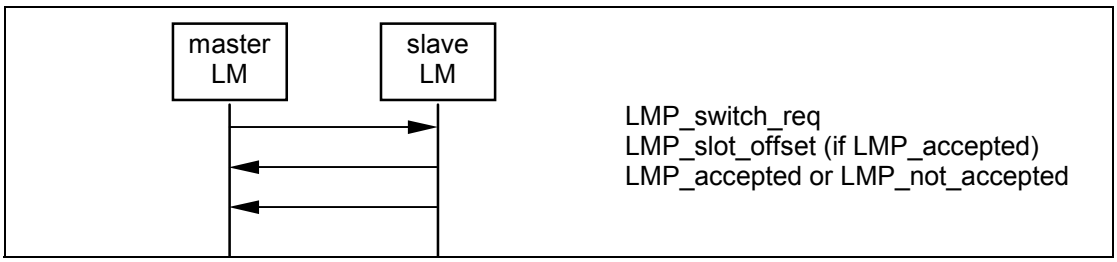

Sequence 46: Role switch (master initiated).

The LMP_switch_req PDU contains a parameter, switch instant, which specifies the instant at which the TDD switch is performed. This is specified as a Bluetooth clock value of the master's clock, that is available to both devices. This instant is chosen by the sender of the message and shall be at least $2*T_{poll}$ or 32 (whichever is greater) slots in the future. The switch instant shall be within 12 hours of the current clock value to avoid clock wrap.

The sender of the LMP_switch_req PDU selects the switch instant and queues the LMP_switch_req PDU to LC for transmission and starts a timer to expire at the switch instant. When the timer expires it initiates the mode switch. In the case of a master initiated switch if the LMP_slot_offset PDU has not been received by the switch instant the role switch is carried out without an estimate of the slave's slot offset. If an LMP_not_accepted PDU is received before the timer expires then the timer is stopped and the role switch shall not be initiated.

When the LMP_switch_req is received the switch instant is compared with the current master clock value. If it is in the past then the instant has been passed and an LMP_not_accepted PDU with the error code *instant passed* shall be returned. If it is in the future then an LMP_accepted PDU shall be returned assuming the role switch is allowed and a timer is started to expire at the switch instant. When this timer expires the role switch shall be initiated.

After a successful role switch the supervision timeout and poll interval (T_{poll}) shall be set to their default values. The authentication state and the ACO shall remain unchanged. Adaptive Frequency Hopping shall follow the procedures described in Baseband Specification, Section 8.6.5, on page 155. The default value for max_slots shall be used.

4.5 MODES OF OPERATION

4.5.1 Hold mode

The ACL logical transport of a connection between two Bluetooth devices can be placed in hold mode for a specified hold time. See Baseband Specification, Section 8.8, on page 165 for details.

M/O	PDU	Contents
O(6)	LMP_hold	hold time, hold instant
O(6)	LMP_hold_req	hold time, hold instant

Table 4.24: PDUs used for hold mode.

The LMP_hold and LMP_hold_req PDUs both contain a parameter, hold instant, that specifies the instant at which the hold becomes effective. This is specified as a Bluetooth clock value of the master's clock, that is available to both devices. The hold instant is chosen by the sender of the message and should be at least $6*T_{poll}$ slots in the future. The hold instant shall be within 12 hours of the current clock value to avoid clock wrap.

4.5.1.1 Master forces hold mode

The master may force hold mode if there has previously been a request for hold mode that has been accepted. The hold time included in the PDU when the master forces hold mode shall not be longer than any hold time the slave has previously accepted when there was a request for hold mode.

The master LM shall first pause traffic on the ACL-U logical link (see Baseband Specification, Section 5.3.1, on page 96). It shall select the hold instant and queue the LMP_hold PDU to its LC for transmission. It shall then start a timer to wait until the hold instant occurs. When this timer expires then the connection shall enter hold mode. If the baseband acknowledgement for the LMP_hold PDU is not received then the master may enter hold mode, but it shall not use its low accuracy clock during the hold.

When the slave LM receives an LMP_hold PDU it compares the hold instant with the current master clock value. If it is in the future then it starts a timer to expire at this instant and enters hold mode when it expires.

When the master LM exits from Hold mode it re-enables transmission on the ACL-U logical link.

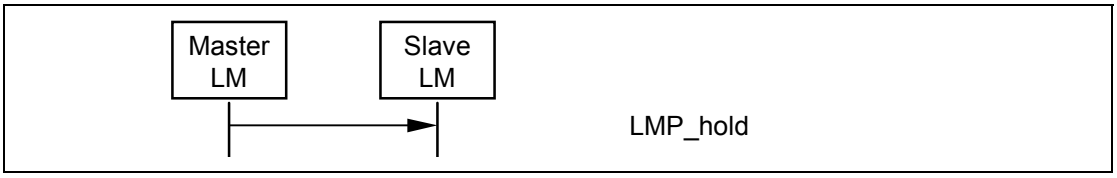

Sequence 47: Master forces slave into hold mode.

4.5.1.2 Slave forces hold mode

The slave may force hold mode if there has previously been a request for hold mode that has been accepted. The hold time included in the PDU when the slave forces hold mode shall not be longer than any hold time the master has previously accepted when there was a request for hold mode.

The slave LM shall first complete the transmission of the current packet on the ACL logical transport and then shall suspend transmission on the ACL-U logical link. It shall select the hold instant and queue the LMP_hold PDU to its LC for transmission. It shall then wait for an LMP_hold PDU from the master acting according to the procedure described in Section 4.5.1.1 .

When the master LM receives an LMP_hold PDU it shall pause traffic on the ACL-U logical link (see Baseband Specification, Section 5.3.1, on page 96). It shall then inspect the hold instant. If this is less than $6*T_{poll}$ slots in the future it shall modify the instant so that it is at least $6*T_{poll}$ slots in the future. It shall then send an LMP_hold PDU using the mechanism described in Section 4.5.1.1 .

When the master and slave LMs exit from Hold mode they shall re-enable transmission on the ACL-U logical link.

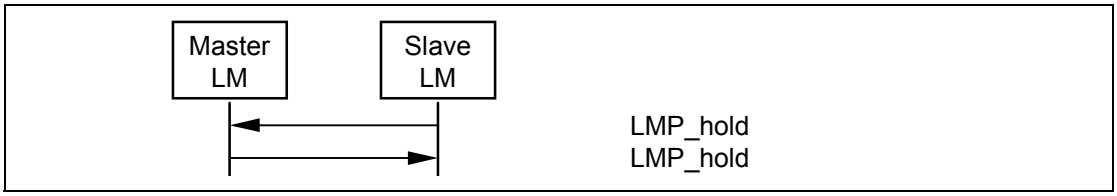

Sequence 48: Slave forces master into hold mode.

4.5.1.3 Master or slave requests hold mode

The master or the slave can request to enter hold mode. Upon receipt of the request, the same request with modified parameters can be returned or the negotiation can be terminated. If an agreement is seen an LMP_accepted PDU terminates the negotiation and the ACL link is placed in hold mode. If no agreement is seen, an LMP_not_accepted PDU with the error code *unsupported parameter value* terminates the negotiation and hold mode is not entered.

The initiating LM shall pause traffic on the ACL-U logical link (see Baseband Specification, Section 5.3.1, on page 96). On receiving an LMP_hold_req PDU the receiving LM shall complete the transmission of the current packet on the ACL logical transport and then shall suspend transmission on the ACL-U logical link.

The LM sending the LMP_hold_req PDU selects the hold instant, that shall be at least $9*T_{poll}$ slots in the future. If this is a response to a previous LMP_hold_req PDU and the contained hold instant is at least $9*T_{poll}$ slots in the

future then this shall be used. The LMP_hold_req PDU shall then be queued to its LC for transmission and a timer shall be started to expire at this instant and the connection enters hold mode when it expires unless an LMP_not_accepted or LMP_hold_req PDU is received by its LM before that point. If the LM receiving LMP_hold_req PDU agrees to enter hold mode it shall return an LMP_accepted PDU and shall start a timer to expire at the hold instant. When this timer expires it enters hold mode.

When each LM exits from Hold mode it shall re-enable transmission on the ACL-U logical link.

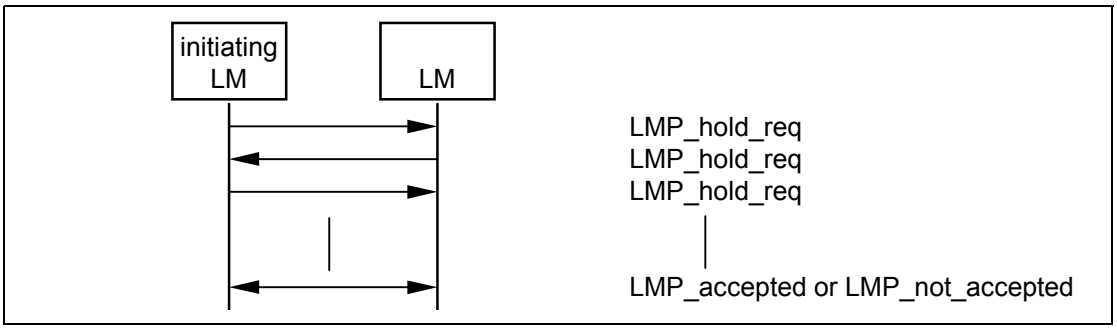

Sequence 49: Negotiation for hold mode.

4.5.2 Park state

If a slave does not need to participate in the channel, but should still remain synchronized to the master, it may be placed in park state. See Baseband Specification, Section 8.9, on page 165 for details.

Note: to keep a parked slave connected the master shall periodically unpark and repark the slave if the supervision timeout is not set to zero (see Baseband Specification, Section 3.1, on page 83).

All PDUs sent from the master to parked slaves are carried on the PSB-C logical link (LMP link of parked slave broadcast logical transport). These PDUs, LMP_set_broadcast_scan_window, LMP_modify_beacon, LMP_unpark_BD_addr_req and LMP_unpark_PM_addr_req, are the only PDUs that shall be sent to a slave in park state and the only PDUs that shall be broadcast. To increase reliability for broadcast, the packets are as short as possible. Therefore the format for these LMP PDUs are somewhat different. The parameters are not always byte-aligned and the length of the PDUs is variable.

The messages for controlling park state include parameters, defined in Baseband Specification, Section 8.9, on page 165. When a slave is placed in park state it is assigned a unique PM_ADDR, that can be used by the master to unpark that slave. The all-zero PM_ADDR has a special meaning; it is not a valid PM_ADDR. If a device is assigned this PM_ADDR, it shall be identified with its BD_ADDR when it is unparked by the master.

M/O	PDU	Contents
O(8)	LMP_park_req	timing control flags D_B T_B N_B Δ_B PM_ADDR AR_ADDR N_{Bsleep} D_{Bsleep} D_{access} T_{access} $N_{acc\text{-}slots}$ N_{poll} M_{access} access scheme
O(8)	LMP_set_broadcast_scan_window	timing control flags D_B (optional) broadcast scan window
O(8)	LMP_modify_beacon	timing control flags D_B (optional) T_B N_B Δ_B D_{access} T_{access} $N_{acc\text{-}slots}$ N_{poll} M_{access} access scheme

Table 4.25: PDUs used for park state.

M/O	PDU	Contents
O(8)	LMP_unpark_PM_ADDR_req	timing control flags D_B (optional) LT_ADDR 1st unpark LT_ADDR 2nd unpark PM_ADDR 1st unpark PM_ADDR 2nd unpark LT_ADDR 3rd unpark LT_ADDR 4th unpark PM_ADDR 3rd unpark PM_ADDR 4th unpark LT_ADDR 5th unpark LT_ADDR 6th unpark PM_ADDR 5th unpark PM_ADDR 6th unpark LT_ADDR 7th unpark PM_ADDR 7th unpark
O(8)	LMP_unpark_BD_ADDR _req	timing control flags D_B (optional) LT_ADDR LT_ADDR (optional) BD_ADDR BD_ADDR (optional)

Table 4.25: PDUs used for park state.

4.5.2.1 Master requests slave to enter park state

The master can request park state. The master LM shall pause traffic on the ACL-U logical link (see Baseband Specification, Section 5.3.1, on page 96) and then send an LMP_park_req PDU. If the slave agrees to enter park state it shall pause traffic on the ACL-U logical link (see Baseband Specification, Section 5.3.1, on page 96). and then respond with an LMP_accepted PDU.

When the slave queues an LMP_accepted PDU it shall start a timer for 6*Tpoll slots. If the baseband acknowledgement is received before this timer expires it shall enter park state immediately otherwise it shall enter park state when the timer expires.

When the master receives an LMP_accepted PDU it shall start a timer for 6*Tpoll slots. When this timer expires the slave is in park state and the LT_ADDR may be re-used.

If the master never receives an LMP_accepted PDU then a link supervision timeout will occur.

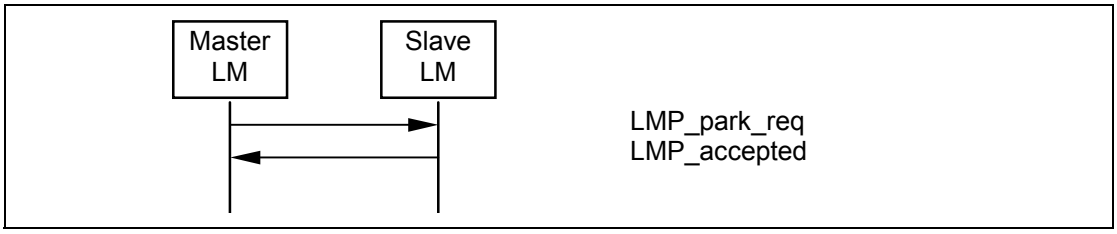

Sequence 50: Slave accepts to enter park state.

If the slave rejects the attempt to enter park state it shall respond with an LMP_not_accepted PDU and the master shall re-enable transmission on the ACL-U logical link.

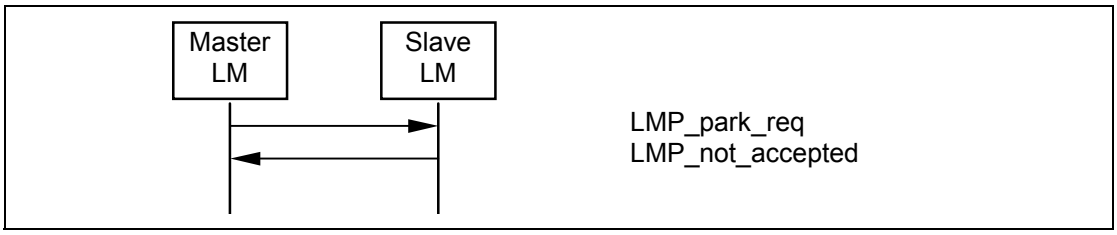

Sequence 51: Slave rejects to enter into park state

4.5.2.2 Slave requests to enter park state

The slave can request park state. The slave LM shall pause traffic on the ACL-U logical link (see Baseband Specification, Section 5.3.1, on page 96) and then send an LMP_park_req PDU. When sent by the slave, the parameters PM_ADDR and AR_ADDR are not valid and the other parameters represent suggested values. If the master accepts the slave's request to enter park state it shall pause traffic on the ACL-U logical link (see Baseband Specification, Section 5.3.1, on page 96) and then send an LMP_park_req PDU, where the parameter values may be different from the values in the PDU sent from the slave. If the slave can accept these parameter it shall respond with an LMP_accepted PDU.

When the slave queues an LMP_accepted PDU for transmission it shall start a timer for 6*Tpoll slots. If the baseband acknowledgement is received before this timer expires it shall enter park state immediately otherwise it shall enter park state when the timer expires.

When the master receives an LMP_accepted PDU it shall start a timer for 6*Tpoll slots. When this timer expires the slave is in park state and the LT_ADDR may be re-used.

If the master never receives the LMP_accepted PDU then a link supervision timeout will occur.

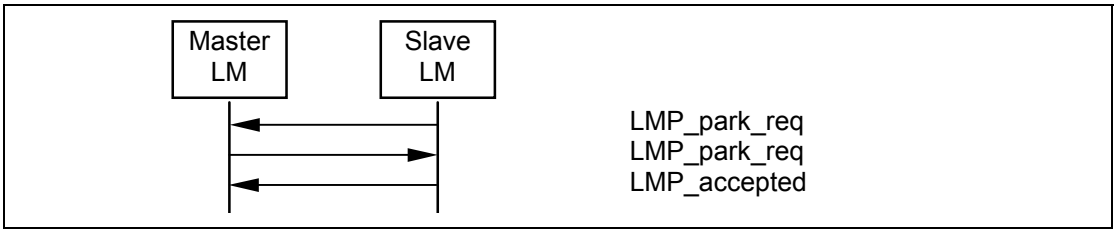

Sequence 52: Slave requests to enter park state and accepts master's beacon parameters.

If the master does not agree that the slave enters park state it shall send an LMP_not_accepted PDU. The slave shall then re-enable transmission on the ACL-U logical link.

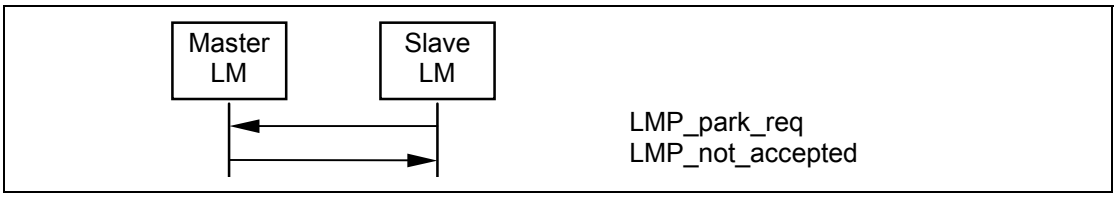

Sequence 53: Master rejects slave's request to enter park state

If the slave does not accept the parameters in the LMP_park_req PDU sent from the master it shall respond with an LMP_not_accepted PDU and both devices shall re-enable transmission on the ACL-U logical link.

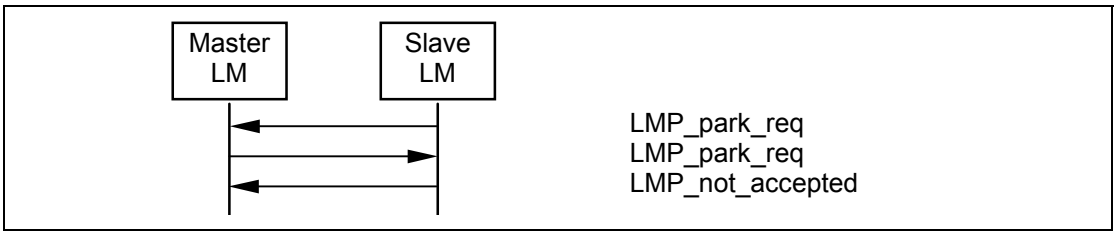

Sequence 54: Slave requests to enter park state, but rejects master's beacon parameters.

4.5.2.3 Master sets up broadcast scan window

If more broadcast capacity is needed than the beacon train, the master may indicate to the slaves that more broadcast information will follow the beacon train by sending an LMP_set_broadcast_scan_window PDU. This message shall be sent in a broadcast packet at the beacon slot(s). The scan window shall start in the beacon instant and shall only be valid for the current beacon.

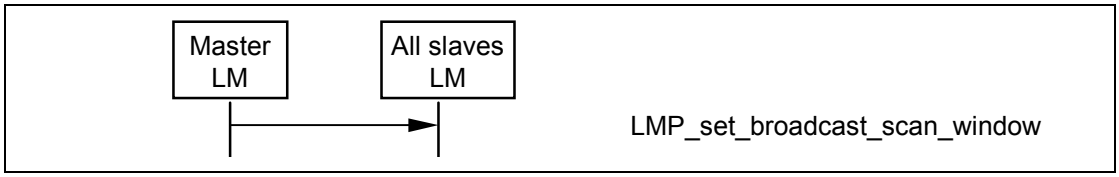

Sequence 55: Master notifies all slaves of increase in broadcast capacity.

4.5.2.4 Master modifies beacon parameters

When the beacon parameters change the master notifies the parked slaves of this by sending an LMP_modify_beacon PDU. This PDU shall be sent in a broadcast packet.

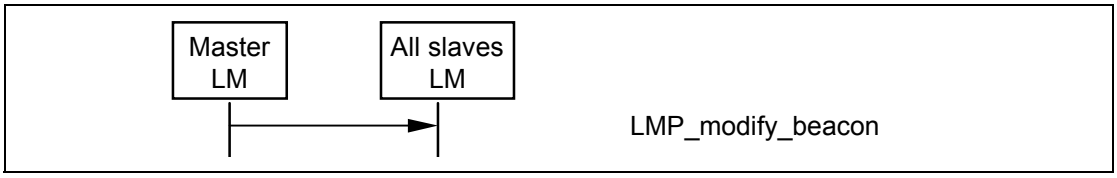

Sequence 56: Master modifies beacon parameters.

4.5.2.5 Unparking slaves

The master can unpark one or many slaves by sending a broadcast LMP message including the PM_ADDR or the BD_ADDR of the device(s) to be unparked. Broadcast LMP messages are carried on the PSB-C logical link. See Baseband Specification, Section 8.9.5, on page 171 for further details. This message also includes the LT_ADDR that the master assigns to the slave(s). After sending this message, the master shall check the success of the unpark by polling each unparked slave by sending POLL packets, so that the slave is granted access to the channel. The unparked slave shall then send a response with an LMP_accepted PDU. If this message is not received from the slave within a certain time after the master sent the unpark message, the unpark failed and the master shall consider the slave as still being in park state.

One PDU is used where the parked device is identified with the PM_ADDR, and another PDU is used where it is identified with the BD_ADDR. Both messages have variable length depending on the number of slaves the master unparks. For each slave the master wishes to unpark an LT_ADDR followed by the PM_ADDR or BD_ADDR of the device that is assigned this LT_ADDR is included in the payload. If the slaves are identified with the PM_ADDR a maximum of 7 slaves can be unparked with the same message. If they are identified with the BD_ADDR a maximum of 2 slaves can be unparked with the same message.

After a successful unparking, both devices re-enable transmission on the ACL-U logical link.

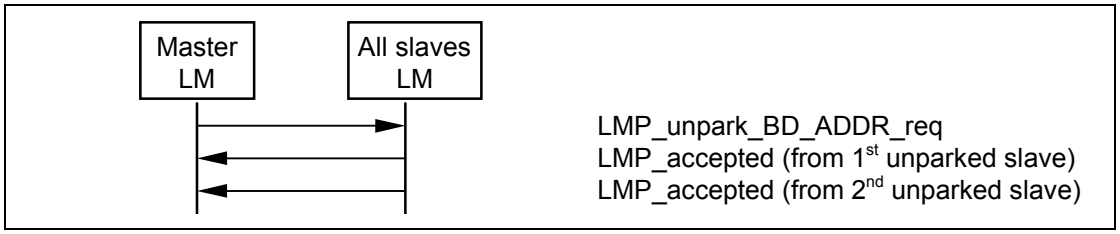

Sequence 57: Master unparks slaves addressed with their BD_ADDR.

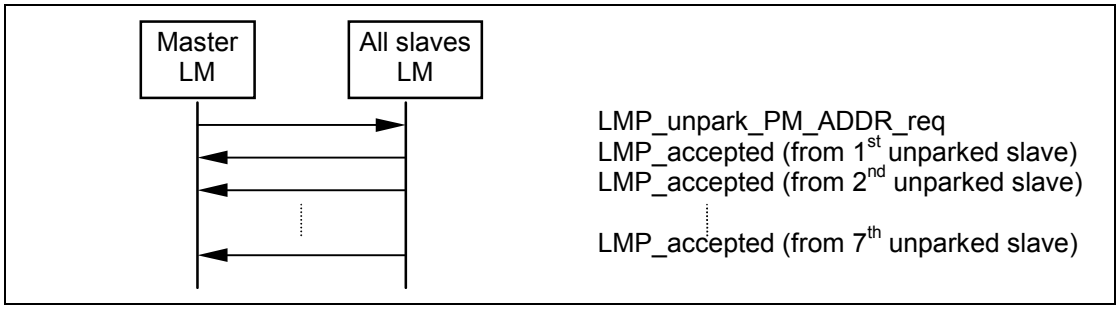

Sequence 58: Master unparks slaves addressed with their PM_ADDR.

4.5.3 Sniff mode

To enter sniff mode, master and slave negotiate a sniff interval T_{sniff} and a sniff offset, D_{sniff}, that specifies the timing of the sniff slots. The offset determines the time of the first sniff slot; after that the sniff slots follow periodically with the sniff interval T_{sniff}. To avoid clock wrap-around during the initialization, one of two options is chosen for the calculation of the first sniff slot. A timing control flag in the message from the master indicates this.Only bit1 of the timing control flag is valid.

When the ACL logical transport is in sniff mode the master shall only start a transmission in the sniff slots. Two parameters control the listening activity in the slave: the sniff attempt and the sniff timeout. The sniff attempt parameter determines for how many slots the slave shall listen when the slave is not treating this as a scatternet link, beginning at the sniff slot, even if it does not receive a packet with its own LT_ADDR. The sniff timeout parameter determines for how many additional slots the slave shall listen when the slave is not treating this as a scatternet link if it continues to receive only packets with its own LT_ADDR. It is not possible to modify the sniff parameters while the device is in sniff mode.

M/O	PDU	Contents
O(7)	LMP_sniff_req	timing control flags D_{sniff} T_{sniff} sniff attempt sniff timeout
O(7)	LMP_unsniff_req	-

Table 4.26: PDUs used for sniff mode.

4.5.3.1 Master or slave requests sniff mode

Either the master or the slave may request entry to sniff mode.

The process is initiated by sending an LMP_sniff_req PDU containing a set of parameters. The receiving LM shall then decide whether to reject the attempt by sending an LMP_not_accepted PDU, to suggest different parameters by replying with an LMP_sniff_req PDU or to accept the request.

Before the first time that the master sends LMP_sniff_req it shall enter sniff transition mode. If the master receives or sends an LMP_not_accepted PDU it shall exit from sniff transition mode. If the master receives an LMP_sniff_req PDU it shall enter sniff transition mode.

If the master decides to accept the request it shall send an LMP_accepted PDU. When the master receives the baseband acknowledgement for this PDU it shall exit sniff transition mode and enter sniff mode.

If the master receives an LMP_accepted PDU the master shall exit from sniff transition mode and enter sniff mode.

If the slave receives an LMP_sniff_req PDU it must decide whether to accept the request. If the slave does not wish to enter sniff mode then it replies with an LMP_not_accepted PDU. If it is happy to enter sniff mode but requires a different set of parameters it shall respond with an LMP_sniff_req PDU containing the new parameters. If the slave decides that the parameters are acceptable then it shall send an LMP_accepted PDU and enter sniff mode. If the slave receives an LMP_not_accepted PDU it shall terminate the attempt to enter sniff mode.

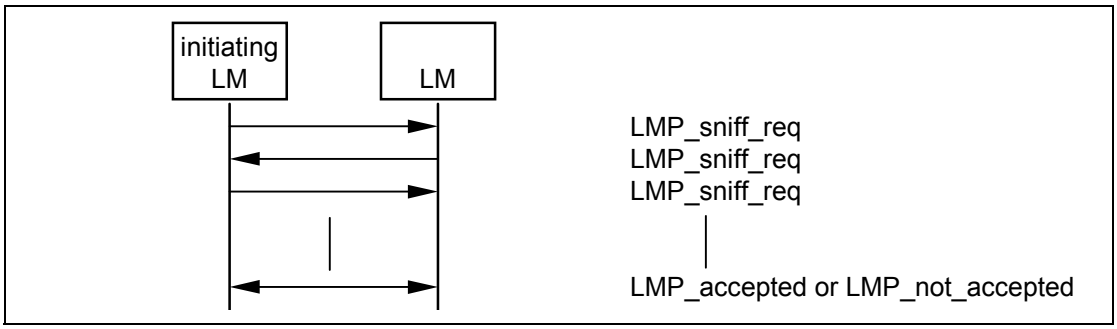

Sequence 59: Negotiation for sniff mode.

4.5.3.2 Moving a slave from sniff mode to active mode

Sniff mode may be exited by either the master or the slave sending an LMP_unsniff_req PDU. The requested device must reply with an LMP_accepted PDU.

If the master requests an exit from Sniff mode it shall enter sniff transition mode and then send an LMP_unsniff_req PDU. When the slave receives the LMP_unsniff_req it shall exit from sniff mode and reply with an LMP_accepted PDU. When the master receives the LMP_accepted PDU it shall exit from sniff transition mode and enter active mode.

If the slave requests an exit from sniff mode it shall send an LMP_unsniff_req PDU. When the master receives the LMP_unsniff_req PDU it shall enter sniff transition mode and then send an LMP_accepted PDU. When the slave receives the LMP_accepted PDU it shall exit from Sniff mode and enter active mode. When the master receives the baseband acknowledgement for the LMP_accepted PDU it shall leave sniff transition mode and enter active mode.

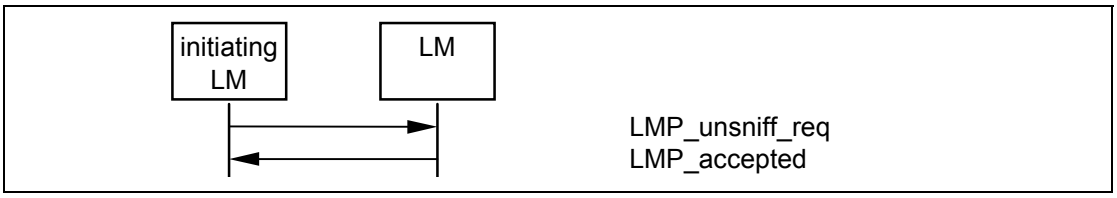

Sequence 60: Slave moved from sniff mode to active mode.

4.6 LOGICAL TRANSPORTS

When a connection is first established between two devices the connection consists of the default ACL logical links: ACL-C (for LMP messages) and ACL-U (for L2CAP data.) One or more synchronous logical transports (SCO or eSCO) may then be added. A new logical transport shall not be created if it would cause all slots to be allocated to reserved slots on secondary LT_ADDRs.

4.6.1 SCO logical transport

The SCO logical transport reserves slots separated by the SCO interval, T_{sco}. The first slot reserved for the SCO logical transport is defined by T_{sco} and the SCO offset, D_{sco}. See Baseband Specification, Section 8.6.2, on page 150 for details. A device shall initiate a request for HV2 or HV3 packet type only if the other device supports it (bits 12, 13) in its features mask. A device shall initiate CVSD, μ-law or A-law coding or uncoded (transparent) data only if the other device supports the corresponding feature. To avoid problems with a wrap-around of the clock during initialization of the SCO logical transport, the timing control flags parameter is used to indicate how the first SCO slot shall be calculated. Only bit1 of the timing control flags parameter is valid. The SCO link is distinguished from all other SCO links by an SCO handle. The SCO handle zero shall not be used.

M/O	PDU	Contents
O(11)	LMP_SCO_link_req	SCO handle timing control flags D_{sco} T_{sco} SCO packet air mode
O(11)	LMP_remove_SCO_link_req	SCO handle error

Table 4.27: PDUs used for managing the SCO links.

4.6.1.1 Master initiates an SCO link

When establishing an SCO link the master sends a request, a LMP_SCO_link_req PDU, with parameters that specify the timing, packet type and coding that will be used on the SCO link. Each of the SCO packet types supports three different voice coding formats on the air-interface: μ-law log PCM, A-law log PCM and CVSD. The air coding by log PCM or CVSD may be deactivated to achieve a transparent synchronous data link at 64 kbits/s.

The slots used for the SCO links are determined by three parameters controlled by the master: T_{sco}, D_{sco} and a flag indicating how the first SCO slot is calculated. After the first slot, the SCO slots follow periodically at an interval of T_{sco}.

If the slave does not accept the SCO link, but is willing to consider another possible set of SCO parameters, it can indicate what it does not accept in the error code field of LMP_not_accepted PDU. The master may then issue a new request with modified parameters.

The SCO handle in the message shall be different from existing SCO link(s).

If the SCO packet type is HV1 the LMP_accepted shall be sent using the DM1 packet.

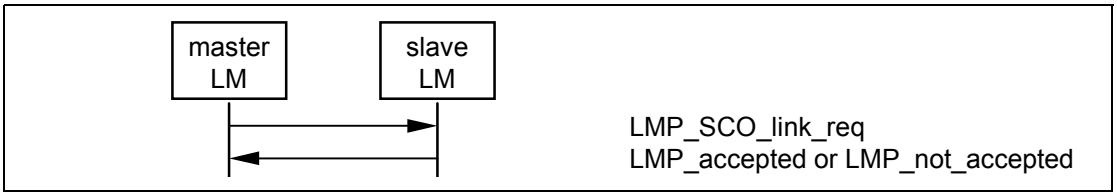

Sequence 61: Master requests an SCO link.

4.6.1.2 Slave initiates an SCO link

The slave may initiate the establishment of an SCO link. The slave sends an LMP_SCO_link_req PDU, but the parameters timing control flags and D_{sco} are invalid as well as the SCO handle, that shall be zero. If the master is not capable of establishing an SCO link, it replies with an LMP_not_accepted PDU. Otherwise it sends back an LMP_SCO_link_req PDU. This message includes the assigned SCO handle, D_{sco} and the timing control flags. The master should try to use the same parameters as in the slave request; if the master cannot meet that request, it is allowed to use other values. The slave shall then reply with LMP_accepted or LMP_not_accepted PDU.

If the SCO packet type is HV1 the LMP_accepted shall be sent using the DM1 packet.

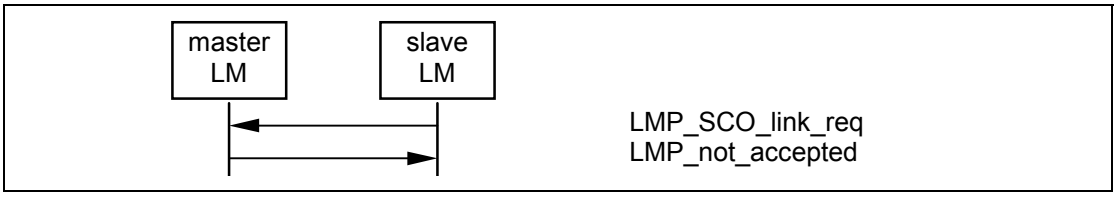

Sequence 62: Master rejects slave's request for an SCO link.

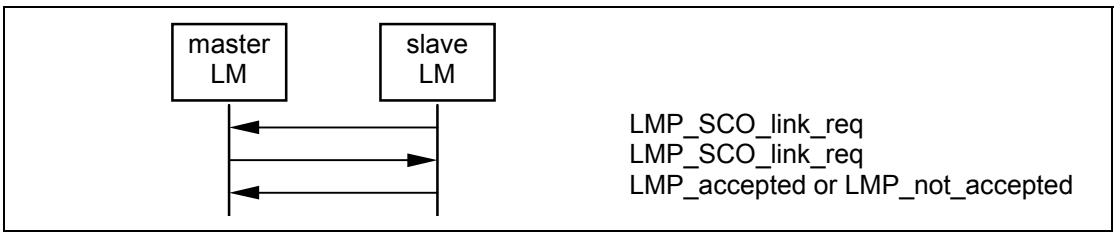

Sequence 63: Master accepts slave's request for an SCO link.

4.6.1.3 Master requests change of SCO parameters

The master sends an LMP_SCO_link_req PDU, where the SCO handle is the handle of the SCO link the master wishes to change parameters for. If the slave accepts the new parameters, it replies with an LMP_accepted PDU and the SCO link will change to the new parameters. If the slave does not accept the new parameters, it shall reply with an LMP_not_accepted PDU and the SCO link is left unchanged. When the slave replies with an LMP_not_accepted PDU it shall indicate in the error code parameter what it does not accept. The master may then try to change the SCO link again with modified parameters. The sequence is the same as in Section 4.6.1.1 on page 256.

4.6.1.4 Slave requests change of SCO parameters

The slave sends an LMP_SCO_link_req PDU, where the SCO handle is the handle of the SCO link to be changed. The parameters timing control flags and D_{sco} are not valid in this PDU. If the master does not accept the new parameters it shall reply with an LMP_not_accpeted PDU and the SCO link is left unchanged. If the master accepts the new parameters it shall reply with an LMP_SCO_link_req PDU containing the same parameters as in the slave request. When receiving this message the slave replies with an LMP_not_accepted PDU if it does not accept the new parameters. The SCO link is then left unchanged. If the slave accepts the new parameters it replies with an LMP_accepted PDU and the SCO link will change to the new parameters. The sequence is the same as in Section 4.6.1.2 on page 257.

4.6.1.5 Remove an SCO link

Master or slave can remove the SCO link by sending a request including the SCO handle of the SCO link to be removed and an error code indicating why the SCO link is removed. The receiving side shall respond with an LMP_accepted PDU.

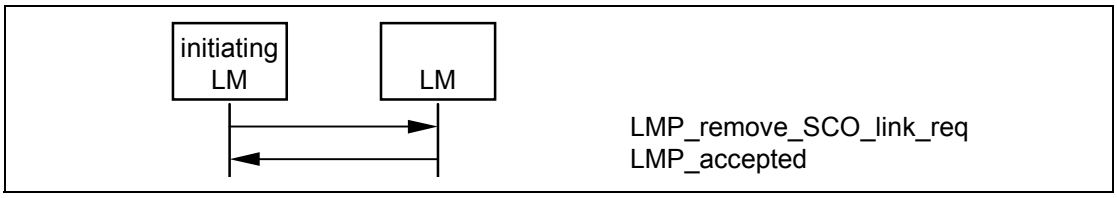

Sequence 64: SCO link removed.

4.6.2 eSCO logical transport

After an ACL link has been established, one or more extended SCO (eSCO) links can be set up to the remote device. The eSCO links are similar to SCO links using timing control flags, an interval T_{eSCO} and an offset D_{eSCO}. Only bit1 of the timing control flags parameter is valid. As opposed to SCO links, eSCO links have a configurable data rate that may be asymmetric, and can be set up to provide limited retransmissions of lost or damaged packets inside a retransmission window of size W_{eSCO}. The D_{eSCO} shall be based on CLK.

M/O	PDU	Contents
O(31)	LMP_eSCO_link_req	eSCO handle eSCO LT_ADDR timing control flags D_{eSCO} T_{eSCO} W_{eSCO} eSCO packet type M->S eSCO packet type S->M packet length M->S packet length S->M air mode negotiation state
O(31)	LMP_remove_eSCO_link_req	eSCO handle error

Table 4.28: PDUs used for managing the eSCO links

The parameters D_{eSCO}, T_{eSCO}, W_{eSCO}, eSCO packet type M->S, eSCO packet type S->M, packet length M->S, packet length S->M are henceforth referred to as the negotiable parameters.

4.6.2.1 Master initiates an eSCO link

When establishing an eSCO link the master sends an LMP_eSCO_link_req PDU specifying all parameters. The slave may accept this with an LMP_accepted_ext PDU, reject it with an LMP_not_accepted_ext PDU, or respond with its own LMP_eSCO_link_req specifying alternatives for some or all parameters. The slave shall not negotiate the eSCO handle or eSCO LT_ADDR parameters. The negotiation of parameters continues until the master or slave either accepts the latest parameters with an LMP_accepted_ext PDU, or terminates the negotiation with an LMP_not_accepted_ext PDU. The negotiation shall use the procedures defined in Section 4.6.2.5 on page 262.

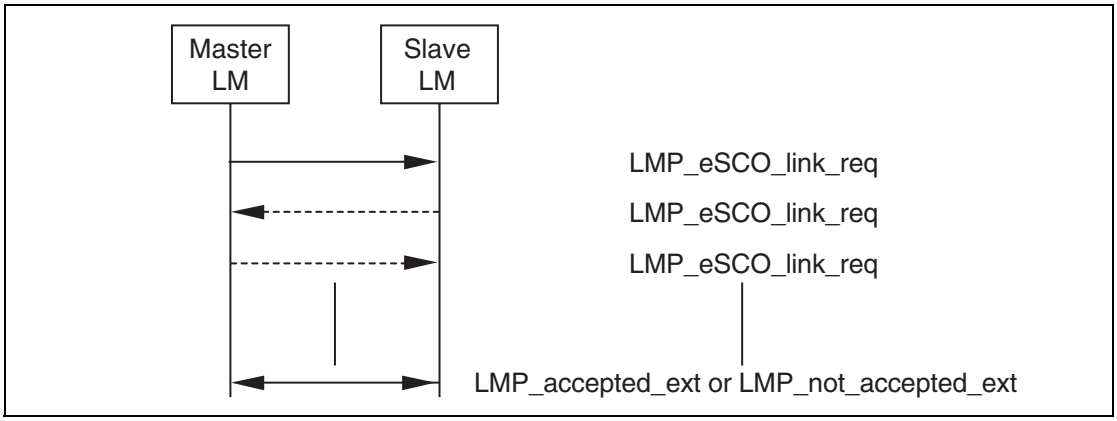

Sequence 65: Master requests an eSCO link.

4.6.2.2 Slave initiates an eSCO link

When attempting to establish an eSCO link the slave shall send an LMP_eSCO_link_req PDU specifying all parameters, with the exception of eSCO LT_ADDR and eSCO handle, which are invalid. The latter shall be set to zero. The master may respond to this with an LMP_eSCO_link_req PDU, filling in these missing parameters, and potentially changing the other requested parameters. The slave can accept this with an LMP_accepted_ext PDU, or respond with a further LMP_eSCO_link_req PDU specifying alternatives for some or all of the parameters. The negotiation of parameters continues until the master or slave either accepts the latest parameters with an LMP_accepted_ext PDU, or terminates the negotiation with an LMP_not_accepted_ext PDU.

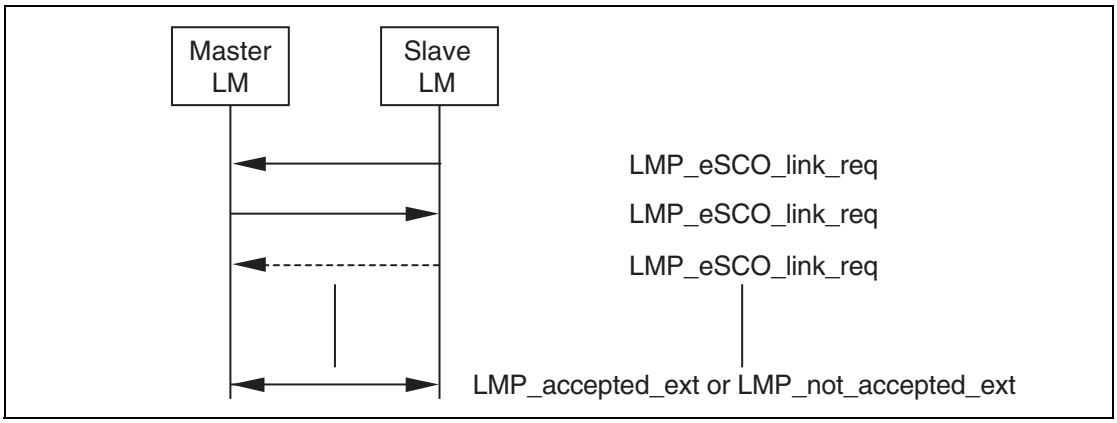

Sequence 66: Slave requests an eSCO link.

The master may reject the request immediately with an LMP_not_accepted_ext PDU. The negotiation shall use the procedures defined in Section 4.6.2.5 on page 262.

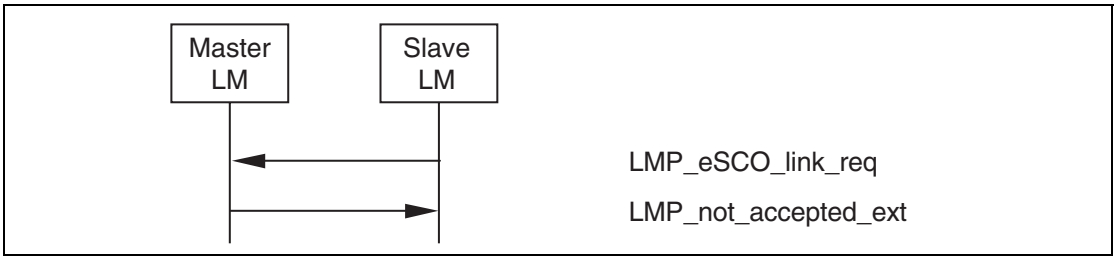

Sequence 67: Master rejects slave's request for an eSCO link.

4.6.2.3 Master or slave requests change of eSCO parameters

The master or slave may request a renegotiation of the eSCO parameters. The master or slave shall send an LMP_eSCO_link_req PDU with the eSCO handle of the eSCO link the device wishes to renegotiate. The remote device may accept the changed parameters immediately with LMP_accepted_ext PDU, or the negotiation may be continued with further LMP_eSCO_link_req PDUs until the master or slave accepts the latest parameters with an LMP_accepted_ext PDU or terminates the negotation with an LMP_not_accepted_ext PDU. In the case of termination with an LMP_not_accepted_ext PDU, the eSCO link continues on the previously negotiated parameters.

The sequence is the same as in Section 4.6.2.2 on page 260.

During re-negotiation, the eSCO LT_ADDR and eSCO handle shall not be re-negotiated and shall be set to the originally negotiated values. The negotiation shall use the procedures defined in Section 4.6.2.5 on page 262.

4.6.2.4 Remove an eSCO link

Either the master or slave may remove the eSCO link by sending a request including the eSCO handle of the eSCO link to be removed and a error code indicating why the eSCO link is removed. The receiving side shall respond with an LMP_accepted_ext PDU.

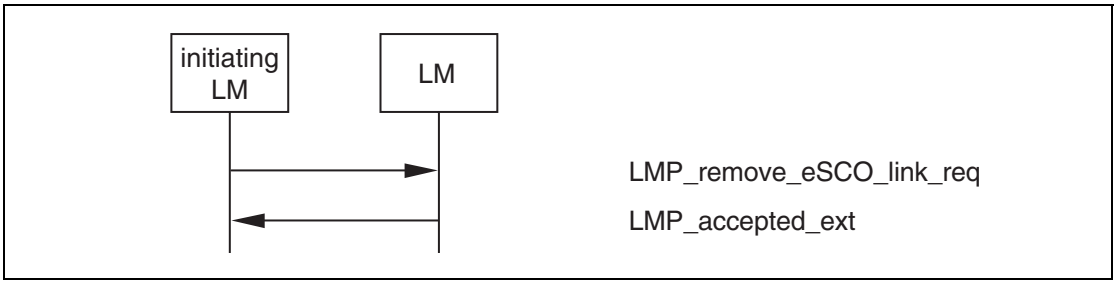

Sequence 68: eSCO link removed

4.6.2.5 Rules for the LMP negotiation and renegotiation

Rule 1: the negotiation_state shall be set to 0 by the initiating LM. After the initial LMP_eSCO_link_req is sent the negotiation_state shall not be set to 0.

Rule 2: if the bandwidth (defined as 1600 times the packet length in bytes divided by T_{eSCO} in slots) for either RX or TX or the air_mode cannot be accepted the device shall send LMP_not_accepted_ext with the appropriate error code.

Rule 3: Bandwidth and air_mode are not negotiable and shall not be changed for the duration of the negotiation. Once one side has rejected the negotiation (with LMP_not_accepted_ext) a new negotiation may be started with different bandwidth and air_mode parameters.

Rule 4: if the parameters will cause a latency violation (T_{eSCO} + W_{eSCO} + reserved synchronous slots > allowed local latency) the device should propose new parameters that shall not cause a reserved slot violation or latency violation for the device that is sending the parameters. In this case the negotiation_state shall be set to 3. Otherwise the device shall send LMP_not_accepted_ext.

Rule 5: once a device has received an LMP_eSCO_link_req with the negotiation_state set to 3 (latency violation), the device shall not propose any combination of packet type, T_{eSCO}, and W_{eSCO} that will give an equal or larger latency than the combination that caused the latency violation for the other device.

Rule 6: if the parameters cause both a reserved slot violation and a latency violation the device shall set the negotiation_state to 3 (latency violation).

Rule 7: if the parameters will cause a reserved slot violation the device should propose new parameters that shall not cause a reserved slot violation. In this case the negotiation_state shall be set to 2. Otherwise the device shall send LMP_not_accepted_ext.

Rule 8: If the requested parameters are not supported the device should propose a setting that is supported, and set the negotiation_state to 4. If it is not possible to find such a parameter set, the device shall send LMP_not_accepted_ext.

Rule 9: when proposing new parameters for reasons other than a latency violation, reserved slot violation, or configuration not supported, the negotiation_state shall be set to 1.

4.6.2.6 Negotiation state definitions

Reserved Slot Violation: a reserved slot violation is when the receiving LM cannot setup the requested eSCO logical transport because the eSCO reserved slots would overlap with other regularly scheduled slots (e.g. other synchronous reserved slots, sniff instants, or park beacons).

Latency Violation: a latency violation is when the receiving LM cannot setup the requested eSCO logical transport because the latency (W_{eSCO}+T_{eSCO} + reserved synchronous slots) is greater than the maximum allowed latency.

Configuration not supported: The combination of parameters requested is not inside the supported range for the device.

4.7 TEST MODE

LMP has PDUs to support different test modes used for certification and compliance testing of the Bluetooth radio and baseband. See "Test Methodology" on page 233[vol. 3] for a detailed description of these test modes.

4.7.1 Activation and deactivation of test mode

The activation may be carried out locally (via a HW or SW interface), or using the air interface.

- For activation over the air interface, entering the test mode shall be locally enabled for security and type approval reasons. The implementation of this local enabling is not subject to standardization.

  The tester sends an LMP command that shall force the DUT to enter test mode. The DUT shall terminate all normal operation before entering the test mode.

  The DUT shall return an LMP_Accepted on reception of an activation command. LMP_Not_Accepted shall be returned if the DUT is not locally enabled.
- If the activation is performed locally using a HW or SW interface, the DUT shall terminate all normal operation before entering the test mode.

  Until a connection to the tester exists, the device shall perform page scan and inquiry scan. Extended scan activity is recommended.

The test mode is activated by sending an LMP_test_activate PDU to the device under test (DUT). The DUT is always the slave. The lm shall be able to receive this message anytime. If entering test mode is locally enabled in the DUT it shall respond with an LMP_accepted PDU and test mode is entered. Otherwise the DUT responds with an LMP_not_accepted PDU and the DUT remains in normal operation. The error code in the LMP_not_accepted PDU shall be *PDU not allowed*.

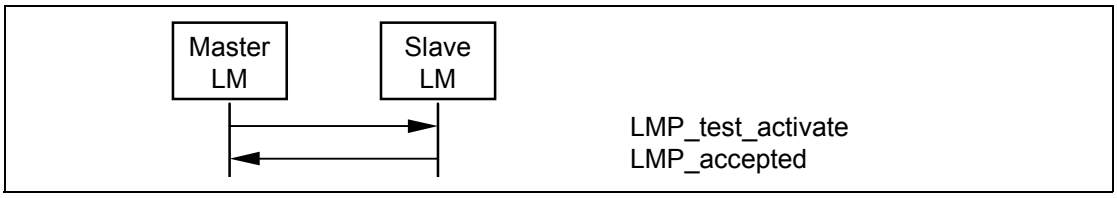

Sequence 69: Activation of test mode successful.

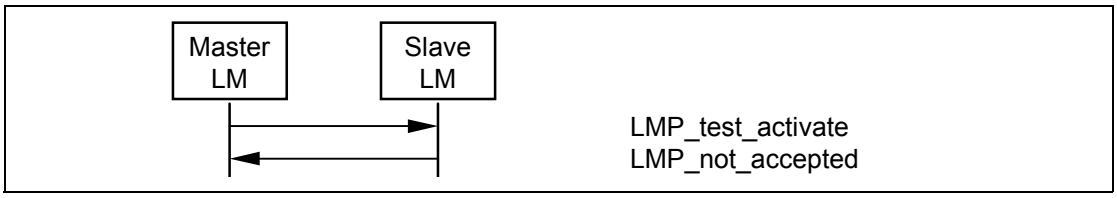

Sequence 70: Activation of test mode fails. Slave is not allowed to enter test mode.

The test mode can be deactivated in two ways. Sending an LMP_test_control PDU with the test scenario set to "exit test mode" exits the test mode and the slave returns to normal operation still connected to the master. Sending an LMP_detach PDU to the DUT ends the test mode and the connection.

4.7.2 Control of test mode

Control and configuration is performed using special LMP commands (see Section 4.7.3 on page 266). These commands shall be rejected if the Bluetooth device is not in test mode. In this case, an LMP_not_accepted shall be returned. The DUT shall return an LMP_accepted on reception of a control command when in test mode.

A Bluetooth device in test mode shall ignore all LMP commands not related to control of the test mode. LMP commands dealing with power control and the request for LMP features (LMP_features_req), and adaptive frequency hopping (LMP_set_AFH, LMP_channel_classification_req and LMP_channel_classification) are allowed in test mode; the normal procedures are also used to test the adaptive power control.

The DUT shall leave the test mode when an LMP_Detach command is received or an LMP_test_control command is received with test scenario set to ’exit test mode’.

When the DUT has entered test mode, the PDU LMP_test_control PDU can be sent to the DUT to start a specific test. This PDU is acknowledged with an LMP_accepted PDU. If a device that is not in test mode receives an LMP_test_control PDU it responds with an LMP_not_accepted PDU, where the error code shall be *PDU not allowed*.

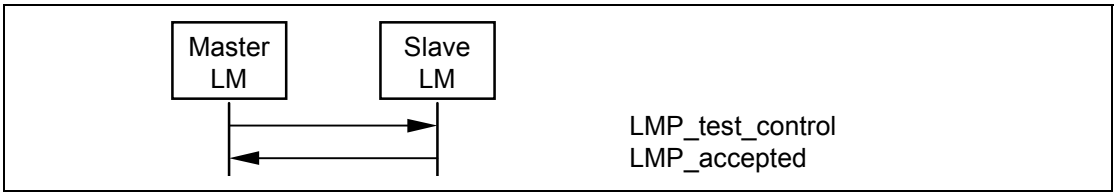

Sequence 71: Control of test mode successful.

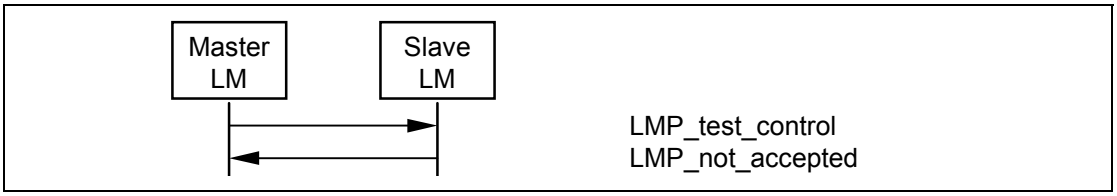

Sequence 72: Control of test mode rejected since slave is not in test mode.

4.7.3 Summary of test mode PDUs

Table 4.29 lists all LMP messages used for test mode. To ensure that the contents of LMP_test_control PDU are suitably whitened (important when sent in transmitter mode), all parameters listed in Table 4.30 on page 266 are XORed with 0x55 before being sent.

LMP PDU	PDU number	Possible Direction	Contents	Position in Payload
LMP_test_activate	56	m → s		
LMP_test_control	57	m → s	test scenario hopping mode TX frequency RX frequency power control mode poll period packet type length of test data	2 3 4 5 6 7 8 9-10
LMP_detach	7	m → s		
LMP_accepted	3	m ← s		
LMP_not_accepted	4	m ← s		

Table 4.29: LMP messages used for Test Mode

Name	Length (bytes)	Type	Unit	Detailed
Test scenario	1	u_int8		0 Pause Test Mode 1 Transmitter test – 0 pattern 2 Transmitter test – 1 pattern 3 Transmitter test – 1010 pattern 4 Pseudorandom bit sequence 5 Closed Loop Back – ACL packets 6 Closed Loop Back – Synchronous packets 7 ACL Packets without whitening 8 Synchronous Packets without whitening 9 Transmitter test – 1111 0000 pattern 10–254 reserved 255 Exit Test Mode The value is XORed with 0x55.

Table 4.30: Parameters used in LMP_Test_Control PDU

Name	Length (bytes)	Type	Unit	Detailed
Hopping mode	1	u_int8		0 RX/TX on single frequency 1 Normal hopping 2 Reserved 3 Reserved 4 Reserved 5–255 reserved The value is XORed with 0x55.
TX frequency (for DUT)	1	u_int8		f = [2402 + k] MHz The value is XORed with 0x55.
RX frequency (for DUT)	1	u_int8		f = [2402 + k] MHz The value is XORed with 0x55.
Power control mode	1	u_int8		0 fixed TX output power 1 adaptive power control The value is XORed with 0x55.
Poll period	1	u_int8	1.25 ms	The value is XORed with 0x55.
Packet type	1	u_int8		Bits 3:0 numbering as in packet header, see Baseband Specification Bits 7:4 0 : ACL/SCO 1 : eSCO 2-15 : reserved The value is XORed with 0x55.
length of test sequence (=length of user data in Baseband Specification)	2	u_int16	1 byte	unsigned binary number The value is XORed with 0x5555.

Table 4.30: Parameters used in LMP_Test_Control PDU

The control PDU is used for both transmitter and loop back tests. The following restrictions apply for the parameter settings:

Parameter	**Restrictions Transmitter Test**	**Restrictions Loopback Test**
TX frequency	$0 \leq k \leq 93$	$0 \leq k \leq 78$
RX frequency	same as TX frequency	$0 \leq k \leq 78$
Poll period		not applicable (set to 0)
Length of test sequence	depends on packet type: DH1: <= 27 bytes DH3: <= 183 bytes DH5: <= 339 bytes AUX1: <= 29 bytes HV3: = 30 bytes EV3: <= 30 bytesEV5: <= 180 bytes	For ACL and SCO packets: not applicable (set to 0) For eSCO packets: EV3: <= 1-30 bytes EV4: <= 1-120 bytes EV5: <= 1-180 bytes

Table 4.31: Restrictions for Parameters used in LMP_Test_Control PDU

5 SUMMARY

5.1 PDU SUMMARY

LMP PDU	Length (bytes)	op code	Packet type	Possible direction	Contents	Position in payload
Escape 1	variable	124	DM1	m ↔ s	extended op code	2
					variable	3-?
Escape 2	variable	125	DM1	m ↔ s	extended op code	2
					variable	3-?
Escape 3	variable	126	DM1	m ↔ s	extended op code	2
					variable	3-?
Escape 4	variable	127	DM1	m ↔ s	extended op code	2
					variable	3-?
LMP_accepted	2	3	DM1/ DV	m ↔ s	op code	2
LMP_accepted_ext	4	127/ 01	DM1	m ↔ s	escape op code	3
					extended op code	4
LMP_au_rand	17	11	DM1	m ↔ s	random number	2-17
LMP_auto_rate	1	35	DM1/ DV	m ↔ s	-	
LMP_channel _classification_req	7	127/ 16	DM1	m → s	AFH_reporting_mode	3
					AFH_min_interval	4-5
					AFH_max_interval	6-7
LMP_channel _classification	12	127/ 17	DM1	m ← s	AFH_channel_ classification	3 – 12
LMP_clkoffset_req	1	5	DM1/ DV	m → s	-	
LMP_clkoffset_res	3	6	DM1/ DV	m ← s	clock offset	2–3
LMP_comb_key	17	9	DM1	m ↔ s	random number	2-17
LMP_decr_power_req	2	32	DM1/ DV	m ↔ s	for future use	2
LMP_detach	2	7	DM1/ DV	m ↔ s	error code	2

Table 5.1: Coding of the different LM PDUs.

LMP PDU	Length (bytes)	op code	Packet type	Possible direction	Contents	Position in payload
LMP_encryption_key _size_mask_req	1	58	DM1	m → s		
LMP_encryption_key _size_mask_res	3	59	DM1	m ← s	key size mask	2-3
LMP_encryption_key_size _req	2	16	DM1/ DV	m ↔ s	key size	2
LMP_encryption_mode_ req	2	15	DM1/ DV	m ↔ s	encryption mode	2
LMP_eSCO_link_req	16	127/ 12	DM1	m↔s	eSCO handle	3
					eSCO LT_ADDR	4
					timing control flags	5
					D_{eSCO}	6
					T_{eSCO}	7
					W_{eSCO}	8
					SCO packet type M->S	9
					SCO packet type S->M	10
					packet length M->S	11-12
					packet length S->M	13-14
					air mode	15
					negotiation state	16
LMP_features_req	9	39	DM1/ DV	m ↔ s	features	2-9
LMP_features_req_ext	12	127/ 03	DM1	m ↔ s	features page	3
					max supported page	4
					extended features	5-12
LMP_features_res	9	40	DM1/ DV	m ↔ s	features	2-9
LMP_features_res_ext	12	127/ 04	DM1	m ↔ s	features page	3
					max supported page	4
					extended features	5-12
LMP_host_connection_req	1	51	DM1/ DV	m ↔ s	-	

Table 5.1: Coding of the different LM PDUs.

LMP PDU	Length (bytes)	op code	Packet type	Possible direction	Contents	Position in payload
LMP_hold	7	20	DM1/ DV	m ↔ s	hold time	2-3
					hold instant	4-7
LMP_hold_req	7	21	DM1/ DV	m ↔ s	hold time	2-3
					hold instant	4-7
LMP_incr_power_req	2	31	DM1/ DV	m ↔ s	for future use	2
LMP_in_rand	17	8	DM1	m ↔ s	random number	2-17
LMP_max_power	1	33	DM1/ DV	m ↔ s	-	
LMP_max_slot	2	45	DM1/ DV	m ↔ s	max slots	2
LMP_max_slot_req	2	46	DM1/ DV	m ↔ s	max slots	2
LMP_min_power	1	34	DM1/ DV	m ↔ s	-	
LMP_modify_beacon	11 or 13	28	DM1	m → s	timing control flags	2
					D_B	3-4
					T_B	5-6
					N_B	7
					Δ_B	8
					D_{access}	9
					T_{access}	10
					$N_{acc\text{-}slots}$	11
					N_{poll}	12
					M_{access}	13:0-3
					access scheme	13:4-7
LMP_name_req	2	1	DM1/ DV	m ↔ s	name offset	2
LMP_name_res	17	2	DM1	m ↔ s	name offset	2
					name length	3
					name fragment	4-17

Table 5.1: Coding of the different LM PDUs.

LMP PDU	Length (bytes)	op code	Packet type	Possible direction	Contents	Position in payload
LMP_not_accepted	3	4	DM1/ DV	m ↔ s	op code	2
					error code	3
LMP_not_accepted_ext	5	127/ 02	DM1	m ↔ s	escape op code	3
					extended op code	4
					error code	5
LMP_page_mode_req	3	53	DM1/ DV	m ↔ s	paging scheme	2
					paging scheme settings	3
LMP_page_scan_mode _req	3	54	DM1/ DV	m ↔ s	paging scheme	2
					paging scheme settings	3
LMP_park_req	17	25	DM1	m ↔ s	timing control flags	2
					D_B	3-4
					T_B	5-6
					N_B	7
					Δ_B	8
					PM_ADDR	9
					AR_ADDR	10
					N_{Bsleep}	11
					D_{Bsleep}	12
					D_{access}	13
					T_{access}	14
					$N_{acc\text{-}slots}$	15
					N_{poll}	16
					M_{access}	17:0-3
					access scheme	17:4-7
LMP_preferred_rate	2	36	DM1/ DV	m ↔ s	data rate	2
LMP_quality_of_service	4	41	DM1/ DV	m → s	poll interval	2-3
					N_{BC}	4
LMP_quality_of_service_ req	4	42	DM1/ DV	m ↔ s	poll interval	2-3
					N_{BC}	4

Table 5.1: Coding of the different LM PDUs.

LMP PDU	Length (bytes)	op code	Packet type	Possible direction	Contents	Position in payload
LMP_remove_eSCO_link_req [] see Note4 on page 276	4	127/ 13	DM1	m↔s	eSCO handle	3
					error code	4
LMP_remove_SCO_link_req	3	44	DM1/ DV	m ↔ s	SCO handle	2
					error code	3
LMP_SCO_link_req	7	43	DM1/ DV	m ↔ s	SCO handle	2
					timing control flags	3
					D_{sco}	4
					T_{sco}	5
					SCO packet	6
					air mode	7
LMP_set_AFH	16	60	DM1	m → s	AFH_instant	2-5
					AFH_mode	6
					AFH_channel_map	7-16
LMP_set_broadcast_scan_window	4 or 6	27	DM1	m → s	timing control flags	2
					D_B	3-4
					broadcast scan window	5-6
LMP_setup_complete	1	49	DM1	m ↔ s	-	
LMP_slot_offset	9	52	DM1/ DV	m ↔ s	slot offset	2-3
					BD_ADDR	4-9
LMP_sniff_req	10	23	DM1	m ↔ s	timing control flags	2
					D_{sniff}	3-4
					T_{sniff}	5-6
					sniff attempt	7-8
					sniff timeout	9-10
LMP_sres	5	12	DM1/ DV	m ↔ s	authentication response	2-5
LMP_start_encryption_req	17	17	DM1	m → s	random number	2-17
LMP_stop_encryption_req	1	18	DM1/ DV	m → s	-	
LMP_supervision_timeout	3	55	DM1/ DV	m →s	supervision timeout	2-3

Table 5.1: Coding of the different LM PDUs.

LMP PDU	Length (bytes)	op code	Packet type	Possible direction	Contents	Position in payload
LMP_switch_req	5	19	DM1/ DV	m ↔ s	switch instant	2-5
LMP_temp_rand	17	13	DM1	m → s	random number	2-17
LMP_temp_key	17	14	DM1	m → s	key	2-17
LMP_test_activate	1	56	DM1/ DV	m → s	-	
LMP_test_control	10	57	DM1	m → s	test scenario	2
					hopping mode	3
					TX frequency	4
					RX frequency	5
					power control mode	6
					poll period	7
					packet type	8
					length of test data	9-10
LMP_timing_accuracy_req	1	47	DM1/ DV	m ↔ s	-	
LMP_timing_accuracy_res	3	48	DM1/ DV	m ↔ s	drift	2
					jitter	3
LMP_unit_key	17	10	DM1	m ↔ s	key	2-17
LMP_unpark_BD_ADDR _req	variable	29	DM1	m → s	timing control flags	2
					D_B	3-4
					LT_ADDR 1st unpark	5:0-2
					LT_ADDR 2nd unpark	5:4-6
					BD_ADDR 1st unpark	6-11
					BD_ADDR 2nd unpark	12-17

Table 5.1: Coding of the different LM PDUs.

LMP PDU	Length (bytes)	op code	Packet type	Possible direction	Contents	Position in payload
LMP_unpark_PM_ADDR_req	variable	30	DM1	m → s	timing control flags	2
					D_B	3-4
					LT_ADDR 1st unpark	5:0-3
					LT_ADDR 2nd unpark	5:4-7
					PM_ADDR 1st unpark	6
					PM_ADDR 2nd unpark	7
					LT_ADDR 3rd unpark	8:0-3
					LT_ADDR 4th unpark	8:4-7
					PM_ADDR 3rd unpark	9
					PM_ADDR 4th unpark	10
					LT_ADDR 5th unpark	11:0-3
					LT_ADDR 6th unpark	11:4-7
					PM_ADDR 6th unpark	12
					PM_ADDR 6th unpark	13
					LT_ADDR 7th unpark	14:0-3
					PM_ADDR 7th unpark	15
LMP_unsniff_req	1	24	DM1/DV	m ↔ s	-	
LMP_use_semi_permanent_key	1	50	DM1/DV	m → s	-	
LMP_version_req	6	37	DM1/DV	m ↔ s	VersNr	2
					CompId	3-4
					SubVersNr	5-6
LMP_version_res	6	38	DM1/DV	m ↔ s	VersNr	2
					CompId	3-4
					SubVersNr	5-6

Table 5.1: Coding of the different LM PDUs.

Note1: For LMP_set_broadcast_scan_window, LMP_modify_beacon, LMP_unpark_BD_ADDR_req and LMP_unpark_PM_ADDR_req the parameter D_B is optional. This parameter is only present if bit0 of *timing control flags* is 1.

If the parameter is not included, the position in payload for all parameters following D_B are decreased by 2.

Note2: For LMP_unpark_BD_ADDR the LT_ADDR and the BD_ADDR of the 2nd unparked slave are optional. If only one slave is unparked *LT_ADDR 2nd unpark* shall be zero and *BD_ADDR 2nd unpark* is left out.

Note3: For LMP_unpark_PM_ADDR the LT_ADDR and the PM_ADDR of the 2nd – 7th unparked slaves are optional. If N slaves are unparked, the fields up to and including the Nth unparked slave are present. If N is odd, the *LT_ADDR $(N+1)^{th}$ unpark* shall be zero. The length of the message is x + 3N/2 if N is even and x + 3(N+1)/2 -1 if N is odd, where x = 2 or 4 depending on if the D_B is incluDed Or Not (See Note1).

Note4: Parameters coincide with their namesakes in LMP_<remove>_SCO_link_req apart from the following:

1. eSCO_LT_ADDR - the eSCO connection will be active on an additional LT_ADDR that needs to be defined. The master is allowed to re-assign an active eSCO link to a different LT_ADDR.
2. D_{eSCO}, T_{eSCO} - as per LMP_SCO_link_req but with a greater flexibility in values (e.g. no longer fixed with respect to HV1, HV2, and HV3 packet choice).
3. W_{eSCO} - the eSCO retransmission window size (in slots)
4. packet type and packet length may be prescribed differently in Master-to-Slave or Slave-to-Master directions for asynchronous eSCO links
5. packet length (in bytes) - eSCO packet types no longer have fixed length
6. negotiation state – this is used to better enable the negotiation of the negotiable parameters: D_{eSCO}, T_{eSCO}, W_{eSCO}, eSCO packet type M->S, eSCO packet type S->M, packet length M->S, packet length S->M. When responding to an eSCO link request with a new suggestion for these parameters, this flag may be set to 1 to indicate that the last received negotiable parameters are possible, but the new parameters specified in the response eSCO link request would be preferable, to 2 to indicate that the last received negotiable parameters are not possible as they cause a reserved slot violation or to 3 to indicate that the last received negotiable parameters would cause a latency violation. The flag shall be set to zero in the initiating LMP_eSCO_link_req.

5.2 PARAMETER DEFINITIONS

Name	Length (bytes)	Type	Unit	Detailed	Mandatory range
access scheme	1	u_int4		0: polling technique 1-15: Reserved	
AFH_channel _classification	10	multiple bytes	-	This parameter contains 40 2-bit fields. The nth (numbering from 0) such field defines the classification of channels *2n* and *2n+1*, other than the 39th field which just contains the classification of channel 78. Each field interpreted as an integer whose values indicate: 0 = unknown 1 = good 2 = reserved 3 = bad	
AFH_channel _map	10	multiple bytes	-	If *AFH_mode* is *AFH_enabled*, this parameter contains 79 1-bit fields, otherwise the contents are reserved. The nth (numbering from 0) such field (in the range 0 to 78) contains the value for channel *n*. Bit 79 is reserved (set to 0 when transmitted and ignored when received) The 1-bit field is interpreted as follows: 0: channel *n* is unused 1: channel *n* is used	
AFH_instant	4	u_int32	slots	Bits 27:1 of the Bluetooth master clock value at the time of switching hop sequences. Must be even.	
AFH_max_interval	2	u_int16	slots	Range is 0x0640 to 0xBB80 slots (1 to 30s)	
AFH_min_interval	2	u_int16	slots	Range is 0x0640 to 0xBB80 slots (1 to 30s)	

Table 5.2: Parameters in LM PDUs.

Name	Length (bytes)	Type	Unit	Detailed	Mandatory range
AFH_mode	1	u_int8	-	0: AFH_disabled 1: AFH_enabled 2-255: Reserved	
AFH_reporting_mode	1	u_int8	-	0: AFH_reporting_disabled 1: AFH_reporting_enabled 2-255: reserved	
air mode	1	u_int8		0: µ-law log 1: A-law log 2: CVSD 3: transparent data 4-255: Reserved	See Table 5.3 on page 283
AR_ADDR	1	u_int8			
authentication response	4	multiple bytes			
BD_ADDR	6	multiple bytes		BD_ADDR of the sending device	
broadcast scan window	2	u_int16	slots		
clock offset	2	u_int16	1.25ms	($CLKN_{16-2}$ slave - $CLKN_{16-2}$ master) mod 2^{15} MSbit of second byte not used.	
CompId	2	u_int16		see Bluetooth Assigned Numbers (https://www.bluetooth.org/foundry/assignnumb/document/assigned_numbers)	
D_{access}	1	u_int8	slots		
data rate	1	u_int8		bit0 = 0: use FEC bit0 = 1: do not use FEC bit1-2=0: No packet-size preference available bit1-2=1: use 1-slot packets bit1-2=2: use 3-slot packets bit1-2=3: use 5-slot packets bit3-7: Reserved	

Table 5.2: Parameters in LM PDUs.

Name	Length (bytes)	Type	Unit	Detailed	Mandatory range
D_B	2	u_int16	slots		
Δ_B	1	u_int8	slots		
D_{Bsleep}	1	u_int8			
D_{eSCO}	1	u_int8	slots	Valid range is 0 - 254 slots	See Table 5.3 on page 283
drift	1	u_int8	ppm		
D_{sco}	1	u_int8	slots	Only even values are valid[1]	0 to T_{sco} -2
D_{sniff}	2	u_int16	slots	Only even values are valid[1]	0 to (T_{sniff} - 2)
encryption mode	1	u_int8		0: no encryption 1: encryption 2: encryption 3 -255: Reserved	
error code	1	u_int8		See Part D on page 291	
escape op code	1	u_int8		Identifies which escape op code is being acknowl-edged: range 124-127	
eSCO handle	1	u_int8			
eSCO LT_ADDR	1	u_int8		Logical transport address for the eSCO logical trans-port. The range is extended to 8 bits com-pared with the normal LT_ADDR field: range 0-7.	0 - 7
eSCO packet type	1	u_int8		0x00: NULL/POLL 0x07: EV3 0x0C: EV4 0x0D: EV5 Other values are reserved	If the value is 0x00 the POLL packet shall be used by the master, the NULL packet shall be used by the slave. See Table 5.3 on page 283
extended features	8	multiple bytes		One page of extended fea-tures	
extended op code	1	u_int8		Which extended op code is being acknowledged	
features	8	multiple bytes		See Table 3.2 on page 207	

Table 5.2: Parameters in LM PDUs.

Name	Length (bytes)	Type	Unit	Detailed	Mandatory range
features page	1	u_int8		Identifies which page of extended features is being requested. 0 means standard features 1-255 other feature pages	
hold instant	4	u_int32	slots	Bits 27:1 of the master Bluetooth clock value	
hold time	2	u_int16	slots	Only even values are valid[1]	0x0014 to 0x8000; shall not exceed (supervisionTO * 0.999)
jitter	1	u_int8	µs		
key	16	multiple bytes			
key size	1	u_int8	byte		
key size mask	2	u_int16		Bit mask of supported broadcast encryption key sizes: least significant bit is support for length 1, and so on. The bit shall be one if the key size is supported.	
LT_ADDR	1	u_int4			
M_{access}	1	u_int4		number of access windows	
max slots	1	u_int8	slots		
max supported page	1	u_int8		Highest page of extended features which contains a non-zero bit for the originating device. Range 0-255	
$N_{acc\text{-}slots}$	1	u_int8	slots		
name fragment	14	multiple bytes		UTF-8 characters.	
name length	1	u_int8	bytes		
name offset	1	u_int8	bytes		
N_B	1	u_int8			
N_{BC}	1	u_int8			
N_{Bsleep}	1	u_int8			

Table 5.2: Parameters in LM PDUs.

Name	Length (bytes)	Type	Unit	Detailed	Mandatory range
negotiation state	1	u_int8		0: Initiate negotiation 1: the latest received set of negotiable parameters were possible but these parameters are preferred. 2: the latest received set of negotiable parameters would cause a reserved slot violation. 3: the latest received set of negotiable parameters would cause a latency violation. 4: the latest received set of of negotiable parameters are not supported. Other values are reserved	
N_{poll}	1	u_int8			
op code	1	u_int8			
packet length	2	uint16	bytes	Length of the eSCO payload 0 for POLL/NULL 1-30 for EV3 1-120 for EV4 1-180 for EV5 Other values are invalid	See Table 5.3 on page 283
paging scheme	1	u_int8		0: mandatory scheme 1-255: Reserved	
paging scheme settings	1	u_int8		For mandatory scheme: 0: R0 1: R1 2: R2 3-255: Reserved	
PM_ADDR	1	u_int8			
poll interval	2	u_int16	slots	Only even values are valid[1]	0x0006 to 0x1000
random number	16	multiple bytes			

Table 5.2: Parameters in LM PDUs.

Name	Length (bytes)	Type	Unit	Detailed	Mandatory range
reserved(n)	n	u_int8		Reserved for future use – must be 0 when transmitted, ignore value when received	
SCO handle	1	u_int8			
SCO packet	1	u_int8		0: HV1 1: HV2 2: HV3 3-255: Reserved	
slot offset	2	u_int16	µs	0 ≤ slot offset < 1250	
sniff attempt	2	u_int16	received slots	Number of receive slots	1 to $T_{sniff}/2$
sniff timeout	2	u_int16	received slots	Number of receive slots	0 to 0x0028
SubVersNr	2	u_int16		Defined by each company	
supervision timeout	2	u_int16	slots	0 means an infinite timeout	0 and 0x0190 to 0xFFFF
switch instant	4	u_int32	slots	Bits 27:1 of the master Bluetooth clock value	
T_{access}	1	u_int8	slots		
T_B	2	u_int16	slots		
T_{eSCO}	1	u_int8	slots	Valid range is 4 – 254 slots	See Table 5.3 on page 283
timing control flags	1	u_int8		bit0 = 0: no timing change bit0 = 1: timing change bit1 = 0: use initialization 1 bit1 = 1: use initialization 2 bit2 = 0: access window bit2 = 1: no access window bit3-7: Reserved	
T_{sco}	1	u_int8	slots	Only even values are valid[1]	2 to 6
T_{sniff}	2	u_int16	slots	Only even values are valid[1]	0x0006 to 0x0540; shall not exceed (supervisionTO * 0.999)

Table 5.2: Parameters in LM PDUs.

Name	Length (bytes)	Type	Unit	Detailed	Mandatory range
VersNr	1	u_int8		See Bluetooth Assigned Numbers, (http://www.bluetooth.org/assigned-numbers.htm)	
W_{eSCO}	1	u_int8	slots	Number of slots in the retransmission window Valid range is 0 – 254 slots	See Table 5.3 on page 283

Table 5.2: Parameters in LM PDUs.

1. If a device receives an LMP PDU with an odd value in this parameter field the PDU should be rejected with an error code of *invalid LMP parameters*.

	EV3	EV4	EV5
D_{eSCO}	0-4 (even)	0-14 (even)	0-14 (even)
T_{eSCO}	6	16 (even)	16 (even)
W_{eSCO}	0-4 (even)	0-6 (even)	0-6 (even)
eSCO packet type M->S	EV3	EV3, EV4	EV3, EV5
eSCO packet type S->M	EV3	EV3, EV4	EV3, EV5
packet length M->S	30	1-120	1-180
packet length S->M	30	1-120	1-180
air mode	At least one of A-law, mu-law, CVSD, transparent	transparent	transparent

Table 5.3: Mandatory parameter ranges for eSCO packet types

5.3 DEFAULT VALUES

Devices shall use these values before anything else has been negotiated:

Parameter	Value
AFH_mode	AFH_disabled
AFH_reporting_mode	AFH_reporting_disabled
drift	250
jitter	10
max slots	1
poll interval	40

Table 5.4: Default values.

6 LIST OF FIGURES

Figure 1.1: Link Manager Protocol signalling layer. 195
Figure 2.1: Transmission of a message from master to slave. 198
Figure 2.2: Payload body when LMP PDUs are sent. 199
Figure 2.3: Symbols used in sequence diagrams. 201
Figure 4.1: Connection establishment. 209
Figure 4.2: Slot offset for role switch. 242

Sequence 1: Connection closed by sending LMP_detach. 211
Sequence 2: A device requests a change of the other device's TX power. ..212
Sequence 3: The TX power cannot be increased. 212
Sequence 4: The TX power cannot be decreased. 212
Sequence 5: Master Enables AFH. 214
Sequence 6: Master disables AFH. 214
Sequence 7: Master Updates AFH. 215
Sequence 8: Channel classification reporting. 217
Sequence 9: Setting the link supervision timeout. 218
Sequence 10: A notifies B to enable CQDDR 219

Sequence 11: B sends A a preferred packet type 219
Sequence 12: Master notifies slave of quality of service. 220
Sequence 13: Device accepts new quality of service 221
Sequence 14: Device rejects new quality of service. 221
Sequence 15: Negotiation for page mode. 222
Sequence 16: Negotiation for page scan mode 222
Sequence 17: Device allows Remote Device to use a maximum number of slots. 223
Sequence 18: Device requests a maximum number of slots. Remote Device accepts. 223
Sequence 19: Device requests a maximum number of slots. Remote Device rejects. 223
Sequence 20: Authentication. Claimant has link key. 224

Sequence 21: Authentication fails. Claimant has no link key. 225
Sequence 22: Pairing accepted. Responder has a variable PIN. Initiator has a variable or fixed PIN. 226
Sequence 23: Responder has a fixed PIN and initiator has a variable PIN. 227
Sequence 24: Both devices have a fixed PIN. 227
Sequence 25: Responder rejects pairing. 227
Sequence 26: Creation of the link key. 228
Sequence 27: Successful change of the link key. 229
Sequence 28: Change of the link key not possible since the other device uses

a unit key. 229
Sequence 29: Change to a temporary link key. 230
Sequence 30: Link key changed to the semi-permanent link key. 231

Sequence 31: Negotiation for encryption mode. 233
Sequence 32: Encryption key size negotiation successful. 234
Sequence 33: Encryption key size negotiation failed. 234
Sequence 34: Start of encryption. 234
Sequence 35: Stop of encryption. 235
Sequence 36: Request for supported encryption key sizes. 236
Sequence 37: The requested device supports timing accuracy information. .237
Sequence 38: The requested device does not support timing accuracy information. 237
Sequence 39: Clock offset requested. 238
Sequence 40: Request for LMP version. 239
Sequence 41: Request for supported features. 240
Sequence 42: Request for extended features. 240

Sequence 43: Device’s name requested and it responses. 241
Sequence 44: Slot offset information is sent. 242
Sequence 45: Role switch (slave initiated). 243
Sequence 46: Role switch (master initiated). 244
Sequence 47: Master forces slave into hold mode. 245
Sequence 48: Slave forces master into hold mode. 246
Sequence 49: Negotiation for hold mode. 247
Sequence 50: Slave accepts to enter park state. 250
Sequence 51: Slave rejects to enter into park state 250

Sequence 52: Slave requests to enter park state and accepts master's beacon parameters. 251
Sequence 53: Master rejects slave's request to enter park state 251
Sequence 54: Slave requests to enter park state, but rejects master's beacon parameters. 251
Sequence 55: Master notifies all slaves of increase in broadcast capacity. 251
Sequence 56: Master modifies beacon parameters. 252
Sequence 57: Master unparks slaves addressed with their BD_ADDR. ...252
Sequence 58: Master unparks slaves addressed with their PM_ADDR. ...253
Sequence 59: Negotiation for sniff mode. 254
Sequence 60: Slave moved from sniff mode to active mode. 255
Sequence 61: Master requests an SCO link. 257
Sequence 62: Master rejects slave’s request for an SCO link. 257
Sequence 63: Master accepts slave’s request for an SCO link. 257
Sequence 64: SCO link removed. 258

Sequence 65: Master requests an eSCO link. 260
Sequence 66: Slave requests an eSCO link. 260

Sequence 67: Master rejects slave's request for an eSCO link. 261
Sequence 68: eSCO link removed 261
Sequence 69: Activation of test mode successful. 264
Sequence 70: Activation of test mode fails. Slave is not allowed to enter test mode. 264
Sequence 71: Control of test mode successful. 265
Sequence 72: Control of test mode rejected since slave is not in test mode. .265

7 LIST OF TABLES

Table 2.1: General response messages. 202
Table 3.1: Feature definitions. 203
Table 3.2: Feature mask definition....207
Table 4.1: PDUs used for connection establishment. 210
Table 4.2: PDU used for detach....210
Table 4.3: PDUs used for power control. 211
Table 4.4: PDUs used for AFH....213
Table 4.5: PDUs used for Channel Classification Reporting....216
Table 4.6: PDU used to set the supervision timeout. 218
Table 4.7: PDUs used for quality driven change of the data rate....219
Table 4.8: PDUs used for quality of service. 220
Table 4.9: PDUs used to request paging scheme....222
Table 4.10: PDUs used to control the use of multi-slot packets....223
Table 4.11: PDUs used for authentication. 224
Table 4.12: PDUs used for pairing 226
Table 4.13: PDUs used for change of link key. 229
Table 4.14: PDUs used to change the current link key. 230
Table 4.15: PDUs used for handling encryption....232
Table 4.16: PDUs used for encryption key size request 236
Table 4.17: PDUs used for requesting timing accuracy information. 237
Table 4.18: PDUs used for clock offset request....238
Table 4.19: PDUs used for LMP version request....239
Table 4.20: PDUs used for features request....240
Table 4.21: PDUs used for name request....241
Table 4.22: PDU used for slot offset information. 242
Table 4.23: PDUs used for role switch....243
Table 4.24: PDUs used for hold mode. 245
Table 4.25: PDUs used for park state. 248
Table 4.26: PDUs used for sniff mode. 253
Table 4.27: PDUs used for managing the SCO links. 256
Table 4.28: PDUs used for managing the eSCO links 259
Table 4.29: LMP messages used for Test Mode....266
Table 4.30: Parameters used in LMP_Test_Control PDU....266
Table 4.31: Restrictions for Parameters used in LMP_Test_Control PDU..268
Table 5.1: Coding of the different LM PDUs. 269
Table 5.2: Parameters in LM PDUs. 277
Table 5.3: Mandatory parameter ranges for eSCO packet types....283
Table 5.4: Default values. 284

Core System Package [Controller volume]
Part D

ERROR CODES

CONTENTS

1 Overview of Error Codes 295
1.1 Usage Descriptions 295
1.2 HCI Command Errors....295
1.3 List of Error Codes 296
2 Error Code Descriptions....299
2.1 Unknown HCI Command (0X01)....299
2.2 Unknown Connection Identifier (0X02) 299
2.3 Hardware Failure (0X03)....299
2.4 Page Timeout (0X04) 299
2.5 Authentication Failure (0X05)....299
2.6 PIN Missing (0X06) 299
2.7 Memory Capacity Exceeded (0X07) 299
2.8 Connection Timeout (0X08) 300
2.9 Connection Limit Exceeded (0X09)....300
2.10 Synchronous Connection Limit to a Device Exceeded (0X0A) 300
2.11 ACL Connection Already Exists (0X0B) 300
2.12 Command Disallowed (0X0C)....300
2.13 Connection Rejected due to Limited Resources (0X0D)....300
2.14 Connection Rejected due to Security Reasons (0X0E) 300
2.15 Connection Rejected due to Unacceptable BD_ADDR (0X0F)301
2.16 Connection Accept Timeout Exceeded (0X10) 301
2.17 Unsupported Feature or Parameter Value (0X11)....301
2.18 Invalid HCI Command Parameters (0X12)....301
2.19 Remote User Terminated Connection (0X13) 301
2.20 Remote Device Terminated Connection due to Low Resources (0X14) 302
2.21 Remote Device Terminated Connection due to Power Off (0X15) 302
2.22 Connection Terminated by Local Host (0X16)....302
2.23 Repeated Attempts (0X17)....302
2.24 Pairing not Allowed (0X18)....302
2.25 Unknown LMP PDU (0X19) 302
2.26 Unsupported Remote Feature (0X1A) 302
2.27 SCO Offset Rejected (0X1B) 302
2.28 SCO Interval Rejected (0X1C)....303
2.29 SCO Air Mode Rejected (0X1D) 303
2.30 INvalid LMP Parameters (0X1E)....303
2.31 Unspecified Error (0X1F) 303
2.32 Unsupported LMP Parameter Value (0X20)....303
2.33 Role Change Not Allowed (0X21) 303

2.34 LMP Response Timeout (0X22) 303
2.35 LMP Error Transaction Collision (0X23) 304
2.36 LMP PDU Not Allowed (0X24) 304
2.37 Encryption Mode Not Acceptable (0X25) 304
2.38 Link Key Can Not be Changed (0X26) 304
2.39 Requested Qos is Not Supported (0X27) 304
2.40 Instant Passed (0X28) 304
2.41 Pairing with Unit Key Not Supported (0X29) 304
2.42 DIFFERENT TRANSACTION COLLISION (0X2A) 304
2.43 QoS Unacceptable Parameter (0X2C) 304
2.44 QoS Rejected (0X2D) 305
2.45 Channel Classification Not Supported (0X2E) 305
2.46 Insufficient Security (0X2F) 305
2.47 Parameter out of Mandatory Range (0X30) 305
2.48 Role Switch Pending (0X32) 305
2.49 Reserved Slot Violation (0X34) 305
2.50 Role Switch Failed (0X35) 305

1 OVERVIEW OF ERROR CODES

This document lists the various possible error codes. When a command fails, or an LMP message needs to indicate a failure, error codes are used to indicate the reason for the error. Error codes have a size of one octet.

1.1 USAGE DESCRIPTIONS

The purpose of this section is to give descriptions of how the error codes should be used. It is beyond the scope of this document to give detailed descriptions of all situations where error codes can be used, especially as this may be implementation dependent.

1.2 HCI COMMAND ERRORS

If an HCI Command that should generate an HCI_Command_Complete event generates an error then this error shall be reported in the HCI_Command_Complete event.

If an HCI Command that sent an HCI_Command_Status with the error code ‘Success’ to the host before processing may find an error during execution then the error may be reported in the normal completion command for the original command or in an HCI_Command_Status event.

Some HCI Commands may generate errors that need to be reported to be host, but there is insufficient information to determine how the command would normally be processed. In this case, two events can be used to indicate this to the host, the HCI_Command_Complete event and HCI_Command_Status events. Which of the two events is used is implementation-dependent.

1.3 LIST OF ERROR CODES

The error code of 0x00 means Success. The possible range of failure error codes is 0x01-0xFF. Section 2 provides an error code usage description for each failure error code.

Error Code	Name
0x00	Success
0x01	Unknown HCI Command
0x02	Unknown Connection Identifier
0x03	Hardware Failure
0x04	Page Timeout
0x05	Authentication Failure
0x06	PIN Missing
0x07	Memory Capacity Exceeded
0x08	Connection Timeout
0x09	Connection Limit Exceeded
0x0A	Synchronous Connection Limit To A Device Exceeded
0x0B	ACL Connection Already Exists
0x0C	Command Disallowed
0x0D	Connection Rejected due to Limited Resources
0x0E	Connection Rejected Due To Security Reasons
0x0F	Connection Rejected due to Unacceptable BD_ADDR
0x10	Connection Accept Timeout Exceeded
0x11	Unsupported Feature or Parameter Value
0x12	Invalid HCI Command Parameters
0x13	Remote User Terminated Connection
0x14	Remote Device Terminated Connection due to Low Resources
0x15	Remote Device Terminated Connection due to Power Off
0x16	Connection Terminated By Local Host
0x17	Repeated Attempts
0x18	Pairing Not Allowed
0x19	Unknown LMP PDU
0x1A	Unsupported Remote Feature
0x1B	SCO Offset Rejected

Table 1.1: List of Possible Error Codes

Error Code	Name
0x1C	SCO Interval Rejected
0x1D	SCO Air Mode Rejected
0x1E	Invalid LMP Parameters
0x1F	Unspecified Error
0x20	Unsupported LMP Parameter Value
0x21	Role Change Not Allowed
0x22	LMP Response Timeout
0x23	LMP Error Transaction Collision
0x24	LMP PDU Not Allowed
0x25	Encryption Mode Not Acceptable
0x26	Link Key Can Not be Changed
0x27	Requested QoS Not Supported
0x28	Instant Passed
0x29	Pairing With Unit Key Not Supported
0x2A	Different Transaction Collision
0x2B	Reserved
0x2C	QoS Unacceptable Parameter
0x2D	QoS Rejected
0x2E	Channel Classification Not Supported
0x2F	Insufficient Security
0x30	Parameter Out Of Mandatory Range
0x31	Reserved
0x32	Role Switch Pending
0x33	Reserved
0x34	Reserved Slot Violation
0x35	Role Switch Failed

Table 1.1: List of Possible Error Codes

2 ERROR CODE DESCRIPTIONS

2.1 UNKNOWN HCI COMMAND (0X01)

The Unknown HCI Command error code indicates that the controller does not understand the HCI Command Packet OpCode that the host sent. The OpCode given might not correspond to any of the OpCodes specified in this document, or any vendor-specific OpCodes, or the command may not have been implemented.

2.2 UNKNOWN CONNECTION IDENTIFIER (0X02)

The Unknown Connection Identifier error code indicates that a command was sent from the host that should identify a connection, but that connection does not exist.

2.3 HARDWARE FAILURE (0X03)

The Hardware Failure error code indicates to the host that something in the controller has failed in a manner that cannot be described with any other error code. The meaning implied with this error code is implementation dependent.

2.4 PAGE TIMEOUT (0X04)

The Page Timeout error code indicates that a page timed out because of the Page Timeout configuration parameter. This error code may occur only with the HCI_Remote_Name_Request and HCI_Create_Connection commands.

2.5 AUTHENTICATION FAILURE (0X05)

The Authentication Failure error code indicates that pairing or authentication failed due to incorrect results in the pairing or authentication procedure. This could be due to an incorrect PIN or Link Key.

2.6 PIN MISSING (0X06)

The PIN Missing error code is used when pairing failed because of a missing PIN.

2.7 MEMORY CAPACITY EXCEEDED (0X07)

The Memory Capacity Exceeded error code indicates to the host that the controller has run out of memory to store new parameters.

2.8 CONNECTION TIMEOUT (0X08)

The Connection Timeout error code indicates that the link supervision timeout has expired for a given connection.

2.9 CONNECTION LIMIT EXCEEDED (0X09)

The Connection Limit Exceeded error code indicates that an attempt to create another connection failed because the controller is already at its limit of the number of connections it can support. The number of connections a device can support is implementation dependent.

2.10 SYNCHRONOUS CONNECTION LIMIT TO A DEVICE EXCEEDED (0X0A)

The Synchronous Connection Limit to a Device Exceeded error code indicates that the controller has reached the limit to the number of synchronous connections that can be achieved to a device. The number of synchronous connections a device can support is implementation dependent.

2.11 ACL CONNECTION ALREADY EXISTS (0X0B)

The ACL Connection Already Exists error code indicates that an attempt to create a new ACL Connection to a device when there is already a connection to this device.

2.12 COMMAND DISALLOWED (0X0C)

The Command Disallowed error code indicates that the command requested cannot be executed because the controller is in a state where it cannot process this command at this time. This error shall not be used for command OpCodes where the error code Unknown HCI Command is valid.

2.13 CONNECTION REJECTED DUE TO LIMITED RESOURCES (0X0D)

The Connection Rejected Due To Limited Resources error code indicates that an incoming connection was rejected due to limited resources.

2.14 CONNECTION REJECTED DUE TO SECURITY REASONS (0X0E)

The Connection Rejected Due To Security Reasons error code indicates that a connection was rejected due to security requirements not being fulfilled, like authentication or pairing.

2.15 CONNECTION REJECTED DUE TO UNACCEPTABLE BD_ADDR (0X0F)

The Connection Rejected due to Unacceptable BD_ADDR error code indicates that a connection was rejected because this device does not accept the BD_ADDR. This may be because the device will only accept connections from specific BD_ADDRs.

2.16 CONNECTION ACCEPT TIMEOUT EXCEEDED (0X10)

The Connection Accept Timeout Exceeded error code indicates that the Connection Accept Timeout has been exceeded for this connection attempt.

2.17 UNSUPPORTED FEATURE OR PARAMETER VALUE (0X11)

The Unsupported Feature Or Parameter Value error code indicates that a feature or parameter value in an LMP message or HCI Command is not supported.

2.18 INVALID HCI COMMAND PARAMETERS (0X12)

The Invalid HCI Command Parameters error code indicates that at least one of the HCI command parameters is invalid.

This shall be used when :

- the parameter total length is invalid.
- a command parameter is an invalid type.
- a connection identifier does not match the corresponding event.
- a parameter value must be even.
- a parameter is outside of the specified range.
- two or more parameter values have inconsistent values.

Note: An invalid type can be, for example, when an SCO connection handle is used where an ACL connection handle is required.

2.19 REMOTE USER TERMINATED CONNECTION (0X13)

The Remote User Terminated Connection error code indicates that the user on the remote device terminated the connection.

2.20 REMOTE DEVICE TERMINATED CONNECTION DUE TO LOW RESOURCES (0X14)

The Remote Device Terminated Connection due to Low Resources error code indicates that the remote device terminated the connection because of low resources.

2.21 REMOTE DEVICE TERMINATED CONNECTION DUE TO POWER OFF (0X15)

The Remote Device Terminated Connection due to Power Off error code indicates that the remote device terminated the connection because the device is about to power off.

2.22 CONNECTION TERMINATED BY LOCAL HOST (0X16)

The Connection Terminated By Local Host error code indicates that the local device terminated the connection.

2.23 REPEATED ATTEMPTS (0X17)

The Repeated Attempts error code indicates that the controller is disallowing an authentication or pairing procedure because too little time has elapsed since the last authentication or pairing attempt failed.

2.24 PAIRING NOT ALLOWED (0X18)

The Pairing Not Allowed error code indicates that the device does not allow pairing. For example, when a device only allows pairing during a certain time window after some user input allows pairing.

2.25 UNKNOWN LMP PDU (0X19)

The Unknown LMP PDU error code indicates that the controller has received an unknown LMP opcode.

2.26 UNSUPPORTED REMOTE FEATURE (0X1A)

The Unsupported Remote Feature error code indicates that the remote device does not support the feature associated with the issued command or LMP PDU.

2.27 SCO OFFSET REJECTED (0X1B)

The SCO Offset Rejected error code indicates that the offset requested in the LMP_SCO_link_req message has been rejected.

2.28 SCO INTERVAL REJECTED (0X1C)

The SCO Interval Rejected error code indicates that the interval requested in the LMP_SCO_link_req message has been rejected.

2.29 SCO AIR MODE REJECTED (0X1D)

The SCO Air Mode Rejected error code indicates that the air mode requested in the LMP_SCO_link_req message has been rejected.

2.30 INVALID LMP PARAMETERS (0X1E)

The Invalid LMP Parameters error code indicates that some LMP message parameters were invalid. This shall be used when :

- the PDU length is invalid.
- a parameter value must be even.
- a parameter is outside of the specified range.
- two or more parameters have inconsistent values.

2.31 UNSPECIFIED ERROR (0X1F)

The Unspecified Error error code indicates that no other error code specified is appropriate to use.

2.32 UNSUPPORTED LMP PARAMETER VALUE (0X20)

The Unsupported LMP Parameter Value error code indicates that an LMP message contains at least one parameter value that is not supported by the controller at this time. This is normally used after a long negotiation procedure, for example during an LMP_hold_req, LMP_sniff_req and LMP_encryption_key_size_req message exchanges.

2.33 ROLE CHANGE NOT ALLOWED (0X21)

The Role Change Not Allowed error code indicates that a controller will not allow a role change at this time.

2.34 LMP RESPONSE TIMEOUT (0X22)

The LMP Response Timeout error code indicates that an LMP transaction failed to respond within the LMP response timeout.

2.35 LMP ERROR TRANSACTION COLLISION (0X23)

The LMP Error Transaction Collision error code indicates that an LMP transaction has collided with the same transaction that is already in progress.

2.36 LMP PDU NOT ALLOWED (0X24)

The LMP PDU Not Allowed error code indicates that a controller sent an LMP message with an opcode that was not allowed.

2.37 ENCRYPTION MODE NOT ACCEPTABLE (0X25)

The Encryption Mode Not Acceptable error code indicates that the requested encryption mode is not acceptable at this time.

2.38 LINK KEY CAN NOT BE CHANGED (0X26)

The Link Key Can Not be Changed error code indicates that a link key can not be changed because a fixed unit key is being used.

2.39 REQUESTED QoS NOT SUPPORTED (0X27)

The Requested QoS Not Supported error code indicates that the requested Quality of Service is not supported.

2.40 INSTANT PASSED (0X28)

The Instant Passed error code indicates that an LMP PDU that includes an instant can not be performed because the instant when this would have occurred has passed.

2.41 PAIRING WITH UNIT KEY NOT SUPPORTED (0X29)

The Pairing With Unit Key Not Supported error code indicates that it was not possible to pair as a unit key was requested and it is not supported.

2.42 DIFFERENT TRANSACTION COLLISION (0X2A)

The Different Transaction Collision error code indicates that an LMP transaction was started that collides with an ongoing transaction.

2.43 QoS UNACCEPTABLE PARAMETER (0X2C)

The QoS Unacceptable Parameter error code indicates that the specified quality of service parameters could not be accepted at this time, but other parameters may be acceptable.

2.44 QoS REJECTED (0X2D)

The QoS Rejected error code indicates that the specified quality of service parameters can not be accepted and QoS negotiation should be terminated.

2.45 CHANNEL CLASSIFICATION NOT SUPPORTED (0X2E)

The Channel Classification Not Supported error code indicates that the controller can not perform channel classification because it is not supported.

2.46 INSUFFICIENT SECURITY (0X2F)

The Insufficient Security error code indicates that the HCI command or LMP message sent is only possible on an encrypted link.

2.47 PARAMETER OUT OF MANDATORY RANGE (0X30)

The Parameter Out Of Mandatory Range error code indicates that a parameter value requested is outside the mandatory range of parameters for the given HCI command or LMP message.

2.48 ROLE SWITCH PENDING (0X32)

The Role Switch Pending error code indicates that a Role Switch is pending. This can be used when an HCI command or LMP message can not be accepted because of a pending role switch. This can also be used to notify a peer device about a pending role switch.

2.49 RESERVED SLOT VIOLATION (0X34)

The Reserved Slot Violation error code indicates that the current Synchronous negotiation was terminated with the negotiation state set to Reserved Slot Violation.

2.50 ROLE SWITCH FAILED (0X35)

The Role Switch Failed error code indicates that a role switch was attempted but it failed and the original piconet structure is restored. The switch may have failed because the TDD switch or piconet switch failed.

Core System Package [Controller volume]
Part E

HOST CONTROLLER INTERFACE FUNCTIONAL SPECIFICATION

This document describes the functional specification for the Host Controller Interface (HCI).
The HCI provides a command interface to the baseband controller and link manager, and access to configuration parameters. This interface provides a uniform method of accessing the Bluetooth baseband capabilities.

CONTENTS

1 Introduction 317
1.1 Lower Layers of the Bluetooth Software Stack 317
2 Overview of Host Controller Transport Layer....319
3 Overview of Commands and Events 321
3.1 Generic Events....322
3.2 Device Setup....322
3.3 Controller Flow Control 323
3.4 Controller Information....323
3.5 Controller Configuration 324
3.6 Device Discovery 325
3.7 Connection Setup 327
3.8 Remote Information....329
3.9 Synchronous Connections 330
3.10 Connection State....331
3.11 Piconet Structure....332
3.12 Quality of Service....333
3.13 Physical Links 334
3.14 Host Flow Control....335
3.15 Link Information 336
3.16 Authentication and Encryption 337
3.17 Testing....339
3.18 Alphabetical List of Commands and Events 340
4 HCI Flow Control 345
4.1 Host to Controller Data Flow Control 345
4.2 Controller to Host Data Flow Control 346
4.3 Disconnection Behaviour 347
4.4 Command Flow Control 347
4.5 Command Error Handling 348
5 HCI Data Formats 349
5.1 Introduction 349
5.2 Data and Parameter Formats....349
5.3 Connection Handles....350
5.4 Exchange of HCI-Specific Information 351
5.4.1 HCI Command Packet....351
5.4.2 HCI ACL Data Packets....353
5.4.3 HCI Synchronous Data Packets....355
5.4.4 HCI Event Packet....356

6 HCI Configuration Parameters 357
6.1 Scan Enable 357
6.2 Inquiry Scan Interval 357
6.3 Inquiry Scan Window 358
6.4 Inquiry Scan Type 358
6.5 Inquiry Mode 358
6.6 Page Timeout 359
6.7 Connection Accept Timeout 359
6.8 Page Scan Interval 360
6.9 Page Scan Window 360
6.10 Page Scan Period Mode 360
6.11 Page Scan Type 361
6.12 Voice Setting 361
6.13 PIN Type 362
6.14 Link Key 362
6.15 Authentication Enable 362
6.16 Encryption Mode 363
6.17 Failed Contact Counter 364
6.18 Hold Mode Activity 364
6.19 Link Policy Settings 365
6.20 Flush Timeout 366
6.21 Num Broadcast Retransmissions 366
6.22 Link Supervision Timeout 367
6.23 Synchronous Flow Control Enable 367
6.24 Local Name 368
6.25 Class Of Device 368
6.26 Supported Commands 369
7 HCI Commands and Events 373
7.1 Link Control Commands 373
7.1.1 Inquiry Command 373
7.1.2 Inquiry Cancel Command 375
7.1.3 Periodic Inquiry Mode Command 376
7.1.4 Exit Periodic Inquiry Mode Command 379
7.1.5 Create Connection Command 380
7.1.6 Disconnect Command 383
7.1.7 Create Connection Cancel Command 384
7.1.8 Accept Connection Request Command 386
7.1.9 Reject Connection Request Command 388
7.1.10 Link Key Request Reply Command 389
7.1.11 Link Key Request Negative Reply Command 391
7.1.12 PIN Code Request Reply Command 392

7.1.13 PIN Code Request Negative Reply Command 394
7.1.14 Change Connection Packet Type Command 395
7.1.15 Authentication Requested Command.....398
7.1.16 Set Connection Encryption Command 399
7.1.17 Change Connection Link Key Command 400
7.1.18 Master Link Key Command 401
7.1.19 Remote Name Request Command 402
7.1.20 Remote Name Request Cancel Command 404
7.1.21 Read Remote Supported Features Command.....405
7.1.22 Read Remote Extended Features Command 406
7.1.23 Read Remote Version Information Command.....407
7.1.24 Read Clock Offset Command.....408
7.1.25 Read LMP Handle Command 409
7.1.26 Setup Synchronous Connection Command 411
7.1.27 Accept Synchronous Connection Request Command 415
7.1.28 Reject Synchronous Connection Request Command .419
7.2 Link Policy Commands.....420
7.2.1 Hold Mode Command 420
7.2.2 Sniff Mode Command.....422
7.2.3 Exit Sniff Mode Command.....425
7.2.4 Park State Command 426
7.2.5 Exit Park State Command 428
7.2.6 QoS Setup Command 429
7.2.7 Role Discovery Command.....431
7.2.8 Switch Role Command.....432
7.2.9 Read Link Policy Settings Command 433
7.2.10 Write Link Policy Settings Command 434
7.2.11 Read Default Link Policy Settings Command 436
7.2.12 Write Default Link Policy Settings Command 437
7.2.13 Flow Specification Command 438

7.3 Controller & Baseband Commands 440
7.3.1 Set Event Mask Command 440
7.3.2 Reset Command 442
7.3.3 Set Event Filter Command 443
7.3.4 Flush Command 448
7.3.5 Read PIN Type Command 450
7.3.6 Write PIN Type Command 451
7.3.7 Create New Unit Key Command 452
7.3.8 Read Stored Link Key Command 453
7.3.9 Write Stored Link Key Command 454
7.3.10 Delete Stored Link Key Command 456
7.3.11 Write Local Name Command 457
7.3.12 Read Local Name Command 458
7.3.13 Read Connection Accept Timeout Command 459
7.3.14 Write Connection Accept Timeout Command 460
7.3.15 Read Page Timeout Command 461
7.3.16 Write Page Timeout Command 462
7.3.17 Read Scan Enable Command 463
7.3.18 Write Scan Enable Command 464
7.3.19 Read Page Scan Activity Command 465
7.3.20 Write Page Scan Activity Command 467
7.3.21 Read Inquiry Scan Activity Command 468
7.3.22 Write Inquiry Scan Activity Command 469
7.3.23 Read Authentication Enable Command 470
7.3.24 Write Authentication Enable Command 471
7.3.25 Read Encryption Mode Command 472
7.3.26 Write Encryption Mode Command 473
7.3.27 Read Class of Device Command 474
7.3.28 Write Class of Device Command 475
7.3.29 Read Voice Setting Command 476
7.3.30 Write Voice Setting Command 477
7.3.31 Read Automatic Flush Timeout Command 478
7.3.32 Write Automatic Flush Timeout Command 479
7.3.33 Read Num Broadcast Retransmissions Command 480
7.3.34 Write Num Broadcast Retransmissions Command 481
7.3.35 Read Hold Mode Activity Command 482
7.3.36 Write Hold Mode Activity Command 483
7.3.37 Read Transmit Power Level Command 484

7.3.38 Read Synchronous Flow Control Enable Command...486
7.3.39 Write Synchronous Flow Control Enable Command...487
7.3.40 Set Controller To Host Flow Control Command 488
7.3.41 Host Buffer Size Command.....489
7.3.42 Host Number Of Completed Packets Command.....491
7.3.43 Read Link Supervision Timeout Command.....493
7.3.44 Write Link Supervision Timeout Command 494
7.3.45 Read Number Of Supported IAC Command.....496
7.3.46 Read Current IAC LAP Command 497
7.3.47 Write Current IAC LAP Command.....498
7.3.48 Read Page Scan Period Mode Command 500
7.3.49 Write Page Scan Period Mode Command 501
7.3.50 Set AFH Host Channel Classification Command 502
7.3.51 Read Inquiry Scan Type Command 503
7.3.52 Write Inquiry Scan Type Command 504
7.3.53 Read Inquiry Mode Command 505
7.3.54 Write Inquiry Mode Command 506
7.3.55 Read Page Scan Type Command 507
7.3.56 Write Page Scan Type Command 508
7.3.57 Read AFH Channel Assessment Mode Command 509
7.3.58 Write AFH Channel Assessment Mode Command 510
7.4 Informational Parameters.....512
7.4.1 Read Local Version Information Command.....512
7.4.2 Read Local Supported Commands Command.....514
7.4.3 Read Local Supported Features Command.....515
7.4.4 Read Local Extended Features Command 516
7.4.5 Read Buffer Size Command.....518
7.4.6 Read BD_ADDR Command.....520
7.5 Status Parameters.....521
7.5.1 Read Failed Contact Counter Command 521
7.5.2 Reset Failed Contact Counter Command 523
7.5.3 Read Link Quality Command 524
7.5.4 Read RSSI Command.....525
7.5.5 Read AFH Channel Map Command 527
7.5.6 Read Clock Command 529
7.6 Testing Commands 531
7.6.1 Read Loopback Mode Command 531
7.6.2 Write Loopback Mode Command.....532
7.6.3 Enable Device Under Test Mode Command 535

7.7 Events 537
7.7.1 Inquiry Complete Event 537
7.7.2 Inquiry Result Event 538
7.7.3 Connection Complete Event 540
7.7.4 Connection Request Event 541
7.7.5 Disconnection Complete Event 543
7.7.6 Authentication Complete Event 544
7.7.7 Remote Name Request Complete Event 545
7.7.8 Encryption Change Event 546
7.7.9 Change Connection Link Key Complete Event 547
7.7.10 Master Link Key Complete Event 548
7.7.11 Read Remote Supported Features Complete Event 549
7.7.12 Read Remote Version Information Complete Event 550
7.7.13 QoS Setup Complete Event 551
7.7.14 Command Complete Event 553
7.7.15 Command Status Event 554
7.7.16 Hardware Error Event 555
7.7.17 Flush Occurred Event 555
7.7.18 Role Change Event 556
7.7.19 Number Of Completed Packets Event 557
7.7.20 Mode Change Event 558
7.7.21 Return Link Keys Event 560
7.7.22 PIN Code Request Event 561
7.7.23 Link Key Request Event 562
7.7.24 Link Key Notification Event 563
7.7.25 Loopback Command Event 564
7.7.26 Data Buffer Overflow Event 564
7.7.27 Max Slots Change Event 565
7.7.28 Read Clock Offset Complete Event 566
7.7.29 Connection Packet Type Changed Event 567
7.7.30 QoS Violation Event 569
7.7.31 Page Scan Repetition Mode Change Event 570
7.7.32 Flow Specification Complete Event 571
7.7.33 Inquiry Result with RSSI Event 573
7.7.34 Read Remote Extended Features Complete Event 575
7.7.35 Synchronous Connection Complete Event 576
7.7.36 Synchronous Connection Changed event 578

8 List of Figures.....581

9 List of Tables 583

Appendix A:
Deprecated Commands, Events and Configuration Parameters 585

Contents: 585

Page Scan Mode 586

Read Page Scan Mode Command 587

Write Page Scan Mode Command 588

Read Country Code Command 589

Add SCO Connection Command 590

Page Scan Mode Change Event 592

1 INTRODUCTION

This document describes the functional specifications for the Host Controller Interface (HCI). The HCI provides a uniform interface method of accessing the Bluetooth controller capabilities. The next two sections provide a brief overview of the lower layers of the Bluetooth software stack and of the Bluetooth hardware. Section 2, provides an overview of the Lower HCI Device Driver Interface on the host device. Section 4, describes the flow control used between the Host and the Controller. Section 7, describes each of the HCI Commands in details, identifies parameters for each of the commands, and lists events associated with each command.

1.1 LOWER LAYERS OF THE BLUETOOTH SOFTWARE STACK

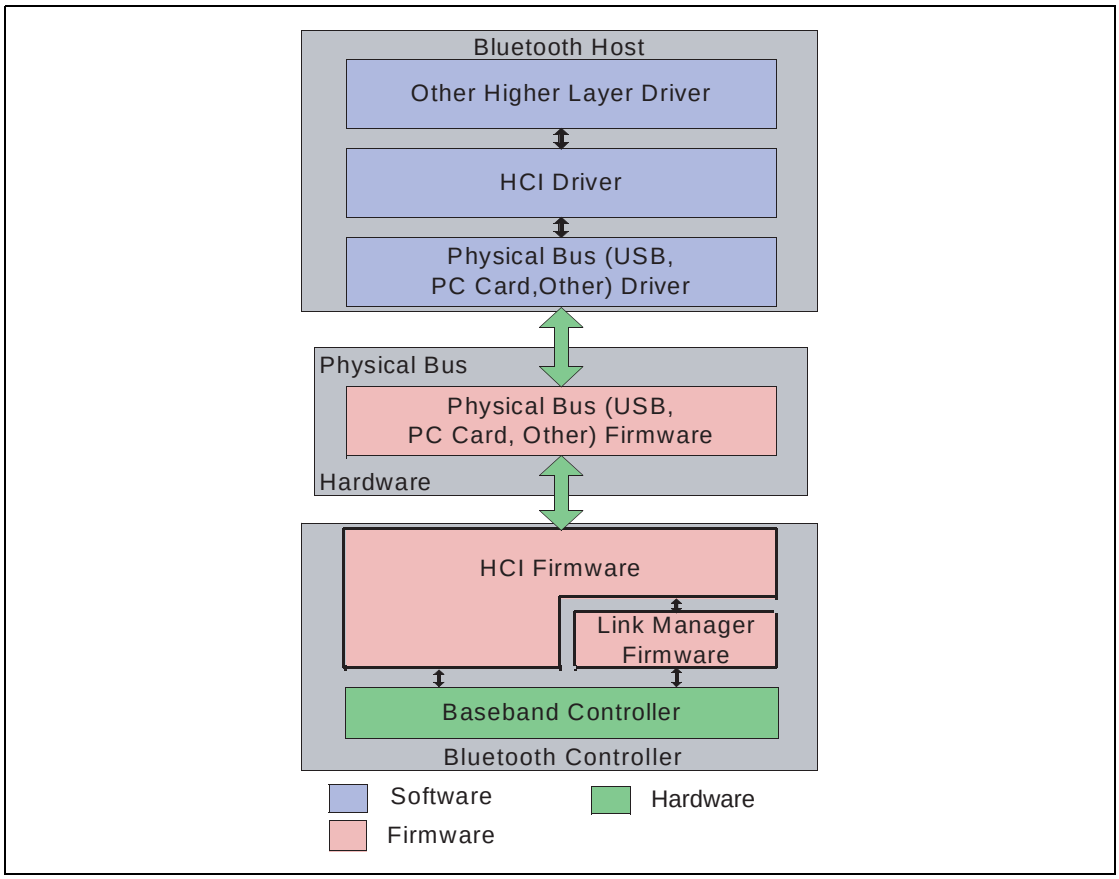

Figure 1.1: Overview of the Lower Software Layers

Figure 1.1, provides an overview of the lower software layers. The HCI firmware implements the HCI Commands for the Bluetooth hardware by accessing baseband commands link manager commands, hardware status registers, control registers, and event registers.

Several layers may exist between the HCI driver on the host system and the HCI firmware in the Bluetooth hardware. These intermediate layers, the Host

Controller Transport Layer, provide the ability to transfer data without intimate knowledge of the data.

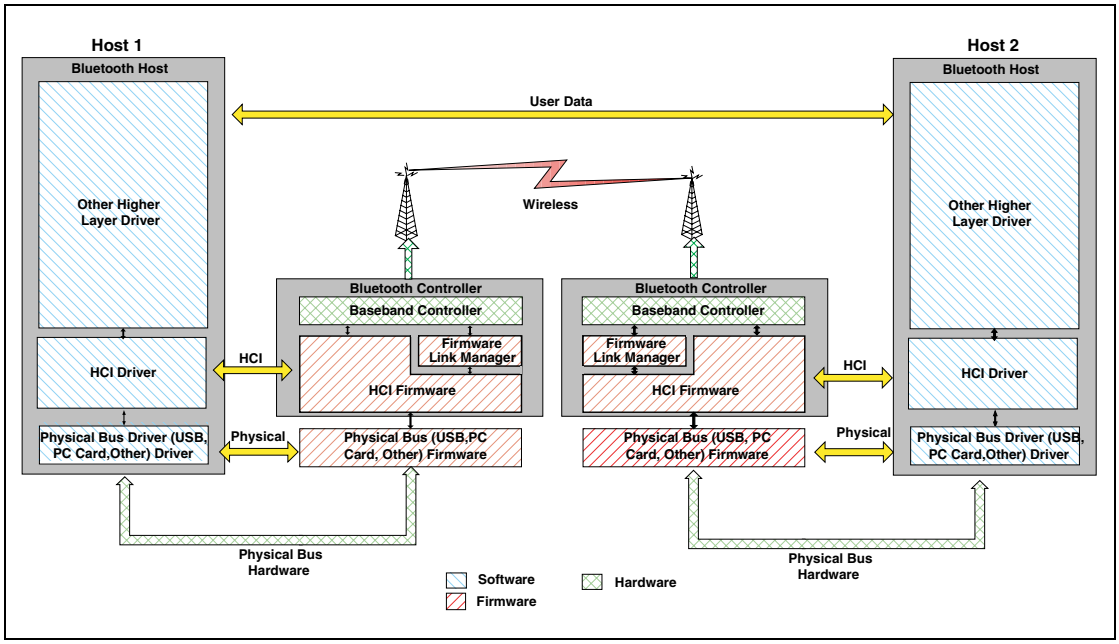

Figure 1.2: End to End Overview of Lower Software Layers to Transfer Data

Figure 1.2, illustrates the path of a data transfer from one device to another. The HCI driver on the Host exchanges data and commands with the HCI firmware on the Bluetooth hardware. The Host Control Transport Layer (i.e. physical bus) driver provides both HCI layers with the ability to exchange information with each other.

The Host will receive asynchronous notifications of HCI events independent of which Host Controller Transport Layer is used. HCI events are used for notifying the Host when something occurs. When the Host discovers that an event has occurred it will then parse the received event packet to determine which event occurred.

2 OVERVIEW OF HOST CONTROLLER TRANSPORT LAYER

The host driver stack has a transport layer between the Host Controller driver and the Host.

The main goal of this transport layer is transparency. The Host Controller driver (which interaces to the Controller) should be independent of the underlying transport technology. Nor should the transport require any visibility into the data that the Host Controller driver passes to the Controller. This allows the interface (HCI) or the Controller to be upgraded without affecting the transport layer.

The specified Host Controller Transport Layers are described in a separate volume. (See specification volume 4)

3 OVERVIEW OF COMMANDS AND EVENTS

The commands and events are sent between the Host and the Controller. These are grouped into logical groups by function.

Generic Events	The generic events can occur due to multiple commands, or events that can occur at any time.
Device Setup	The device setup commands are used to place the Controller into a known state.
Controller Flow Control	The controller flow control commands and events are used to control data flow from the Host to the controller.
Controller Information	The controller information commands allow the Host to discover local information about the device.
Controller Configuration	The controller configuration commands and events allow the global configuration parameters to be configured.
Device Discovery	The device discovery commands and events allow a device to discover other devices in the surrounding area.
Connection Setup	The connection setup commands and events allow a device to make a connection to another device.
Remote Information	The remote information commands and events allow information about a remote device's configuration to be discovered.
Synchronous Connections	The synchronous connection commands and events allow synchronous connections to be created
Connection State	The connection state commands and events allow the configuration of a link, especially for low power operation.
Piconet Structure	The piconet structure commands and events allow the discovery and reconfiguration of piconet.
Quality of Service	The quality of service commands and events allow quality of service parameters to be specified.
Physical Links	The physical link commands and events allow the configuration of a physical link.
Host Flow Control	The Host flow control commands and events allow flow control to be used towards the Host.
Link Information	The link information commands and events allow information about a link to be read.
Authentication and Encryption	The authentication and encryption commands and events allow authentication of a remote device and then encryption of the link.
Testing	The testing commands and events allow a device to be placed into test mode.

Table 3.1: Overview of commands and events

The version information in this section denotes the version number of the specification that this command or event was first specified

3.1 GENERIC EVENTS

The generic events occur due to multiple commands, or events that can occur at any time.

Name	Vers.	Summary description
Command Complete Event	1.1	The Command Complete event is used by the Controller to pass the return status of a command and the other event parameters for each HCI Command.
Command Status Event	1.1	The Command Status event is used to indicate that the command described by the Command_Opcode parameter has been received and the Controller is currently performing the task for this command.
Hardware Error Event	1.1	The Hardware Error event is used to indicate some type of hardware failure for the Controller.

Table 3.2: Generic events

3.2 DEVICE SETUP

The device setup group of commands are used to place the Controller into a known state.

Name	Vers.	Summary description
Reset Command	1.1	The Reset command will reset the Controller, Link Manager, and the Bluetooth radio.

Device setup

3.3 CONTROLLER FLOW CONTROL

The controller flow control group of commands and events are used to control data flow from the Host to the Controller.

Name	Vers.	Summary description
Read Buffer Size Command	1.1	The Read_Buffer_Size command returns the size of the HCI buffers. These buffers are used by the Controller to buffer data that is to be transmitted.
Number Of Completed Packets Event	1.1	The Number Of Completed Packets event is used by the Controller to indicate to the Host how many HCI Data Packets have been completed for each Connection Handle since the previous Number Of Completed Packets event was sent.

Table 3.3: Controller flow control

3.4 CONTROLLER INFORMATION

The controller information group of commands allows the Host to discover local information about the device.

Name	Vers.	Summary description
Read Local Version Information Command	1.1	The Read Local Version Information command will read the version information for the local Bluetooth device.
Read Local Supported Commands Command	1.2	The Read Local Supported Commands command requests a list of the supported HCI commands for the local device.
Read Local Supported Features Command	1.1	The Read Local Supported Features command requests a list of the supported features for the local device.
Read Local Extended Features Command	1.2	The Read Local Extended Features command requests a list of the supported extended features for the local device
Read BD_ADDR Command	1.1	The Read BD_ADDR command will read the value for the BD_ADDR parameter.

Table 3.4: Controller information

3.5 CONTROLLER CONFIGURATION

The controller configuration group of commands and events allows the global configuration parameters to be configured.

Name	Vers.	Summary description
Read Local Name Command	1.1	The Read Local Name command provides the ability to read the stored user-friendly name for the Bluetooth device.
Write Local Name Command	1.1	The Write Local Name command provides the ability to modify the user-friendly name for the Bluetooth device.
Read Class of Device Command	1.1	The Read Class of Device command will read the value for the Class of Device configuration parameter, which is used to indicate its capabilities to other devices.
Write Class of Device Command	1.1	The Write Class of Device command will write the value for the Class_of_Device configuration parameter, which is used to indicate its capabilities to other devices.
Read Number Of Supported IAC Command	1.1	The Read Number of Supported IAC command will read the value for the number of Inquiry Access Codes (IAC) that the local Bluetooth device can simultaneously listen for during an Inquiry Scan.
Read Current IAC LAP Command	1.1	The Read Current IAC LAP command will read the LAP(s) used to create the Inquiry Access Codes (IAC) that the local Bluetooth device is simultaneously scanning for during Inquiry Scans.
Write Current IAC LAP Command	1.1	The Write Current IAC LAP command will write the LAP(s) used to create the Inquiry Access Codes (IAC) that the local Bluetooth device is simultaneously scanning for during Inquiry Scans.
Read Scan Enable Command	1.1	The Read Scan Enable command will read the value for the Scan Enable configuration parameter, which controls whether or not the Bluetooth device will periodically scan for page attempts and/or inquiry requests from other Bluetooth devices.
Write Scan Enable Command	1.1	The Write Scan Enable command will write the value for the Scan Enable configuration parameter, which controls whether or not the Bluetooth device will periodically scan for page attempts and/or inquiry requests from other Bluetooth devices.

Table 3.5: Controller configuration

3.6 DEVICE DISCOVERY

The device discovery group of commands and events allow a device to discovery other devices in the surrounding area.

Name	Vers.	Summary description
Inquiry Command	1.1	The Inquiry command will cause the Bluetooth device to enter Inquiry Mode. Inquiry Mode is used to discovery other nearby Bluetooth devices.
Inquiry Result Event	1.1	The Inquiry Result event indicates that a Bluetooth device or multiple Bluetooth devices have responded so far during the current Inquiry process.
Inquiry Result with RSSI Event	1.2	The Inquiry Result with RSSI event indicates that a Bluetooth device or multiple Bluetooth devices have responded so far during the current Inquiry process.
Inquiry Cancel Command	1.1	The Inquiry Cancel command will cause the Bluetooth device to stop the current Inquiry if the Bluetooth device is in Inquiry Mode.
Inquiry Complete Event	1.1	The Inquiry Complete event indicates that the Inquiry is finished.
Periodic Inquiry Mode Command	1.1	The Periodic Inquiry Mode command is used to configure the Bluetooth device to perform an automatic Inquiry based on a specified period range.
Exit Periodic Inquiry Mode Command	1.1	The Exit Periodic Inquiry Mode command is used to end the Periodic Inquiry mode when the local device is in Periodic Inquiry Mode.
Read Inquiry Scan Activity Command	1.1	The Read Inquiry Scan Activity command will read the value for Inquiry Scan Interval and Inquiry Scan Window configuration parameters. Inquiry Scan Interval defines the amount of time between consecutive inquiry scans. Inquiry Scan Window defines the amount of time for the duration of the inquiry scan.
Write Inquiry Scan Activity Command	1.1	The Write Inquiry Scan Activity command will write the value for Inquiry Scan Interval and Inquiry Scan Window configuration parameters. Inquiry Scan Interval defines the amount of time between consecutive inquiry scans. Inquiry Scan Window defines the amount of time for the duration of the inquiry scan.
Read Inquiry Scan Type Command	1.2	The Read Inquiry Scan Type command is used to read the Inquiry Scan Type configuration parameter of the local Bluetooth device. The Inquiry Scan Type configuration parameter can set the inquiry scan to either normal or interlaced scan.

Table 3.6: Device discovery

Name	Vers.	Summary description
Write Inquiry Scan Type Command	1.2	The Write Inquiry Scan Type command is used to write the Inquiry Scan Type configuration parameter of the local Bluetooth device. The Inquiry Scan Type configuration parameter can set the inquiry scan to either normal or interlaced scan.
Read Inquiry Mode Command	1.2	The Read Inquiry Mode command is used to read the Inquiry Mode configuration parameter of the local Bluetooth device.
Write Inquiry Mode Command	1.2	The Write Inquiry Mode command is used to write the Inquiry Mode configuration parameter of the local Bluetooth device.

Table 3.6: Device discovery

3.7 CONNECTION SETUP

The connection setup group of commands and events are used to allow a device to make a connection to another device.

Name	Vers.	Summary description
Create Connection Command	1.1	The Create Connection command will cause the link manager to create an ACL connection to the Bluetooth device with the BD_ADDR specified by the command parameters.
Connection Request Event	1.1	The Connection Request event is used to indicate that a new incoming connection is trying to be established.
Accept Connection Request Command	1.1	The Accept Connection Request command is used to accept a new incoming connection request.
Reject Connection Request Command	1.1	The Reject Connection Request command is used to decline a new incoming connection request.
Create Connection Cancel Command	1.2	The Create Connection Cancel Command is used to cancel an ongoing Create Connection.
Connection Complete Event	1.1	The Connection Complete event indicates to both of the Hosts forming the connection that a new connection has been established.
Disconnect Command	1.1	The Disconnect command is used to terminate an existing connection.
Disconnection Complete Event	1.1	The Disconnection Complete event occurs when a connection has been terminated.
Read Page Timeout Command	1.1	The Read Page Timeout command will read the value for the Page Reply Timeout configuration parameter, which determines the time the Bluetooth controller will wait for the remote device to respond to a connection request before the local device returns a connection failure.
Write Page Timeout Command	1.1	The Write Page Timeout command will write the value for the Page Reply Timeout configuration parameter, which allows the Bluetooth hardware to define the amount of time a connection request will wait for the remote device to respond before the local device returns a connection failure.
Read Page Scan Activity Command	1.1	The Read Page Scan Activity command will read the values for the Page Scan Interval and Page Scan Window configuration parameters. Page Scan Interval defines the amount of time between consecutive page scans. Page Scan Window defines the duration of the page scan.

Table 3.7: Connection setup

Name	Vers.	Summary description
Write Page Scan Activity Command	1.1	The Write Page Scan Activity command will write the value for Page Scan Interval and Page Scan Window configuration parameters. Page Scan Interval defines the amount of time between consecutive page scans. Page Scan Window defines the duration of the page scan.
Page Scan Repetition Mode Change Event	1.1	The Page Scan Repetition Mode Change event indicates that the connected remote Bluetooth device with the specified Connection_Handle has successfully changed the Page_Scan_Repetition_Mode (SR)."
Read Page Scan Type Command	1.2	The Read Page Scan Type command is used to read the page scan type of the local Bluetooth device. The Page Scan Type configuration parameter can set the page scan to either normal or interlaced scan.
Write Page Scan Type Command	1.2	The Write Page Scan Type command is used to write the page scan type of the local Bluetooth device. The Page Scan Type configuration parameter can set the page scan to either normal or interlaced scan.
Read Connection Accept Timeout Command	1.1	The Read Connection Accept Timeout command will read the value for the Connection Accept Timeout configuration parameter, which allows the Bluetooth hardware to automatically deny a connection request after a specified period has occurred, and to refuse a new connection.
Write Connection Accept Timeout Command	1.1	The Write Connection Accept Timeout command will write the value for the Connection Accept Timeout configuration parameter, which allows the Bluetooth hardware to automatically deny a connection request after a specified period has occurred, and to refuse a new connection.
Read Page Scan Period Mode Command	1.1	The Read Page Scan Period Mode command is used to read the mandatory Page Scan Period Mode of the local Bluetooth device.
Write Page Scan Period Mode Command	1.1	The Write Page Scan Period Mode command is used to write the mandatory Page Scan Period Mode of the local Bluetooth device.

Table 3.7: Connection setup

3.8 REMOTE INFORMATION

The remote information group of commands and events allows information about a remote devices configuration to be discovered.

Name	Vers.	Summary description
Remote Name Request Command	1.1	The Remote Name Request command is used to obtain the user-friendly name of another Bluetooth device.
Remote Name Request Cancel Command	1.2	The Remote Name Request Cancel Command is used to cancel an ongoing Remote Name Request.
Remote Name Request Complete Event	1.1	The Remote Name Request Complete event is used to indicate a remote name request has been completed.
Read Remote Supported Features Command	1.1	The Read Remote Supported Features command requests a list of the supported features of a remote device.
Read Remote Supported Features Complete Event	1.1	The Read Remote Supported Features Complete event is used to indicate the completion of the process of the Link Manager obtaining the supported features of the remote Bluetooth device specified by the Connection Handle event parameter.
Read Remote Extended Features Command	1.2	The Read Remote Extended Features command requests a list of the supported extended features of a remote device
Read Remote Extended Features Complete Event	1.2	The Read Remote Extended Features Complete Event is used to indicate the completion of the process of the Link Manager obtaining the supported Extended features of the remote Bluetooth device specified by the connection handle event parameter.
Read Remote Version Information Command	1.1	The Read Remote Version Information command will read the values for the version information for the remote Bluetooth device.
Read Remote Version Information Complete Event	1.1	The Read Remote Version Information Complete event is used to indicate the completion of the process of the Link Manager obtaining the version information of the remote Bluetooth device specified by the Connection Handle event parameter.

Table 3.8: Remote information

3.9 SYNCHRONOUS CONNECTIONS

The synchronous connections group of commands and events allows synchronous connections to be created.

Name	Vers.	Summary description
Setup Synchronous Connection Command	1.2	The Setup Synchronous Connection command adds a new or modifies an existing synchronous logical transport (SCO or eSCO) on a physical link depending on the Connection Handle parameter specified.
Synchronous Connection Complete Event	1.2	The Synchronous Connection Complete event indicates to both the Hosts that a new Synchronous connection has been established.
Synchronous Connection Changed event	1.2	The Synchronous Connection Changed event indicates to the Host that an existing Synchronous connection has been reconfigured.
Accept Synchronous Connection Request Command	1.2	The Accept_Synchronous_Connection_Request command is used to accept an incoming request for a synchronous connection and to inform the local Link Manager about the acceptable parameter values for the synchronous connection.
Reject Synchronous Connection Request Command	1.2	The Reject_Synchronous_Connection_Request is used to decline an incoming request for a synchronous link.
Read Voice Setting Command	1.1	The Read Voice Setting command will read the values for the Voice Setting configuration parameter, which controls all the various settings for the voice connections.
Write Voice Setting Command	1.1	The Write Voice Setting command will write the values for the Voice Setting configuration parameter, which controls all the various settings for the voice connections.

Table 3.9: Synchronous connections

3.10 CONNECTION STATE

The connection state group of commands and events allows the configuration of a link, especially for low power operation.

Name	Vers.	Summary description
Mode Change Event	1.1	The Mode Change event is used to indicate that the current mode has changed.
Max Slots Change Event	1.1	The Max Slots Change event it used to indicate a change in the max slots by the LM.
Hold Mode Command	1.1	The Hold Mode command is used to initiate Hold Mode.
Sniff Mode Command	1.1	The Sniff Mode command is used to alter the behavior of the LM and have the LM place the local or remote device into the sniff mode.
Exit Sniff Mode Command	1.1	The Exit Sniff Mode command is used to end the sniff mode for a connection handle which is currently in sniff mode.
Park State Command	1.1	The Park State command is used to alter the behavior of the LM and have the LM place the local or remote device into the park state.
Exit Park State Command	1.1	The Exit Park State command is used to switch the Bluetooth device from park state back to active mode.
Read Link Policy Settings Command	1.1	The Read Link Policy Settings command will read the Link Policy configuration parameter for the specified Connection Handle. The Link Policy settings allow the Host to specify which Link Modes the LM can use for the specified Connection Handle.
Write Link Policy Settings Command	1.1	The Write Link Policy Settings command will write the Link Policy configuration parameter for the specified Connection Handle. The Link Policy settings allow the Host to specify which Link Modes the LM can use for the specified Connection Handle.
Read Default Link Policy Settings Command	1.2	The Read Default Link Policy Settings command will read the Default Link Policy configuration parameter for all new connections.
Write Default Link Policy Settings Command	1.2	The Write Default Link Policy Settings command will write the Default Link Policy configuration parameter for all new connections.

Table 3.10: Connection state

3.11 PICONET STRUCTURE

The piconet structure group of commands and events allows the discovery and reconfiguration a piconet.

Name	Vers.	Summary description
Role Discovery Command	1.1	The Role Discovery command is used for a Bluetooth device to determine which role the device is performing for a particular Connection Handle.
Switch Role Command	1.1	The Switch Role command is used to switch master and slave roles of the devices on either side of a connection.
Role Change Event	1.1	The Role Change event is used to indicate that the current Bluetooth role related to the particular connection has been changed.

Table 3.11: Piconet structure

3.12 QUALITY OF SERVICE

The quality of service group of commands and events allows the configuration of links to allow for quality of service parameters to be specified.

Name	Vers.	Summary description
Flow Specification Command	1.2	The Flow Specification command is used to specify the flow parameters for the traffic carried over the ACL connection identified by the Connection Handle.
Flow Specification Complete Event	1.2	The Flow Specification Complete event is used to inform the Host about the Quality of Service for the ACL connection the Controller is able to support.
QoS Setup Command	1.1	The QoS Setup command is used to specify Quality of Service parameters for a connection handle.
QoS Setup Complete Event	1.1	The QoS Setup Complete event is used to indicate that QoS is setup.
QoS Violation Event	1.1	The QoS Violation event is used to indicate the Link Manager is unable to provide the current QoS requirement for the Connection Handle.
Flush Command	1.1	The Flush command is used to discard all data that is currently pending for transmission in the Controller for the specified connection handle.
Flush Occurred Event	1.1	The Flush Occurred event is used to indicate that, for the specified Connection Handle, the data to be transmitted has been discarded.
Read Automatic Flush Timeout Command	1.1	The Read Automatic Flush Timeout will read the value for the Flush Timeout configuration parameter for the specified connection handle. The Flush Timeout parameter is only used for ACL connections.
Write Automatic Flush Timeout Command	1.1	The Write Automatic Flush Timeout will write the value for the Flush Timeout configuration parameter for the specified connection handle. The Flush Timeout parameter is only used for ACL connections.
Read Failed Contact Counter Command	1.1	The Read Failed Contact Counter will read the value for the Failed Contact Counter configuration parameter for a particular connection to another device.
Reset Failed Contact Counter Command	1.1	The Reset Failed Contact Counter will reset the value for the Failed Contact Counter configuration parameter for a particular connection to another device.
Read Num Broadcast Retransmissions Command	1.1	The Read Num Broadcast Retransmissions command will read the parameter value for the Number of Broadcast Retransmissions for the device.
Write Num Broadcast Retransmissions Command	1.1	The Write Num Broadcast Retransmissions command will write the parameter value for the Number of Broadcast Retransmissions for the device.

Table 3.12: Quality of service

3.13 PHYSICAL LINKS

The physical links commands and events allows configuration of the physical link.

Name	Vers.	Summary description
Read Link Supervision Timeout Command	1.1	The Read Link Supervision Timeout command will read the value for the Link Supervision Timeout configuration parameter for the device. This parameter is used by the device to determine link loss.
Write Link Supervision Timeout Command	1.1	The Write Link Supervision Timeout command will write the value for the Link Supervision Timeout configuration parameter for the device. This parameter is used by the device to determine link loss.
Read AFH Channel Assessment Mode Command	1.2	The Read AFH Channel Assessment Mode command will read the value for the AFH Channel Classification Mode parameter. This value is used to enable or disable the Controller's channel assessment scheme.
Write AFH Channel Assessment Mode Command	1.2	The Write AFH Channel Assessment Mode command will write the value for the Channel Classification Mode configuration parameter. This value is used to enable or disable the Controller's channel assessment scheme.
Set AFH Host Channel Classification Command	1.2	The Set AFH Host Channel Classification command allows the Host to specify a channel classification based on its "local information".
Change Connection Packet Type Command	1.1	The Change Connection Packet Type command is used to change which packet types can be used for a connection that is currently established.
Connection Packet Type Changed Event	1.1	The Connection Packet Type Changed event is used to indicate the completion of the process of the Link Manager changing the packet type mask used for the specified Connection Handle.

Table 3.13: Physical links

3.14 HOST FLOW CONTROL

The Host flow control group of commands and events allows flow control to be used towards the Host.

Name	Vers.	Summary description
Host Buffer Size Command	1.1	The Host Buffer Size command is used by the Host to notify the Controller about its buffer sizes for ACL and synchronous data. The Controller will segment the data to be transmitted from the Controller to the Host, so that data contained in HCI Data Packets will not exceed these sizes.
Set Event Mask Command	1.1	The Set Event Mask command is used to control which events are generated by the HCI for the Host.
Set Event Filter Command	1.1	The Set Event Filter command is used by the Host to specify different event filters. The Host may issue this command multiple times to request various conditions for the same type of event filter and for different types of event filters.
Set Controller To Host Flow Control Command	1.1	The Set Controller To Host Flow Control command is used by the Host to turn flow control on or off in the direction from the Controller to the Host.
Host Number Of Completed Packets Command	1.1	The Host Number Of Completed Packets command is used by the Host to indicate to the Controller when the Host is ready to receive more HCI packets for any connection handle.
Data Buffer Overflow Event	1.1	The Data Buffer Overflow event is used to indicate that the Controller's data buffers have overflowed, because the Host has sent more packets than allowed.
Read Synchronous Flow Control Enable Command	1.1	The Read Synchronous Flow Control Enable command provides the ability to read the Synchronous Flow Control Enable setting. By using this setting, the Host can decide if the Controller will send Number Of Completed Packets events for Synchronous Connection Handles.
Write Synchronous Flow Control Enable Command	1.1	The Write Synchronous Flow Control Enable command provides the ability to write the Synchronous Flow Control Enable setting. By using this setting, the Host can decide if the Controller will send Number Of Completed Packets events for Synchronous Connection Handles.

Table 3.14: Controller flow control.

3.15 LINK INFORMATION

The link information group of commands and events allows information about a link to be read.

Name	Vers.	Summary description
Read LMP Handle Command	1.2	The Read LMP Handle command will read the current LMP Handle associated with the Connection Handle.
Read Transmit Power Level Command	1.1	The Read Transmit Power Level command will read the values for the Transmit Power Level parameter for the specified Connection Handle.
Read Link Quality Command	1.1	The Read Link Quality command will read the value for the Link Quality for the specified Connection Handle.
Read RSSI Command	1.1	The Read RSSI command will read the value for the Received Signal Strength Indication (RSSI) for a connection handle to another Bluetooth device.
Read Clock Offset Command	1.1	The Read Clock Offset command allows the Host to read the clock offset of remote devices.
Read Clock Offset Complete Event	1.1	The Read Clock Offset Complete event is used to indicate the completion of the process of the LM obtaining the Clock offset information.
Read Clock Command	1.2	The Read Clock command will read an estimate of a piconet or the local Bluetooth Clock.
Read AFH Channel Map Command	1.2	The Read AFH Channel Map command will read the current state of the channel map for a connection.

Table 3.15: Link information

3.16 AUTHENTICATION AND ENCRYPTION

The authentication and encryption group of commands and events allows authentication of a remote device and then encryption of the link to one or more remote devices.

Name	Vers.	Summary description
Read Authentication Enable Command	1.1	The Read Authentication Enable command will read the value for the Authentication Enable parameter, which controls whether the Bluetooth device will require authentication for each connection with other Bluetooth devices.
Write Authentication Enable Command	1,1	The Write Authentication Enable command will write the value for the Authentication Enable parameter, which controls whether the Bluetooth device will require authentication for each connection with other Bluetooth devices.
Read Encryption Mode Command	1.1	The Read Encryption Mode command will read the value for the Encryption Mode parameter, which controls whether the Bluetooth device will require encryption for each connection with other Bluetooth devices.
Write Encryption Mode Command	1.1	The Write Encryption Mode command will write the value for the Encryption Mode parameter, which controls whether the Bluetooth device will require encryption for each connection with other Bluetooth devices.
Link Key Request Event	1.1	The Link Key Request event is used to indicate that a Link Key is required for the connection with the device specified in BD_ADDR.
Link Key Request Reply Command	1.1	The Link Key Request Reply command is used to reply to a Link Key Request event from the Controller, and specifies the Link Key stored on the Host to be used as the link key for the connection with the other Bluetooth device specified by BD_ADDR.
Link Key Request Negative Reply Command	1.1	The Link Key Request Negative Reply command is used to reply to a Link Key Request event from the Controller if the Host does not have a stored Link Key for the connection with the other Bluetooth Device specified by BD_ADDR.
PIN Code Request Event	1.1	The PIN Code Request event is used to indicate that a PIN code is required to create a new link key for a connection.
PIN Code Request Reply Command	1.1	The PIN Code Request Reply command is used to reply to a PIN Code Request event from the Controller and specifies the PIN code to use for a connection.

Table 3.16: Authentication and encryption

Name	Vers.	Summary description
PIN Code Request Negative Reply Command	1.1	The PIN Code Request Negative Reply command is used to reply to a PIN Code Request event from the Controller when the Host cannot specify a PIN code to use for a connection.
Link Key Notification Event	1.1	The Link Key Notification event is used to indicate to the Host that a new Link Key has been created for the connection with the device specified in BD_ADDR.
Authentication Requested Command	1.1	The Authentication Requested command is used to establish authentication between the two devices associated with the specified Connection Handle.
Authentication Complete Event	1.1	The Authentication Complete event occurs when authentication has been completed for the specified connection.
Set Connection Encryption Command	1.1	The Set Connection Encryption command is used to enable and disable the link level encryption.
Encryption Change Event	1.1	The Encryption Change event is used to indicate that the change in the encryption has been completed for the Connection Handle specified by the Connection Handle event parameter.
Change Connection Link Key Command	1.1	The Change Connection Link Key command is used to force both devices of a connection associated to the connection handle, to generate a new link key.
Change Connection Link Key Complete Event	1.1	The Change Connection Link Key Complete event is used to indicate that the change in the Link Key for the Connection Handle specified by the Connection Handle event parameter had been completed.
Master Link Key Command	1.1	The Master Link Key command is used to force both devices of a connection associated to the connection handle to use the temporary link key of the Master device or the regular link keys.
Master Link Key Complete Event	1.1	The Master Link Key Complete event is used to indicate that the change in the temporary Link Key or in the semi-permanent link keys on the Bluetooth master side has been completed.
Read PIN Type Command	1.1	The Read PIN Type command is used for the Host to read the value that is specified to indicate whether the Host supports variable PIN or only fixed PINs.
Write PIN Type Command	1.1	The Write PIN Type command is used for the Host to specify whether the Host supports variable PIN or only fixed PINs.
Read Stored Link Key Command	1.1	The Read Stored Link Key command provides the ability to read one or more link keys stored in the Controller.

Table 3.16: Authentication and encryption

Name	Vers.	Summary description
Return Link Keys Event	1.1	The Return Link Keys event is used to return stored link keys after a Read Stored Link Key command is used.
Write Stored Link Key Command	1.1	The Write Stored Link Key command provides the ability to write one or more link keys to be stored in the Controller.
Delete Stored Link Key Command	1.1	The Delete Stored Link Key command provides the ability to remove one or more of the link keys stored in the Controller.
Create New Unit Key Command	1.1	The Create New Unit Key command is used to create a new unit key.

Table 3.16: Authentication and encryption

3.17 TESTING

The testing group of commands and events allows a device to be placed into a special testing mode to allow for testing to be performed.

Name	Vers.	Summary description
Read Loopback Mode Command	1.1	The Read Loopback Mode will read the value for the setting of the Controllers Loopback Mode. The setting of the Loopback Mode will determine the path of information.
Write Loopback Mode Command	1.1	The Write Loopback Mode will write the value for the setting of the Controllers Loopback Mode. The setting of the Loopback Mode will determine the path of information.
Loopback Command Event	1.1	The Loopback Command event is used to loop back all commands that the Host sends to the Controller with some exceptions.
Enable Device Under Test Mode Command	1.1	The Enable Device Under Test Mode command will allow the local Bluetooth module to enter test mode via LMP test commands. The Host issues this command when it wants the local device to be the DUT for the Testing scenarios as described in the Bluetooth Test Mode document.

Table 3.17: Testing

3.18 ALPHABETICAL LIST OF COMMANDS AND EVENTS

Commands/Events	Group
Accept Connection Request Command	Connection Setup
Authentication Complete Event	Authentication and Encryption
Authentication Requested Command	Authentication and Encryption
Change Connection Link Key Command	Authentication and Encryption
Change Connection Link Key Complete Event	Authentication and Encryption
Change Connection Packet Type Command	Physical Links
Command Complete Event	Generic Events
Command Status Event	Generic Events
Connection Complete Event	Connection Setup
Connection Packet Type Changed Event	Physical Links
Connection Request Event	Connection Setup
Create Connection Cancel Command	Connection Setup
Create Connection Command	Connection Setup
Create New Unit Key Command	Authentication and Encryption
Data Buffer Overflow Event	Host Flow Control
Delete Stored Link Key Command	Authentication and Encryption
Disconnect Command	Connection Setup
Disconnection Complete Event	Connection Setup
Enable Device Under Test Mode Command	Testing
Encryption Change Event	Authentication and Encryption
Exit Park State Command	Connection State
Exit Periodic Inquiry Mode Command	Device Discovery
Exit Sniff Mode Command	Connection State
Flow Specification Command	Quality of Service
Flow Specification Complete Event	Quality of Service
Flush Command	Quality of Service
Flush Occurred Event	Quality of Service
Hardware Error Eventt	Generic Events
Hold Mode Command	Connection State
Host Buffer Size Command	Host Flow Control

Table 3.18: Alphabetical list of commands and events.

Commands/Events	Group
Host Number Of Completed Packets Command	Host Flow Control
Inquiry Cancel Command	Device Discovery
Inquiry Command	Device Discovery
Inquiry Complete Event	Device Discovery
Inquiry Result Event	Device Discovery
Inquiry Result with RSSI Event	Device Discovery
Link Key Notification Event	Authentication and Encryption
Link Key Request Event	Authentication and Encryption
Link Key Request Negative Reply Command	Authentication and Encryption
Link Key Request Reply Command	Authentication and Encryption
Loopback Command Event	Testing
Master Link Key Command	Authentication and Encryption
Master Link Key Complete Event	Authentication and Encryption
Max Slots Change Event	Connection State
Mode Change Event	Connection State
Number Of Completed Packets Event	Controller Flow Control
Page Scan Repetition Mode Change Event	Connection Setup
Park State Command	Connection State
Periodic Inquiry Mode Command	Device Discovery
PIN Code Request Event	Authentication and Encryption
PIN Code Request Negative Reply Command	Authentication and Encryption
PIN Code Request Reply Command	Authentication and Encryption
QoS Setup Command	Quality of Service
QoS Setup Complete Event	Quality of Service
QoS Violation Event	Quality of Service
Read AFH Channel Assessment Mode Command	Physical Links
Read AFH Channel Map Command	Link Information
Read Authentication Enable Command	Authentication and Encryption
Read Automatic Flush Timeout Command	Quality of Service
Read BD_ADDR Command	Controller Information
Read Buffer Size Command	Controller Flow Control
Read Class of Device Command	Controller Information

Table 3.18: Alphabetical list of commands and events.

Commands/Events	Group
Read Clock Command	Link Information
Read Clock Offset Command	Link Information
Read Clock Offset Complete Event	Link Information
Read Connection Accept Timeout Command	Connection Setup
Read Current IAC LAP Command	Controller Information
Read Default Link Policy Settings Command	Connection State
Read Encryption Mode Command	Authentication and Encryption
Read Failed Contact Counter Command	Quality of Service
Read Hold Mode Activity Command	Connection State
Read Inquiry Mode Command	Device Discovery
Read Inquiry Scan Activity Command	Device Discovery
Read Inquiry Scan Type Command	Device Discovery
Read Link Policy Settings Command	Connection State
Read Link Quality Command	Link Information
Read Link Supervision Timeout Command	Physical Links
Read LMP Handle Command	Link Information
Read Local Extended Features Command	Controller Information
Read Local Name Command	Controller Configuration
Read Local Supported Commands Command	Controller Information
Read Local Supported Features Command	Controller Information
Read Local Version Information Command	Controller Information
Read Loopback Mode Command	Testing
Read Num Broadcast Retransmissions Command	Quality of Service
Read Number Of Supported IAC Command	Controller Information
Read Page Scan Activity Command	Connection Setup
Read Page Scan Period Mode Command	Connection Setup
Read Page Scan Type Command	Connection Setup
Read Page Timeout Command	Connection Setup
Read PIN Type Command	Authentication and Encryption
Read Remote Extended Features Command	Remote Information
Read Remote Extended Features Complete Event	Remote Information
Read Remote Supported Features Command	Remote Information

Table 3.18: Alphabetical list of commands and events.

Commands/Events	Group
Read Remote Supported Features Complete Event	Remote Information
Read Remote Version Information Command	Remote Information
Read Remote Version Information Complete Event	Remote Information
Read RSSI Command	Link Information
Read Scan Enable Command	Controller Information
Read Stored Link Key Command	Authentication and Encryption
Read Synchronous Flow Control Enable Command	Host Flow Control
Read Transmit Power Level Command	Link Information
Read Voice Setting Command	Synchronous Connections
Reject Connection Request Command	Connection Setup
Remote Name Request Cancel Command	Remote Information
Remote Name Request Command	Remote Information
Remote Name Request Complete Event	Remote Information
Reset Command	Device Setup
Reset Failed Contact Counter Command	Quality of Service
Return Link Keys Event	Authentication and Encryption
Role Change Event	Piconet Structure
Role Discovery Command	Piconet Structure
Set AFH Host Channel Classification Command	Physical Links
Set Connection Encryption Command	Authentication and Encryption
Set Controller To Host Flow Control Command	Host Flow Control
Set Event Filter Command	Host Flow Control
Set Event Mask Command	Host Flow Control
Setup Synchronous Connection Command	Synchronous Connections
Sniff Mode Command	Connection State
Switch Role Command	Piconet Structure
Synchronous Connection Changed event	Synchronous Connections
Synchronous Connection Complete Event	Synchronous Connections
Write AFH Channel Assessment Mode Command	Physical Links
Write Authentication Enable Command	Authentication and Encryption
Write Automatic Flush Timeout Command	Quality of Service
Write Class of Device Command	Controller Information

Table 3.18: Alphabetical list of commands and events.

Commands/Events	Group
Write Connection Accept Timeout Command	Connection Setup
Write Current IAC LAP Command	Controller Information
Write Default Link Policy Settings Command	Connection State
Write Encryption Mode Command	Authentication and Encryption
Write Hold Mode Activity Command	Connection State
Write Inquiry Mode Command	Device Discovery
Write Inquiry Scan Activity Command	Device Discovery
Write Inquiry Scan Type Command	Device Discovery
Write Link Policy Settings Command	Connection State
Write Link Supervision Timeout Command	Physical Links
Write Local Name Command	Controller Information
Write Loopback Mode Command	Testing
Write Num Broadcast Retransmissions Command	Quality of Service
Write Page Scan Activity Command	Connection Setup
Write Page Scan Period Mode Command	Connection Setup
Write Page Scan Type Command	Connection Setup
Write Page Timeout Command	Connection Setup
Write PIN Type Command	Authentication and Encryption
Write Scan Enable Command	Controller Information
Write Stored Link Key Command	Authentication and Encryption
Write Synchronous Flow Control Enable Command	Host Flow Control
Write Voice Setting Command	Synchronous Connections

Table 3.18: Alphabetical list of commands and events.

4 HCI FLOW CONTROL

Flow control shall be used in the direction from the Host to the Controller to avoid overflowing the Controller data buffers with ACL data destined for a remote device (using a connection handle) that is not responding. The Host manages the data buffers of the Controller.

4.1 HOST TO CONTROLLER DATA FLOW CONTROL

On initialization, the Host shall issue the Read Buffer Size command. Two of the return parameters of this command determine the maximum size of HCI ACL and synchronous Data Packets (excluding header) sent from the Host to the Controller. There are also two additional return parameters that specify the total number of HCI ACL and synchronous Data Packets that the Controller may have waiting for transmission in its buffers.

When there is at least one connection to another device, or when in local loop-back mode, the Controller shall use the Number Of Completed Packets event to control the flow of data from the Host. This event contains a list of connection handles and a corresponding number of HCI Data Packets that have been completed (transmitted, flushed, or looped back to the Host) since the previous time the event was returned (or since the connection was established, if the event has not been returned before for a particular connection handle).

Based on the information returned in this event, and the return parameters of the Read Buffer Size command that specify the total number of HCI ACL and synchronous Data Packets that can be stored in the Controller, the Host decides for which Connection Handles the following HCI Data Packets should be sent.

Every time it has sent an HCI Data Packet, the Host shall assume that the free buffer space for the corresponding link type (ACL, SCO or eSCO) in the Controller has decreased by one HCI Data Packet.

Each Number Of Completed Packets event received by the Host provides information about how many HCI Data Packets have been completed (transmitted or flushed) for each Connection Handle since the previous Number Of Completed Packets event was sent to the Host. It can then calculate the actual current buffer usage.

When the Controller has completed one or more HCI Data Packet(s) it shall send a Number Of Completed Packets event to the Host, until it finally reports that all the pending HCI Data Packets have been completed. The frequency at which this event is sent is manufacturer specific.

Note: The Number Of Completed Packets events will not report on synchronous connection handles if Synchronous Flow Control is disabled. (See Read/

Write Synchronous Flow Control Enable, Section 7.3.38 on page 486 and Section 7.3.39 on page 487)

For each individual Connection Handle, the data must be sent to the Controller in HCI Data Packets in the order in which it was created in the Host. The Controller shall also transmit data on the air that is received from the Host for a given Connection Handle in the same order as it is received from the Host.

Data that is received on the air from another device shall, for the corresponding Connection Handle, be sent in HCI Data Packets to the Host in the same order as it is received. This means the scheduling shall be decided separately for each Connection Handle basis. For each individual Connection Handle, the order of the data shall not be changed from the order in which the data has been created.

4.2 CONTROLLER TO HOST DATA FLOW CONTROL

In some implementations, flow control may also be necessary in the direction from the Controller to the Host. The Set Host Controller To Host Flow Control command can be used to turn flow control on or off in that direction.

On initialization, the Host uses the Host Buffer Size command to notify the Controller about the maximum size of HCI ACL and synchronous Data Packets sent from the Controller to the Host. The command also contains two additional command parameters to notify the Controller about the total number of ACL and synchronous Data Packets that can be stored in the data buffers of the Host.

The Host uses the Host Number Of Completed Packets command in exactly the same way as the Controller uses the Number Of Completed Packets event as was previously described in this section.

The Host Number Of Completed Packets command is a special command for which no command flow control is used, and which can be sent anytime there is a connection or when in local loopback mode. The command also has no event after the command has completed. This makes it possible for the flow control to work in exactly the same way in both directions, and the flow of normal commands will not be disturbed.

4.3 DISCONNECTION BEHAVIOUR

When the Host receives a Disconnection Complete event, the Host shall assume that all unacknowledged HCI Data Packets that have been sent to the Controller for the returned Connection Handle have been flushed, and that the corresponding data buffers have been freed. The Controller does not have to notify the Host about this in a Number Of Completed Packets event.

If flow control is also enabled in the direction from the Controller to the Host, the Controller may, after it has sent a Disconnection Complete event, assume that the Host will flush its data buffers for the sent Connection Handle when it receives the Disconnection Complete event. The Host does not have to notify the Controller about this in a Host Number Of Completed Packets command.

4.4 COMMAND FLOW CONTROL

On initial power-on, and after a reset, the Host shall send a maximum of one outstanding HCI Command Packet until a Command Complete or Command Status event has been received.

The Command Complete and Command Status events contain a parameter called Num HCI Command Packets, which indicates the number of HCI Command Packets the Host is currently allowed to send to the Controller. The Controller may buffer one or more HCI command packets, but the Controller must start performing the commands in the order in which they are received. The Controller can start performing a command before it completes previous commands. Therefore, the commands do not always complete in the order they are started.

To indicate to the Host that the Controller is ready to receive HCI command packets, the Controller may generate a Command Complete event with the Command Opcode 0x0000, and the Num HCI Command Packets event parameter is set to 1 or more. Command Opcode 0x0000 is a NOP (No OPeration), and can be used to change the number of outstanding HCI command packets that the Host can send. The Controller may generate a Command Complete event with the Num HCI Command Packets event parameter set to zero to inform Host it must stop sending commands.

For most commands, a Command Complete event shall be sent to the Host when the Controller completes the command. Some commands are executed in the background and do not return a Command Complete event when they have been completed. Instead, the Controller shall send a Command Status event back to the Host when it has begun to execute the command. When the actions associated with the command have finished, an event that is associated with the command shall be sent by the Controller to the Host.

If the command does not begin to execute (for example, if there was a parameter error or the command is currently not allowed), the Command Status event shall be returned with the appropriate error code in the Status parameter, and the event associated with the sent command shall not be returned.

4.5 COMMAND ERROR HANDLING

If an error occurs for a command for which a Command Complete event is returned, the Return Parameters field may not contain all the return parameters specified for the command. The Status parameter, which explains the error reason and which is the first return parameter, shall always be returned. If there is a Connection Handle parameter or a BD_ADDR parameter right after the Status parameter, this parameter shall also be returned so that the Host can identify to which instance of a command the Command Complete event belongs. In this case, the Connection Handle or BD_ADDR parameter shall have exactly the same value as that in the corresponding command parameter. It is implementation specific whether more parameters will be returned in case of an error.

The above also applies to commands that have associated command specific completion events with a status parameter in their completion event, with two exceptions. The exceptions are the Connection Complete and the Synchronous Connection Complete events. On failure, for these two events only, the second parameter, Connection_Handle, is not valid and the third parameter, BD_ADDR, is valid for identification purposes. The validity of other parameters is likewise implementation specific for failed commands in this group.

Note: The BD_ADDR return parameter of the command Read BD_ADDR is not used to identify to which instance of the Read BD ADDR command the Command Complete event belongs. It is optional for the Controller to return this parameter in case of an error.

5 HCI DATA FORMATS

5.1 INTRODUCTION

The HCI provides a uniform command method of accessing the Bluetooth capabilities. The HCI Link commands provide the Host with the ability to control the link layer connections to other Bluetooth devices. These commands typically involve the Link Manager (LM) to exchange LMP commands with remote Bluetooth devices. For details see "Link Manager Protocol" on page 189 [Part C].

The HCI Policy commands are used to affect the behavior of the local and remote LM. These Policy commands provide the Host with methods of influencing how the LM manages the piconet. The Controller & Baseband, Informational, and Status commands provide the Host access to various registers in the Controller.

HCI commands may take different amounts of time to be completed. Therefore, the results of commands will be reported back to the Host in the form of an event. For example, for most HCI commands the Controller will generate the Command Complete event when a command is completed. This event contains the return parameters for the completed HCI command. For enabling the Host to detect errors on the HCI-Transport Layer, there needs to be a timeout between the transmission of the Host's command and the reception of the Controller's response (e.g. a Command Complete or Command Status event). Since the maximum response timeout is strongly dependent on the HCI-Transport Layer used, it is recommended to use a default value of one second for this timer. This amount of time is also dependent on the number of commands unprocessed in the command queue.

5.2 DATA AND PARAMETER FORMATS

- All values are in Binary and Hexadecimal Little Endian formats unless otherwise noted
- In addition, all parameters which can have negative values must use 2's complement when specifying values
- Arrayed parameters are specified using the following notation: ParameterA[i]. If more than one set of arrayed parameters are specified (e.g. ParameterA[i], ParameterB[i]), then the order of the parameters are as follows: ParameterA[0], ParameterB[0], ParameterA[1], ParameterB[1], ParameterA[2], ParameterB[2], … ParameterA[n], ParameterB[n]
- Unless noted otherwise, all parameter values are sent and received in Little Endian format (i.e. for multi-octet parameters the rightmost (Least Signification Octet) is transmitted first)
- All command and event parameters that are not-arrayed and all elements in an arrayed parameter have fixed sizes (an integer number of octets). The parameters and the size of each not arrayed parameter (or of each element in an arrayed parameter) contained in a command or an event is specified

for each command or event. The number of elements in an arrayed parameter is not fixed.

- Where bit strings are specified, the low order bit is the right hand bit, e.g. 0 is the low order bit in ‘10’.

5.3 CONNECTION HANDLES

Connection Handles are used to identify logical channels between the Host and Controller. Connection Handles are assigned by the Controller when a new logical link is created, using the Connection Complete or Synchronous Connection Complete events. Broadcast Connection Handles are handled differently, and are described below.

The first time the Host sends an HCI Data Packet with Broadcast_Flag set to 01b (active broadcast) or 10b (piconet broadcast) after a power-on or a reset, the value of the Connection Handle parameter must be a value which is not currently assigned by the Host Controller. The Host must use different connection handles for active broadcast and piconet broadcast.

The Host Controller must then continue to use the same connection handles for each type of broadcast until a reset is made. Note: The Host Controller must not send a Connection Complete event containing a new Connection_Handle that it knows is used for broadcast.

Note: In some situations, it may happen that the Host Controller sends a Connection Complete event before having interpreted a Broadcast packet received from the Host, and that the Connection_Handles of both Connection Complete event and HCI Data packet are the same. This conflict has to be avoided as follows:

If a Connection Complete event is received containing one of the connection handles used for broadcast, the Host has to wait before sending any packets for the new connection until it receives a Number Of Completed Packets event indicating that there are no pending broadcast packets belonging to the connection handle. In addition, the Host must change the Connection_Handle used for the corresponding type of broadcast to a Connection_Handle which is currently not assigned by the Host Controller.

This Connection_Handle must then be used for all the following broadcasts of that type until a reset is performed or the same conflict situation happens again. However, this will occur very rarely.

The Host Controller must, in the above conflict case, be able to distinguish between the Broadcast message sent by the Host and the new connection made (this could be even a new synchronous link) even though the connection handles are the same.

For an HCI Data Packet sent from the Host Controller to the Host where the Broadcast_Flag is 01 or 10, the Connection_Handle parameter should contain

the connection handle for the ACL connection to the master that sent the broadcast.

Note: Connection handles used for Broadcast do not identify an ACL point-to-point connection, so they must not be used in any command having a Connection_Handle parameter and they will not be returned in any event having a Connection_Handle parameter except the Number Of Completed Packets event.

5.4 EXCHANGE OF HCI-SPECIFIC INFORMATION

The Host Controller Transport Layer provides transparent exchange of HCI specific information. These transporting mechanisms provide the ability for the Host to send HCI commands, ACL data and synchronous data to the Controller. These transport mechanisms also provide the ability for the Host to receive HCI events, ACL data and synchronous data from the Controller. Since the Host Controller Transport Layer provides transparent exchange of HCI-specific information, the HCI specification specifies the format of the commands, events, and data exchange between the Host and the Controller. The next sections specify the HCI packet formats.

5.4.1 HCI Command Packet

The HCI Command Packet is used to send commands to the Controller from the Host. The format of the HCI Command Packet is shown in Figure 5.1, and the definition of each field is explained below.

The Controller must be able to accept HCI Command Packets with up to 255 bytes of data excluding the HCI Command Packet header.

Each command is assigned a 2 byte Opcode used to uniquely identify different types of commands. The Opcode parameter is divided into two fields, called the OpCode Group Field (OGF) and OpCode Command Field (OCF). The OGF occupies the upper 6 bits of the Opcode, while the OCF occupies the remaining 10 bits. The OGF of 0x3F is reserved for vendor-specific debug commands. The OGF of 0x3E is reserved for Bluetooth Logo Testing. The organization of the Opcodes allows additional information to be inferred without fully decoding the entire Opcode.

Note: the OGF composed of all ‘ones’ has been reserved for vendor-specific debug commands. These commands are vendor-specific and are used during manufacturing, for a possible method for updating firmware, and for debugging.

Note: the OGF composed of all ‘zeros’ and an OCF or all ‘zeros’ is the NOP command. This command Opcode may be used in Command Flow Control. (See Section 4.4 on page 347)

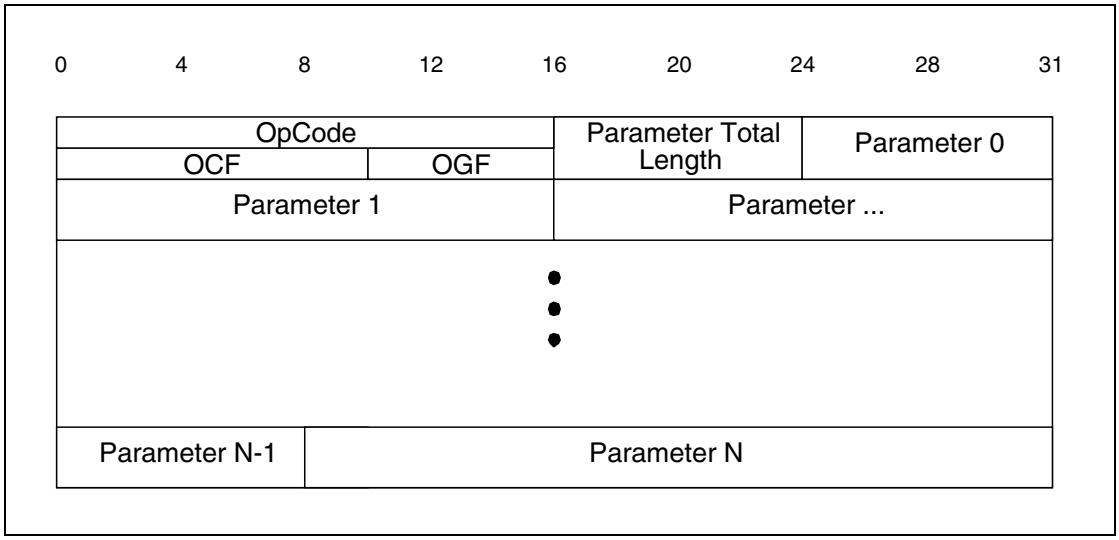

Figure 5.1: HCI Command Packet

Op_Code: *Size: 2 Octets*

Value	Parameter Description
0xXXXX	OGFRange (6 bits): 0x00-0x3F (0x3E reserved for Bluetooth logo testing and 0x3F reserved for vendor-specific debug commands) OCF Range (10 bits): 0x0000-0x03FF

Parameter_Total_Length: *Size: 1 Octet*

Value	Parameter Description
0xXX	Lengths of all of the parameters contained in this packet measured in octets. (N.B.: total length of parameters, not number of parameters)

Parameter 0 - N: *Size: Parameter Total Length*

Value	Parameter Description
0xXX	Each command has a specific number of parameters associated with it. These parameters and the size of each of the parameters are defined for each command. Each parameter is an integer number of octets in size.

5.4.2 HCI ACL Data Packets

HCI ACL Data Packets are used to exchange data between the Host and Controller. The format of the HCI ACL Data Packet is shown in Figure 5.2. The definition for each of the fields in the data packets is explained below.

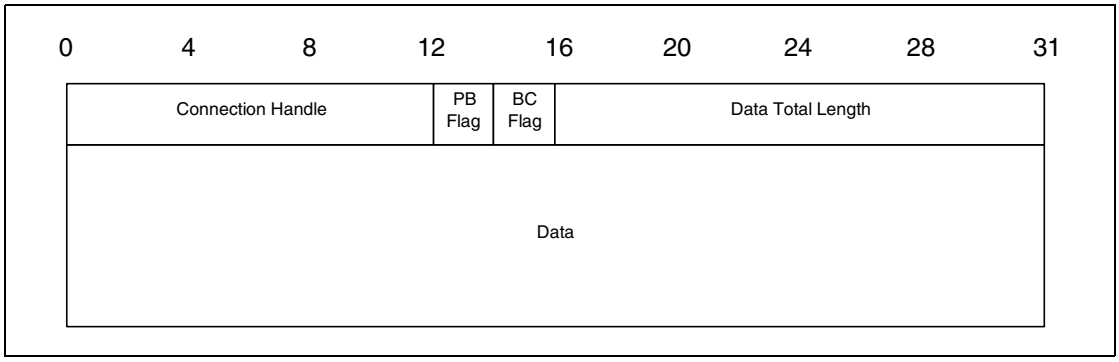

Figure 5.2: HCI ACL Data Packet

Connection_Handle: *Size: 12 Bits*

Value	Parameter Description
0xXXX	Connection Handle to be used for transmitting a data packet or segment. Range: 0x0000-0x0EFF (0x0F00 - 0x0FFF Reserved for future use)

Flags: *Size: 2 Bits*

The Flag Bits consist of the Packet_Boundary_Flag and Broadcast_Flag. The Packet_Boundary_Flag is located in bit 4 and bit 5, and the Broadcast_Flag is located in bit 6 and 7 in the second octet of the HCI ACL Data packet.

Packet_Boundary_Flag: *Size: 2 Bits*

Value	Parameter Description
00	Reserved for future use
01	Continuing fragment packet of Higher Layer Message
10	First packet of Higher Layer Message (i.e. start of an L2CAP packet)
11	Reserved for future use

Broadcast_Flag (in packet from Host to Controller): *Size: 2 Bits*

Value	Parameter Description
00	No broadcast. Only point-to-point.
01	Active Slave Broadcast: packet is sent to all active slaves (i.e. packet is usually not sent during park beacon slots), and it may be received by slaves in sniff mode or park state.
10	Parked Slave Broadcast: packet is sent to all slaves and all slaves in park state (i.e. packet is sent during park beacon slots if there are parked slaves), and it may be received by slaves in sniff mode.
11	Reserved for future use.

Broadcast_Flag (in packet from Controller to Host): *Size: 2 Bits*

Value	Parameter Description
00	Point-to-point
01	Packet received as a slave not in park state (either Active Slave Broadcast or Parked Slave Broadcast)
10	Packet received as a slave in park state (Parked Slave Broadcast)
11	Reserved for future use.

Note: active slave broadcast packets may be sent in park beacon slots.

Note: slaves in sniff mode may or may not receive a broadcast packet depending on whether they happen to be listening at sniff slots, when the packet is sent.

Data_Total_Length: *Size: 2 Octets*

Value	Parameter Description
0xXXXX	Length of data measured in octets.

5.4.3 HCI Synchronous Data Packets

HCI synchronous (SCO and eSCO) Data Packets are used to exchange synchronous data between the Host and Controller. The format of the synchronous Data Packet is shown in Figure 5.3. The definition for each of the fields in the data packets is explained below.

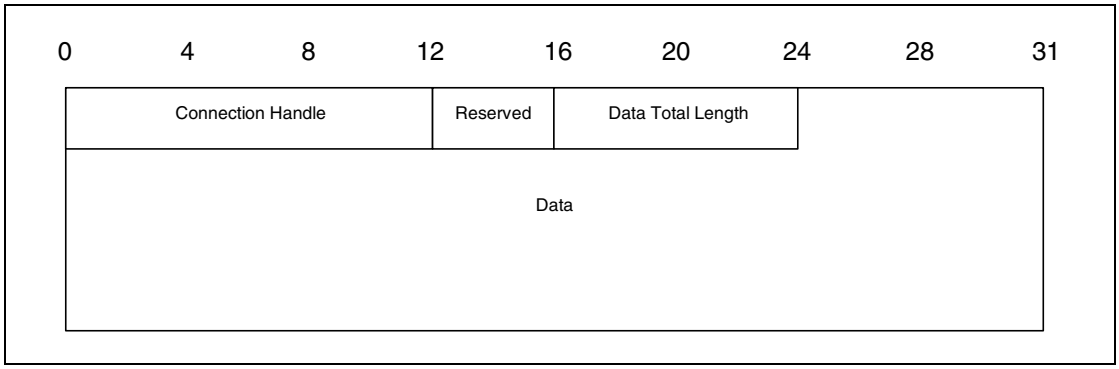

Figure 5.3: HCI Synchronous Data Packet

Connection_Handle: *Size: 12 Bits*

Value	Parameter Description
0xXXX	Connection handle to be used to for transmitting a synchronous data packet or segment. Range: 0x0000-0x0EFF (0x0F00- 0x0FFF Reserved for future use)

The Reserved Bits consist of four bits which are located from bit 4 to bit 7 in the second octet of the HCI Synchronous Data packet.

Reserved: *Size: 4 Bits*

Value	Parameter Description
XXXX	Reserved for future use.

Data_Total_Length: *Size: 1 Octet*

Value	Parameter Description
0xXX	Length of synchronous data measured in octets

5.4.4 HCI Event Packet

The HCI Event Packet is used by the Controller to notify the Host when events occur. The Host must be able to accept HCI Event Packets with up to 255 octets of data excluding the HCI Event Packet header. The format of the HCI Event Packet is shown in Figure 5.4, and the definition of each field is explained below.

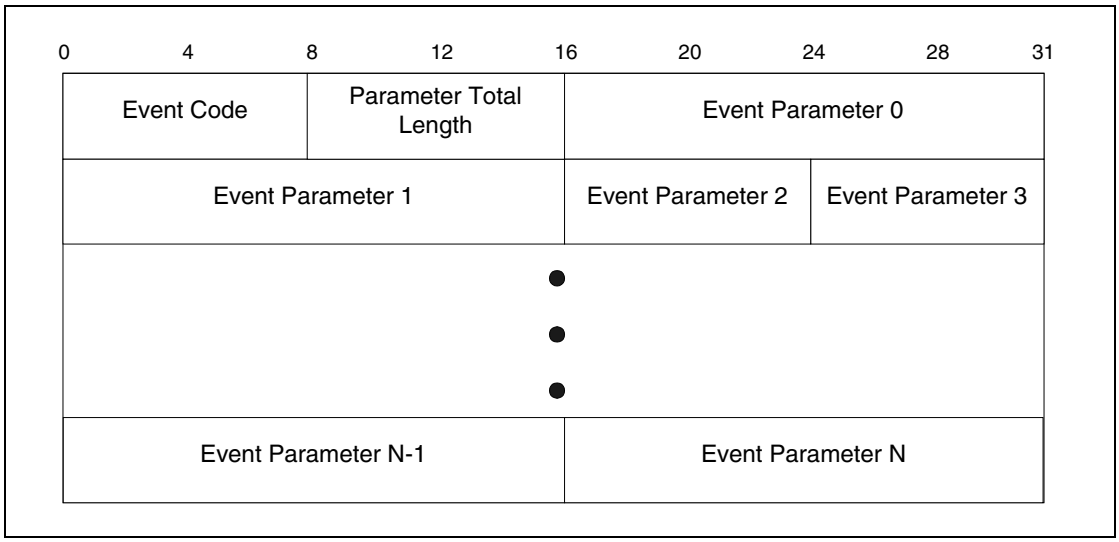

Figure 5.4: HCI Event Packet

Event_Code: *Size: 1 Octet*

Value	Parameter Description
0xXX	Each event is assigned a 1-Octet event code used to uniquely identify different types of events. Range: 0x00-0xFF (The event code 0xFF is reserved for the event code used for vendor-specific debug events. In addition, the event code 0xFE is also reserved for Bluetooth Logo Testing)

Parameter_Total_Length: *Size: 1 Octet*

Value	Parameter Description
0xXX	Length of all of the parameters contained in this packet, measured in octets

Event_Parameter 0 - N: *Size: Parameter Total Length*

Value	Parameter Description
0xXX	Each event has a specific number of parameters associated with it. These parameters and the size of each of the parameters are defined for each event. Each parameter is an integer number of octets in size.

6 HCI CONFIGURATION PARAMETERS

6.1 SCAN ENABLE

The Scan_Enable parameter controls whether or not the Bluetooth device will periodically scan for page attempts and/or inquiry requests from other Bluetooth devices. If Page_Scan is enabled, then the device will enter page scan mode based on the value of the Page_Scan_Interval and Page_Scan_Window parameters. If Inquiry_Scan is enabled, then the device will enter Inquiry Scan mode based on the value of the Inquiry_Scan_Interval and Inquiry_Scan_ Window parameters.

Value	Parameter Description
0x00	No Scans enabled.
0x01	Inquiry Scan enabled. Page Scan always disabled.
0x02	Inquiry Scan disabled. Page Scan enabled.
0x03	Inquiry Scan enabled. Page Scan enabled.
0x04-0xFF	Reserved

6.2 INQUIRY SCAN INTERVAL

The Inquiry_Scan_Interval configuration parameter defines the amount of time between consecutive inquiry scans. This is defined as the time interval from when the Controller started its last inquiry scan until it begins the next inquiry scan.

Value	Parameter Description
N = 0xXXXX	Size: 2 Octets Range: 0x0012 to 0x1000; only even values are valid Default: 0x1000 Mandatory Range: 0x0012 to 0x1000 Time = N * 0.625 msec Time Range: 11.25 to 2560 msec Time Default: 2.56 sec

6.3 INQUIRY SCAN WINDOW

The Inquiry_Scan_Window configuration parameter defines the amount of time for the duration of the inquiry scan. The Inquiry_Scan_Window can only be less than or equal to the Inquiry_Scan_Interval.

Value	Parameter Description
N = 0xXXXX	Size: 2 Octets Range: 0x0011 to 0x1000 Default: 0x0012 Mandatory Range: 0x0011 to Inquiry Scan Interval Time = N * 0.625 msec Time Range: 10.625 msec to 2560 msec Time Default: 11.25 msec

6.4 INQUIRY SCAN TYPE

The Inquiry_Scan_Type configuration parameter indicates whether inquiry scanning will be done using non-interlaced scan or interlaced scan. Currently, one mandatory inquiry scan type and one optional inquiry scan type are defined. For details, see the Baseband Specification, “Inquiry scan substate” on page 144 [Part B].

Value	Parameter Description
0x00	Mandatory: Standard Scan (default)
0x01	Optional: Interlaced Scan
0x02-0xFF	Reserved

6.5 INQUIRY MODE

The Inquiry_Mode configuration parameter indicates whether inquiry returns Inquiry Result events in the standard format or with RSSI.

Value	Parameter Description
0x00	Standard Inquiry Result event format
0x01	Inquiry Result format with RSSI
0x02-0xFF	Reserved

6.6 PAGE TIMEOUT

The Page_Timeout configuration parameter defines the maximum time the local Link Manager will wait for a baseband page response from the remote device at a locally initiated connection attempt. If this time expires and the remote device has not responded to the page at baseband level, the connection attempt will be considered to have failed.

Value	Parameter Description
N = 0xXXXX	Size: 2 Octets Range: 0x0001 to 0xFFFF Default: 0x2000 Mandatory Range: 0x0016 to 0xFFFF Time = N * 0.625 msec Time Range: 0.625 msec to 40.9 sec Time Default: 5.12 sec

6.7 CONNECTION ACCEPT TIMEOUT

The Connection_Accept_Timeout configuration parameter allows the Bluetooth hardware to automatically deny a connection request after a specified time period has occurred and the new connection is not accepted. The parameter defines the time duration from when the Controller sends a Connection Request event until the Controller will automatically reject an incoming connection.

Value	Parameter Description
N = 0xXXXX	Size: 2 Octets Range: 0x0001 to 0xB540 Default: 0x1F40 Mandatory Range: 0x00A0 to 0xB540 Time = N * 0.625 msec Time Range: 0.625 msec to 29 sec Time Default: 5 sec

6.8 PAGE SCAN INTERVAL

The Page_Scan_Interval configuration parameter defines the amount of time between consecutive page scans. This time interval is defined from when the Controller started its last page scan until it begins the next page scan.

Value	Parameter Description
N = 0xXXXX	Size: 2 Octets Range: 0x0012 to 0x1000; only even values are valid Default: 0x0800 Mandatory Range: 0x0012 to 0x1000 Time = N * 0.625 msec Time Range: 11.25 msec to 2560 msec Time Default: 1.28 sec

6.9 PAGE SCAN WINDOW

The Page_Scan_Window configuration parameter defines the amount of time for the duration of the page scan. The Page_Scan_Window can only be less than or equal to the Page_Scan_Interval.

Value	Parameter Description
N = 0xXXXX	Size: 2 Octets Range: 0x0011 to 0x1000 Default: 0x0012 Mandatory Range: 0x0011 to Page Scan Interval Time = N * 0.625 msec Time Range: 10.625 msec to Page Scan Interval Time Default: 11.25 msec

6.10 PAGE SCAN PERIOD MODE

Every time an inquiry response message is sent, the Bluetooth device will start a timer (T_mandatory_pscan), the value of which is dependent on the Page_Scan_Period_Mode. As long as this timer has not expired, the Bluetooth device will use the mandatory page scan mode for all following page scans. Note: the timer T_mandatory_pscan will be reset at each new inquiry response. For details see the “Baseband Specification” on page 45 [Part B]. (Keyword: SP-Mode, FHS-Packet, T_mandatory_pscan, Inquiry-Response).

Value	Parameter Description
0x00	P0
0x01	P1
0x02	P2
0x03-0xFF	Reserved.

6.11 PAGE SCAN TYPE

The Page_Scan_Type parameter indicates whether inquiry scanning will be done using non-interlaced scan or interlaced scan. For details, see the Baseband Specification, "Page scan substate" on page 134 [Part B].

Value	Parameter Description
0x00	Mandatory: Standard Scan (default)
0x01	Optional: Interlaced Scan
0x02-0xFF	Reserved

6.12 VOICE SETTING

The Voice_Setting parameter controls all the various settings for voice connections. The input settings apply to all voice connections, and **cannot** be set for individual voice connections. The Voice_Setting parameter controls the configuration for voice connections: Input Coding, Air coding format, input data format, Input sample size, and linear PCM parameter.The air coding format bits in the Voice_Setting command parameter specify which air coding format the local device requests. The air coding format bits do not specify which air coding format(s) the local device accepts when a remote device requests an air coding format. This is determined by the hardware capabilities of the local device.

Value	Parameter Description
00XXXXXXXX	Input Coding: Linear
01XXXXXXXX	Input Coding: μ-law Input Coding
10XXXXXXXX	Input Coding: A-law Input Coding
11XXXXXXXX	Reserved for Future Use
XX00XXXXXX	Input Data Format: 1's complement
XX01XXXXXX	Input Data Format: 2's complement
XX10XXXXXX	Input Data Format: Sign-Magnitude
XX11XXXXXX	Input Data Format: Unsigned
XXXX0XXXXX	Input Sample Size: 8-bit (only for linear PCM)
XXXX1XXXXX	Input Sample Size: 16-bit (only for linear PCM)
XXXXXnnnXX	Linear_PCM_Bit_Pos: # bit positions that MSB of sample is away from starting at MSB (only for Liner PCM).
XXXXXXXX00	Air Coding Format: CVSD
XXXXXXXX01	Air Coding Format: μ-law
XXXXXXXX10	Air Coding Format: A-law
XXXXXXXX11	Air Coding Format: Transparent Data

6.13 PIN TYPE

The PIN Type configuration parameter determines whether the Link Manager assumes that the Host supports variable PIN codes or a fixed PIN code. The host controller uses the PIN-type information during pairing.

Value	Parameter Description
0x00	Variable PIN.
0x01	Fixed PIN.

6.14 LINK KEY

The Controller can store a limited number of link keys for other Bluetooth devices. Link keys are shared between two Bluetooth devices, and are used for all security transactions between the two devices. A Host device may have additional storage capabilities, which can be used to save additional link keys to be reloaded to the Bluetooth Controller when needed. A Link Key is associated with a BD_ADDR.

Value	Parameter Description
0xXXXXXXXXXX XXXXXXXXXXX XXXXXXXXXXX	Link Key for an associated BD_ADDR.

6.15 AUTHENTICATION ENABLE

The Authentication_Enable parameter controls if the local device requires to authenticate the remote device at connection setup (between the Create_Connection command or acceptance of an incoming ACL connection and the corresponding Connection Complete event). At connection setup, only the device(s) with the Authentication_Enable parameter enabled will try to authenticate the other device.

Note: Changing this parameter does not affect existing connections.

Value	Parameter Description
0x00	Authentication not required.
0x01	Authentication required for all connections.
0x02-0xFF	Reserved

6.16 ENCRYPTION MODE

The Encryption_Mode parameter controls if the local device requires encryption to the remote device at connection setup (between the Create_Connection command or acceptance of an incoming ACL connection and the corresponding Connection Complete event). At connection setup, only devices with the Authentication_Enabled configuration parameter set to required and the Encryption_Mode configuration parameter set to required will try to encrypt the physical link to the other device.

Note: Changing this parameter does not affect existing connections.

A temporary link key is used when both broadcast and point-to-point traffic are encrypted.

The Host must not specify the Encryption_Mode parameter with more encryption capability than its local device currently supports, although the parameter is used to request the encryption capability to the remote device. Note that the Host must not request the command with the Encryption_Mode parameter set to 0x01, when the local device does not support encryption.

Note: for encryption to be used, both devices must support and enable encryption.

Value	Parameter Description
0x00	Encryption not required.
0x01	Encryption required for all connections.
0x02-0xFF	Reserved.

Note: in the Connection Complete event the Encryption_Mode parameter will show whether encryption was successfully turned on. The remote device may not support encryption or may have set Encryption_Mode to 0x01 when the local device has not, so the encryption mode returned in the Connection Complete event may not equal the encryption mode set in the HCI_Write_Encryption_Mode Command.

6.17 FAILED CONTACT COUNTER

The Failed_Contact_Counter records the number of consecutive incidents in which either the slave or master didn't respond after the flush timeout had expired, and the L2CAP packet that was currently being transmitted was automatically 'flushed'. When this occurs, the Failed_Contact_Counter is incremented by 1. The Failed_Contact_
Counter for a connection is reset to zero on the following conditions:

1. When a new connection is established
2. When the Failed_Contact_Counter is > zero and an L2CAP packet is acknowledged for that connection
3. When the Reset_Failed_Contact_Counter command has been issued

Value	Parameter Description
0xXXXX	Number of consecutive failed contacts for a connection corresponding to the connection handle.

6.18 HOLD MODE ACTIVITY

The Hold_Mode_Activity value is used to determine what activities should be suspended when the device is in hold mode. After the hold period has expired, the device will return to the previous mode of operation. Multiple hold mode activities may be specified for the Hold_Mode_Activity parameter by performing a bitwise OR operation of the different activity types. If no activities are suspended, then all of the current Periodic Inquiry, Inquiry Scan, and Page Scan settings remain valid during the Hold Mode. If the Hold_Mode_Activity parameter is set to Suspend Page Scan, Suspend Inquiry Scan, and Suspend Periodic Inquiries, then the device can enter a low-power state during the Hold Mode period, and all activities are suspended. Suspending multiple activities can be specified for the Hold_Mode_Activity parameter by performing a bitwise OR operation of the different activity types.The Hold Mode Activity is only valid if all connections are in Hold Mode.

Value	Parameter Description
0x00	Maintain current Power State.
0x01	Suspend Page Scan.
0x02	Suspend Inquiry Scan.
0x04	Suspend Periodic Inquiries.
0x08-0xFF	Reserved for Future Use.

6.19 LINK POLICY SETTINGS

The Link_Policy_Settings parameter determines the behavior of the local Link Manager when it receives a request from a remote device or it determines itself to change the master-slave role or to enter park state, hold, or sniff mode. The local Link Manager will automatically accept or reject such a request from the remote device, and may even autonomously request itself, depending on the value of the Link_Policy_Settings parameter for the corresponding Connection_Handle. When the value of the Link_Policy_Settings parameter is changed for a certain Connection_Handle, the new value will only be used for requests from a remote device or from the local Link Manager itself made after this command has been completed. By enabling each mode individually, the Host can choose any combination needed to support various modes of operation. Multiple LM policies may be specified for the Link_Policy_Settings parameter by performing a bitwise OR operation of the different activity types.

Note: The local device may be forced into hold mode (regardless of whether the local device is master or slave) by the remote device regardless of the value of the Link_Policy_Settings parameter. The forcing of hold mode can however only be done once the connection has already been placed into hold mode through an LMP request (the Link_Policy_Settings determine if requests from a remote device should be accepted or rejected). The forcing of hold mode can after that be done as long as the connection lasts regardless of the setting for hold mode in the Link_Policy_Settings parameter.

Note that the previous description implies that if the implementation in the remote device is a "polite" implementation that does not force another device into hold mode via LMP PDUs, then the Link_Policy_Settings will never be overruled.

Value	Parameter Description
0x0000	Disable All LM Modes Default
0x0001	Enable Role switch.
0x0002	Enable Hold Mode.
0x0004	Enable Sniff Mode.
0x0008	Enable Park State.
0x0010 – 0x8000	Reserved for Future Use.

6.20 FLUSH TIMEOUT

The Flush_Timeout configuration parameter is used for ACL connections only. The Flush Timeout is defined in the Baseband specification Section 7.6.3, “Flushing payloads,” on page 130. This parameter allows ACL packets to be automatically flushed without the Host device issuing a Flush command. This provides support for isochronous data, such as audio. When the L2CAP packet that is currently being transmitted is automatically ‘flushed’, the Failed Contact Counter is incremented by one.

Value	Parameter Description
0	Timeout = ∞; No Automatic Flush
N = 0xXXXX	Size: 2 Octets Range: 0x0001 to 0x07FF Mandatory Range: 0x0002 to 0x07FF Time = N * 0.625 msec Time Range: 0.625 msec to 1279.375 msec

6.21 NUM BROADCAST RETRANSMISSIONS

Broadcast packets are not acknowledged and are unreliable. The Number of Broadcast Retransmissions parameter, N, is used to increase the reliability of a broadcast message by retransmitting the broadcast message multiple times. This parameter defines the number of times the device will retransmit a broadcast data packet. This sets the value N_{BC} in the baseband to one greater than the Num Broadcast Retransmissions value. (See Baseband Specification, Section 7.6.5, on page 130) This parameter should be adjusted as the link quality measurement changes.

Value	Parameter Description
N = 0xXX	N_{BC} = N + 1 Range 0x00-0xFE

6.22 LINK SUPERVISION TIMEOUT

The Link_Supervision_Timeout parameter is used by the master or slave Bluetooth device to monitor link loss. If, for any reason, no Baseband packets are received from that Connection Handle for a duration longer than the Link_Supervision_Timeout, the connection is disconnected. The same timeout value is used for both synchronous and ACL connections for the device specified by the Connection Handle.

Note: Setting the Link_Supervision_Timeout to No Link_Supervision_Timeout (0x0000) will disable the Link_Supervision_Timeout check for the specified Connection Handle. This makes it unnecessary for the master of the piconet to unpark and then park each Bluetooth Device every ~40 seconds. By using the No Link_Supervision_Timeout setting, the scalability of the Park state is not limited.

Value	Parameter Description
0x0000	No Link_Supervision_Timeout.
N = 0xXXXX	Size: 2 Octets Range: 0x0001 to 0xFFFF Default: 0x7D00 Mandatory Range: 0x0190 to 0xFFFF Time = N * 0.625 msec Time Range: 0.625 msec to 40.9 sec Time Default: 20 sec

6.23 SYNCHRONOUS FLOW CONTROL ENABLE

The Synchronous Flow Control Enable confirguration parameter allows the Host to decide if the Controller will send Number Of Completed Packets events for synchronous Connection Handles. This setting allows the Host to enable and disable synchronous flow control.

Value	Parameter Description
0x00	Synchronous Flow Control is disabled. No Number of Completed Packets events will be sent from the Controller for synchronous Connection Handles.
0x01	Synchronous Flow Control is enabled. Number of Completed Packets events will be sent from the Controller for synchronous Connection Handles.

6.24 LOCAL NAME

The user-friendly Local Name provides the user the ability to distinguish one Bluetooth device from another. The Local Name configuration parameter is a UTF-8 encoded string with up to 248 octets in length. The Local Name configuration parameter will be null terminated (0x00) if the UTF-8 encoded string is less than 248 octets.

Note: the Local Name configuration parameter is a string parameter. Endianess does therefore not apply to the Local Name configuration parameter. The first octet of the name is received first.

Value	Parameter Description
	A UTF-8 encoded User Friendly Descriptive Name for the device. If the name contained in the parameter is shorter than 248 octets, the end of the name is indicated by a NULL octet (0x00), and the following octets (to fill up 248 octets, which is the length of the parameter) do not have valid values.

6.25 CLASS OF DEVICE

The Class_of_Device parameter is used to indicate the capabilities of the local device to other devices.

Value	Parameter Description
0xXXXXXX	Class of Device for the device.

6.26 SUPPORTED COMMANDS

The Supported Commands configuration parameter lists which HCI commands the local controller supports. It is implied that if a command is listed as supported, the feature underlying that command is also supported.

The Supported Commands is a 64 octet bit field. If a bit is set to 1, then this command is supported.

Octet	Bit	Command Supported
0	0	Inquiry
	1	Inquiry Cancel
	2	Periodic Inquiry Mode
	3	Exit Periodic Inquiry Mode
	4	Create Connection
	5	Disconnect
	6	Add SCO Connection
	7	Cancel Create Connection
1	0	Accept Connection Request
	1	Reject Connection Request
	2	Link Key Request Reply
	3	Link Key Request Negative Reply
	4	PIN Code Request Reply
	5	PIN Code Request Negative Reply
	6	Change Connection Packet Type
	7	Authentication Request
2	0	Set Connection Encryption
	1	Change Connection Link Key
	2	Master Link Key
	3	Remote Name Request
	4	Cancel Remote Name Request
	5	Read Remote Supported Features
	6	Read Remote Extended Features
	7	Read Remote Version Information
3	0	Read Clock Offset
	1	Read LMP Handle
	2	Reserved
	3	Reserved
	4	Reserved
	5	Reserved
	6	Reserved
	7	Reserved

Octet	Bit	Command Supported
4	0	Reserved
	1	Hold Mode
	2	Sniff Mode
	3	Exit Sniff Mode
	4	Park State
	5	Exit Park State
	6	QoS Setup
	7	Role Discovery
5	0	Switch Role
	1	Read Link Policy Settings
	2	Write Link Policy Settings
	3	Read Default Link Policy Settings
	4	Write Default Link Policy Settings
	5	Flow Specification
	6	Set Event Mark
	7	Reset
6	0	Set Event Filter
	1	Flush
	2	Read PIN Type
	3	Write PIN Type
	4	Create New Unit Key
	5	Read Stored Link Key
	6	Write Stored Link Key
	7	Delete Stored Link Key
7	0	Write Local Name
	1	Read Local Name
	2	Read Connection Accept Timeout
	3	Write Connection Accept Timeout
	4	Read Page Timeout
	5	Write Page Timeout
	6	Read Scan Enable
	7	Write Scan Enable
8	0	Read Page Scan Activity
	1	Write Page Scan Activity
	2	Read Inquiry Scan Activity
	3	Write Inquiry Scan Activity
	4	Read Authentication Enable
	5	Write Authentication Enable
	6	Read Encryption Mode
	7	Write Encryption Mode

Octet	Bit	Command Supported
9	0	Read Class Of Device
	1	Write Class Of Device
	2	Read Voice Setting
	3	Write Voice Setting
	4	Read Automatic Flush Timeout
	5	Write Automatic Flush Timeout
	6	Read Num Broadcast Retransmissions
	7	Write Num Broadcast Retransmissions
10	0	Read Hold Mode Activity
	1	Write Hold Mode Activity
	2	Read Transmit Power Level
	3	Read Synchronous Flow Control Enable
	4	Write Synchronous Flow Control Enable
	5	Set Host Controller To Host Flow Control
	6	Host Buffer Size
	7	Host Number Of Completed Packets
11	0	Read Link Supervision Timeout
	1	Write Link Supervision Timeout
	2	Read Number of Supported IAC
	3	Read Current IAC LAP
	4	Write Current IAC LAP
	5	Read Page Scan Period Mode
	6	Write Page Scan Period Mode
	7	Read Page Scan Mode
12	0	Write Page Scan Mode
	1	Set AFH Channel Classification
	2	reserved
	3	reserved
	4	Read Inquiry Scan Type
	5	Write Inquiry Scan Type
	6	Read Inquiry Mode
	7	Write Inquiry Mode
13	0	Read Page Scan Type
	1	Write Page Scan Type
	2	Read AFH Channel Assessment Mode
	3	Write AFH Channel Assessment Mode
	4	Reserved
	5	Reserved
	6	Reserved
	7	Reserved

Octet	Bit	Command Supported
14	0	Reserved
	1	Reserved
	2	Reserved
	3	Read Local Version Information
	4	Reserved
	5	Read Local Supported Features
	6	Read Local Extended Features
	7	Read Buffer Size
15	0	Read Country Code
	1	Read BD ADDR
	2	Read Failed Contact Count
	3	Reset Failed Contact Count
	4	Get Link Quality
	5	Read RSSI
	6	Read AFH Channel Map
	7	Read BD Clock
16	0	Read Loopback Mode
	1	Write Loopback Mode
	2	Enable Device Under Test Mode
	3	Setup Synchronous Connection
	4	Accept Synchronous Connection
	5	Reject Synchronous Connection[
	6	Reserved
	7	Reserved

7 HCI COMMANDS AND EVENTS

7.1 LINK CONTROL COMMANDS

The Link Control commands allow the Controller to control connections to other Bluetooth devices. When the Link Control commands are used, the Link Manager (LM) controls how the Bluetooth piconets and scatternets are established and maintained. These commands instruct the LM to create and modify link layer connections with Bluetooth remote devices, perform Inquiries of other Bluetooth devices in range, and other LMP commands. For the Link Control commands, the OGF is defined as 0x01.

7.1.1 Inquiry Command

Command	OCF	Command Parameters	Return Parameters
HCI_Inquiry	0x0001	LAP, Inquiry_Length, Num_Responses	

Description:

This command will cause the Bluetooth device to enter Inquiry Mode. Inquiry Mode is used to discover other nearby Bluetooth devices. The LAP input parameter contains the LAP from which the inquiry access code shall be derived when the inquiry procedure is made. The Inquiry_Length parameter specifies the total duration of the Inquiry Mode and, when this time expires, Inquiry will be halted. The Num_Responses parameter specifies the number of responses that can be received before the Inquiry is halted. A Command Status event is sent from the Controller to the Host when the Inquiry command has been started by the Bluetooth device. When the Inquiry process is completed, the Controller will send an Inquiry Complete event to the Host indicating that the Inquiry has finished. The event parameters of Inquiry Complete event will have a summary of the result from the Inquiry process, which reports the number of nearby Bluetooth devices that responded. When a Bluetooth device responds to the Inquiry message, an Inquiry Result event will occur to notify the Host of the discovery.

A device which responds during an inquiry or inquiry period should always be reported to the Host in an Inquiry Result event if the device has not been reported earlier during the current inquiry or inquiry period and the device has not been filtered out using the command Set_Event_Filter. If the device has been reported earlier during the current inquiry or inquiry period, it may or may not be reported depending on the implementation (depending on if earlier results have been saved in the Controller and in that case how many responses that have been saved). It is recommended that the Controller tries to report a particular device only once during an inquiry or inquiry period.

Command Parameters:

LAP: *Size: 3 Octets*

Value	Parameter Description
0x9E8B00– 0X9E8B3F	This is the LAP from which the inquiry access code should be derived when the inquiry procedure is made; see “Bluetooth Assigned Numbers” (https://www.bluetooth.org/foundry/assignnumb/document/assigned_numbers).

Inquiry_Length: *Size: 1 Octet*

Value	Parameter Description
N = 0xXX	Maximum amount of time specified before the Inquiry is halted. Size: 1 octet Range: 0x01 – 0x30 Time = N * 1.28 sec Range: 1.28 – 61.44 Sec

Num_Responses: *Size: 1 Octet*

Value	Parameter Description
0x00	Unlimited number of responses.
0xXX	Maximum number of responses from the Inquiry before the Inquiry is halted. Range: 0x01 – 0xFF

Return Parameters:

None.

Event(s) generated (unless masked away):

A Command Status event is sent from the Controller to the Host when the Controller has started the Inquiry process. An Inquiry Result event will be created for each Bluetooth device which responds to the Inquiry message. In addition, multiple Bluetooth devices which respond to the Inquire message may be combined into the same event. An Inquiry Complete event is generated when the Inquiry process has completed.
Note: no Command Complete event will be sent by the Controller to indicate that this command has been completed. Instead, the Inquiry Complete event will indicate that this command has been completed. No Inquiry Complete event will be generated for the canceled Inquiry process.

7.1.2 Inquiry Cancel Command

Command	OCF	Command Parameters	Return Parameters
HCI_Inquiry_Cancel	0x0002		Status

Description:

This command will cause the Bluetooth device to stop the current Inquiry if the Bluetooth device is in Inquiry Mode. This command allows the Host to interrupt the Bluetooth device and request the Bluetooth device to perform a different task. The command should only be issued after the Inquiry command has been issued, a Command Status event has been received for the Inquiry command, and before the Inquiry Complete event occurs.

Return Parameters:

Status: *Size: 1 Octet*

Value	Parameter Description
0x00	Inquiry_Cancel command succeeded.
0x01-0xFF	Inquiry_Cancel command failed. See “Error Codes” on page 291 [Part D] for list of Error Codes.

Event(s) generated (unless masked away):

When the Inquiry Cancel command has completed, a Command Complete event will be generated. No Inquiry Complete event will be generated for the canceled Inquiry process.

7.1.3 Periodic Inquiry Mode Command

Command	OCF	Command Parameters	Return Parameters
HCI_Periodic_ Inquiry_Mode	0x0003	Max_Period_Length, Min_Period_Length, LAP, Inquiry_Length, Num_Responses	Status

Description:

The Periodic_Inquiry_Mode command is used to configure the Bluetooth device to enter the Periodic Inquiry Mode that performs an automatic Inquiry. Max_Period_Length and Min_Period_Length define the time range between two consecutive inquiries, from the beginning of an inquiry until the start of the next inquiry. The Controller will use this range to determine a new random time between two consecutive inquiries for each Inquiry. The LAP input parameter contains the LAP from which the inquiry access code shall be derived when the inquiry procedure is made. The Inquiry_Length parameter specifies the total duration of the InquiryMode and, when time expires, Inquiry will be halted. The Num_Responses parameter specifies the number of responses that can be received before the Inquiry is halted. This command is completed when the Inquiry process has been started by the Bluetooth device, and a Command Complete event is sent from the Controller to the Host. When each of the periodic Inquiry processes are completed, the Controller will send an Inquiry Complete event to the Host indicating that the latest periodic Inquiry process has finished. When a Bluetooth device responds to the Inquiry message an Inquiry Result event will occur to notify the Host of the discovery.
Note: Max_Period_Length > Min_Period_Length > Inquiry_Length

A device which responds during an inquiry or inquiry period should always be reported to the Host in an Inquiry Result event if the device has not been reported earlier during the current inquiry or inquiry period and the device has not been filtered out using the command Set_Event_Filter. If the device has been reported earlier during the current inquiry or inquiry period, it may or may not be reported depending on the implementation (depending on if earlier results have been saved in the Controller and in that case how many responses that have been saved). It is recommended that the Controller tries to report a particular device only once during an inquiry or inquiry period.

Command Parameters:

Max_Period_Length: *Size: 2 Octets*

Value	Parameter Description
N = 0xXXXX	Maximum amount of time specified between consecutive inquiries. Size: 2 octets Range: 0x03 – 0xFFFF Time = N * 1.28 sec Range: 3.84 – 83884.8 Sec 0.0 – 23.3 hours

Min_Period_Length: *Size: 2 Octets*

Value	**Parameter Description**
N = 0xXXXX	Minimum amount of time specified between consecutive inquiries. Size: 2 octets Range: 0x02 – 0xFFFE Time = N * 1.28 sec Range: 2.56 – 83883.52 Sec 0.0 – 23.3 hours

LAP: *Size: 3 Octets*

Value	**Parameter Description**
0x9E8B00– 0X9E8B3F	This is the LAP from which the inquiry access code should be derived when the inquiry procedure is made, see “Bluetooth Assigned Numbers” (https://www.bluetooth.org/foundry/assignnumb/document/assigned_numbers).

Inquiry_Length: *Size: 1 Octet*

Value	**Parameter Description**
N = 0xXX	Maximum amount of time specified before the Inquiry is halted. Size: 1 octet Range: 0x01 – 0x30 Time = N * 1.28 sec Range: 1.28 – 61.44 Sec

Num_Responses: *Size: 1 Octet*

Value	**Parameter Description**
0x00	Unlimited number of responses.
0xXX	Maximum number of responses from the Inquiry before the Inquiry is halted. Range: 0x01 – 0xFF

Return Parameters:

Status: *Size: 1 Octet*

Value	Parameter Description
0x00	Periodic Inquiry Mode command succeeded.
0x01-0xFF	Periodic Inquiry Mode command failed. See "Error Codes" on page 291 [Part D] for list of Error Codes.

Event(s) generated (unless masked away):

The Periodic Inquiry Mode begins when the Controller sends the Command Complete event for this command to the Host. An Inquiry Result event will be created for each Bluetooth device which responds to the Inquiry message. In addition, multiple Bluetooth devices which response to the Inquiry message may be combined into the same event. An Inquiry Complete event is generated when each of the periodic Inquiry processes has completed. No Inquiry Complete event will be generated for the canceled Inquiry process.

7.1.4 Exit Periodic Inquiry Mode Command

Command	OCF	Command Parameters	Return Parameters
HCI_Exit_Periodic_Inquiry_Mode	0x0004		Status

Description:

The Exit Periodic Inquiry Mode command is used to end the Periodic Inquiry mode when the local device is in Periodic Inquiry Mode. If the local device is currently in an Inquiry process, the Inquiry process will be stopped directly and the Controller will no longer perform periodic inquiries until the Periodic Inquiry Mode command is reissued.

Command Parameters:

None.

Return Parameters:

Status: *Size: 1 Octet*

Value	Parameter Description
0x00	Exit Periodic Inquiry Mode command succeeded.
0x01-0xFF	Exit Periodic Inquiry Mode command failed. See "Error Codes" on page 291 [Part D] for list of Error Codes.

Event(s) generated (unless masked away):

A Command Complete event for this command will occur when the local device is no longer in Periodic Inquiry Mode. No Inquiry Complete event will be generated for the canceled Inquiry process.

7.1.5 Create Connection Command

Command	OCF	Command Parameters	Return Parameters
HCI_Create_Connection	0x0005	BD_ADDR, Packet_Type, Page_Scan_Repetition_Mode, Reserved, Clock_Offset, Allow_Role_Switch	

Description:

This command will cause the Link Manager to create a connection to the Bluetooth device with the BD_ADDR specified by the command parameters. This command causes the local Bluetooth device to begin the Page process to create a link level connection. The Link Manager will determine how the new ACL connection is established. This ACL connection is determined by the current state of the device, its piconet, and the state of the device to be connected. The Packet_Type command parameter specifies which packet types the Link Manager shall use for the ACL connection. When sending HCI ACL Data Packets the Link Manager shall only use the packet type(s) specified by the Packet_Type command parameter or the always-allowed DM1 packet type. Multiple packet types may be specified for the Packet Type parameter by performing a bit-wise OR operation of the different packet types. The Link Manager may choose which packet type to be used from the list of acceptable packet types. The Page_Scan_Repetition_Mode parameter specifies the page scan repetition mode supported by the remote device with the BD_ADDR. This is the information that was acquired during the inquiry process. The Clock_Offset parameter is the difference between its own clock and the clock of the remote device with BD_ADDR. Only bits 2 through 16 of the difference are used, and they are mapped to this parameter as bits 0 through 14 respectively. A Clock_Offset_Valid_Flag, located in bit 15 of the Clock_Offset parameter, is used to indicate if the Clock Offset is valid or not. A Connection handle for this connection is returned in the Connection Complete event (see below). The Allow_Role_Switch parameter specifies if the local device accepts or rejects the request of a master-slave role switch when the remote device requests it at the connection setup (in the Role parameter of the Accept_Connection_Request command) (before the local Controller returns a Connection Complete event). For a definition of the different packet types see the “Baseband Specification” on page 45 [Part B].

Note: The Host should enable as many packet types as possible for the Link Manager to perform efficiently. However, the Host must not enable packet types that the local device does not support.

Command Parameters:

BD_ADDR: *Size: 6 Octets*

Value	Parameter Description
0xXXXXXXXXXXXX	BD_ADDR of the Device to be connected.

Packet_Type: *Size: 2 Octets*

Value	Parameter Description
0x0001	Reserved for future use.
0x0002	Reserved for future use.
0x0004	Reserved for future use.
0x0008[1]	DM1
0x0010	DH1
0x0020	Reserved for future use.
0x0040	Reserved for future use.
0x0080	Reserved for future use.
0x0100	Reserved for future use.
0x0200	Reserved for future use.
0x0400	DM3
0x0800	DH3
0x1000	Reserved for future use.
0x2000	Reserved for future use.
0x4000	DM5
0x8000	DH5

1. this bit will be interpreted as set to 1 by link Controllers based on Bluetooth v1.2 or newer.

Page_Scan_Repetition_Mode: *Size: 1 Octet*

Value	Parameter Description
0x00	R0
0x01	R1
0x02	R2
0x03 – 0xFF	Reserved.

Reserved: *Size: 1 Octet*

Value	Parameter Description
0x00	Reserved, must be set to 0x00. See "Page Scan Mode" on page 586.

Clock_Offset: *Size: 2 Octets*

Bit format	Parameter Description
Bit 14-0	Bit 16-2 of CLKslave-CLKmaster.
Bit 15	Clock_Offset_Valid_Flag Invalid Clock Offfset = 0 Valid Clock Offset = 1

Allow_Role_Switch: *Size: 1 Octet*

Value	Parameter Description
0x00	The local device will be a master, and will not accept a role switch requested by the remote device at the connection setup.
0x01	The local device may be a master, or may become a slave after accepting a role switch requested by the remote device at the connection setup.
0x02-0xFF	Reserved for future use.

Return Parameters:

None.

Event(s) generated (unless masked away):

When the Controller receives the Create Connection command, the Controller sends the Command Status event to the Host. In addition, when the LM determines the connection is established, the Controller, on both Bluetooth devices that form the connection, will send a Connection Complete event to each Host. The Connection Complete event contains the Connection Handle if this command is successful.
Note: no Command Complete event will be sent by the Controller to indicate that this command has been completed. Instead, the Connection Complete event will indicate that this command has been completed.

7.1.6 Disconnect Command

Command	OCF	Command Parameters	Return Parameters
HCI_Disconnect	0x0006	Connection_Handle, Reason	

Description:

The Disconnection command is used to terminate an existing connection. The Connection_Handle command parameter indicates which connection is to be disconnected. The Reason command parameter indicates the reason for ending the connection. The remote Bluetooth device will receive the Reason command parameter in the Disconnection Complete event. All synchronous connections on a physical link should be disconnected before the ACL connection on the same physical connection is disconnected.

Command Parameters:

Connection_Handle: *Size: 2 Octets (12 Bits meaningful)*

Value	Parameter Description
0xXXXX	Connection Handle for the connection being disconnected. Range: 0x0000-0x0EFF (0x0F00 - 0x0FFF Reserved for future use)

Reason: *Size: 1 Octet*

Value	Parameter Description
0x05, 0x13-0x15, 0x1A, 0x29	Authentication Failure error code (0x05), Other End Terminated Connection error codes (0x13-0x15), Unsupported Remote Feature error code (0x1A) and Pairing with Unit Key Not Supported error code (0x29), see "Error Codes" on page 291 [Part D] for list of Error Codes.

Return Parameters:

None.

Event(s) generated (unless masked away):

When the Controller receives the Disconnect command, it sends the Command Status event to the Host. The Disconnection Complete event will occur at each Host when the termination of the connection has completed, and indicates that this command has been completed.
Note: No Command Complete event will be sent by the Controller to indicate that this command has been completed. Instead, the Disconnection Complete event will indicate that this command has been completed.

7.1.7 Create Connection Cancel Command

Command	OCF	Command Parameters	Return Parameters
HCI_Create_Connection _Cancel	0x0008	BD_ADDR	Status, BD_ADDR

Description:

This command is used to request cancellation of the ongoing connection creation process, which was started by a Create_Connection command of the local device.

Command Parameters:

BD_ADDR: *Size: 6 Octets*

Value	Parameter Description
0xXXXXXXXXXXXX	BD_ADDR of the Create Connection command request that was issued before and is subject of this cancellation request

Return Parameters:

Status: *Size: 1 Octet*

Value	Parameter Description
0x00	Create Connection Cancel command succeeded
0x01-0xff	Create Connection Cancel command failed. See "Error Codes" on page 291 [Part D] for list of error codes

BD_ADDR: *Size: 6 Octet*

Value	Parameter Description
0xXXXXXXXXXXXX	BD_ADDR of the Create Connection command that was issued before and is the subject of this cancellation request.

Event(s) generated (unless masked away):

When the Create Connection Cancel command has completed, a Command Complete event shall be generated.

If the connection is already established by the baseband, but the Controller has not yet sent the Connection Complete event, then the local device shall detach the link and return a Command Complete event with the status “Success”.

If the connection is already established, and the Connection Complete event has been sent, then the Controller shall return a Command Complete event with the error code *ACL Connection already exists* (0x0B).

If the Create Connection Cancel command is sent to the Controller without a preceding Create Connection command to the same device, the Controller shall return a Command Complete event with the error code *Unknown Connection Identifier* (0x02).

The error codes *Unspecified Error* (0x1F) and *Command Disallowed* (0x0C) may be used if the Controller does not support this command.

The Connection Complete event for the corresponding Create Connection Command shall always be sent. The Connection Complete event shall be sent after the Command Complete event for the Create Connection Cancel command. If the cancellation was successful, the Connection Complete event will be generated with the error code *Unknown Connection Identifier* (0x02).

7.1.8 Accept Connection Request Command

Command	OCF	Command Parameters	Return Parameters
HCI_Accept_Connection Request	0x0009	BD_ADDR, Role	

Description:

The Accept_Connection_Request command is used to accept a new incoming connection request. The Accept_Connection_Request command shall only be issued after a Connection Request event has occurred. The Connection Request event will return the BD_ADDR of the device which is requesting the connection. This command will cause the Link Manager to create a connection to the Bluetooth device, with the BD_ADDR specified by the command parameters. The Link Manager will determine how the new connection will be established. This will be determined by the current state of the device, its piconet, and the state of the device to be connected. The Role command parameter allows the Host to specify if the Link Manager shall request a role switch and become the Master for this connection. This is a preference and not a requirement. If the Role Switch fails then the connection will still be accepted, and the Role Discovery Command will reflect the current role.
Note: The Link Manager may terminate the connection if it would be low on resources if the role switch fails. The decision to accept a connection must be completed before the connection accept timeout expires on the local Bluetooth Module.
Note: when accepting synchronous connection request, the Role parameter is not used and will be ignored by the Controller.

Command Parameters:

BD_ADDR: *Size: 6 Octets*

Value	Parameter Description
0xXXXXXXXXXXXX	BD_ADDR of the Device to be connected

Role: *Size: 1 Octet*

Value	Parameter Description
0x00	Become the Master for this connection. The LM will perform the role switch.
0x01	Remain the Slave for this connection. The LM will **NOT** perform the role switch.

Return Parameters:

None.

Event(s) generated (unless masked away):

The Accept_Connection_Request command will cause the Command Status event to be sent from the Controller when the Controller begins setting up the connection. In addition, when the Link Manager determines the connection is established,the local Controller will send a Connection Complete event to its Host, and the remote Controller will send a Connection Complete event or a Synchronous Connection Complete event to the Host. The Connection Complete event contains the Connection Handle if this command is successful. Note: no Command Complete event will be sent by the Controller to indicate that this command has been completed. Instead, the Connection Complete event will indicate that this command has been completed.

7.1.9 Reject Connection Request Command

Command	OCF	Command Parameters	Return Parameters
HCI_Reject_Connection _Request	0x000A	BD_ADDR, Reason	

Description:

The Reject_Connection_Request command is used to decline a new incoming connection request. The Reject_Connection_Request command shall only be called after a Connection Request event has occurred. The Connection Request event will return the BD_ADDR of the device that is requesting the connection. The Reason command parameter will be returned to the connecting device in the Status parameter of the Connection Complete event returned to the Host of the connection device, to indicate why the connection was declined.

Command Parameters:

BD_ADDR: *Size: 6 Octets*

Value	Parameter Description
0xXXXXXXXXXXXX	BD_ADDR of the Device to reject the connection from.

Reason: *Size: 1 Octet*

Value	Parameter Description
0x0D-0x0F	Host Reject Error Code. See "Error Codes" on page 291 [Part D] for list of Error Codes and descriptions.

Return Parameters:

None.

Event(s) generated (unless masked away):

When the Controller receives the Reject_Connection_Request command, the Controller sends the Command Status event to the Host. Then, the local Controller will send a Connection Complete event to its host, and the remote Controller will send a Connection Complete event or a Synchronous Connection Complete event to the host. The Status parameter of the Connection Complete event, which is sent to the Host of the device attempting to make the connection, will contain the Reason command parameter from this command.
Note: no Command Complete event will be sent by the Controller to indicate that this command has been completed. Instead, the Connection Complete event will indicate that this command has been completed.

7.1.10 Link Key Request Reply Command

Command	OCF	Command Parameters	Return Parameters
HCI_Link_Key_Request_Reply	0x000B	BD_ADDR, Link_Key	Status, BD_ADDR

Description:

The Link_Key_Request_Reply command is used to reply to a Link Key Request event from the Controller, and specifies the Link Key stored on the Host to be used as the link key for the connection with the other Bluetooth Device specified by BD_ADDR. The Link Key Request event will be generated when the Controller needs a Link Key for a connection.

When the Controller generates a Link Key Request event in order for the local Link Manager to respond to the request from the remote Link Manager (as a result of a Create_Connection or Authentication_Requested command from the remote Host), the local Host must respond with either a Link_Key_Request_Reply or Link_Key_Request_Negative_Reply command before the remote Link Manager detects LMP response timeout. (See "Link Manager Protocol" on page 189 [Part C].)

Command Parameters:

BD_ADDR: *Size: 6 Octets*

Value	Parameter Description
0xXXXXXXXXXXXX	BD_ADDR of the Device of which the Link Key is for.

Link_Key: *Size: 16 Octets*

Value	Parameter Description
0xXXXXXXXXXXXXXXXXXXXXXXXXXXXX	Link Key for the associated BD_ADDR.

Return Parameters:

Status: *Size: 1 Octet*

Value	Parameter Description
0x00	Link_Key_Request_Reply command succeeded.
0x01-0xFF	Link_Key_Request_Reply command failed. See "Error Codes" on page 291 [Part D] for error codes and description.

BD_ADDR: *Size: 6 Octets*

Value	Parameter Description
0xXXXXXXXXXXXX	BD_ADDR of the Device of which the Link Key request reply has completed.

Event(s) generated (unless masked away):

The Link_Key_Request_Reply command will cause a Command Complete event to be generated.

7.1.11 Link Key Request Negative Reply Command

Command	OCF	Command Parameters	Return Parameters
HCI_Link_Key_Request _Negative_Reply	0x000C	BD_ADDR	Status, BD_ADDR

Description:

The Link_Key_Request_Negative_Reply command is used to reply to a Link Key Request event from the Controller if the Host does not have a stored Link Key for the connection with the other Bluetooth Device specified by BD_ADDR. The Link Key Request event will be generated when the Controller needs a Link Key for a connection.

When the Controller generates a Link Key Request event in order for the local Link Manager to respond to the request from the remote Link Manager (as a result of a Create_Connection or Authentication_Requested command from the remote Host), the local Host must respond with either a Link_Key_Request_Reply or Link_Key_Request_Negative_Reply command before the remote Link Manager detects LMP response timeout. (See "Link Manager Protocol" on page 189 [Part C].)

Command Parameters:

BD_ADDR: *Size: 6 Octets*

Value	Parameter Description
0xXXXXXXXXXXXX	BD_ADDR of the Device which the Link Key is for.

Return Parameters:

Status: *Size: 1 Octet*

Value	Parameter Description
0x00	Link_Key_Request_Negative_Reply command succeeded.
0x01-0xFF	Link_Key_Request_Negative_Reply command failed. See "Error Codes" on page 291 [Part D] for list of Error Codes.

BD_ADDR: *Size: 6 Octets*

Value	Parameter Description
0xXXXXXXXXXXXX	BD_ADDR of the Device which the Link Key request negative reply has completed.

Event(s) generated (unless masked away):

The Link_Key_Request_Negative_Reply command will cause a Command Complete event to be generated.

7.1.12 PIN Code Request Reply Command

Command	OCF	Command Parameters	Return Parameters
HCI_PIN_Code_Request_Reply	0x000D	BD_ADDR, PIN_Code_Length, PIN_Code	Status, BD_ADDR

Description:

The PIN_Code_Request_Reply command is used to reply to a PIN Code request event from the Controller, and specifies the PIN code to use for a connection. The PIN Code Request event will be generated when a connection with remote initiating device has requested pairing.

When the Controller generates a PIN Code Request event in order for the local Link Manager to respond to the request from the remote Link Manager (as a result of a Create_Connection or Authentication_Requested command from the remote Host), the local Host must respond with either a PIN_Code_Request_Reply or PIN_Code_Request_Negative_Reply command before the remote Link Manager detects LMP response timeout. (See "Link Manager Protocol" on page 189 [Part C].)

Command Parameters:

BD_ADDR: *Size: 6 Octets*

Value	Parameter Description
0xXXXXXXXXXXXX	BD_ADDR of the Device which the PIN code is for.

PIN_Code_Length: *Size: 1 Octet*

Value	Parameter Description
0xXX	The PIN code length specifics the length, in octets, of the PIN code to be used. Range: 0x01-0x10

PIN_Code: *Size: 16 Octets*

Value	Parameter Description
0xXXXXXXXXXXXXXXXXXXXXXXXXXXXX	PIN code for the device that is to be connected. The Host should insure that strong PIN Codes are used. PIN Codes can be up to a maximum of 128 bits. Note: the PIN_Code Parameter is a string parameter. Endianess does therefore not apply to the PIN_Code Parameter. The first octet of the PIN code should be transmitted first.

Return Parameters:

Status: *Size: 1 Octet*

Value	Parameter Description
0x00	PIN_Code_Request_Reply command succeeded.
0x01-0xFF	PIN_Code_Request_Reply command failed. See "Error Codes" on page 291 [Part D] for list of Error Codes.

BD_ADDR: *Size: 6 Octets*

Value	Parameter Description
0xXXXXXXXXXXXX	BD_ADDR of the Device which the PIN Code request reply has completed.

Event(s) generated (unless masked away):

The PIN_Code_Request_Reply command will cause a Command Complete event to be generated.

7.1.13 PIN Code Request Negative Reply Command

Command	OCF	Command Parameters	Return Parameters
HCI_PIN_Code_ Request_Negative Reply	0x000E	BD_ADDR	Status, BD_ADDR

Description:

The PIN_Code_Request_Negative_Reply command is used to reply to a PIN Code request event from the Controller when the Host cannot specify a PIN code to use for a connection. This command will cause the pair request with remote device to fail.

When the Controller generates a PIN Code Request event in order for the local Link Manager to respond to the request from the remote Link Manager (as a result of a Create_Connection or Authentication_Requested command from the remote Host), the local Host must respond with either a PIN_Code_Request_Reply or PIN_Code_Request_Negative_Reply command before the remote Link Manager detects LMP response timeout. (See "Link Manager Protocol" on page 189 [Part C].)

Command Parameters:

BD_ADDR: *Size: 6 Octets*

Value	Parameter Description
0xXXXXXXXXXXXX	BD_ADDR of the Device which this command is responding to.

Return Parameters:

Status: *Size: 1 Octet*

Value	Parameter Description
0x00	PIN_Code_Request_Negative_Reply command succeeded.
0x01-0xFF	PIN_Code_Request_Negative_Reply command failed. See "Error Codes" on page 291 [Part D] for list of Error Codes.

BD_ADDR: *Size: 6 Octets*

Value	Parameter Description
0xXXXXXXXX XXXX	BD_ADDR of the Device which the PIN Code request negative reply has completed.

Event(s) generated (unless masked away):

The PIN_Code_Request_Negative_Reply command will cause a Command Complete event to be generated.

7.1.14 Change Connection Packet Type Command

Command	OCF	Command Parameters	Return Parameters
HCI_Change_Connection_ Packet_Type	0x000F	Connection_Handle, Packet_Type	

Description:

The Change_Connection_Packet_Type command is used to change which packet types can be used for a connection that is currently established. This allows current connections to be dynamically modified to support different types of user data. The Packet_Type command parameter specifies which packet types the Link Manager can use for the connection. When sending HCI ACL Data Packets the Link Manager shall only use the packet type(s) specified by the Packet_Type command parameter or the always-allowed DM1 packet type. The interpretation of the value for the Packet_Type command parameter will depend on the Link_Type command parameter returned in the Connection Complete event at the connection setup. Multiple packet types may be specified for the Packet_Type command parameter by bitwise OR operation of the different packet types. For a definition of the different packet types see the "Baseband Specification" on page 45 [Part B].

Note: The Host should enable as many packet types as possible for the Link Manager to perform efficiently. However, the Host must not enable packet types that the local device does not support.

Note: to change an eSCO connection, use the Setup Synchronous Connection command.

Command Parameters:

Connection_Handle: *Size: 2 Octets (12 Bits meaningful)*

Value	Parameter Description
0xXXXX	Connection Handle to be used to for transmitting and receiving voice or data. Returned from creating a connection. Range: 0x0000-0x0EFF (0x0F00 - 0x0FFF Reserved for future use)

Packet_Type: *Size: 2 Octets*

For ACL Link_Type

Value	Parameter Description
0x0001	Reserved for future use.
0x0002	Reserved for future use.
0x0004	Reserved for future use.
0x0008[1]	DM1
0x0010	DH1
0x0020	Reserved for future use.
0x0040	Reserved for future use.
0x0080	Reserved for future use.
0x0100	Reserved for future use.
0x0200	Reserved for future use.
0x0400	DM3
0x0800	DH3
0x1000	Reserved for future use.
0x2000	Reserved for future use.
0x4000	DM5
0x8000	DH5

1. this bit will be interpreted as set to 1 by link Controllers based on Bluetooth v1.2 or newer.

For SCO Link Type

Value	Parameter Description
0x0001	Reserved for future use.
0x0002	Reserved for future use.
0x0004	Reserved for future use.
0x0008	Reserved for future use.
0x0010	Reserved for future use.
0x0020	HV1
0x0040	HV2
0x0080	HV3
0x0100	Reserved for future use.
0x0200	Reserved for future use.
0x0400	Reserved for future use.
0x0800	Reserved for future use.
0x1000	Reserved for future use.
0x2000	Reserved for future use.
0x4000	Reserved for future use.
0x8000	Reserved for future use.

Return Parameters:

None.

Event(s) generated (unless masked away):

When the Controller receives the Change Connection Packet Type command, the Controller sends the Command Status event to the Host. In addition, when the Link Manager determines the packet type has been changed for the connection, the Controller on the local device will send a Connection Packet Type Changed event to the Host. This will be done at the local side only.
Note: no Command Complete event will be sent by the Controller to indicate that this command has been completed. Instead, the Connection Packet Type Changed event will indicate that this command has been completed.

7.1.15 Authentication Requested Command

Command	OCF	Command Parameters	Return Parameters
HCI_Authentication_ Requested	0x0011	Connection_Handle	

Description:

The Authentication_Requested command is used to try to authenticate the remote device associated with the specified Connection Handle. On an authentication failure, the Controller or Link Manager shall not automatically detach the link. The Host is responsible for issuing a Disconnect command to terminate the link if the action is appropriate.
Note**:** the Connection_Handle command parameter is used to identify the other Bluetooth device, which forms the connection. The Connection Handle should be a Connection Handle for an ACL connection.

Command Parameters:

Connection_Handle: *Size 2 Octets (12 Bits meaningful)*

Value	Parameter Description
0xXXXX	Connection Handle to be used to set up authentication for all Connection Handles with the same Bluetooth device end-point as the specified Connection Handle. Range: 0x0000-0x0EFF (0x0F00 - 0x0FFF Reserved for future use)

Return Parameters:

None.

Event(s) generated (unless masked away):

When the Controller receives the Authentication_Requested command, it sends the Command Status event to the Host. The Authentication Complete event will occur when the authentication has been completed for the connection and is indication that this command has been completed.
Note: no Command Complete event will be sent by the Controller to indicate that this command has been completed. Instead, the Authentication Complete event will indicate that this command has been completed.

Note: When the local or remote Controller does not have a link key for the specified Connection_Handle, it will request the link key from its Host, before the local Host finally receives the Authentication Complete event.

7.1.16 Set Connection Encryption Command

Command	OCF	Command Parameters	Return Parameters
HCI_Set_Connection_ Encryption	0x0013	Connection_Handle, Encryption_Enable	

Description:

The Set_Connection_Encryption command is used to enable and disable the link level encryption. Note**:** the Connection_Handle command parameter is used to identify the other Bluetooth device which forms the connection. The Connection Handle should be a Connection Handle for an ACL connection. While the encryption is being changed, all ACL traffic must be turned off for all Connection Handles associated with the remote device.

Command Parameters:

Connection_Handle: *Size 2 Octets (12 Bits meaningful)*

Value	Parameter Description
0xXXXX	Connection Handle to be used to enable/disable the link layer encryption for all Connection Handles with the same Bluetooth device end-point as the specified Connection Handle. Range: 0x0000-0x0EFF (0x0F00 - 0x0FFF Reserved for future use)

Encryption_Enable: *Size: 1 Octet*

Value	Parameter Description
0x00	Turn Link Level Encryption OFF.
0x01	Turn Link Level Encryption ON.

Return Parameters:

None.

Event(s) generated (unless masked away):

When the Controller receives the Set_Connection_Encryption command, the Controller sends the Command Status event to the Host. When the Link Manager has completed enabling/disabling encryption for the connection, the Controller on the local Bluetooth device will send an Encryption Change event to the Host, and the Controller on the remote device will also generate an Encryption Change event.
Note: no Command Complete event will be sent by the Controller to indicate that this command has been completed. Instead, the Encryption Change event will indicate that this command has been completed.

7.1.17 Change Connection Link Key Command

Command	OCF	Command Parameters	Return Parameters
HCI_Change_Connection_ Link_Key	0x0015	Connection_Handle	

Description:

The Change_Connection_Link_Key command is used to force both devices of a connection associated with the connection handle to generate a new link key. The link key is used for authentication and encryption of connections.
Note: the Connection_Handle command parameter is used to identify the other Bluetooth device forming the connection. The Connection Handle should be a Connection Handle for an ACL connection.

Command Parameters:

Connection_Handle: *Size 2 Octets (12 Bits meaningful)*

Value	Parameter Description
0xXXXX	Connection Handle used to identify a connection. Range: 0x0000-0x0EFF (0x0F00 - 0x0FFF Reserved for future use)

Return Parameters:

None.

Event(s) generated (unless masked away):

When the Controller receives the Change_Connection_Link_Key command, the Controller sends the Command Status event to the Host. When the Link Manager has changed the Link Key for the connection, the Controller on the local Bluetooth device will send a Link Key Notification event and a Change Connection Link Key Complete event to the Host, and the Controller on the remote device will also generate a Link Key Notification event. The Link Key Notification event indicates that a new connection link key is valid for the connection.
Note: no Command Complete event will be sent by the Controller to indicate that this command has been completed. Instead, the Change Connection Link Key Complete event will indicate that this command has been completed.

7.1.18 Master Link Key Command

Command	OCF	Command Parameters	Return Parameters
HCI_Master_Link_Key	0x0017	Key_Flag	

Description:

The Master Link Key command is used to force the device that is master of the piconet to use the temporary link key of the master device, or the semi-permanent link keys. The temporary link key is used for encryption of broadcast messages within a piconet, and the semi-permanent link keys are used for private encrypted point-to-point communication. The Key_Flag command parameter is used to indicate which Link Key (temporary link key of the Master, or the semi-permanent link keys) shall be used.

Command Parameters:

Key_Flag: *Size: 1 Octet*

Value	Parameter Description
0x00	Use semi-permanent Link Keys.
0x01	Use Temporary Link Key.

Return Parameters:

None.

Event(s) generated (unless masked away):

When the Controller receives the Master_Link_Key command, the Controller sends the Command Status event to the Host. When the Link Manager has changed link key, the Controller on both the local and the remote device will send a Master Link Key Complete event to the Host. The Connection Handle on the master side will be a Connection Handle for one of the existing connections to a slave. On the slave side, the Connection Handle will be a Connection Handle to the initiating master.

The Master Link Key Complete event contains the status of this command. Note: no Command Complete event will be sent by the Controller to indicate that this command has been completed. Instead, the Master Link Key Complete event will indicate that this command has been completed.

7.1.19 Remote Name Request Command

Command	OCF	Command Parameters	Return Parameters
HCI_Remote_Name_Request	0x0019	BD_ADDR, Page_Scan_Repetition_Mode, Reserved, Clock_Offset	

Description:

The Remote_Name_Request command is used to obtain the user-friendly name of another Bluetooth device. The user-friendly name is used to enable the user to distinguish one Bluetooth device from another. The BD_ADDR command parameter is used to identify the device for which the user-friendly name is to be obtained. The Page_Scan_Repetition_Mode parameter specifies the page scan repetition mode supported by the remote device with the BD_ADDR. This is the information that was acquired during the inquiry process. The Clock_Offset parameter is the difference between its own clock and the clock of the remote device with BD_ADDR. Only bits 2 through 16 of the difference are used and they are mapped to this parameter as bits 0 through 14 respectively. A Clock_Offset_Valid_Flag, located in bit 15 of the Clock_Offset command parameter, is used to indicate if the Clock Offset is valid or not. Note: if no connection exists between the local device and the device corresponding to the BD_ADDR, a temporary link layer connection will be established to obtain the name of the remote device.

Command Parameters:

BD_ADDR: *Size: 6 Octets*

Value	Parameter Description
0xXXXXXXXXXXXX	BD_ADDR for the device whose name is requested.

Page_Scan_Repetition_Mode: *Size: 1 Octet*

Value	Parameter Description
0x00	R0
0x01	R1
0x02	R2
0x03 – 0xFF	Reserved.

Reserved: *Size: 1 Octet*

Value	Parameter Description
0x00	Reserved, must be set to 0x00. See "Page Scan Mode" on page 586.

Clock_Offset: *Size: 2 Octets*

Bit format	Parameter Description
Bit 14.0	Bit 16.2 of CLKslave-CLKmaster.
Bit 15	Clock_Offset_Valid_Flag Invalid Clock Offfset = 0 Valid Clock Offset = 1

Return Parameters:

None.

Event(s) generated (unless masked away):

When the Controller receives the Remote_Name_Request command, the Controller sends the Command Status event to the Host. When the Link Manager has completed the LMP messages to obtain the remote name, the Controller on the local Bluetooth device will send a Remote Name Request Complete event to the Host. Note: no Command Complete event will be sent by the Controller to indicate that this command has been completed. Instead, only the Remote Name Request Complete event will indicate that this command has been completed.

7.1.20 Remote Name Request Cancel Command

Command	OCF	Command Parameters	Return Parameters
HCI_Remote_Name_Request_Cancel	0x001A	BD_ADDR	Status, BD_ADDR

Description:

This command is used to request cancellation of the ongoing remote name request process, which was started by the Remote Name Request command.

Command Parameters:

BD_ADDR: *Size: 6 Octets*

Value	Parameter Description
0xXXXXXXXXXXXX	BD_ADDR of the Remote Name Request command that was issued before and that is subject of this cancellation request

Return Parameters:

Status: *Size: 1 Octet*

Value	Parameter Description
0x00	Remote Name Request Cancel command succeeded
0x01-0xff	Remote Name Request Cancel command failed. See "Error Codes" on page 291 [Part D] for list of error codes

BD_ADDR: *Size: 6 Octets*

Value	Parameter Description
0xXXXXXXXXXXXX	BD_ADDR of the Remote Name Request Cancel command that was issued before and that was subject of this cancellation request

Event(s) generated (unless masked away):

When the Remote Name Request Cancel command has completed, a Command Complete event shall be generated.

If the Remote Name Request Cancel command is sent to the Controller without a preceding Remote Name Request command to the same device, the Controller will return a Command Complete event with the error code *Invalid HCI Command Parameters* (0x12).

The error codes *Unspecified Error* (0x1F) and *Command Disallowed* (0x0C) may be used if the Controller does not support this command.

The Remote Name Request Complete event for the corresponding Remote Name Request Command shall always be sent. The Remote Name Request Complete event shall be sent after the Command Complete event for the Remote Name Request Cancel command. If the cancellation was successful, the Remote Name Request Complete event will be generated with the error code *Unknown Connection Identifier (0x02)*.

7.1.21 Read Remote Supported Features Command

Command	OCF	Command Parameters	Return Parameters
HCI_Read_Remote_Supported_Features	0x001B	Connection_Handle	

Description:

This command requests a list of the supported features for the remote device identified by the Connection_Handle parameter. The Connection_Handle must be a Connection_Handle for an ACL connection. The Read Remote Supported Features Complete event will return a list of the LMP features. For details see "Link Manager Protocol" on page 189 [Part C].

Command Parameters:

Connection_Handle: *Size: 2 Octets (12 Bits meaningful)*

Value	Parameter Description
0xXXXX	Specifies which Connection Handle's LMP-supported features list to get. Range: 0x0000-0x0EFF (0x0F00 - 0x0FFF Reserved for future use)

Return Parameters:

None.

Event(s) generated (unless masked away):

When the Controller receives the Read_Remote_Supported_Features command, the Controller sends the Command Status event to the Host. When the Link Manager has completed the LMP messages to determine the remote features, the Controller on the local Bluetooth device will send a Read Remote Supported Features Complete event to the Host. The Read Remote Supported Features Complete event contains the status of this command, and parameters describing the supported features of the remote device. Note: no Command Complete event will be sent by the Controller to indicate that this command has been completed. Instead, the Read Remote Supported Features Complete event will indicate that this command has been completed.

7.1.22 Read Remote Extended Features Command

Command	OCF	Command Parameters	Return Parameters
HCI_Read_Remote_Extended_Features	0x001C	Connection_Handle, Page Number	

Description:

The HCI_Read_Remote_Extended_Features command returns the requested page of the extended LMP features for the remote device identified by the specified connection handle. The connection handle must be the connection handle for an ACL connection. This command is only available if the extended features feature is implemented by the remote device. The Read Remote Extended Features Complete event will return the requested information.
For details see "Link Manager Protocol" on page 189 [Part C].

Command Parameters:

Connection_Handle: *Size: 2 Octets (12 Bits meaningful)*

Value	Parameter Description
0xXXXX	The connection handle identifying the remote device for which extended feature information is required. Range: 0x0000-0x0EFF (0x0F00-0x0FFF Reserved for future use)

Page Number: *Size: 1 Octet*

Value	Parameter Description
0x00	Requests the normal LMP features as returned by HCI_Read_Remote_Supported_Features
0x01-0xFF	Return the corresponding page of features

Return Parameters:

None.

Event(s) generated (unless masked away):

When the Controller receives the HCI_Read_Remote_Extended_Features command the Controller sends the Command Status command to the Host. When the Link Manager has completed the LMP sequence to determine the remote extended features the controller on the local device will generate a Read Remote Extended Features Complete event to the host. The Read Remote Extended Features Complete event contains the page number and the remote features returned by the remote device.

Note: no Command Complete event will ever be sent by the Controller to indicate that this command has been completed. Instead the Read Remote Extended Features Complete event will indicate that this command has been completed.

7.1.23 Read Remote Version Information Command

Command	OCF	Command Parameters	Return Parameters
HCI_Read_Remote_Version_ Information	0x001D	Connection_Handle	

Description:

This command will obtain the values for the version information for the remote Bluetooth device identified by the Connection_Handle parameter. The Connection_Handle must be a Connection_Handle for an ACL connection.

Command Parameters:

Connection_Handle: *Size: 2 Octets (12 Bits meaningful)*

Value	Parameter Description
0xXXXX	Specifies which Connection Handle's version information to get. Range: 0x0000-0x0EFF (0x0F00 - 0x0FFF Reserved for future use)

Return Parameters:

None.

Event(s) generated (unless masked away):

When the Controller receives the Read_Remote_Version_Information command, the Controller sends the Command Status event to the Host. When the Link Manager has completed the LMP messages to determine the remote version information, the Controller on the local Bluetooth device will send a Read Remote Version Information Complete event to the Host. The Read Remote Version Information Complete event contains the status of this command, and parameters describing the version and subversion of the LMP used by the remote device.
Note: no Command Complete event will be sent by the Controller to indicate that this command has been completed. Instead, the Read Remote Version Information Complete event will indicate that this command has been completed.

7.1.24 Read Clock Offset Command

Command	OCF	Command Parameters	Return Parameters
HCI_Read_Clock_Offset	0x001F	Connection_Handle	

Description:

Both the System Clock and the clock offset to a remote device are used to determine what hopping frequency is used by a remote device for page scan. This command allows the Host to read clock offset to remote devices. The clock offset can be used to speed up the paging procedure when the local device tries to establish a connection to a remote device, for example, when the local Host has issued Create_Connection or Remote_Name_Request. The Connection_Handle must be a Connection_Handle for an ACL connection.

Command Parameters:

Connection_Handle: *Size: 2 Octets (12 bits meaningful)*

Value	Parameter Description
0xXXXX	Specifies which Connection Handle's Clock Offset parameter is returned. Range: 0x0000-0x0EFF (0x0F00 - 0x0FFF Reserved for future use)

Return Parameters:

None.

Event(s) generated (unless masked away):

When the Controller receives the Read_Clock_Offset command, the Controller sends the Command Status event to the Host. If this command was requested at the master and the Link Manager has completed the LMP messages to obtain the Clock Offset information, the Controller on the local Bluetooth device will send a Read Clock Offset Complete event to the Host.
Note: no Command Complete event will be sent by the Controller to indicate that this command has been completed. Instead, only the Read Clock Offset Complete event will indicate that this command has been completed. If the command is requested at the slave, the LM will immediately send a Command Status event and a Read Clock Offset Complete event to the Host, without an exchange of LMP PDU.

7.1.25 Read LMP Handle Command

Command	OCF	Command Parameters	Return Parameters
HCI_Read_LMP_Handle	0x0020	Connection_Handle	Status, Connection_Handle, LMP_Handle, Reserved

Description:

This command will read the current LMP Handle associated with the Connection_Handle. The Connection_Handle must be a SCO or eSCO Handle. If the Connection_Handle is a SCO connection handle, then this command shall read the LMP SCO Handle for this connection. If the Connection_Handle is an eSCO connection handle, then this command shall read the LMP eSCO Handle for this connection.

Command Parameters:

Connection_Handle: *Size 2 Octets (12 bits meaningful)*

Value	Parameter Description
0xXXXX	Connection Handle to be used to identify which connection to be used for reading the LMP Handle. This must be a synchronous handle. Range: 0x0000-0x0EFF (0x0F00 – 0x0FFF Reserved for future use)

Return Parameters:

Status: *Size: 1 Octet*

Value	Parameter Description
0x00	Read_LMP_Handle command succeeded.
0x01 – 0xFF	Read_LMP_Handle command failed. See "Error Codes" on page 291 [Part D] for list of Error Codes.

Connection_Handle: *Size: 2 Octets (12 bits meaningful)*

Value	Parameter Description
0xXXXX	The Connection Handle for the Connection for which the LMP_Handle has been read. Range: 0x0000-0x0EFF (0x0F00 – 0x0FFF Reserved for future use)

LMP_Handle: *Size: 1 Octet*

Value	Parameter Description
0xXX	The LMP Handle is the LMP Handle that is associated with this connection handle. For a synchronous handle, this would be the LMP Synchronous Handle used when negotiating the synchronous connection in the link manager.

Reserved: *Size: 4 Octets*

Value	Parameter Description
0xXXXXXXXX	This parameter is reserved, must to set to zero.

Events(s) generated (unless masked away):

When the Read_LMP_Handle command has completed, a Command Complete event will be generated.

7.1.26 Setup Synchronous Connection Command

Command	OCF	Command Parameters	Return Parameters
HCI_Setup_Synchronous_ Connection	0x0028	Connection_Handle Transmit_Bandwidth Receive_Bandwidth Max_Latency Voice_Setting Retransmission_Effort Packet Type	

Description:

The HCI Setup Synchronous Connection command adds a new or modifies an existing synchronous logical transport (SCO or eSCO) on a physical link depending on the Connection_Handle parameter specified. If the Connection_Handle refers to an ACL link a new synchronous logical transport will be added. If the Connection_Handle refers to an already existing synchronous logical transport (eSCO only) this link will be modified.The parameters are specified per connection. This synchronous connection can be used to transfer synchronous voice at 64kbps or transparent synchronous data.

When used to setup a new synchronous logical transport, the Connection_Handle parameter shall specify an ACL connection with which the new synchronous connection will be associated. The other parameters relate to the negotiation of the link, and may be reconfigured during the lifetime of the link. The transmit and receive bandwidth specify how much bandwidth shall be available for transmitting and for receiving data. While in many cases the receive and transmit bandwidth parameters may be equal, they may be different. The latency specifies an upper limit to the time in milliseconds between the eSCO (or SCO) instants, plus the size of the retransmission window, plus the length of the reserved synchronous slots for this logical transport. The content format specifies the settings for voice or transparent data on this connection. The retransmission effort specifies the extra resources that are allocated to this connection if a packet may need to be retransmitted. The Retransmission_Effort parameter shall be set to indicate the required behaviour, or to don't care.

When used to modify an existing synchronous logical transport, the Transmit_Bandwidth, Receive_Bandwidth and Voice_Settings shall be set to the same values as were used during the initial setup. The Packet_Type, Retransmission_Effort and Max_Latency parameters may be modified.

The Packet_Type field is a bitmap specifying which packet types the LM shall accept in the negotiation of the link parameters. Multiple packet types are specified by bitwise OR of the packet type codes in the table. At least one packet type must be specified for each negotiation. It is recommended to enable as many packet types as possible. Note that it is allowed to enable packet types that are not supported by the local device.

A connection handle for the new synchronous connection will be returned in the synchronous connection complete event.

Note: The link manager may choose any combination of packet types, timing, and retransmission window sizes that satisfy the parameters given. This may be achieved by using more frequent transmissions of smaller packets. The link manager may choose to set up either a SCO or an eSCO connection, if the parameters allow, using the corresponding LMP sequences.

Note: To modify a SCO connection, use the Change Connection Packet Type command.

Note: If the lower layers cannot acheive the exact transmit and receive bandwidth requested subject to the other parameters, then the link shall be rejected.

A synchronous connection may only be created when an ACL connection already exists and when it is not in park state.

Command Parameters:

Connection_Handle: *2 octets (12 bits meaningful)*

Value	Parameter Description
0xXXXX	Connection Handle for the ACL connection being used to create a synchronousConnection or for the existing Connection that shall be modified. Range: 0x0000-0x0EFF (0x0F00 - 0x0FFF Reserved for future use)

Transmit_Bandwidth: *4 octets*

Value	Parameter Description
0xXXXXXXXX	Transmit bandwidth in octets per second.

Receive_Bandwidth: *4 octets*

Value	Parameter Description
0xXXXXXXXX	Receive bandwidth in octets per second.

Max_Latency: *2 octets*

Value	Parameter Description
0x0000-0x0003	Reserved
0x0004-0xFFFE	This is a value in milliseconds representing the upper limit of the sum of the synchronous interval and the size of the eSCO window.
0xFFFF	Don't care.

Voice_Setting: *2 octets (10 bits meaningful)*

Value	Parameter Description
See Section 6.12 on page 361.	

Retransmission_Effort: *1 octet*

Value	Parameter Description
0x00	No retransmissions
0x01	At least one retransmission, optimize for power consumption.
0x02	At least one retransmission, optimize for link quality
0xFF	Don’t care
0x03 – 0xFE	Reserved

Packet_Type: *2 octets*

Value	Parameter Description
0x0001	HV1
0x0002	HV2
0x0004	HV3
0x0008	EV3
0x0010	EV4
0x0020	EV5
0x0040	Reserved for future use
0x0080	Reserved for future use
0x0100	Reserved for future use
0x0200	Reserved for future use
0x0400	Reserved for future use
0x0800	Reserved for future use
0x1000	Reserved for future use
0x2000	Reserved for future use
0x4000	Reserved for future use
0x8000	Reserved for future use

Return Parameters:

None

Event(s) generated (unless masked away)

When the Controller receives the Setup_Synchronous_Connection command, it sends the Command Status event to the Host. In addition, when the LM determines the connection is established, the local Controller will send a Synchronous Connection Complete event to the local Host, and the remote Controller will send a Synchronous Connection Complete event or a Connection Complete event to the remote Host. The synchronous Connection Complete event contains the Connection Handle if this command is successful.

If this command is used to change the parameters of an existing eSCO link, the Synchronous Connection Changed Event is sent to both hosts. In this case no Connection Setup Complete Event or Connection Request Event will be sent to either host. This command cannot be used to change the parameters of an SCO link.

Note: no Command Complete event will be sent by the Controller to indicate that this command has been completed. Instead, the synchronous Connection Complete event will indicate that this command has been completed.

7.1.27 Accept Synchronous Connection Request Command

Command	OCF	Command Parameters	Return Parameters
HCI_Accept_ Synchronous_ Connection_Request	0x0029	BD_ADDR Transmit_Bandwidth Receive_Bandwidth Max_Latency Content_Format Retransmission_Effort Packet_Type	

Description:

The Accept_Synchronous_Connection_Request command is used to accept an incoming request for a synchronous connection and to inform the local Link Manager about the acceptable parameter values for the synchronous connection. The Command shall only be issued after a Connection_Request event with link type SCO or eSCO has occurred. Connection_Request event contains the BD_ADDR of the device requesting the connection. The decision to accept a connection must be taken before the connection accept timeout expires on the local device.

The parameter set of the Accept_Synchronous_Connection_Request command is the same as for the Setup_Synchronous_Connection command. The Transmit_Bandwidth and Receive_Bandwidth values are required values for the new link and shall be met. The Max_Latency is an upper bound to the acceptable latency for the Link, as defined in Section 7.1.26 on page 411 Setup_Synchronous_Connection and shall not be exceeded. Content_Format specifies the encoding in the same way as in the Setup_Synchronous_Connection command and shall be met. The Retransmission_Effort parameter shall be set to indicate the required behaviour, or to don't care. The Packet_Type parameter is a bit mask specifying the synchronous packet types that are allowed on the link and shall be met. The reserved bits in the Packet_Type field shall be set to one.

If the Link Type of the incoming request is SCO, then only the Transmit_Bandwidth, Max_Latency, Content_Format, and Packet_Type fields are valid.

If the Connection_Request event is masked away, and the Controller is not set to auto-accept this connection attempt, the Controller will automatically reject it. If the controller is set to automatically accept the connection attempt, the LM should assume default parameters. In that case the Synchronous_Connection_Complete Event shall be generated, unless masked away.

Command Parameters:

BD_ADDR: *6 octets*

Value	Parameter Description
0xXXXXXXXXXXXX	BD_ADDR of the device requesting the connection

Transmit_Bandwidth: *4 octets*

Value	Parameter Description
0x00000000-0xFFFFFFFE	Maximum possible transmit bandwidth in octets per second.
0xFFFFFFFF	Don’t care

Default: Don’t care

Receive_Bandwidth: *4 octets*

Value	Parameter Description
0x00000000-0xFFFFFFFE	Maximum possible receive bandwidth in octets per second.
0xFFFFFFFF	Don’t care

Default: Don’t care

Max_Latency: *2 octets*

Value	Parameter Description
0x0000-0x0003	Reserved
0x0004-0xFFFE	This is a value in milliseconds representing the upper limit of the sum of the synchronous interval and the size of the eSCO window.
0xFFFF	Don't care.

Default: Don't care

Content_Format: *2 octets (10 bits meaningful)*

Value	Parameter Description
00XXXXXXXX	Input Coding: Linear
01XXXXXXXX	Input Coding: u-law
10XXXXXXXX	Input Coding: A-law
11XXXXXXXX	Reserved for future use.
XX00XXXXXX	Input Data Format: 1's complement
XX01XXXXXX	Input Data Format: 2's complement
XX10XXXXXX	Input Data Format: Sign-Magnitude
XX11XXXXXX	Input Data Format: Unsigned
XXXX0XXXXX	Input Sample Size: 8 bit (only for Linear PCM)
XXXX1XXXXX	Input Sample Size: 16 bit (only for Linear PCM)
XXXXXnnnXX	Linear PCM Bit Position: number of bit positions that MSB of sample is away from starting at MSB (only for Linear PCM)
XXXXXXXX00	Air Coding Format: CVSD
XXXXXXXX01	Air Coding Format: u-law
XXXXXXXX10	Air Coding Format: A-law
XXXXXXXX11	Air Coding Format: Transparent Data

Default: When links are auto-accepted, the values written by the HCI_Write_Voice_Settings are used.

Retransmission_Effort: *1 octet*

Value	Parameter Description
0x00	No retransmissions
0x01	At least one retransmission, optimize for power consumption.
0x02	At least one retransmission, optimize for link quality.
0x03-0xFE	Reserved
0xFF	Don't care

Default: Don't care

Packet_Type: *2 octets*

Value	Parameter Description
0x0001	HV1
0x0002	HV2
0x0004	HV3
0x0008	EV3
0x0010	EV4
0x0020	EV5
0x0040	Reserved for future use
0x0080	Reserved for future use
0x0100	Reserved for future use
0x0200	Reserved for future use
0x0400	Reserved for future use
0x0800	Reserved for future use
0x1000	Reserved for future use
0x2000	Reserved for future use
0x4000	Reserved for future use
0x8000	Reserved for future use

Default: 0xFFFF

Return Parameters:

None

Event(s) generated (unless masked away):

The Accept_Synchronous_Request command will cause the Command Status event to be sent from the Host Controller when the Host Controller starts setting up the connection. When the link setup is complete, the local Controller will send a Synchronous Connection Complete event to its Host, and the remote Controller will send a Connection Complete event or a Synchronous Connection Complete event to the Host. The Synchronous Connection Complete will contain the connection handle and the link parameters if the setup is successful. No Command Complete event will be sent by the host controller as the result of this command.

7.1.28 Reject Synchronous Connection Request Command

Command	OCF	Command Parameters	Return Parameters
HCI_Reject_Synchronous_ Connection_Request	0x002A	BD_ADDR Reason	

Description:

The Reject_Synchronous_Connection_Request is used to decline an incoming request for a synchronous link. It shall only be issued after a Connection Request Event with Link Type equal to SCO or eSCO has occurred. The Connection Request Event contains the BD_ADDR of the device requesting the connection. The Reason parameter will be returned to the initiating host in the Status parameter of the Synchronous connection complete event on the remote side.

Command Parameters:

BD_ADDR: *6 octets*

Value	Parameter Description
0xXXXXXXXXXXXX	BD_ADDR of the device requesting the connection

Reason: *1 octet*

Value	Parameter Description
0x0D-0x0F	Host Reject Error Code. See "Error Codes" on page 291 [Part D] for error codes and description.

Return Parameters:

None.

Event(s) Generated (unless masked away):

When the Host Controller receives the Reject_Synchronous_Connection_Request, it sends a Command Status Event to the Host. When the setup is terminated, the local Controller will send a Synchronous Connection Complete event to its Host, and the remote Controller will send a Connection Complete event or a Synchronous Connection Complete event to the Host with the Reason code from this command. No Command complete Event will be sent by the Host Controller to indicate that this command has been completed.

7.2 LINK POLICY COMMANDS

The Link Policy Commands provide methods for the Host to affect how the Link Manager manages the piconet. When Link Policy Commands are used, the LM still controls how Bluetooth piconets and scatternets are established and maintained, depending on adjustable policy parameters. These policy commands modify the Link Manager behavior that can result in changes to the link layer connections with Bluetooth remote devices.
Note: only one ACL connection can exist between two Bluetooth Devices, and therefore there can only be one ACL HCI Connection Handle for each physical link layer Connection. The Bluetooth Controller provides policy adjustment mechanisms to provide support for a number of different policies. This capability allows one Bluetooth module to be used to support many different usage models, and the same Bluetooth module can be incorporated in many different types of Bluetooth devices. For the Link Policy Commands, the OGF is defined as 0x02.

7.2.1 Hold Mode Command

Command	OCF	Command Parameters	Return Parameters
HCI_Hold_Mode	0x0001	Connection_Handle, Hold_Mode_Max_Interval, Hold_Mode_Min_Interval	

Description:

The Hold_Mode command is used to alter the behavior of the Link Manager, and have it place the ACL baseband connection associated by the specified Connection Handle into the hold mode. The Hold_Mode_Max_Interval and Hold_Mode_Min_Interval command parameters specify the length of time the Host wants to put the connection into the hold mode. The local and remote devices will negotiate the length in the hold mode. The Hold_Mode_Max_Interval parameter is used to specify the maximum length of the Hold interval for which the Host may actually enter into the hold mode after negotiation with the remote device. The Hold interval defines the amount of time between when the Hold Mode begins and when the Hold Mode is completed. The Hold_Mode_Min_Interval parameter is used to specify the minimum length of the Hold interval for which the Host may actually enter into the hold mode after the negotiation with the remote device. Therefore the Hold_Mode_Min_Interval cannot be greater than the Hold_Mode_Max_Interval. The Controller will return the actual Hold interval in the Interval parameter of the Mode Change event, if the command is successful. This command enables the Host to support a low-power policy for itself or several other Bluetooth devices, and allows the devices to enter Inquiry Scan, Page Scan, and a number of other possible actions.
Note: the connection handle cannot be of the SCO or eSCO link type

If the Host sends data to the Controller with a Connection_Handle corresponding to a connection in hold mode, the Controller will keep the data in its buffers until either the data can be transmitted (the hold mode has ended) or a flush, a flush timeout or a disconnection occurs. This is valid even if the Host has not yet been notified of the hold mode through a Mode Change event when it sends the data.
Note: the above is not valid for an HCI Data Packet sent from the Host to the Controller on the master side where the Connection_Handle is a Connection_Handle used for broadcast and the Broadcast_Flag is set to Active Broadcast or Piconet Broadcast. The broadcast data will then never be received by slaves in hold mode.

The Hold_Mode_Max_Interval shall be less than the Link Supervision Timeout configuration parameter.

Command Parameters:

Connection_Handle: *Size: 2 Octets (12 Bits meaningful)*

Value	Parameter Description
0xXXXX	Connection Handle to be used to identify a connection. Range: 0x0000-0x0EFF (0x0F00 - 0x0FFF Reserved for future use)

Hold_Mode_Max_Interval: *Size: 2 Octets*

Value	Parameter Description
N = 0xXXXX	Maximum acceptable number of Baseband slots to wait in Hold Mode. Time Length of the Hold = N * 0.625 msec (1 Baseband slot) Range for N: 0x0002-0xFFFE; only even values are valid. Time Range: 1.25ms - 40.9 sec Mandatory Range: 0x0014 to 0x8000

Hold_Mode_Min_Interval: *Size: 2 Octets*

Value	Parameter Description
N = 0xXXXX	Minimum acceptable number of Baseband slots to wait in Hold Mode. Time Length of the Hold = N * 0.625 msec (1 Baseband slot) Range for N: 0x0002-0xFF00; only even values are valid Time Range: 1.25 msec - 40.9 sec Mandatory Range: 0x0014 to 0x8000

Return Parameters:

None.

Event(s) generated (unless masked away):

The Controller sends the Command Status event for this command to the Host when it has received the Hold_Mode command. The Mode Change event will occur when the Hold Mode has started and the Mode Change event will occur again when the Hold Mode has completed for the specified connection handle. The Mode Change event signaling the end of the Hold Mode is an estimation of the hold mode ending if the event is for a remote Bluetooth device.
Note: no Command Complete event will be sent by the Controller to indicate that this command has been completed. Instead, only the Mode Change event will indicate that this command has been completed. If an error occurs after the Command Status event has occurred, then the status in the Mode Change event will indicate the error.

7.2.2 Sniff Mode Command

Command	OCF	Command Parameters	Return Parameters
HCI_Sniff_Mode	0x0003	Connection_Handle, Sniff_Max_Interval, Sniff_Min_Interval, Sniff_Attempt, Sniff_Timeout	

Description:

The Sniff Mode command is used to alter the behavior of the Link Manager and have it place the ACL baseband connection associated with the specified Connection Handle into the sniff mode. The Connection_Handle command parameter is used to identify which ACL link connection is to be placed in sniff mode. The Sniff_Max_Interval and Sniff_Min_Interval command parameters are used to specify the requested acceptable maximum and minimum periods in the Sniff Mode. The Sniff_Min_Interval shall not be greater than the Sniff_Max_Interval. The sniff interval defines the amount of time between each consecutive sniff period. The Controller will return the actual sniff interval in the Interval parameter of the Mode Change event, if the command is successful. For a description of the meaning of the Sniff_Attempt and Sniff_Timeout parameters, see Baseband Specification, Section 8.7, on page 163. Sniff_Attempt is there called $N_{sniff\ attempt}$ and Sniff_Timeout is called $N_{sniff\ timeout}$. This command enables the Host to support a low-power policy for itself or several other Bluetooth devices, and allows the devices to enter Inquiry Scan, Page Scan, and a number of other possible actions.
Note: in addition, the connection handle cannot be one of the synchronous link types. If the Host sends data to the Controller with a Connection_Handle corresponding to a connection in sniff mode, the Controller will keep the data in its buffers until either the data can be transmitted or a flush, a flush timeout or a disconnection occurs. This is valid even if the Host has not yet been notified of the sniff mode through a Mode Change event when it sends the data. Note that it is possible for the master to transmit data to a slave without exiting sniff mode

(see description in Baseband Specification, Section 8.7, on page 163).
Note: the above is not valid for an HCI Data Packet sent from the Host to the Controller on the master side where the Connection_Handle is a Connection_Handle used for broadcast and the Broadcast_Flag is set to Active Broadcast or Piconet Broadcast. In that case, the broadcast data will only be received by a slave in sniff mode if that slave happens to listen to the master when the broadcast is made.

The Sniff_Max_Interval shall be less than the Link Supervision Timeout configuration parameter.

Command Parameters:

Connection_Handle: *Size: 2 Octets (12 Bits meaningful)*

Value	Parameter Description
0xXXXX	Connection Handle to be used to identify a connection. Range: 0x0000-0x0EFF (0x0F00 - 0x0FFF Reserved for future use)

Sniff_Max_Interval: *Size: 2 Octets*

Value	Parameter Description
N = 0xXXXX	Range: 0x0002 to 0xFFFE; only even values are valid Mandatory Range: 0x0006 to 0x0540 Time = N * 0.625 msec Time Range: 1.25 msec to 40.9 sec

Sniff_Min_Interval: *Size: 2 Octets*

Value	Parameter Description
N = 0xXXXX	Range: 0x0002 to 0xFFFE; only even values are valid Mandatory Range: 0x0006 to 0x0540 Time = N * 0.625 msec Time Range: 1.25 msec to 40.9 sec)

Sniff_Attempt: *Size: 2 Octets*

Value	Parameter Description
N = 0xXXXX	Number of Baseband receive slots for sniff attempt. Length = N* 1.25 msec Range for N: 0x0001 – 0x7FFF Time Range: 0.625msec - 40.9 Seconds Mandatory Range for Controller: 1 to $T_{sniff}/2$

Sniff_Timeout: *Size: 2 Octets*

Value	Parameter Description
N = 0xXXXX	Number of Baseband receive slots for sniff timeout. Length = N * 1.25 msec Range for N: 0x0000 – 0x7FFF Time Range: 0 msec - 40.9 Seconds Mandatory Range for Controller: 0 to 0x0028

Return Parameters:

None.

Event(s) generated (unless masked away):

The Controller sends the Command Status event for this command to the Host when it has received the Sniff_Mode command. The Mode Change event will occur when the Sniff Mode has started for the specified connection handle. Note: no Command Complete event will be sent by the Controller to indicate that this command has been completed. Instead only the Mode Change event will indicate that this command has been completed. If an error occurs after the Command Status event has occurred, then the status in the Mode Change event will indicate the error.

7.2.3 Exit Sniff Mode Command

Command	OCF	Command Parameters	Return Parameters
HCI_Exit_Sniff_Mode	0x0004	Connection_Handle	

Description:

The Exit_Sniff_Mode command is used to end the sniff mode for a connection handle, which is currently in sniff mode. The Link Manager will determine and issue the appropriate LMP commands to remove the sniff mode for the associated Connection Handle.
Note: in addition, the connection handle cannot be one of the synchronous link types.

Command Parameters:

Connection_Handle: *Size: 2 Octets (12 Bits meaningful)*

Value	Parameter Description
0xXXXX	Connection Handle to be used to identify a connection. Range: 0x0000-0x0EFF (0x0F00 - 0x0FFF Reserved for future use)

Return Parameters:

None.

Event(s) generated (unless masked away):

A Command Status event for this command will occur when Controller has received the Exit_Sniff_Mode command. The Mode Change event will occur when the Sniff Mode has ended for the specified connection handle.
Note: no Command Complete event will be sent by the Controller to indicate that this command has been completed. Instead, only the Mode Change event will indicate that this command has been completed.

7.2.4 Park State Command

Command	OCF	Command Parameters	Return Parameters
HCI_Park_State	0x0005	Connection_Handle, Beacon_Max_Interval, Beacon_Min_Interval	

Description:

The Park State command is used to alter the behavior of the Link Manager, and have the LM place the baseband connection associated by the specified Connection Handle into Park state. The Connection_Handle command parameter is used to identify which connection is to be placed in Park state. The Connection_Handle must be a Connection_Handle for an ACL connection. The Beacon Interval command parameters specify the acceptable length of the interval between beacons. However, the remote device may request shorter interval. The Beacon_Max_Interval parameter specifies the acceptable longest length of the interval between beacons. The Beacon_Min_Interval parameter specifies the acceptable shortest length of the interval between beacons. Therefore, the Beacon Min Interval cannot be greater than the Beacon Max Interval. The Controller will return the actual Beacon interval in the Interval parameter of the Mode Change event, if the command is successful. This command enables the Host to support a low-power policy for itself or several other Bluetooth devices, allows the devices to enter Inquiry Scan, Page Scan, provides support for large number of Bluetooth Devices in a single piconet, and a number of other possible activities.
Note: when the Host issues the Park State command, no Connection Handles for synchronous connections are allowed to exist to the remote device that is identified by the Connection_Handle parameter. If one or more Connection Handles for synchronous connections exist to that device, depending on the implementation, a Command Status event or a Mode Change event (following a Command Status event where Status=0x00) will be returned with the error code 0x0C *Command Disallowed*.
If the Host sends data to the Controller with a Connection_Handle corresponding to a parked connection, the Controller will keep the data in its buffers until either the data can be transmitted (after unpark) or a flush, a flush timeout or a disconnection occurs. This is valid even if the Host has not yet been notified of park state through a Mode Change event when it sends the data.
Note: the above is not valid for an HCI Data Packet sent from the Host to the Controller on the master side where the Connection_Handle is a Connection_Handle used for Piconet Broadcast and the Broadcast_Flag is set to Piconet Broadcast. In that case, slaves in park state will also receive the broadcast data. (If the Broadcast_Flag is set to Active Broadcast, the broadcast data will usually not be received by slaves in park state.)
It is possible for the Controller to do an automatic unpark to transmit data and then park the connection again depending on the value of the Link_Policy_Settings parameter (see Write_Link_Policy_Settings) and depending on whether the imple-

mentation supports this or not (optional feature). The optional feature of automatic unpark/park can also be used for link supervision. Whether Mode Change events are returned or not at automatic unpark/park if this is implemented, is vendor specific. This could be controlled by a vendor specific HCI command.

Command Parameters:

Connection_Handle: *Size: 2 Octets (12 Bits meaningful)*

Value	Parameter Description
0xXXXX	Connection Handle to be used to identify a connection. Range: 0x0000-0x0EFF (0x0F00 - 0x0FFF Reserved for future use)

Beacon_Max_Interval: *Size: 2 Octets*

Value	Parameter Description
N = 0xXXXX	Range: 0x000E to 0xFFFE; only even values are valid Mandatory Range: 0x000E to 0x1000 Time = N * 0.625 msec Time Range: 8.75 msec to 40.9 sec

Beacon_Min_Interval *Size: 2 Octets*

Value	Parameter Description
N = 0xXXXX	Range: 0x000E to 0xFFFE; only even values are valid Mandatory Range: 0x000E to 0x1000 Time = N * 0.625 msec Time Range: 8.75 msec to 40.9 sec

Return Parameters:

None.

Event(s) generated (unless masked away):

The Controller sends the Command Status event for this command to the Host when it has received the Park State command. The Mode Change event will occur when the Park State has started for the specified connection handle.
Note: no Command Complete event will be sent by the Controller to indicate that this command has been completed. Instead, only the Mode Change event will indicate that this command has been completed. If an error occurs after the Command Status event has occurred, then the status in the Mode Change event will indicate the error.

7.2.5 Exit Park State Command

Command	OCF	Command Parameters	Return Parameters
HCI_Exit_Park_State	0x0006	Connection_Handle	

Description:

The Exit_Park_State command is used to switch the Bluetooth device from park state back to the active mode. This command may only be issued when the device associated with the specified Connection Handle is in park state. The Connection_Handle must be a Connection_Handle for an ACL connection. This function does not complete immediately.

Command Parameters:

Connection_Handle: *Size: 2 Octets (12 Bits meaningful)*

Value	Parameter Description
0xXXXX	Connection Handle to be used to identify a connection. Range: 0x0000-0x0EFF (0x0F00 - 0x0FFF Reserved for future use)

Return Parameters:

None.

Event(s) generated (unless masked away):

A Command Status event for this command will occur when the Controller has received the Exit_Park_State command. The Mode Change event will occur when park state has ended for the specified connection handle.
Note: no Command Complete event will be sent by the Controller to indicate that this command has been completed. Instead, only the Mode Change event will indicate that this command has been completed.

7.2.6 QoS Setup Command

Command	OCF	Command Parameters	Return Parameters
HCI_QoS_Setup	0x0007	Connection_Handle, Flags, Service_Type, Token_Rate, Peak_Bandwidth, Latency, Delay_Variation	

Description:

The QoS_Setup command is used to specify Quality of Service parameters for a connection handle. The Connection_Handle must be a Connection_Handle for an ACL connection. These QoS parameter are the same parameters as L2CAP QoS. For more detail see "Logical Link Control and Adaptation Protocol Specification" on page 15[vol. 3]. This allows the Link Manager to have all of the information about what the Host is requesting for each connection. The LM will determine if the QoS parameters can be met. Bluetooth devices that are both slaves and masters can use this command. When a device is a slave, this command will trigger an LMP request to the master to provide the slave with the specified QoS as determined by the LM. When a device is a master, this command is used to request a slave device to accept the specified QoS as determined by the LM of the master. The Connection_Handle command parameter is used to identify for which connection the QoS request is requested.

Command Parameters:

Connection_Handle: *Size: 2 Octets (12 Bits meaningful)*

Value	Parameter Description
0xXXXX	Connection Handle to be used to identify which connection for the QoS Setup. Range: 0x0000-0x0EFF (0x0F00 - 0x0FFF Reserved for future use)

Flags: *Size: 1 Octet*

Value	Parameter Description
0x00 – 0xFF	Reserved for Future Use.

Service_Type: *Size: 1 Octet*

Value	Parameter Description
0x00	No Traffic.
0x01	Best Effort.
0x02	Guaranteed.
0x03-0xFF	Reserved for Future Use.

Token_Rate: *Size: 4 Octets*

Value	Parameter Description
0xXXXXXXXX	Token Rate in octets per second.

Peak_Bandwidth: *Size: 4 Octets*

Value	Parameter Description
0xXXXXXXXX	Peak Bandwidth in octets per second.

Latency: *Size: 4 Octets*

Value	Parameter Description
0xXXXXXXXX	Latency in microseconds.

Delay_Variation: *Size: 4 Octets*

Value	Parameter Description
0xXXXXXXXX	Delay Variation in microseconds.

Return Parameters:

None.

Event(s) generated (unless masked away):

When the Controller receives the QoS_Setup command, the Controller sends the Command Status event to the Host. When the Link Manager has completed the LMP messages to establish the requested QoS parameters, the Controller on the local Bluetooth device will send a QoS Setup Complete event to the Host, and the event may also be generated on the remote side if there was LMP negotiation. The values of the parameters of the QoS Setup Complete event may, however, be different on the initiating and the remote side. The QoS Setup Complete event returned by the Controller on the local side contains the status of this command, and returned QoS parameters describing the supported QoS for the connection.
Note: No Command Complete event will be sent by the Controller to indicate that this command has been completed. Instead, the QoS Setup Complete event will indicate that this command has been completed.

7.2.7 Role Discovery Command

Command	OCF	Command Parameters	Return Parameters
HCI_Role_Discovery	0x0009	Connection_Handle	Status, Connection_Handle, Current_Role

Description:

The Role_Discovery command is used for a Bluetooth device to determine which role the device is performing for a particular Connection Handle. The Connection_Handle must be a Connection_Handle for an ACL connection.

Command Parameters:

Connection_Handle: *Size: 2 Octets (12 Bits meaningful)*

Value	Parameter Description
0xXXXX	Connection Handle to be used to identify a connection. Range: 0x0000-0x0EFF (0x0F00 - 0x0FFF Reserved for future use)

Return Parameters:

Status: *Size: 1 Octet*

Value	Parameter Description
0x00	Role_Discovery command succeeded,
0x01-0xFF	Role_Discovery command failed. See "Error Codes" on page 291 [Part D] for list of Error Codes.

Connection_Handle: *Size: 2 Octets (12 Bits meaningful)*

Value	Parameter Description
0xXXXX	Connection Handle to be used to identify which connection the Role_Discovery command was issued on. Range: 0x0000-0x0EFF (0x0F00 - 0x0FFF Reserved for future use)

Current_Role: *Size: 1 Octet*

Value	Parameter Description
0x00	Current Role is Master for this Connection Handle.
0x01	Current Role is Slave for this Connection Handle.

Event(s) generated (unless masked away):

When the Role_Discovery command has completed, a Command Complete event will be generated.

7.2.8 Switch Role Command

Command	OCF	Command Parameters	Return Parameters
HCI_Switch_Role	0x000B	BD_ADDR, Role	

Description:

The Switch_Role command is used for a Bluetooth device to switch the current role the device is performing for a particular connection with another specified Bluetooth device. The BD_ADDR command parameter indicates for which connection the role switch is to be performed. The Role indicates the requested new role that the local device performs.
Note: the BD_ADDR command parameter must specify a Bluetooth device for which a connection already exists.

Note: If there is an SCO connection between the local device and the device identified by the BD_ADDR parameter, an attempt to perform a role switch shall be rejected by the local device.

]Note: If the connection between the local device and the device identified by the BD_ADDR parameter is placed in Sniff Mode, an attempt to perform a role switch will be rejected by the local device.

Command Parameters:

BD_ADDR: *Size: 6 Octets*

Value	Parameter Description
0xXXXXXXXXXXXX	BD_ADDR for the connected device with which a role switch is to be performed.

Role: *Size: 1 Octet*

Value	Parameter Description
0x00	Change own Role to Master for this BD_ADDR.
0x01	Change own Role to Slave for this BD_ADDR.

Return Parameters:

None.

Event(s) generated (unless masked away):

A Command Status event for this command will occur when the Controller has received the Switch_Role command. When the role switch is performed, a Role Change event will occur to indicate that the roles have been changed, and will be communicated to both Hosts.
Note: no Command Complete event will be sent by the Controller to indicate that this command has been completed. Instead, only the Role Change event will indicate that this command has been completed.

7.2.9 Read Link Policy Settings Command

Command	OCF	Command Parameters	Return Parameters
HCI_Read_Link_Policy_Settings	0x000C	Connection_Handle	Status, Connection_Handle Link_Policy_Settings

Description:

This command will read the Link Policy setting for the specified Connection Handle. The Connection_Handle must be a Connection_Handle for an ACL connection. Section 6.19 on page 365.

Command Parameters:

Connection_Handle: *Size: 2 Octets (12 Bits meaningful)*

Value	Parameter Description
0xXXXX	Connection Handle to be used to identify a connection. Range: 0x0000-0x0EFF (0x0F00 - 0x0FFF Reserved for future use)

Return Parameters:

Status: *Size: 1 Octet*

Value	Parameter Description
0x00	Read_Link_Policy_Settings command succeeded.
0x01-0xFF	Read_Link_Policy_Settings command failed. See "Error Codes" on page 291 [Part D] for list of Error Codes.

Connection_Handle: *Size: 2 Octets (12 Bits meaningful)*

Value	Parameter Description
0xXXXX	Connection Handle to be used to identify a connection. Range: 0x0000-0x0EFF (0x0F00 - 0x0FFF Reserved for future use)

Link_Policy_Settings *Size: 2 Octets*

Value	Parameter Description
0x0000	Disable All LM Modes Default.
0x0001	Enable Role Switch.
0x0002	Enable Hold Mode.
0x0004	Enable Sniff Mode.
0x0008	Enable Park State.
0x0010 – 0x8000	Reserved for Future Use.

Event(s) generated (unless masked away):

When the Read_Link_Policy_Settings command has completed, a Command Complete event will be generated.

7.2.10 Write Link Policy Settings Command

Command	OCF	Command Parameters	Return Parameters
HCI_Write_Link_Policy_Settings	0x000D	Connection_Handle, Link_Policy_Settings	Status, Connection_Handle

Description:

This command will write the Link Policy setting for the specified Connection Handle. The Connection_Handle must be a Connection_Handle for an ACL connection. See Section 6.19 on page 365.

The default value is the value set by the Write Default Link Policy Settings Command.

Command Parameters:

Connection_Handle: *Size: 2 Octets (12 Bits meaningful)*

Value	Parameter Description
0xXXXX	Connection Handle to be used to identify a connection. Range: 0x0000-0x0EFF (0x0F00 - 0x0FFF Reserved for future use)

Link_Policy_Settings *Size: 2 Octets*

Value	Parameter Description
0x0000	Disable All LM Modes.
0x0001	Enable Role Switch.
0x0002	Enable Hold Mode.
0x0004	Enable Sniff Mode.
0x0008	Enable Park State.
0x0010 – 0x8000	Reserved for Future Use.

Return Parameters:

Status: *Size: 1 Octet*

Value	Parameter Description
0x00	Write_Link_Policy_Settings command succeeded.
0x01-0xFF	Write_Link_Policy_Settings command failed. See "Error Codes" on page 291 [Part D] for error codes and description.

Connection_Handle: *Size: 2 Octets (12 Bits meaningful)*

Value	Parameter Description
0xXXXX	Connection Handle to be used to identify a connection. Range: 0x0000-0x0EFF (0x0F00 - 0x0FFF Reserved for future use)

Event(s) generated (unless masked away):

When the Write_Link_Policy_Settings command has completed, a Command Complete event will be generated.

7.2.11 Read Default Link Policy Settings Command

Command	OCF	Command Parameters	Return Parameters
HCI_Read_Default_Link _Policy_Settings	0x000E		Status, Default_Link_Policy_Settings

Description:

This command will read the Default Link Policy setting for all new connections.

Note: Please refer to the Link Policy Settings configuration parameter for more information. See Section 6.19 on page 365.

Command Parameters:

None

Return Parameters:

Status: *Size: 1 Octet*

Value	Parameter Description
0x00	Read_Link_Policy_Settings command succeeded
0x01-0xFF	Read_Link_Policy_Settings command failed. See "Error Codes" on page 291 [Part D] for list of Error Codes.

Default_Link_Policy_Settings *Size: 2 Octets*

Value	Parameter Description
0x0000	Disable All LM Modes Default
0x0001	Enable Role Switch
0x0002	Enable Hold Mode
0x0004	Enable Sniff Mode
0x0008	Enable Park State
0x0010 - 0x8000	Reserved for future use.

Event(s) generated (unless masked away):

When the Read_Default_Link_Policy_Settings command has completed, a Command Complete event will be generated.

7.2.12 Write Default Link Policy Settings Command

Command	OCF	Command Parameters	Return Parameters
HCI_Write_Default_Link _Policy_Settings	0x000F	Default_Link_Policy _Settings	Status

Description:

This command will write the Default Link Policy configuration value. The Default_Link_Policy_Settings parameter determines the initial value of the Link_Policy_Settings for all new connections.

Note: Please refer to the Link Policy Settings configuration parameter for more information. See Section 6.19 on page 365.

Command Parameters:

Default_Link_Policy_Settings *Size: 2 Octets*

Value	Parameter Description
0x0000	Disable All LM Modes Default
0x0001	Enable Role Switch
0x0002	Enable Hold Mode
0x0004	Enable Sniff Mode
0x0008	Enable Park State
0x0010 - 0x8000	Reserved for future use.

Return Parameters:

Status: *Size: 1 Octet*

Value	Parameter Description
0x00	Write_Link_Policy_Settings command succeeded
0x01-0xFF	Write_Link_Policy_Settings command failed. See "Error Codes" on page 291 [Part D] for list of Error Codes.

Event(s) generated (unless masked away):

When the Write_Default_Link_Policy_Settings command has completed, a Command Complete event will be generated.

7.2.13 Flow Specification Command

Command	OCF	Command Parameters	Return Parameters
HCI_Flow_Specification	0x0010	Connection_Handle, Flags, Flow_direction, Service_Type, Token_Rate, Token_Bucket_Size, Peak_Bandwidth, Access Latency	

Description:

The Flow_Specification command is used to specify the flow parameters for the traffic carried over the ACL connection identified by the Connection_Handle. The Connection_Handle must be a Connection_Handle for an ACL connection. The Connection_Handle command parameter is used to identify for which connection the Flow Specification is requested. The flow parameters refer to the outgoing or incoming traffic of the ACL link, as indicated by the Flow_direction field. The Flow Specification command allows the Link Manager to have the parameters of the outgoing as well as the incoming flow for the ACL connection. The flow parameters are defined in the L2CAP specification "Quality of Service (QoS) Option" on page 60[vol. 3]. The Link Manager will determine if the flow parameters can be supported. Bluetooth devices that are both master and slave can use this command.

Command Parameters:

Connection_Handle: *Size: 2 Octets (12 Bits meaningful)*

Value	Parameter Description
0xXXXX	Connection Handle used to identify for which ACL connection the Flow is specified. Range: 0x0000 - 0x0EFF (0x0F00 – 0x0FFF Reserved for future use)

Flags: *Size: 1 Octet*

Value	Parameter Description
0x00 – 0xFF	Reserved for Future Use.

Flow_direction: *Size: 1 Octet*

Value	Parameter Description
0x00	Outgoing Flow i.e. traffic send over the ACL connection
0x01	Incoming Flow i.e. traffic received over the ACL connection
0x02 – 0xFF	Reserved for Future Use.

Service_Type: *Size: 1 Octet*

Value	Parameter Description
0x00	No Traffic
0x01	Best Effort
0x02	Guaranteed
0x03 – 0xFF	Reserved for Future Use

Token Rate: *Size: 4 Octets*

Value	Parameter Description
0xXXXXXXXX	Token Rate in octets per second

Token Bucket Size: *Size: 4 Octets*

Value	Parameter Description
0xXXXXXXXX	Token Bucket Size in octets

Peak_Bandwidth: *Size: 4 Octets*

Value	Parameter Description
0xXXXXXXXX	Peak Bandwidth in octets per second

Access Latency: *Size: 4 Octets*

Value	Parameter Description
0xXXXXXXXX	Latency in microseconds

Return Parameters:

None.

Event(s) generated (unless masked away):

When the Controller receives the Flow Specification command, the Controller sends the Command Status event to the Host. When the Link Manager has determined if the Flow specification can be supported, the Controller on the local Bluetooth device sends a Flow Specification Complete event to the Host. The Flow Specification Complete event returned by the Controller on the local side contains the status of this command, and returned Flow parameters describing the supported QoS for the ACL connection.

Note: No Command Complete event will be sent by the Controller to indicate that this command has been completed. Instead, the Flow Specification Complete event will indicate that this command has been completed.

7.3 CONTROLLER & BASEBAND COMMANDS

The Controller & Baseband Commands provide access and control to various capabilities of the Bluetooth hardware. These parameters provide control of Bluetooth devices and of the capabilities of the Controller, Link Manager, and Baseband. The host device can use these commands to modify the behavior of the local device. For the HCI Control and Baseband Commands, the OGF is defined as 0x03.

7.3.1 Set Event Mask Command

Command	OCF	Command Parameters	Return Parameters
HCI_Set_Event_Mask	0x0001	Event_Mask	Status

Description:

The Set_Event_Mask command is used to control which events are generated by the HCI for the Host. If the bit in the Event_Mask is set to a one, then the event associated with that bit will be enabled. The Host has to deal with each event that occurs by the Bluetooth devices. The event mask allows the Host to control how much it is interrupted.

Command Parameters:

Event_Mask: *Size: 8 Octets*

Value	Parameter Description
0x0000000000000000	No events specified
0x0000000000000001	Inquiry Complete Event
0x0000000000000002	Inquiry Result Event
0x0000000000000004	Connection Complete Event
0x0000000000000008	Connection Request Event
0x0000000000000010	Disconnection Complete Event
0x0000000000000020	Authentication Complete Event
0x0000000000000040	Remote Name Request Complete Event
0x0000000000000080	Encryption Change Event
0x0000000000000100	Change Connection Link Key Complete Event
0x0000000000000200	Master Link Key Complete Event
0x0000000000000400	Read Remote Supported Features Complete Event
0x0000000000000800	Read Remote Version Information Complete Event
0x0000000000001000	QoS Setup Complete Event
0x0000000000002000	Reserved
0x0000000000004000	Reserved
0x0000000000008000	Hardware Error Event

Value	Parameter Description
0x0000000000010000	Flush Occurred Event
0x0000000000020000	Role Change Event
0x0000000000040000	Reserved
0x0000000000080000	Mode Change Event
0x0000000000100000	Return Link Keys Event
0x0000000000200000	PIN Code Request Event
0x0000000000400000	Link Key Request Event
0x0000000000800000	Link Key Notification Event
0x0000000001000000	Loopback Command Event
0x0000000002000000	Data Buffer Overflow Event
0x0000000004000000	Max Slots Change Event
0x0000000008000000	Read Clock Offset Complete Event
0x0000000010000000	Connection Packet Type Changed Event
0x0000000020000000	QoS Violation Event
0x0000000040000000	Page Scan Mode Change Event [deprecated]
0x0000000080000000	Page Scan Repetition Mode Change Event
0x0000000100000000	Flow Specification Complete Event
0x0000000200000000	Inquiry Result with RSSI Event
0x0000000400000000	Read Remote Extended Features Complete Event
0x0000000800000000	Reserved
0x0000001000000000	Reserved
0x0000002000000000	Reserved
0x0000004000000000	Reserved
0x0000008000000000	Reserved
0x0000010000000000	Reserved
0x0000020000000000	Reserved
0x0000040000000000	Reserved
0x0000080000000000	Synchronous Connection Complete Event
0x0000100000000000	Synchronous Connection Changed event
0xFFFFE00000000000	Reserved for future use
0x00001FFFFFFFFFFF	**Default** (All events enabled)

Return Parameters:

Status: *Size: 1 Octet*

Value	Parameter Description
0x00	Set_Event_Mask command succeeded.
0x01-0xFF	Set_Event_Mask command failed. See "Error Codes" on page 291 [Part D] for error codes and description.

Event(s) generated (unless masked away):

When the Set_Event_Mask command has completed, a Command Complete event will be generated.

7.3.2 Reset Command

Command	OCF	Command Parameters	Return Parameters
HCI_Reset	0x0003		Status

Description:

The Reset command will reset the Controller and the Link Manager. The reset command shall not affect the used HCI transport layer since the HCI transport layers may have reset mechanisms of their own. After the reset is completed, the current operational state will be lost, the Bluetooth device will enter standby mode and the Controller will automatically revert to the default values for the parameters for which default values are defined in the specification.

Note: the Host is not allowed to send additional HCI commands before the Command Complete event related to the Reset command has been received.

Command Parameters:

None.

Return Parameters:

Status: *Size: 1 Octet*

Value	Parameter Description
0x00	Reset command succeeded, was received and will be executed.
0x01-0xFF	Reset command failed. See "Error Codes" on page 291 [Part D] for list of Error Codes.

Event(s) generated (unless masked away):

When the reset has been performed, a Command Complete event will be generated.

7.3.3 Set Event Filter Command

Command	OCF	Command Parameters	Return Parameters
HCI_Set_Event_Filter	0x0005	Filter_Type, Filter_Condition_Type, Condition	Status

Description:

The Set_Event_Filter command is used by the Host to specify different event filters. The Host may issue this command multiple times to request various conditions for the same type of event filter and for different types of event filters. The event filters are used by the Host to specify items of interest, which allow the Controller to send only events which interest the Host. Only some of the events have event filters. By default (before this command has been issued after power-on or Reset) no filters are set, and the Auto_Accept_Flag is off (incoming connections are not automatically accepted). An event filter is added each time this command is sent from the Host and the Filter_Condition_Type is not equal to 0x00. (The old event filters will not be overwritten). To clear all event filters, the Filter_Type = 0x00 is used. The Auto_Accept_Flag will then be set to off. To clear event filters for only a certain Filter_Type, the Filter_Condition_Type = 0x00 is used.

The Inquiry Result filter allows the Controller to filter out Inquiry Result events. The Inquiry Result filter allows the Host to specify that the Controller only sends Inquiry Results to the Host if the Inquiry Result event meets one of the specified conditions set by the Host. For the Inquiry Result filter, the Host can specify one or more of the following Filter Condition Types:

1. Return responses from all devices during the Inquiry process
2. A device with a specific Class of Device responded to the Inquiry process
3. A device with a specific BD_ADDR responded to the Inquiry process

The Inquiry Result filter is used in conjunction with the Inquiry and Periodic Inquiry command.

The Connection Setup filter allows the Host to specify that the Controller only sends a Connection Complete or Connection Request event to the Host if the event meets one of the specified conditions set by the Host. For the Connection Setup filter, the Host can specify one or more of the following Filter Condition Types:

1. Allow Connections from all devices
2. Allow Connections from a device with a specific Class of Device
3. Allow Connections from a device with a specific BD_ADDR

For each of these conditions, an Auto_Accept_Flag parameter allows the Host to specify what action should be done when the condition is met. The Auto_Accept_Flag allows the Host to specify if the incoming connection should be auto accepted (in which case the Controller will send the Connection Complete event to the Host when the connection is completed) or if the Host should make the decision (in which case the Controller will send the Connection Request event to the Host, to elicit a decision on the connection).

The Connection Setup filter is used in conjunction with the Read/Write_Scan_Enable commands. If the local device is in the process of a page scan, and is paged by another device which meets one on the conditions set by the Host, and the Auto_Accept_Flag is off for this device, then a Connection Request event will be sent to the Host by the Controller. A Connection Complete event will be sent later on after the Host has responded to the incoming connection attempt. In this same example, if the Auto_Accept_Flag is on, then a Connection Complete event will be sent to the Host by the Controller. (No Connection Request event will be sent in that case.)

The Controller will store these filters in volatile memory until the Host clears the event filters using the Set_Event_Filter command or until the Reset command is issued. The number of event filters the Controller can store is implementation dependent. If the Host tries to set more filters than the Controller can store, the Controller will return the *Memory Full* error code and the filter will not be installed.
Note: the Clear All Filters has no Filter Condition Types or Conditions.
Note: In the condition that a connection is auto accepted, a Link Key Request event and possibly also a PIN Code Request event and a Link Key Notification event could be sent to the Host by the Controller before the Connection Complete event is sent.

If there is a contradiction between event filters, the latest set event filter will override older ones. An example is an incoming connection attempt where more than one Connection Setup filter matches the incoming connection attempt, but the Auto-Accept_Flag has different values in the different filters.

Command Parameters:

Filter_Type: *Size: 1 Octet*

Value	Parameter Description
0x00	Clear All Filters (Note: In this case, the Filter_Condition_type and Condition parameters should not be given, they should have a length of 0 octets. Filter_Type should be the only parameter.)
0x01	Inquiry Result.
0x02	Connection Setup.
0x03-0xFF	Reserved for Future Use.

Filter Condition Types: For each Filter Type one or more Filter Condition types exists.

Inquiry_Result_Filter_Condition_Type: *Size: 1 Octet*

Value	Parameter Description
0x00	Return responses from all devices during the Inquiry process. (Note: A device may be reported to the Host in an Inquiry Result event more than once during an inquiry or inquiry period depending on the implementation, see description in Section 7.1.1 on page 373 and Section 7.1.3 on page 376)
0x01	A device with a specific Class of Device responded to the Inquiry process.
0x02	A device with a specific BD_ADDR responded to the Inquiry process.
0x03-0xFF	Reserved for Future Use

Connection_Setup_Filter_Condition_Type: *Size: 1 Octet*

Value	Parameter Description
0x00	Allow Connections from all devices.
0x01	Allow Connections from a device with a specific Class of Device.
0x02	Allow Connections from a device with a specific BD_ADDR.
0x03-0xFF	Reserved for Future Use.

Condition: For each Filter Condition Type defined for the Inquiry Result Filter and the Connection Setup Filter, zero or more Condition parameters are required – depending on the filter condition type and filter type.

Condition for Inquiry_Result_Filter_Condition_Type = 0x00

Condition: *Size: 0 Octet*

Value	Parameter Description
	The Condition parameter is not used.

Condition for Inquiry_Result_Filter_Condition_Type = 0x01

Condition:

Size: 6 Octets

Class_of_Device: *Size: 3 Octets*

Value	Parameter Description
0x000000	Default, Return All Devices.
0xXXXXXX	*Class of Device* of Interest.

Class_of_Device_Mask: *Size: 3 Octets*

Value	Parameter Description
0xXXXXXX	Bit Mask used to determine which bits of the Class of Device parameter are ‘don’t care’. Zero-value bits in the mask indicate the ‘don’t care’ bits of the Class of Device.

Condition for Inquiry_Result_Filter_Condition_Type = 0x02

Condition:

Size: 6 Octets

BD_ADDR: *Size: 6 Octets*

Value	Parameter Description
0xXXXXXXXXXXXX	BD_ADDR of the Device of Interest

Condition for Connection_Setup_Filter_Condition_Type = 0x00

Condition:

Size: 1 Octet

Auto_Accept_Flag: *Size:1 Octet*

Value	Parameter Description
0x01	Do NOT Auto accept the connection. (Auto accept is off)
0x02	Do Auto accept the connection with role switch disabled. (Auto accept is on).
0x03	Do Auto accept the connection with role switch enabled. (Auto accept is on). Note: When auto accepting an incoming synchronous connection, no role switch will be performed. The value 0x03 of the Auto_Accept_Flag will then get the same effect as if the value had been 0x02.
0x04 – 0xFF	Reserved for future use.

Condition for Connection_Setup_Filter_Condition_Type = 0x01

Condition:

Size: 7 Octets

Class_of_Device: *Size: 3 Octets*

Value	Parameter Description
0x000000	Default, Return All Devices.
0xXXXXXX	*Class of Device* of Interest.

Class_of_Device_Mask: *Size: 3 Octets*

Value	Parameter Description
0xXXXXXX	Bit Mask used to determine which bits of the Class of Device parameter are 'don't care'. Zero-value bits in the mask indicate the 'don't care' bits of the Class of Device. Note: For an incoming SCO connection, if the class of device is unknown then the connection will be accepted.

Auto_Accept_Flag: *Size: 1 Octet*

Value	Parameter Description
0x01	Do NOT Auto accept the connection. (Auto accept is off)
0x02	Do Auto accept the connection with role switch disabled. (Auto accept is on).
0x03	Do Auto accept the connection with role switch enabled. (Auto accept is on). Note: When auto accepting an incoming synchronous connection, no role switch will be performed. The value 0x03 of the Auto_Accept_Flag will then get the same effect as if the value had been 0x02.
0x04 – 0xFF	Reserved for future use.

Condition for Connection_Setup_Filter_Condition_Type = 0x02

Condition:

Size: 7 Octets

BD_ADDR: *Size: 6 Octets*

Value	Parameter Description
0xXXXXXXXXXXXX	BD_ADDR of the Device of Interest.

Auto_Accept_Flag: *Size: 1 Octet*

Value	Parameter Description
0x01	Do NOT Auto accept the connection. (Auto accept is off)
0x02	Do Auto accept the connection with role switch disabled. (Auto accept is on).
0x03	Do Auto accept the connection with role switch enabled. (Auto accept is on). **Note: When auto accepting an incoming synchronous connection, no role switch will be performed. The value 0x03 of the Auto_Accept_Flag will then get the same effect as if the value had been 0x02**.
0x04 – 0xFF	Reserved for future use.

Return Parameters:

Status: *Size: 1 Octet*

Value	Parameter Description
0x00	Set_Event_Filter command succeeded.
0x01-0xFF	Set_Event_Filter command failed. See "Error Codes" on page 291 [Part D] for list of Error Codes.

Event(s) generated (unless masked away):

A Command Complete event for this command will occur when the Controller has enabled the filtering of events. When one of the conditions are met, a specific event will occur.

7.3.4 Flush Command

Command	OCF	Command Parameters	Return Parameters
HCI_Flush	0x0008	Connection_Handle	Status, Connection_Handle

Description:

The Flush command is used to discard all data that is currently pending for transmission in the Controller for the specified connection handle, even if there currently are chunks of data that belong to more than one L2CAP packet in the Controller. After this, all data that is sent to the Controller for the same connection handle will be discarded by the Controller until an HCI Data Packet with the start Packet_Boundary_Flag (0x02) is received. When this happens, a new transmission attempt can be made. This command will allow higher-level software to control how long the baseband should try to retransmit a baseband packet for a connection handle before all data that is currently pending for transmission in the Controller should be flushed. Note that the Flush command

is used for ACL connections ONLY. In addition to the Flush command, the automatic flush timers (see section 7.3.31 on page 478) can be used to automatically flush the L2CAP packet that is currently being transmitted after the specified flush timer has expired.

Command Parameters:

Connection_Handle: *Size: 2 Octets (12 Bits meaningful)*

Value	Parameter Description
0xXXXX	Connection Handle to be used to identify which connection to flush. Range: 0x0000-0x0EFF (0x0F00 - 0x0FFF Reserved for future use)

Return Parameters:

Status: *Size: 1 Octet*

Value	Parameter Description
0x00	Flush command succeeded.
0x01-0xFF	Flush command failed. See "Error Codes" on page 291 [Part D] for list of Error Codes.

Connection_Handle: *Size: 2 Octets (12 Bits meaningful)*

Value	Parameter Description
0xXXXX	Connection Handle to be used to identify which connection the flush command was issued on. Range: 0x0000-0x0EFF (0x0F00 - 0x0FFF Reserved for future use)

Event(s) generated (unless masked away):

The Flush Occurred event will occur once the flush is completed. A Flush Occurred event could be from an automatic Flush or could be cause by the Host issuing the Flush command. When the Flush command has completed, a Command Complete event will be generated, to indicate that the Host caused the Flush.

7.3.5 Read PIN Type Command

Command	OCF	Command Parameters	Return Parameters
HCI_Read_PIN_Type	0x0009		Status, PIN_Type

Description:

The Read PIN Type command is used to read the PIN_Type configuration parameter. See Section 6.13 on page 362.

Command Parameters:

None.

Return Parameters:

Status: *Size: 1 Octet*

Value	Parameter Description
0x00	Read_PIN_Type command succeeded.
0x01-0xFF	Read_PIN_Type command failed. See "Error Codes" on page 291 [Part D] for list of Error Codes.

PIN_Type: *Size: 1 Octet*

Value	Parameter Description
0x00	Variable PIN.
0x01	Fixed PIN.

Event(s) generated (unless masked away):

When the Read_PIN_Type command has completed, a Command Complete event will be generated.

7.3.6 Write PIN Type Command

Command	OCF	Command Parameters	Return Parameters
HCI_Write_PIN_Type	0x000A	PIN_Type	Status

Description:

The Write_PIN_Type command is used to write the PIN Type configuration paramter. See Section 6.13 on page 362.

Command Parameters:

PIN_Type: *Size: 1 Octet*

Value	Parameter Description
0x00	Variable PIN.
0x01	Fixed PIN.

Return Parameters:

Status: *Size: 1 Octet*

Value	Parameter Description
0x00	Write PIN Type command succeeded.
0x01-0xFF	Write PIN Type command failed. See "Error Codes" on page 291 [Part D] for list of Error Codes.

Event(s) generated (unless masked away):

When the Write_PIN_Type command has completed, a Command Complete event will be generated.

7.3.7 Create New Unit Key Command

Command	OCF	Command Parameters	Return Parameters
HCI_Create_New_Unit_Key	0x000B		Status

Description:

The Create_New_Unit_Key command is used to create a new unit key. The Bluetooth hardware will generate a random seed that will be used to generate the new unit key. All new connection will use the new unit key, but the old unit key will still be used for all current connections.
Note: this command will not have any effect for a device which doesn't use unit keys (i.e. a device which uses only combination keys).

Command Parameters:

None.

Return Parameters:

Status: *Size: 1 Octet*

Value	Parameter Description
0x00	Create New Unit Key command succeeded.
0x01-0xFF	Create New Unit Key command failed. See "Error Codes" on page 291 [Part D] for list of Error Codes.

Event(s) generated (unless masked away):

When the Create_New_Unit_Key command has completed, a Command Complete event will be generated.

7.3.8 Read Stored Link Key Command

Command	OCF	Command Parameters	Return Parameters
HCI_Read_Stored_ Link_Key	0x000D	BD_ADDR, Read_All_Flag	Status, Max_Num_Keys, Num_Keys_Read

Description:

The Read_Stored_Link_Key command provides the ability to read one or more link keys stored in the Bluetooth Controller. The Bluetooth Controller can store a limited number of link keys for other Bluetooth devices. Link keys are shared between two Bluetooth devices, and are used for all security transactions between the two devices. A Host device may have additional storage capabilities, which can be used to save additional link keys to be reloaded to the Bluetooth Controller when needed. The Read_All_Flag parameter is used to indicate if all of the stored Link Keys should be returned. If Read_All_Flag indicates that all Link Keys are to be returned, then the BD_ADDR command parameter must be ignored The BD_ADDR command parameter is used to identify which link key to read. The stored Link Keys are returned by one or more Return Link Keys events. See Section 6.14 on page 362.

Command Parameters:

BD_ADDR: *Size: 6 Octets*

Value	Parameter Description
0xXXXXXXXXXXXX	BD_ADDR for the stored link key to be read.

Read_All_Flag: *Size: 1 Octet*

Value	Parameter Description
0x00	Return Link Key for specified BD_ADDR.
0x01	Return all stored Link Keys.
0x02-0xFF	Reserved for future use.

Return Parameters:

Status: *Size: 1 Octet*

Value	Parameter Description
0x00	Read_Stored_Link_Key command succeeded.
0x01-0xFF	Read_Stored_Link_Key command failed.See “Error Codes” on page 291 [Part D] for error codes and description.

Max_Num_Keys: *Size: 2 Octets*

Value	Parameter Description
0xXXXX	Total Number of Link Keys that the Controller can store. Range: 0x0000 – 0xFFFF

Num_Keys_Read: *Size: 2 Octets*

Value	Parameter Description
0xXXXX	Number of Link Keys Read. Range: 0x0000 – 0xFFFF

Event(s) generated (unless masked away):

Zero or more instances of the Return Link Keys event will occur after the command is issued. When there are no link keys stored, no Return Link Keys events will be returned. When there are link keys stored, the number of link keys returned in each Return Link Keys event is implementation specific. When the Read Stored Link Key command has completed a Command Complete event will be generated.

7.3.9 Write Stored Link Key Command

Command	OCF	Command Parameters	Return Parameters
HCI_Write_Stored_Link_Key	0x0011	Num_Keys_To_Write, *BD_ADDR*[i], Link_Key[i]	Status, Num_Keys_Written

Description:

The Write_Stored_Link_Key command provides the ability to write one or more link keys to be stored in the Bluetooth Controller. The Bluetooth Controller can store a limited number of link keys for other Bluetooth devices. If no additional space is available in the Bluetooth Controller then no additional link keys will be stored. If space is limited and if all the link keys to be stored will not fit in the limited space, then the order of the list of link keys without any error will determine which link keys are stored. Link keys at the beginning of the list will be stored first. The Num_Keys_Written parameter will return the number of link keys that were successfully stored. If no additional space is available, then the Host must delete one or more stored link keys before any additional link keys are stored. The link key replacement algorithm is implemented by the Host and not the Controller. Link keys are shared between two Bluetooth devices and are used for all security transactions between the two devices. A Host device may have additional storage capabilities, which can be used to save additional link keys to be reloaded to the

Bluetooth Controller when needed. See Section 6.14 on page 362.
Note: Link Keys are only stored by issuing this command.

Command Parameters:

Num_Keys_To_Write: *Size: 1 Octet*

Value	Parameter Description
0xXX	Number of Link Keys to Write. Range: 0x01 - 0x0B

BD_ADDR [i]: *Size: 6 Octets * Num_Keys_To_Write*

Value	Parameter Description
0xXXXXXXXXXXXX	BD_ADDR for the associated Link Key.

Link_Key: *Size: 16 Octets*

Value	Parameter Description
0xXXXXXXXXXX XXXXXXXXXXX XXXXXXXXXXX	Link Key for an associated BD_ADDR.

Return Parameters:

Status: *Size: 1 Octet*

Value	Parameter Description
0x00	Write_Stored_Link_Key command succeeded.
0x01-0xFF	Write_Stored_Link_Key command failed. See "Error Codes" on page 291 [Part D] for list of Error Codes.

Num_Keys_Written: *Size: 1 Octets*

Value	Parameter Description
0xXX	Number of Link Keys successfully written. Range: 0x00 – 0x0B

Event(s) generated (unless masked away):

When the Write_Stored_Link_Key command has completed, a Command Complete event will be generated.

7.3.10 Delete Stored Link Key Command

Command	OCF	Command Parameters	Return Parameters
HCI_Delete_Stored_ Link_Key	0x0012	BD_ADDR, Delete_All_Flag	Status, Num_Keys_Deleted

Description:

The Delete_Stored_Link_Key command provides the ability to remove one or more of the link keys stored in the Bluetooth Controller. The Bluetooth Controller can store a limited number of link keys for other Bluetooth devices. Link keys are shared between two Bluetooth devices and are used for all security transactions between the two devices. The Delete_All_Flag parameter is used to indicate if all of the stored Link Keys should be deleted. If the Delete_All_Flag indicates that all Link Keys are to be deleted, then the BD_ADDR command parameter must be ignored This command provides the ability to negate all security agreements between two devices. The BD_ADDR command parameter is used to identify which link key to delete. If a link key is currently in use for a connection, then the link key will be deleted when all of the connections are disconnected. See Section 6.14 on page 362.

Command Parameters:

BD_ADDR: *Size: 6 Octets*

Value	Parameter Description
0xXXXXXXXXXXXX	BD_ADDR for the link key to be deleted.

Delete_All_Flag: *Size: 1 Octet*

Value	Parameter Description
0x00	Delete only the Link Key for specified BD_ADDR.
0x01	Delete all stored Link Keys.
0x02-0xFF	Reserved for future use.

Return Parameters:

Status: *Size: 1 Octet*

Value	Parameter Description
0x00	Delete_Stored_Link_Key command succeeded.
0x01-0xFF	Delete_Stored_Link_Key command failed. See "Error Codes" on page 291 [Part D] for error codes and description.

Num_Keys_Deleted: *Size: 2 Octets*

Value	Parameter Description
0xXXXX	Number of Link Keys Deleted

Event(s) generated (unless masked away):

When the Delete_Stored_Link_Key command has completed, a Command Complete event will be generated.

7.3.11 Write Local Name Command

Command	OCF	Command Parameters	Return Parameters
HCI_Write_Local_Name	0x0013	Local Name	Status

Description:

The Write_Local_Name command provides the ability to modify the user-friendly name for the Bluetooth device. See Section 6.24 on page 368.

Command Parameters:

Local Name: *Size: 248 Octets*

Value	Parameter Description
	A UTF-8 encoded User-Friendly Descriptive Name for the device. If the name contained in the parameter is shorter than 248 octets, the end of the name is indicated by a NULL octet (0x00), and the following octets (to fill up 248 octets, which is the length of the parameter) do not have valid values.
	Null terminated Zero length String. **Default.**

Return Parameters:

Status: *Size: 1 Octet*

Value	Parameter Description
0x00	Write_Local_Name command succeeded.
0x01-0xFF	Write_Local_Name command failed. See "Error Codes" on page 291 [Part D] for list of Error Codes.

Event(s) generated (unless masked away):

When the Write_Local_Name command has completed, a Command Complete event will be generated.

7.3.12 Read Local Name Command

Command	OCF	Command Parameters	Return Parameters
HCI_Read_Local_Name	0x0014		Status, Local Name

Description:

The Read_Local_Name command provides the ability to read the stored user-friendly name for the Bluetooth device. See Section 6.24 on page 368.

Command Parameters:

None.

Return Parameters:

Status: *Size: 1 Octet*

Value	Parameter Description
0x00	Read_Local_Name command succeeded
0x01-0xFF	Read_Local_Name command failed see "Error Codes" on page 291 [Part D] for list of Error Codes

Local Name: *Size: 248 Octets*

Value	Parameter Description
	A UTF-8 encoded User Friendly Descriptive Name for the device. If the name contained in the parameter is shorter than 248 octets, the end of the name is indicated by a NULL octet (0x00), and the following octets (to fill up 248 octets, which is the length of the parameter) do not have valid values.

Event(s) generated (unless masked away):

When the Read_Local_Name command has completed a Command Complete event will be generated.

7.3.13 Read Connection Accept Timeout Command

Command	OCF	Command Parameters	Return Parameters
HCI_Read_Connection_ Accept_Timeout	0x0015		Status, Conn_Accept_Timeout

Description:

This command will read the value for the Connection_Accept_Timeout configuration parameter. See Section 6.7 on page 359.

Command Parameters:

None.

Return Parameters:

Status: *Size: 1 Octet*

Value	Parameter Description
0x00	Read_Connection_Accept_Timeout command succeeded.
0x01-0xFF	Read_Connection_Accept_Timeout command failed. See "Error Codes" on page 291 [Part D] for list of Error Codes.

Conn_Accept_Timeout: *Size: 2 Octets*

Value	Parameter Description
N = 0xXXXX	Connection Accept Timeout measured in Number of Baseband slots. Interval Length = N * 0.625 msec (1 Baseband slot) Range for N: 0x0001 – 0xB540 Time Range: 0.625 msec -29 seconds

Event(s) generated (unless masked away):

When the Read_Connection_Timeout command has completed, a Command Complete event will be generated.

7.3.14 Write Connection Accept Timeout Command

Command	OCF	Command Parameters	Return Parameters
HCI_Write_Connection_Accept_Timeout	0x0016	Conn_Accept_Timeout	Status

Description:

This command will write the value for the Connection_Accept_Timeout configuration parameter. See Section 6.7 on page 359.

Command Parameters:

Conn_Accept_Timeout: *Size: 2 Octets*

Value	Parameter Description
N = 0xXXXX	Connection Accept Timeout measured in Number of Baseband slots. Interval Length = N * 0.625 msec (1 Baseband slot) Range for N: 0x0001 – 0xB540 Time Range: 0.625 msec - 29 seconds Default: N = 0x1FA0 Time = 5.06 Sec Mandatory Range for Controller: 0x00A0 to 0xB540

Return Parameters:

Status: *Size: 1 Octet*

Value	Parameter Description
0x00	Write_Connection_Accept_Timeout command succeeded.
0x01-0xFF	Write_Connection_Accept_Timeout command failed. See "Error Codes" on page 291 [Part D] for list of Error Codes.

Event(s) generated (unless masked away):

When the Write_Connection_Accept_Timeout command has completed, a Command Complete event will be generated.

7.3.15 Read Page Timeout Command

Command	OCF	Command Parameters	Return Parameters
HCI_Read_Page_Timeout	0x0017		Status, Page_Timeout

Description:

This command will read the value for the Page_Timeout configuration parameter. See Section 6.6 on page 359.

Command Parameters:

None.

Return Parameters:

Status: *Size: 1 Octet*

Value	Parameter Description
0x00	Read_Page_Timeout command succeeded.
0x01-0xFF	Read_Page_Timeout command failed. See "Error Codes" on page 291 [Part D] for list of Error Codes.

Page_Timeout: *Size: 2 Octets*

Value	Parameter Description
N = 0xXXXX	Page Timeout measured in Number of Baseband slots. Interval Length = N * 0.625 msec (1 Baseband slot) Range for N: 0x0001 – 0xFFFF Time Range: 0.625 msec -40.9 Seconds

Event(s) generated (unless masked away):

When the Read_Page_Timeout command has completed, a Command Complete event will be generated.

7.3.16 Write Page Timeout Command

Command	OCF	Command Parameters	Return Parameters
HCI_Write_Page_Timeout	0x0018	Page_Timeout	Status

Description:

This command will write the value for the Page_Timeout configuration parameter. The Page_Timeout configuration parameter defines the maximum time the local Link Manager will wait for a baseband page response from the remote device at a locally initiated connection attempt. If this time expires and the remote device has not responded to the page at baseband level, the connection attempt will be considered to have failed.

Command Parameters:

Page_Timeout: *Size: 2 Octets*

Value	Parameter Description
0	Illegal Page Timeout. Must be larger than 0.
N = 0xXXXX	Page Timeout measured in Number of Baseband slots. Interval Length = N * 0.625 msec (1 Baseband slot) Range for N: 0x0001 – 0xFFFF Time Range: 0.625 msec -40.9 Seconds **Default: N = 0x2000 Time = 5.12 Sec** Mandatory Range for Controller: 0x0016 to 0xFFFF

Return Parameters:

Status: *Size: 1 Octet*

Value	Parameter Description
0x00	Write_Page_Timeout command succeeded.
0x01-0xFF	Write_Page_Timeout command failed. See "Error Codes" on page 291 [Part D] for list of Error Codes.

Event(s) generated (unless masked away):

When the Write_Page_Timeout command has completed, a Command Complete event will be generated.

7.3.17 Read Scan Enable Command

Command	OCF	Command Parameters	Return Parameters
HCI_Read_Scan_Enable	0x0019		Status, Scan_Enable

Description:

This command will read the value for the Scan_Enable parameter configuration parameter. See Section 6.1 on page 357.

Command Parameters:

None.

Return Parameters:

Status: *Size: 1 Octet*

Value	Parameter Description
0x00	Read_Scan_Enable command succeeded.
0x01-0xFF	Read_Scan_Enable command failed. See "Error Codes" on page 291 [Part D] for list of Error Codes.

Scan_Enable: *Size: 1 Octet*

Value	Parameter Description
0x00	No Scans enabled.
0x01	Inquiry Scan enabled. Page Scan disabled.
0x02	Inquiry Scan disabled. Page Scan enabled.
0x03	Inquiry Scan enabled. Page Scan enabled.
0x04-0xFF	Reserved

Event(s) generated (unless masked away):

When the Read_Scan_Enable command has completed, a Command Complete event will be generated.

7.3.18 Write Scan Enable Command

Command	OCF	Command Parameters	Return Parameters
HCI_Write_Scan_Enable	0x001A	Scan_Enable	Status

Description:

This command will write the value for the Scan_Enable configuration parameter. See Section 6.1 on page 357.

Command Parameters:

Scan_Enable: *Size: 1 Octet*

Value	Parameter Description
0x00	No Scans enabled. **Default.**
0x01	Inquiry Scan enabled. Page Scan disabled.
0x02	Inquiry Scan disabled. Page Scan enabled.
0x03	Inquiry Scan enabled. Page Scan enabled.
0x04-0xFF	Reserved

Return Parameters:

Status: *Size: 1 Octet*

Value	Parameter Description
0x00	Write_Scan_Enable command succeeded.
0x01-0xFF	Write_Scan_Enable command failed. See "Error Codes" on page 291 [Part D] for list of Error Codes.

Event(s) generated (unless masked away):

When the Write_Scan_Enable command has completed, a Command Complete event will be generated.

7.3.19 Read Page Scan Activity Command

Command	OCF	Command Parameters	Return Parameters
HCI_Read_Page_Scan_Activity	0x001B		Status, Page_Scan_Interval, Page_Scan_Window

Description:

This command will read the value for Page_Scan_Interval and Page_Scan_Window configuration parameters. See Section 6.8 on page 360 and Section 6.9 on page 360.
Note: Page Scan is only performed when Page_Scan is enabled (see 6.1, 7.3.17 and 7.3.18).

A changed Page_Scan_Interval could change the local Page_Scan_Repetition_Mode (see "Baseband Specification" on page 45 [Part B], Keyword: SR-Mode).

Command Parameters:

None.

Return Parameters:

Status: *Size: 1 Octet*

Value	Parameter Description
0x00	Read_Page_Scan_Activity command succeeded.
0x01-0xFF	Read_Page_Scan_Activity command failed. See "Error Codes" on page 291 [Part D] for list of Error Codes.

Page_Scan_Interval: *Size: 2 Octets*

Value	Parameter Description
N = 0xXXXX	Size: 2 Octets Range: 0x0012 – 0x1000 Time = N * 0.625 msec Range: 11.25 msec - 2560 msec; only even values are valid

Page_Scan_Window: *Size: 2 Octets*

Value	Parameter Description
N = 0xXXXX	Size: 2 Octets Range: 0x0011 - 0x1000 Time = N * 0.625 msec Range: 10.625 msec - 2560 msec

Event(s) generated (unless masked away):

When the Read_Page_Scan_Activity command has completed, a Command Complete event will be generated.

7.3.20 Write Page Scan Activity Command

Command	OCF	Command Parameters	Return Parameters
HCI_Write_Page_Scan_Activity	0x001C	Page_Scan_Interval, Page_Scan_Window	Status

Description:

This command will write the values for the Page_Scan_Interval and Page_Scan_Window configuration parameters. The Page_Scan_Window shall be less than or equal to the Page_Scan_Interval. See Section 6.8 on page 360 and Section 6.9 on page 360.
Note: Page Scan is only performed when Page_Scan is enabled (see 6.1, 7.3.17 and 7.3.18). A changed Page_Scan_Interval could change the local Page_Scan_Repetition_Mode (see Baseband Specification, Section 8.3.1, on page 134).

Command Parameters:

Page_Scan_Interval: *Size: 2 Octets*

Value	Parameter Description
See Section 6.8 on page 360	

Page_Scan_Window: *Size: 2 Octets*

Value	Parameter Description
See Section 6.9 on page 360	

Return Parameters:

Status: *Size: 1 Octet*

Value	Parameter Description
0x00	Write_Page_Scan_Activity command succeeded.
0x01-0xFF	Write_Page_Scan_Activity command failed. See "Error Codes" on page 291 [Part D] for list of Error Codes.

Event(s) generated (unless masked away):

When the Write_Page_Scan_Activity command has completed, a Command Complete event will be generated.

7.3.21 Read Inquiry Scan Activity Command

Command	OCF	Command Parameters	Return Parameters
HCI_Read_ Inquiry_Scan_Activity	0x001D		Status, Inquiry_Scan_Interval, Inquiry_Scan_Window

Description:

This command will read the value for Inquiry_Scan_Interval and Inquiry_Scan_Window configuration parameter. See Section 6.2 on page 357 and Section 6.3 on page 358.
Note: Inquiry Scan is only performed when Inquiry_Scan is enabled see 6.1, 7.3.17 and 7.3.18).

Command Parameters:

None.

Return Parameters:

Status: *Size: 1 Octet*

Value	Parameter Description
0x00	Read_Inquiry_Scan_Activity command succeeded.
0x01-0xFF	Read_Inquiry_Scan_Activity command failed. See "Error Codes" on page 291 [Part D] for list of Error Codes.

Inquiry_Scan_Interval: *Size: 2 Octets*

Value	Parameter Description
N = 0xXXXX	Size: 2 Octets Range: 0x0012 – 0x1000 Time = N * 0.625 msec Range: 11.25 - 2560 msec; only even values are valid

Inquiry_Scan_Window: *Size: 2 Octets*

Value	Parameter Description
N = 0xXXXX	Size: 2 Octets Range: 0x0011 - 0x1000 Time = N * 0.625 msec Range: 10.625 msec - 2560 msec

Event(s) generated (unless masked away):

When the Read_Inquiry_Scan_Activity command has completed, a Command Complete event will be generated.

7.3.22 Write Inquiry Scan Activity Command

Command	OCF	Command Parameters	Return Parameters
HCI_Write_Inquiry_Scan_Activity	0x001E	Inquiry_Scan_Interval, Inquiry_Scan_Window	Status

Description:

This command will write the values for the Inquiry_Scan_Interval and Inquiry_Scan_Window configuration parameters. The Inquiry_Scan_Window shall be less than or equal to the Inquiry_Scan_Interval. See Section 6.2 on page 357 and Section 6.3 on page 358.
Note: Inquiry Scan is only performed when Inquiry_Scan is enabled (see 6.1, 7.3.17 and 7.3.18).

Command Parameters:

Inquiry_Scan_Interval: *Size: 2 Octets*

Value	Parameter Description
See Section 6.2 on page 357.	

Inquiry_Scan_Window: *Size: 2 Octets*

Value	Parameter Description
See Section 6.3 on page 358.	

Return Parameters:

Status: *Size: 1 Octet*

Value	Parameter Description
0x00	Write_Inquiry_Scan_Activity command succeeded.
0x01-0xFF	Write_Inquiry_Scan_Activity command failed. See "Error Codes" on page 291 [Part D] for list of Error Codes.

Event(s) generated (unless masked away):

When the Write_Inquiry_Scan_Activity command has completed, a Command Complete event will be generated.

7.3.23 Read Authentication Enable Command

Command	OCF	Command Parameters	Return Parameters
HCI_Read_ Authentication_Enable	0x001F		Status, Authentication_Enable

Description:

This command will read the value for the Authentication_Enable configuration parameter. See Section 6.15 on page 362.

Command Parameters:

None.

Return Parameters:

Status: *Size: 1 Octet*

Value	Parameter Description
0x00	Read_Authentication_Enable command succeeded.
0x01-0xFF	Read_Authentication_Enable command failed.See "Error Codes" on page 291 [Part D] for list of Error Codes.

Authentication_Enable: *Size: 1 Octet*

Value	Parameter Description
0x00	Authentication not required.
0x01	Authentication required for all connections.
0x02-0xFF	Reserved

Event(s) generated (unless masked away):

When the Read_Authentication_Enable command has completed, a Command Complete event will be generated.

7.3.24 Write Authentication Enable Command

Command	OCF	Command Parameters	Return Parameters
HCI_Write_ Authentication_Enable	0x0020	Authentication_Enable	Status

Description:

This command will write the value for the Authentication_Enable configuration parameter. See Section 6.15 on page 362.

Command Parameters:

Authentication_Enable: *Size: 1 Octet*

Value	Parameter Description
0x00	Authentication not required. **Default.**
0x01	Authentication required for all connections.
0x02-0xFF	Reserved

Return Parameters:

Status: *Size: 1 Octet*

Value	Parameter Description
0x00	Write Authentication_Enable command succeeded.
0x01-0xFF	Write Authentication_Enable command failed. See "Error Codes" on page 291 [Part D] for list of Error Codes.

Event(s) generated (unless masked away):

When the Write_Authentication_Enable command has completed, a Command Complete event will be generated.

7.3.25 Read Encryption Mode Command

Command	OCF	Command Parameters	Return Parameters
HCI_Read_Encryption_Mode	0x0021		Status, Encryption_Mode

Description:

This command will read the value for the Encryption_Mode configuration parameter. See Section 6.16 on page 363.

Command Parameters:

None.

Return Parameters:

Status: *Size: 1 Octet*

Value	Parameter Description
0x00	Read_Encryption_Mode command succeeded.
0x01-0xFF	Read_Encryption_Mode command failed. See "Error Codes" on page 291 [Part D] for list of Error Codes.

Encryption_Mode: *Size: 1 Octet*

Value	Parameter Description
See Section 6.16 on page 363	

Event(s) generated (unless masked away):

When the Read_Encryption_Mode command has completed, a Command Complete event will be generated.

7.3.26 Write Encryption Mode Command

Command	OCF	Command Parameters	Return Parameters
HCI_Write_Encryption_Mode	0x0022	Encryption_Mode	Status

Description:

This command will write the value for the Encryption_Mode configuration parameter. See Section 6.16 on page 363.

Command Parameters:

Encryption_Mode: *Size: 1 Octet*

Value	Parameter Description
See Section 6.16 on page 363.	

Return Parameters:

Status: *Size: 1 Octet*

Value	Parameter Description
0x00	Write_Encryption_Mode command succeeded.
0x01-0xFF	Write_Encryption_Mode command failed. See "Error Codes" on page 291 [Part D] for list of Error Codes.

Event(s) generated (unless masked away):

When the Write_Encryption_Mode command has completed, a Command Complete event will be generated.

7.3.27 Read Class of Device Command

Command	OCF	Command Parameters	Return Parameters
HCI_Read_Class_of_Device	0x0023		Status, Class_of_Device

Description:

This command will read the value for the Class_of_Device parameter.
See Section 6.25 on page 368.

Command Parameters:

None.

Return Parameters:

Status: *Size: 1 Octet*

Value	Parameter Description
0x00	Read_Class_of_Device command succeeded.
0x01-0xFF	Read_Class_of_Device command failed. See "Error Codes" on page 291 [Part D] for list of Error Codes.

Class_of_Device: *Size: 3 Octets*

Value	Parameter Description
0xXXXXXX	Class of Device for the device.

Event(s) generated (unless masked away):

When the Read_Class_of_Device command has completed, a Command Complete event will be generated.

7.3.28 Write Class of Device Command

Command	OCF	Command Parameters	Return Parameters
HCI_Write_Class_of_Device	0x0024	Class_of_Device	Status

Description:

This command will write the value for the Class_of_Device parameter. See Section 6.25 on page 368.

Command Parameters:

Class_of_Device: *Size: 3 Octets*

Value	Parameter Description
0xXXXXXX	Class of Device for the device.

Return Parameters:

Status: *Size: 1 Octet*

Value	Parameter Description
0x00	Write_Class_of_Device command succeeded.
0x01-0xFF	Write_Class_of_Device command failed. See "Error Codes" on page 291 [Part D] for list of Error Codes.

Event(s) generated (unless masked away):

When the Write_Class_of_Device command has completed, a Command Complete event will be generated.

7.3.29 Read Voice Setting Command

Command	OCF	Command Parameters	Return Parameters
HCI_Read_Voice_Setting	0x0025		Status, Voice_Setting

Description:

This command will read the values for the Voice_Setting configuration parameter. See Section 6.12 on page 361.

Command Parameters:

None.

Return Parameters:

Status: *Size: 1 Octet*

Value	Parameter Description
0x00	Read_Voice_Setting command succeeded.
0x01-0xFF	Read_Voice_Setting command failed. See "Error Codes" on page 291 [Part D] for list of Error Codes.

Voice_Setting: *Size: 2 Octets (10 Bits meaningful)*

Value	Parameter Description
See Section 6.12 on page 361.	

Event(s) generated (unless masked away):

When the Read_Voice_Setting command has completed, a Command Complete event will be generated.

7.3.30 Write Voice Setting Command

Command	OCF	Command Parameters	Return Parameters
HCI_Write_Voice_Setting	0x0026	Voice_Setting	Status

Description:

This command will write the values for the Voice_Setting configuration parameter. See Section 6.12 on page 361.

Command Parameters:

Voice_Setting: *Size: 2 Octets (10 Bits meaningful)*

Value	Parameter Description
See Section 6.12 on page 361.	

Return Parameters:

Status: *Size: 1 Octet*

Value	Parameter Description
0x00	Write_Voice_Setting command succeeded.
0x01-0xFF	Write_Voice_Setting command failed. See "Error Codes" on page 291 [Part D] for list of Error Codes.

Event(s) generated (unless masked away):

When the Write_Voice_Setting command has completed, a Command Complete event will be generated.

7.3.31 Read Automatic Flush Timeout Command

Command	OCF	Command Parameters	Return Parameters
HCI_Read_Automatic_Flush_Timeout	0x0027	Connection_Handle	Status, Connection_Handle, Flush_Timeout

Description:

This command will read the value for the Flush_Timeout parameter for the specified connection handle. See Section 6.20 on page 366.

Command Parameters:

Connection_Handle: *Size: 2 Octets (12 Bits meaningful)*

Value	Parameter Description
0xXXXX	Specifies which Connection Handle's Flush Timeout to read. Range: 0x0000-0x0EFF (0x0F00 - 0x0FFF Reserved for future use)

Return Parameters:

Status: *Size: 1 Octet*

Value	Parameter Description
0x00	Read_Automatic_Flush_Timeout command succeeded.
0x01-0xFF	Read_Automatic_Flush_Timeout command failed. See "Error Codes" on page 291 [Part D] for list of Error Codes.

Connection_Handle: *Size: 2 Octets (12 Bits meaningful)*

Value	Parameter Description
0xXXXX	Specifies which Connection Handle's Flush Timeout has been read. Range: 0x0000-0x0EFF (0x0F00 - 0x0FFF Reserved for future use)

Flush_Timeout: *Size: 2 Octets*

Value	Parameter Description
0	Timeout = ∞; No Automatic Flush
N = 0xXXXX	Flush Timeout = N * 0.625 msec Size: 11 bits Range: 0x0001 – 0x07FF

Event(s) generated (unless masked away):

When the Read_Automatic_Flush_Timeout command has completed, a Command Complete event will be generated.

7.3.32 Write Automatic Flush Timeout Command

Command	OCF	Command Parameters	Return Parameters
HCI_Write_Automatic_Flush_Timeout	0x0028	Connection_Handle, Flush_Timeout	Status, Connection_Handle

Description:

This command will write the value for the Flush_Timeout parameter for the specified connection handle. See Section 6.20 on page 366.

Command Parameters:

Connection_Handle: *Size: 2 Octets (12 Bits meaningful)*

Value	Parameter Description
0xXXXX	Specifies which Connection Handle's Flush Timeout to write to. Range: 0x0000-0x0EFF (0x0F00 - 0x0FFF Reserved for future use)

Flush_Timeout: *Size: 2 Octets*

Value	Parameter Description
0	Timeout = ∞; No Automatic Flush. **Default.**
N = 0xXXXX	Flush Timeout = N * 0.625 msec Size: 11 bits Range: 0x0001 – 0x07FF Mandatory Range for Controller: 0x0002 to 0x07FF

Return Parameters:

Status: *Size: 1 Octet*

Value	Parameter Description
0x00	Write_Automatic_Flush_Timeout command succeeded.
0x01-0xFF	Write_Automatic_Flush_Timeout command failed. See "Error Codes" on page 291 [Part D] for list of Error Codes.

Connection_Handle: *Size: 2 Octets (12 Bits meaningful)*

Value	Parameter Description
0xXXXX	Specifies which Connection Handle's Flush Timeout has been written. Range: 0x0000-0x0EFF (0x0F00 - 0x0FFF Reserved for future use)

Event(s) generated (unless masked away):

When the Write_Automatic_Flush_Timeout command has completed, a Command Complete event will be generated.

7.3.33 Read Num Broadcast Retransmissions Command

Command	OCF	Command Parameters	Return Parameters
HCI_Read_Num_Broadcast_ Retransmissions	0x0029		Status, Num_Broadcast_Retransmissions

Description:

This command will read the device's parameter value for the Number of Broadcast Retransmissions. See Section 6.21 on page 366

Command Parameters:

None.

Return Parameters:

Status: *Size: 1 Octet*

Value	Parameter Description
0x00	Read_Num_Broadcast_Retransmissions command succeeded.
0x01-0xFF	Read_Num_Broadcast_Retransmissions command failed. See "Error Codes" on page 291 [Part D] for list of Error Codes.

Num_Broadcast_Retransmissions: *Size: 1 Octet*

Value	Parameter Description
See Section 6.21 on page 366.	

Event(s) generated (unless masked away):

When the Read_Num_Broadcast_Retransmission command has completed, a Command Complete event will be generated.

7.3.34 Write Num Broadcast Retransmissions Command

Command	OCF	Command Parameters	Return Parameters
HCI_Write_Num_Broadcast_ Retransmissions	0x002A	Num_Broadcast_ Retransmissions	Status

Description:

This command will write the device's parameter value for the Number of Broadcast Retransmissions. See Section 6.21 on page 366.

Command Parameters:

Num_Broadcast_Retransmissions: *Size: 1 Octet*

Value	Parameter Description
See Section 6.21 on page 366.	

Return Parameters:

Status: *Size: 1 Octet*

Value	Parameter Description
0x00	Write_Num_Broadcast_Retransmissions command succeeded.
0x01-0xFF	Write_Num_Broadcast_Retransmissions command failed. See "Error Codes" on page 291 [Part D] for list of Error Codes.

Event(s) generated (unless masked away):

When the Write_Num_Broadcast_Retransmissions command has completed, a Command Complete event will be generated.

7.3.35 Read Hold Mode Activity Command

Command	OCF	Command Parameters	Return Parameters
HCI_Read_Hold_Mode_Activity	0x002B		Status, Hold_Mode_Activity

Description:

This command will read the value for the Hold_Mode_Activity parameter. See Section 6.18 on page 364.

Command Parameters:

None.

Return Parameters:

Status: *Size: 1 Octet*

Value	Parameter Description
0x00	Read_Hold_Mode_Activity command succeeded.
0x01-0xFF	Read_Hold_Mode_Activity command failed. See "Error Codes" on page 291 [Part D] for list of Error Codes.

Hold_Mode_Activity: *Size: 1 Octet*

Value	Parameter Description
0x00	Maintain current Power State.
0x01	Suspend Page Scan.
0x02	Suspend Inquiry Scan.
0x04	Suspend Periodic Inquiries.
0x08-0xFF	Reserved for Future Use.

Event(s) generated (unless masked away):

When the Read_Hold_Mode_Activity command has completed, a Command Complete event will be generated.

7.3.36 Write Hold Mode Activity Command

Command	OCF	Command Parameters	Return Parameters
HCI_Write_Hold_Mode_Activity	0x002C	Hold_Mode_Activity	Status

Description:

This command will write the value for the Hold_Mode_Activity parameter. See Section 6.18 on page 364.

Command Parameters:

Hold_Mode_Activity: *Size: 1 Octet*

Value	Parameter Description
0x00	Maintain current Power State. **Default.**
0x01	Suspend Page Scan.
0x02	Suspend Inquiry Scan.
0x04	Suspend Periodic Inquiries.
0x08-0xFF	Reserved for Future Use.

Return Parameters:

Status: *Size: 1 Octet*

Value	Parameter Description
0x00	Write_Hold_Mode_Activity command succeeded.
0x01-0xFF	Write_Hold_Mode_Activity command failed. See "Error Codes" on page 291 [Part D] for list of Error Codes.

Event(s) generated (unless masked away):

When the Write_Hold_Mode_Activity command has completed, a Command Complete event will be generated.

7.3.37 Read Transmit Power Level Command

Command	OCF	Command Parameters	Return Parameters
HCI_Read_Transmit_ Power_Level	0x002D	Connection_Handle, Type	Status, Connection_Handle, Transmit_Power_Level

Description:

This command will read the values for the Transmit_Power_Level parameter for the specified Connection Handle. The Connection_Handle must be a Connection_Handle for an ACL connection.

Command Parameters:

Connection_Handle: *Size: 2 Octets (12 Bits meaningful)*

Value	Parameter Description
0xXXXX	Specifies which Connection Handle's Transmit Power Level setting to read. Range: 0x0000-0x0EFF (0x0F00 - 0x0FFF Reserved for future use)

Type: *Size: 1 Octet*

Value	Parameter Description
0x00	Read Current Transmit Power Level.
0x01	Read Maximum Transmit Power Level.
0x02-0xFF	Reserved

Return Parameters:

Status: *Size: 1 Octet*

Value	Parameter Description
0x00	Read_Transmit_Power_Level command succeeded.
0x01-0xFF	Read_Transmit_Power_Level command failed. See "Error Codes" on page 291 [Part D] for list of Error Codes.

Connection_Handle: *Size: 2 Octets (12 Bits meaningful)*

Value	Parameter Description
0xXXXX	Specifies which Connection Handle's Transmit Power Level setting is returned. Range: 0x0000-0x0EFF (0x0F00 - 0x0FFF Reserved for future use)

Transmit_Power_Level: *Size: 1 Octet*

Value	Parameter Description
N = 0xXX	Size: 1 Octet (signed integer) Range: -30 ≤ N ≤ 20 Units: dBm

Event(s) generated (unless masked away):

When the Read_Transmit_Power_Level command has completed, a Command Complete event will be generated.

7.3.38 Read Synchronous Flow Control Enable Command

Command	OCF	Command Parameters	Return Parameters
HCI_Read_ Synchronous_Flow_ Control_Enable	0x002E		Status, Synchronous_Flow_ Control_Enable

Description:

The Read_Synchronous_Flow_Control_Enable command provides the ability to read the Synchronous_Flow_Control_Enable setting. See Section 6.23 on page 367.
Note: the Synchronous_Flow_Control_Enable setting can only be changed if no connections exist.

Command Parameters:

None.

Return Parameters:

Status: *Size: 1 Octet*

Value	Parameter Description
0x00	Read_Synchronous_Flow_Control_Enable command succeeded
0x01-0xFF	Read_Synchronous_Flow_Control_Enable command failed see "Error Codes" on page 291 [Part D] for list of Error Codes

Synchronous_Flow_Control_Enable: *Size: 1 Octet*

Value	Parameter Description
0x00	Synchronous Flow Control is disabled. No Number of Completed Packets events will be sent from the Controller for Synchronous Connection Handles.
0x01	Synchronous Flow Control is enabled. Number of Completed Packets events will be sent from the Controller for Synchronous Connection Handles.

Event(s) generated (unless masked away):

When the Read_Synchronous_Flow_Control_Enable command has completed a Command Complete event will be generated.

7.3.39 Write Synchronous Flow Control Enable Command

Command	OCF	Command Parameters	Return Parameters
HCI_Write_Synchronous_Flow_Control_Enable	0x002F	Synchronous_Flow_Control_Enable	Status

Description:

The Write_Synchronous_Flow_Control_Enable command provides the ability to write the Synchronous_Flow_Control_Enable setting. See Section 6.23 on page 367.
Note: the Synchronous_Flow_Control_Enable setting can only be changed if no connections exist.

Command Parameters:

Synchronous_Flow_Control_Enable: *Size: 1 Octet*

Value	Parameter Description
0x00	Synchronous Flow Control is disabled. No Number of Completed Packets events will be sent from the Controller for synchronous Connection Handles. **Default**
0x01	Synchronous Flow Control is enabled. Number of Completed Packets events will be sent from the Controller for synchronous Connection Handles.

Return Parameters:

Status: *Size: 1 Octet*

Value	Parameter Description
0x00	Write_Synchronous_Flow_Control_Enable command succeeded
0x01-0xFF	Write_Synchronous_Flow_Control_Enable command failed see "Error Codes" on page 291 [Part D] for list of Error Codes

Event(s) generated (unless masked away):

When the Write_Synchronous_Flow_Control_Enable command has completed a Command Complete event will be generated.

7.3.40 Set Controller To Host Flow Control Command

Command	OCF	Command Parameters	Return Parameters
HCI_Set_Controller_To_Host_Flow_Control	0x0031	Flow_Control_Enable	Status

Description:

This command is used by the Host to turn flow control on or off for data and/or voice sent in the direction from the Controller to the Host. If flow control is turned off, the Host should not send the Host_Number_Of_Completed_Packets command. That command will be ignored by the Controller if it is sent by the Host and flow control is off. If flow control is turned on for HCI ACL Data Packets and off for HCI synchronous Data Packets, Host_Number_Of_Completed_Packets commands sent by the Host should only contain Connection Handles for ACL connections. If flow control is turned off for HCI ACL Data Packets and on for HCI synchronous Data Packets, Host_Number_Of_Completed_Packets commands sent by the Host should only contain Connection Handles for synchronous connections. If flow control is turned on for HCI ACL Data Packets and HCI synchronous Data Packets, the Host will send Host_Number_Of_Completed_Packets commands both for ACL connections and synchronous connections.

The Flow_Control_Enable setting shall only be changed if no connections exist.

Command Parameters:

Flow_Control_Enable: *Size: 1 Octet*

Value	Parameter Description
0x00	Flow control **off** in direction from Controller to Host. **Default.**
0x01	Flow control **on** for HCI ACL Data Packets and **off** for HCI synchronous Data Packets in direction from Controller to Host.
0x02	Flow control **off** for HCI ACL Data Packets and **on** for HCI synchronous Data Packets in direction from Controller to Host.
0x03	Flow control **on** both for HCI ACL Data Packets and HCI synchronous Data Packets in direction from Controller to Host.
0x04-0xFF	Reserved

Return Parameters:

Status: *Size: 1 Octet*

Value	Parameter Description
0x00	Set_Controller_To_Host_Flow_Control command succeeded.
0x01-0xFF	Set_Controller_To_Host_Flow_Control command failed. See "Error Codes" on page 291 [Part D] for list of Error Codes.

Event(s) generated (unless masked away):

When the Set_Controller_To_Host_Flow_Control command has completed, a Command Complete event will be generated.

7.3.41 Host Buffer Size Command

Command	OCF	Command Parameters	Return Parameters
HCI_Host_Buffer_Size	0x0033	Host_ACL_Data_Packet_Length, Host_Synchronous_Data_Packet_Length, Host_Total_Num_ACL_Data_Packets, Host_Total_Num_Synchronous_Data_Packets	Status

Description:

The Host_Buffer_Size command is used by the Host to notify the Controller about the maximum size of the data portion of HCI ACL and synchronous Data Packets sent from the Controller to the Host. The Controller will segment the data to be transmitted from the Controller to the Host according to these sizes, so that the HCI Data Packets will contain data with up to these sizes. The Host_Buffer_Size command also notifies the Controller about the total number of HCI ACL and synchronous Data Packets that can be stored in the data buffers of the Host. If flow control from the Controller to the Host is turned off, and the Host_Buffer_Size command has not been issued by the Host, this means that the Controller will send HCI Data Packets to the Host with any lengths the Controller wants to use, and it is assumed that the data buffer sizes of the Host are unlimited. If flow control from the Controller to the Host is turned on, the Host_Buffer_Size command must after a power-on or a reset always be sent by the Host before the first Host_Number_Of_Completed_Packets command is sent.

(The Set Controller To Host Flow Control Command command is used to turn flow control on or off.) The Host_ACL_Data_Packet_Length command parameter will be used to determine the size of the L2CAP segments contained in ACL Data Packets, which are transferred from the Controller to the Host. The Host_Synchronous_Data_Packet_Length command parameter is used to determine the maximum size of HCI synchronous Data Packets. Both the Host and the Controller must support command and event packets, where the data portion (excluding header) contained in the packets is 255 octets in size.

The Host_Total_Num_ACL_Data_Packets command parameter contains the total number of HCI ACL Data Packets that can be stored in the data buffers of the Host. The Controller will determine how the buffers are to be divided between different Connection Handles. The Host_Total_Num_Synchronous_Data_Packets command parameter gives the same information for HCI synchronous Data Packets.
Note: the Host_ACL_Data_Packet_Length and Host_Synchronous_Data_Packet_Length command parameters do not include the length of the HCI Data Packet header.

Command Parameters:

Host_ACL_Data_Packet_Length: *Size: 2 Octets*

Value	Parameter Description
0xXXXX	Maximum length (in octets) of the data portion of each HCI ACL Data Packet that the Host is able to accept.

Host_Synchronous_Data_Packet_Length: *Size: 1 Octet*

Value	Parameter Description
0xXX	Maximum length (in octets) of the data portion of each HCI synchronous Data Packet that the Host is able to accept.

Host_Total_Num_ACL_Data_Packets: *Size: 2 Octets*

Value	Parameter Description
0xXXXX	Total number of HCI ACL Data Packets that can be stored in the data buffers of the Host.

Host_Total_Num_Synchronous_Data_Packets: *Size: 2 Octets*

Value	Parameter Description
0xXXXX	Total number of HCI synchronous Data Packets that can be stored in the data buffers of the Host.

Return Parameters:

Status: *Size: 1 Octet*

Value	Parameter Description
0x00	Host_Buffer_Size command succeeded.
0x01-0xFF	Host_Buffer_Size command failed. See "Error Codes" on page 291 [Part D] for list of Error Codes.

Event(s) generated (unless masked away):

When the Host_Buffer_Size command has completed, a Command Complete event will be generated.

7.3.42 Host Number Of Completed Packets Command

Command	OCF	Command Parameters	Return Parameters
HCI_Host_Number_Of_Completed_Packets	0x0035	Number_Of_Handles, Connection_Handle[i], Host_Num_Of_Completed_Packets [i]	

Description:

The Host_Number_Of_Completed_Packets command is used by the Host to indicate to the Controller the number of HCI Data Packets that have been completed for each Connection Handle since the previous Host_Number_Of_Completed_Packetscommand was sent to the Controller. This means that the corresponding buffer space has been freed in the Host. Based on this information, and the Host_Total_Num_ACL_Data_Packets and Host_Total_Num_Synchronous_Data_Packets command parameters of the Host_Buffer_Size command, the Controller can determine for which Connection Handles the following HCI Data Packets should be sent to the Host. The command should only be issued by the Host if flow control in the direction from the Controller to the Host is on and there is at least one connection, or if the Controller is in local loopback mode. Otherwise, the command will be ignored by the Controller. When the Host has completed one or more HCI Data Packet(s) it shall send a Host_Number_Of_Completed_Packets command to the Controller, until it finally reports that all pending HCI Data Packets have been completed. The frequency at which this command is sent is manufacturer specific.

(The Set Controller To Host Flow Control Command command is used to turn flow control on or off.) If flow control from the Controller to the Host is turned on, the Host_Buffer_Size command must after a power-on or a reset always be sent by the Host before the first Host_Number_Of_Completed_Packets command is sent.
Note: the Host_Number_Of_Completed_Packets command is a special command in the sense that no event is normally generated after the command has completed. The command may be sent at any time by the Host when there is at least one connection, or if the Controller is in local loopback mode independent of other commands. The normal flow control for commands is not used for the Host_Number_Of_Completed_Packets command.

Command Parameters:

Number_Of_Handles: *Size: 1 Octet*

Value	Parameter Description
0xXX	The number of Connection Handles and Host_Num_Of_Completed_Packets parameters pairs contained in this command. Range: 0-255

*Connection_Handle[i]: Size: Number_Of_Handles*2 Octets (12 Bits meaningful)*

Value	Parameter Description
0xXXXX	Connection Handle Range: 0x0000-0x0EFF (0x0F00 - 0x0FFF Reserved for future use)

*Host_Num_Of_Completed_Packets [i]: Size: Number_Of_Handles * 2 Octets*

Value	Parameter Description
N = 0xXXXX	The number of HCI Data Packets that have been completed for the associated Connection Handle since the previous time the event was returned. Range for N: 0x0000-0xFFFF

Return Parameters:

None.

Event(s) generated (unless masked away):

Normally, no event is generated after the Host_Number_Of_Completed_Packets command has completed. However, if the Host_Number_Of_Completed_Packets command contains one or more invalid parameters, the Controller will return a Command Complete event with a failure status indicating the *Invalid HCI Command Parameters error code*. The Host may send the Host_Number_Of_Completed_Packets command at any time when there is at least one connection, or if the Controller is in local loopback mode. The normal flow control for commands is not used for this command.

7.3.43 Read Link Supervision Timeout Command

Command	OCF	Command Parameters	Return Parameters
HCI_Read_Link_Supervision_Timeout	0x0036	Connection_Handle	Status, Connection_Handle, Link_Supervision_Timeout

Description:

This command will read the value for the Link_Supervision_Timeout parameter for the device.
Note: the Connection_Handle used for this command must be the ACL connection to the appropriate device. See Section 6.22 on page 367.

Command Parameters:

Connection_Handle: *Size: 2 Octets (12 Bits meaningful)*

Value	Parameter Description
0xXXXX	Specifies which Connection Handle's Link Supervision Timeout value is to be read. Range: 0x0000-0x0EFF (0x0F00 - 0x0FFF Reserved for future use)

Return Parameters:

Status: *Size: 1 Octet*

Value	Parameter Description
0x00	Read_Link_Supervision_Timeout command succeeded.
0x01-0xFF	Read_Link_Supervision_Timeout command failed. See "Error Codes" on page 291 [Part D] for list of Error Codes.

Connection_Handle: *Size: 2 Octets (12 Bits meaningful)*

Value	Parameter Description
0xXXXX	Specifies which Connection Handle's Link Supervision Timeout value was read. Range: 0x0000-0x0EFF (0x0F00 - 0x0FFF Reserved for future use)

Link_Supervision_Timeout: *Size: 2 Octets*

Value	Parameter Description
0x0000	No Link_Supervision_Timeout.
N = 0xXXXX	Measured in Number of Baseband slots Link_Supervision_Timeout = N * 0.625 msec (1 Baseband slot) Range for N: 0x0001 – 0xFFFF Time Range: 0.625ms - 40.9 sec

Event(s) generated (unless masked away):

When the Read_Link_Supervision_Timeout command has completed, a Command Complete event will be generated.

7.3.44 Write Link Supervision Timeout Command

Command	OCF	Command Parameters	Return Parameters
HCI_Write_Link_Supervision_Timeout	0x0037	Connection_Handle, Link_Supervision_Timeout	Status, Connection_Handle

Description:

This command will write the value for the Link_Supervision_Timeout parameter for the device.
Note: the Connection_Handle used for this command must be the ACL connection to the appropriate device. This command will set the Link_Supervision_Timeout values for other Synchronous Connection_Handles to that device.
See Section 6.22 on page 367.

Command Parameters:

Connection_Handle: *Size: 2 Octets (12 Bits meaningful)*

Value	Parameter Description
0xXXXX	Specifies which Connection Handle's Link Supervision Timeout value is to be written. Range: 0x0000-0x0EFF (0x0F00 - 0x0FFF Reserved for future use)

Link_Supervision_Timeout: *Size: 2 Octets*

Value	Parameter Description
0x0000	No Link_Supervision_Timeout.
N = 0xXXXX	Measured in Number of Baseband slots Link_Supervision_Timeout = N*0.625 msec (1 Baseband slot) Range for N: 0x0001 – 0xFFFF Time Range: 0.625ms – 40.9 sec **Default**: N = 0x7D00 Link_Supervision_Timeout = 20 sec Mandatory Range for Controller: 0x0190 to 0xFFFF; plus 0 for infinite timeout

Return Parameters:

Status: *Size: 1 Octet*

Value	Parameter Description
0x00	Write_Link_Supervision_Timeout command succeeded.
0x01-0xFF	Write_Link_Supervision_Timeout command failed. See "Error Codes" on page 291 [Part D] for list of Error Codes.

Connection_Handle: *Size: 2 Octets (12 Bits meaningful)*

Value	Parameter Description
0xXXXX	Specifies which Connection Handle's Link Supervision Timeout value was written. Range: 0x0000-0x0EFF (0x0F00 - 0x0FFF Reserved for future use)

Event(s) generated (unless masked away):

When the Write_Link_Supervision_Timeout command has completed, a Command Complete event will be generated.

7.3.45 Read Number Of Supported IAC Command

Command	OCF	Command Parameters	Return Parameters
HCI_Read_Number_Of_Supported_IAC	0x0038		Status, Num_Support_IAC

Description:

This command will read the value for the number of Inquiry Access Codes (IAC) that the local Bluetooth device can simultaneous listen for during an Inquiry Scan. All Bluetooth devices are required to support at least one IAC, the General Inquiry Access Code (the GIAC). Some Bluetooth devices support additional IACs.

Command Parameters:

None

Return Parameters:

Status: *Size: 1 Octet*

Value	Parameter Description
0x00	Read_Number_Of_Supported_IAC command succeeded.
0x01-0xFF	Read_Number_Of_Supported_IAC command failed. See "Error Codes" on page 291 [Part D] for list of Error Codes.

Num_Support_IAC *Size: 1 Octet*

Value	Parameter Description
0xXX	Specifies the number of Supported IAC that the local Bluetooth device can simultaneous listen for during an Inquiry Scan. Range: 0x01-0x40

Event(s) generated (unless masked away):

When the Read_Number_Of_Supported_IAC command has completed, a Command Complete event will be generated.

7.3.46 Read Current IAC LAP Command

Command	OCF	Command Parameters	Return Parameters
HCI_Read_Current_IAC_LAP	0x0039		Status, Num_Current_IAC, IAC_LAP[i]

Description:

This command reads the LAP(s) used to create the Inquiry Access Codes (IAC) that the local Bluetooth device is simultaneously scanning for during Inquiry Scans. All Bluetooth devices are required to support at least one IAC, the General Inquiry Access Code (the GIAC). Some Bluetooth devices support additional IACs.

Command Parameters:

None

Return Parameters:

Status: *Size: 1 Octet*

Value	Parameter Description
0x00	Read_Current_IAC_LAP command succeeded.
0x01-0xFF	Read_Current_IAC_LAP command failed. See "Error Codes" on page 291 [Part D] for list of Error Codes.

Num_Current_IAC *Size: 1 Octet*

Value	Parameter Description
0xXX	Specifies the number of IACs which are currently in use by the local Bluetooth device to simultaneously listen for during an Inquiry Scan. Range: 0x01-0x40

IAC_LAP[i] *Size: 3 Octets * Num_Current_IAC*

Value	Parameter Description
0xXXXXXX	LAPs used to create the IAC which is currently in use by the local Bluetooth device to simultaneously listen for during an Inquiry Scan. Range: 0x9E8B00-0x9E8B3F

Event(s) generated (unless masked away):

When the Read_Current_IAC_LAP command has completed, a Command Complete event will be generated.

7.3.47 Write Current IAC LAP Command

Command	OCF	Command Parameters	Return Parameters
HCI_Write_Current_IAC_LAP	0x003A	Num_Current_IAC, IAC_LAP[i]	Status

Description:

This command writes the LAP(s) used to create the Inquiry Access Codes (IAC) that the local Bluetooth device is simultaneously scanning for during Inquiry Scans. All Bluetooth devices are required to support at least one IAC, the General Inquiry Access Code (the GIAC). Some Bluetooth devices support additional IACs.

This command shall clear any existing IACs and stores Num_Current_IAC and the IAC_LAPs in to the controller. If Num_Current_IAC is greater than Num_Support_IAC then only the first Num_Support_IACs shall be stored in the controller, and a Command Complete event with error code *Success (0x00)* shall be generated.

Command Parameters:

Num_Current_IAC *Size: 1 Octet*

Value	Parameter Description
0xXX	Specifies the number of IACs which are currently in use by the local Bluetooth device to simultaneously listen for during an Inquiry Scan. Range: 0x01-0x40

IAC_LAP[i] *Size: 3 Octets * Num_Current_IAC*

Value	Parameter Description
0xXXXXXX	LAP(s) used to create IAC which is currently in use by the local Bluetooth device to simultaneously listen for during an Inquiry Scan. Range: 0x9E8B00-0x9E8B3F. The GIAC is the default IAC to be used. If additional IACs are supported, additional default IAC will be determined by the manufacturer.

Return Parameters:

Status: *Size: 1 Octet*

Value	Parameter Description
0x00	Write_Current_IAC_LAP command succeeded.
0x01-0xFF	Write_Current_IAC_LAP command failed. See "Error Codes" on page 291 [Part D] for list of Error Codes.

Event(s) generated (unless masked away):

When the Write_Current_IAC_LAP command has completed, a Command Complete event will be generated.

7.3.48 Read Page Scan Period Mode Command

Command	OCF	Command Parameters	Return Parameters
HCI_Read_Page_Scan_Period_Mode	0x003B		Status, Page_Scan_Period_Mode

Description:

This command is used to read the mandatory Page_Scan_Period_Mode configuration parameter of the local Bluetooth device. See Section 6.10 on page 360.

Command Parameters:

None

Return Parameters:

Status: *Size: 1 Octet*

Value	Parameter Description
0x00	Read_Page_Scan_Period_Mode command succeeded.
0x01-0xFF	Read_Page_Scan_Period_Mode command failed. See "Error Codes" on page 291 [Part D] for list of Error Codes.

Page_Scan_Period_Mode: *Size: 1 Octet*

Value	Parameter Description
0x00	P0
0x01	P1
0x02	P2
0x03-0xFF	Reserved.

Event(s) generated (unless masked away):

When the Read_Page_Scan_Period_Mode command has completed, a Command Complete event will be generated.

7.3.49 Write Page Scan Period Mode Command

Command	OCF	Command Parameters	Return Parameters
HCI_Write_Page_Scan_Period_Mode	0x003C	Page_Scan_Period_Mode	Status

Description:

This command is used to write the mandatory Page_Scan_Period_Mode configuration parameter of the local Bluetooth device. See Section 6.10 on page 360.

Command Parameters:

Page_Scan_Period_Mode: *Size: 1 Octet*

Value	Parameter Description
0x00	P0. **Default.**
0x01	P1
0x02	P2
0x03-0xFF	Reserved.

Return Parameters:

Status: *Size: 1 Octet*

Value	Parameter Description
0x00	Write_Page_Scan_Period_Mode command succeeded.
0x01-0xFF	Write_Page_Scan_Period_Mode command failed. See "Error Codes" on page 291 [Part D] for list of Error Codes.

Event(s) generated (unless masked away):

When the Write_Page_Scan_Period_Mode command has completed, a Command Complete event will be generated.

7.3.50 Set AFH Host Channel Classification Command

Command	OCF	Command Parameters	Return Parameters
Set_AFH_Host_Channel_Classification	0x003F	AFH_Host_Channel_Classification	Status

Description:

The Set_AFH_Host_Channel_Classification command allows the Bluetooth host to specify a channel classification based on its “local information”. This classification persists until overwritten with a subsequent HCI Set_AFH_Host_Channel_Classification command or until the Controller is reset.

This command shall be supported by a device that declares support for any of the AFH_capable_master, AFH_classification_slave or AFH_classification_master features.

If this command is used, then updates should be sent within 10 seconds, of the host knowing that the channel classification has changed. The interval between two successive commands sent shall be at least 1 second.

Command Parameters:

AFH_Host_Channel_Classification: *Size: 10 Octets (79 Bits meaningful)*

Value	Parameter Description
0xXXXXXXXXXXXXXXXXXXXX	This parameter contains 79 1-bit field. The nth such field (in the range 0 to 78) contains the value for channel *n*: Channel *n* is bad = 0 Channel *n* is unknown = 1 The most significant bit is reserved and shall be set to 0 At least N_{min} channels shall be marked as unknown. (See Baseband Specification, Section 2.3.1, on page 63)

Return Parameters:

Status: *Size: 1 Octet*

Value	Parameter Description
0x00	Set_AFH_Host_Channel_Classification command succeeded.
0x01-0xFF	Set_AFH_Host_Channel_Classification command failed. “Error Codes” on page 291 [Part D] for list of Error Codes.

Event(s) generated (unless masked away):

When the Set_AFH_Host_Channel_Classification command has completed, a Command Complete event will be generated.

7.3.51 Read Inquiry Scan Type Command

Command	OCF	Command Parameters	Return Parameters
HCI_Read_Inquiry_Scan_Type	0x0042		Status, Inquiry_Scan_Type

Description:

This command is used to read the Inquiry_Scan_Type configuration parameter of the local Bluetooth device. See Section 6.4 on page 358.
For details, see the Baseband Specification, "Inquiry scan substate" on page 144 [Part B].

Command Parameters:

None

Return Parameters:

Status: *Size: 1 Octet*

Value	Parameter Description
0x00	Read_Inquiry_Scan_Type command succeeded
0x01-0xFF	Read_Inquiry_Scan_Type command failed. See "Error Codes" on page 291 [Part D] for list of Error Codes.

Inquiry_Scan_Type: *Size: 1 Octet*

Value	Parameter Description
0x00	Mandatory: Standard Scan (default)
0x01	Optional: Interlaced Scan
0x02-0xFF	Reserved

Event(s) generated (unless masked away):

When the Read_Inquiry_Scan_Type command has completed, a Command Complete event will be generated.

7.3.52 Write Inquiry Scan Type Command

Command	OCF	Command Parameters	Return Parameters
HCI_Write_Inquiry_Scan_Type	0x0043	Scan_Type	Status

Description:

This command is used to write the Inquiry Scan Type configuration parameter of the local Bluetooth device. See Section 6.4 on page 358.
For details, see the Baseband Specification, "Inquiry scan substate" on page 144 [Part B].

Command Parameters:

Scan_Type: *Size: 1 Octet*

Value	Parameter Description
0x00	Mandatory: Standard Scan (default)
0x01	Optional: Interlaced Scan
0x02-0xFF	Reserved

Return Parameters:

Status: *Size: 1 Octet*

Value	Parameter Description
0x00	Write_Inquiry_Scan_Type command succeeded
0x01-0xFF	Write_Inquiry_Scan_Type command failed. See "Error Codes" on page 291 [Part D] for list of Error Codes.

Event(s) generated (unless masked away):

When the Write_Inquiry_Scan_Type command has completed, a Command Complete event will be generated.

7.3.53 Read Inquiry Mode Command

Command	OCF	Command Parameters	Return Parameters
HCI_Read_Inquiry_Mode	0x0044		Status, Inquiry_Mode

Description:

This command is used to read the Inquiry_Mode configuration parameter of the local Bluetooth device. See Section 6.5 on page 358.

Return Parameters:

Status: *Size: 1 Octet*

Value	Parameter Description
0x00	Read_Inquiry_Mode command succeeded
0x01-0xFF	Read_Inquiry_Mode command failed. See "Error Codes" on page 291 [Part D] for list of Error Codes

Inquiry_Mode: *Size: 1 Octet*

Value	Parameter Description
0x00	Standard Inquiry Result event format
0x01	Inquiry Result format with RSSI
0x02-0xFF	Reserved

Event(s) generated (unless masked away):

When the Read_Inquiry_Mode command has completed, a Command Complete event will be generated.

7.3.54 Write Inquiry Mode Command

Command	OCF	Command Parameters	Return Parameters
HCI_Write_Inquiry_Mode	0x0045	Inquiry_Mode	Status

Description:

This command is used to write the Inquiry_Mode configuration parameter of the local Bluetooth device. See Section 6.5 on page 358.

Command Parameters:

Inquiry_Mode: *Size: 1 Octet*

Value	Parameter Description
0x00	Standard Inquiry Result event format (default)
0x01	Inquiry Result format with RSSI
0x02-0xFF	Reserved

Return Parameters:

Status: *Size: 1 Octet*

Value	Parameter Description
0x00	Write_Inquiry_Mode command succeeded
0x01-0xFF	Write_Inquiry_Mode command failed. See "Error Codes" on page 291 [Part D] for list of Error Codes.

Event(s) generated (unless masked away):

When the Write_Inquiry_Mode command has completed, a Command Complete event will be generated.

7.3.55 Read Page Scan Type Command

Command	OCF	Command Parameters	Return Parameters
HCI_Read_Page_Scan_Type	0x0046		Status, Page_Scan_Type

Description:

This command is used to read the Page Scan Type configuration parameter of the local Bluetooth device. See Section 6.11 on page 361.
For details, see the Baseband Specification, "Page scan substate" on page 134 [Part B].

Return Parameters:

Status: *Size: 1 Octet*

Value	Parameter Description
0x00	Read_Page_Scan_Type command succeeded
0x01-0xFF	Read_Page_Scan_Type command failed. See "Error Codes" on page 291 [Part D] for list of Error Codes.

Page_Scan_Type: *Size: 1 Octet*

Value	Parameter Description
0x00	Mandatory: Standard Scan (default)
0x01	Optional: Interlaced Scan
0x02-0xFF	Reserved

Event(s) generated (unless masked away):

When the Read_Page_Scan_Type command has completed, a Command Complete event will be generated.

7.3.56 Write Page Scan Type Command

Command	OCF	Command Parameters	Return Parameters
HCI_Write_Page_Scan_Type	0x0047	Page_Scan_Type	Status

Description:

This command is used to write the Page Scan Type configuration parameter of the local Bluetooth device. See Section 6.11 on page 361.
For details, see the Baseband Specification, "Page scan substate" on page 134 [Part B].

Command Parameters:

Page_Scan_Type: *Size: 1 Octet*

Value	Parameter Description
0x00	Mandatory: Standard Scan (default)
0x01	Optional: Interlaced Scan
0x02-0xFF	Reserved

Return Parameters:

Status: *Size: 1 Octet*

Value	Parameter Description
0x00	Write_Page_Scan_Type command succeeded
0x01-0xFF	Write_Page_Scan_Type command failed. See "Error Codes" on page 291 [Part D] for list of Error Codes.

Event(s) generated (unless masked away):

When the Write_Page_Scan_Type command has completed, a Command Complete event will be generated.

7.3.57 Read AFH Channel Assessment Mode Command

Command	OCF	Command Parameters	Return Parameters
Read_AFH_Channel_Assessment_Mode	0x0048		Status, AFH_Channel_Assessment_Mode

Description:

The Read_AFH_Channel_Assessment_Mode command reads the value for the AFH_Channel_Assessment_Mode parameter. The AFH_Channel_Assessment_Mode parameter controls whether the controller's channel assessment scheme is enabled or disabled.

This command shall be supported by a device that declares support for any of the AFH_capable_master, AFH_classification_slave or AFH_classification_master features.

Return Parameters:

Status: *Size: 1 Octet*

Value	Parameter Description
0x00	Read_AFH_Channel_Assessment_Mode command succeeded.
0x01-0xFF	Read_AFH_Channel_Assessment_Mode command failed. See "Error Codes" on page 291 [Part D] for list of Error Codes.

AFH_Channel_Assessment_Mode:: *Size: 1 Octet*

Value	Parameter Description
0x00	Controller channel assessment disabled.
0x01	Controller channel assessment enabled.
0x02-0xFF	Reserved for future use.

Event(s) generated (unless masked away):

When the Read_AFH_Channel_Assessment_Mode command has completed, a Command Complete event will be generated.

7.3.58 Write AFH Channel Assessment Mode Command

Command	OCF	Command Parameters	Return Parameters
Write_AFH_Channel _Assessment_Mode	0x0049	AFH_Channel _Assessment_Mode	Status

Description:

The Write_AFH_Channel_Assessment_Mode command writes the value for the AFH_Channel_Assessment_Mode parameter. The AFH_Channel_Assessment_Mode parameter controls whether the Controller's channel assessment scheme is enabled or disabled.

Disabling channel assessment forces all channels to be unknown in the local classification, but does not affect the AFH_reporting_mode or support for the Set_AFH_Host_Channel_Classification command. A slave in the AFH_reporting_enabled state shall continue to send LMP channel classification messages for any changes to the channel classification caused by either this command (altering the AFH_Channel_Assessment_Mode) or HCI Set_AFH_Host_Channel_Classification command (providing a new channel classification from the Host).

This command shall be supported by a device that declares support for any of the AFH_capable_master, AFH_classification_slave or AFH_classification_master features.

If the AFH_Channel_Assessment_Mode parameter is enabled and the Controller does not support a channel assessment scheme, other than via the Set_AFH_Host_Channel_Classification command, then a Status parameter of 'Channel Assessment Not Supported' should be returned. See "Error Codes" on page 291 [Part D] for list of Error Codes.

If the Controller supports a channel assessment scheme then the default AFH_Channel_Assessment_Mode is enabled, otherwise the default is disabled.

Command Parameters:

AFH_Channel_Assessment_Mode: *Size: 1 Octet*

Value	Parameter Description
0x00	Controller channel assessment disabled.
0x01	Controller channel assessment enabled.
0x02-0xFF	Reserved for future use.

Return Parameters:

Status: *Size: 1 Octet*

Value	Parameter Description
0x00	Write_AFH_Channel_Assessment_Mode command succeeded.
0x01-0xFF	Write_AFH_Channel_Assessment_Mode command failed. See "Error Codes" on page 291 [Part D] for list of Error Codes.

Event(s) generated (unless masked away):

When the Write_AFH_Channel_Assessment_Mode command has completed, a Command Complete event will be generated.

7.4 INFORMATIONAL PARAMETERS

The Informational Parameters are fixed by the manufacturer of the Bluetooth hardware. These parameters provide information about the Bluetooth device and the capabilities of the Controller, Link Manager, and Baseband. The host device cannot modify any of these parameters. For Informational Parameters Commands, the OGF is defined as 0x04.

7.4.1 Read Local Version Information Command

Command	OCF	Command Parameters	Return Parameters
HCI_Read_Local_Version_ Information	0x0001		Status, HCI Version, HCI Revision, LMP Version, Manufacturer_Name, LMP Subversion

Description:

This command will read the values for the version information for the local Bluetooth device.

The HCI Version information defines the version information of the HCI layer. The LMP Version information defines the version of the LMP. The Manufacturer_Name information indicates the manufacturer of the local device.

The HCI Revision and LMP Subversion are implementation dependant.

Command Parameters:

None.

Return Parameters:

Status: *Size: 1 Octet*

Value	Parameter Description
0x00	Read_Local_Version_Information command succeeded.
0x01-0xFF	Read_Local_Version_Information command failed. See “Error Codes” on page 291 [Part D] for list of Error Codes.

HCI_Version: *Size: 1 Octet*

Value	Parameter Description
See https://www.bluetooth.org/foundry/assignnumb/document/assigned_numbers	

HCI_Revision: *Size: 2 Octets*

Value	Parameter Description
0xXXXX	Revision of the Current HCI in the Bluetooth device.

LMP_Version: *Size: 1 Octet*

Value	Parameter Description
0xXX	Version of the Current LMP in the Bluetooth device, See https://www.bluetooth.org/foundry/assignnumb/document/assigned_numbers

Manufacturer_Name: *Size: 2 Octets*

Value	Parameter Description
0xXXXX	Manufacturer Name of the Bluetooth device, See https://www.bluetooth.org/foundry/assignnumb/document/assigned_numbers

LMP_Subversion: *Size: 2 Octets*

Value	Parameter Description
0xXXXX	Subversion of the Current LMP in the Bluetooth device, see Table 5.2 on page 277 in the Link Manager Protocol for assigned values (SubVersNr).

Event(s) generated (unless masked away):

When the Read_Local_Version_Information command has completed, a Command Complete event will be generated.

7.4.2 Read Local Supported Commands Command

Command	OCF	Command Parameters	Return Parameters
HCI_ Read_Local_Supported_Commands	0x0002		Status, Supported Commands

Description:

This command reads the list of HCI commands supported for the local device.

This command will return the Supported Commands configuration parameter. It is implied that if a command is listed as supported, the feature underlying that command is also supported.

See Section 6.26 on page 369 for more information.

Command Parameters:

None.

Return Parameters:

Status: *Size: 1 Octet*

Value	Parameter Description
0	Read Local Supported Commands command succeeded
0x01-0xff	Read Local Supported Commands command failed. See "Error Codes" on page 291 [Part D] for list of Error Codes.

Supported Commands: *Size: 64 Octets*

Value	Parameter Description
	Bit mask for each HCI Command. If a bit is 1, the radio supports the corresponding command and the features required for the command. Unsupported or undefined commands shall be set to 0. See Section 6.26, "Supported Commands," on page 369.

Event(s) generated (unless masked away):

When the Read Local Supported Commands command has completed a Command Complete event will be generated.

7.4.3 Read Local Supported Features Command

Command	OCF	Command Parameters	Return Parameters
HCI_Read_Local_Supported_Features	0x0003		Status, LMP_Features

Description:

This command requests a list of the supported features for the local device. This command will return a list of the LMP features. For details see "Link Manager Protocol" on page 189 [Part C].

Command Parameters:

None.

Return Parameters:

Status: *Size: 1 Octet*

Value	Parameter Description
0x00	Read_Local_Supported_Features command succeeded.
0x01-0xFF	Read_Local_Supported_Features command failed. See "Error Codes" on page 291 [Part D]

LMP_Features: *Size: 8 Octets*

Value	Parameter Description
0xXXXXXXXX XXXXXXXX	Bit Mask List of LMP features. For details see "Link Manager Protocol" on page 189 [Part C]

Event(s) generated (unless masked away):

When the Read_Local_Supported_Features command has completed, a Command Complete event will be generated.

7.4.4 Read Local Extended Features Command

Command	OCF	Command Parameters	Return Parameters
HCI_Read_Local_ Extended_Features	0x0004	Page number	Status, Page number, Maximum Page Number, Extended_LMP_Features

Description:

The HCI_Read_Local_Extended_Features command returns the requested page of the extended LMP features.

Command Parameters:

Page Number: *Size: 1 Octet*

Value	Parameter Description
0x00	Requests the normal LMP features as returned by HCI_Read_Local_Supported_Features
0x01-0xFF	Return the corresponding page of features

Return Parameters:

Status: *Size: 1 Octet*

Value	Parameter Description
0x00	HCI_Read_Local_Extended_Features command succeeded
0x01-0xFF	HCI_Read_Local_Extended_Features command failed. See "Error Codes" on page 291 [Part D] for list of error codes

Page Number: *Size: 1 Octet*

Value	Parameter Description
0x00	The normal LMP features as returned by HCI_Read_Local_Supported_Features
0x01-0xFF	The page number of the features returned

Maximum Page Number: *Size: 1 Octet*

Value	Parameter Description
0x00-0xFF	The highest features page number which contains non-zero bits for the local device

Extended_LMP_Features: *Size: 8 Octets*

Value	Parameter Description
0xFFFFFFFFFFFFFFFF	Bit map of requested page of LMP features. See LMP specification for details

Event(s) generated (unless masked away):

When the Controller receives the HCI_Read_Local_Extended_Features command the Controller sends the Command Complete command to the Host containing the requested information.

7.4.5 Read Buffer Size Command

Command	OCF	Command Parameters	Return Parameters
HCI_Read_Buffer_Size	0x0005		Status, HC_ACL_Data_Packet_Length, HC_Synchronous_Data_Packet_Length, HC_Total_Num_ACL_Data_Packets, HC_Total_Num_Synchronous_Data_Packets

Description:

The Read_Buffer_Size command is used to read the maximum size of the data portion of HCI ACL and synchronous Data Packets sent from the Host to the Controller. The Host will segment the data to be transmitted from the Host to the Controller according to these sizes, so that the HCI Data Packets will contain data with up to these sizes. The Read_Buffer_Size command also returns the total number of HCI ACL and synchronous Data Packets that can be stored in the data buffers of the Controller. The Read_Buffer_Size command must be issued by the Host before it sends any data to the Controller.

The HC_ACL_Data_Packet_Length return parameter will be used to determine the size of the L2CAP segments contained in ACL Data Packets, which are transferred from the Host to the Controller to be broken up into baseband packets by the Link Manager. The HC_Synchronous_Data_Packet_Length return parameter is used to determine the maximum size of HCI synchronous Data Packets. Both the Host and the Controller must support command and event packets, where the data portion (excluding header) contained in the packets is 255 octets in size. The HC_Total_Num_ACL_Data_Packets return parameter contains the total number of HCI ACL Data Packets that can be stored in the data buffers of the Controller. The Host will determine how the buffers are to be divided between different Connection Handles. The HC_Total_Num_Synchronous_Data_Packets return parameter gives the same information but for HCI synchronous Data Packets.
Note: the HC_ACL_Data_Packet_Length and HC_Synchronous_Data_Packet_Length return parameters do not include the length of the HCI Data Packet header.

Command Parameters:

None.

Return Parameters:

Status: *Size: 1 Octet*

Value	Parameter Description
0x00	Read_Buffer_Size command succeeded.
0x01-0xFF	Read_Buffer_Size command failed. See "Error Codes" on page 291 [Part D] for list of Error Codes.

HC_ACL_Data_Packet_Length: *Size: 2 Octets*

Value	Parameter Description
0xXXXX	Maximum length (in octets) of the data portion of each HCI ACL Data Packet that the Controller is able to accept.

HC_Synchronous_Data_Packet_Length: *Size: 1 Octet*

Value	Parameter Description
0xXX	Maximum length (in octets) of the data portion of each HCI Synchronous Data Packet that the Controller is able to accept.

HC_Total_Num_ACL_Data_Packets: *Size: 2 Octets*

Value	Parameter Description
0xXXXX	Total number of HCI ACL Data Packets that can be stored in the data buffers of the Controller.

HC_Total_Num_Synchronous_Data_Packets: *Size: 2 Octets*

Value	Parameter Description
0xXXXX	Total number of HCI Synchronous Data Packets that can be stored in the data buffers of the Controller.

Event(s) generated (unless masked away):

When the Read_Buffer_Size command has completed, a Command Complete event will be generated.

7.4.6 Read BD_ADDR Command

Command	OCF	Command Parameters	Return Parameters
HCI_Read_BD_ADDR	0x0009		Status, BD_ADDR

Description:

This command shall read the Bluetooth device address (BD_ADDR). See the "Baseband Specification" on page 45 [Part B] for details of how BD_ADDR is used.

Command Parameters:

None.

Return Parameters:

Status: *Size: 1 Octet*

Value	Parameter Description
0x00	Read_BD_ADDR command succeeded.
0x01-0xFF	Read_BD_ADDR command failed. See "Error Codes" on page 291 [Part D] for list of Error Codes.

BD_ADDR: *Size: 6 Octets*

Value	Parameter Description
0xXXXXXXXXXXXX	BD_ADDR of the Device

Event(s) generated (unless masked away):

When the Read_BD_ADDR command has completed, a Command Complete event will be generated.

7.5 STATUS PARAMETERS

The Controller modifies all status parameters. These parameters provide information about the current state of the Controller, Link Manager, and Baseband. The host device cannot modify any of these parameters other than to reset certain specific parameters. For the Status and baseband, the OGF is defined as 0x05.

7.5.1 Read Failed Contact Counter Command

Command	OCF	Command Parameters	Return Parameters
HCI_Read_Failed_ Contact_Counter	0x0001	Connection_Handle	Status, Connection_Handle, Failed_Contact_Counter

Description:

This command will read the value for the Failed_Contact_Counter parameter for a particular connection to another device. The Connection_Handle must be a Connection_Handle for an ACL connection.
See Section 6.17 on page 364.

Command Parameters:

Connection_Handle: *Size: 2 Octets (12 Bits meaningful)*

Value	Parameter Description
0xXXXX	The Connection Handle for the Connection for which the Failed Contact Counter should be read. Range: 0x0000-0x0EFF (0x0F00 - 0x0FFF Reserved for future use)

Return Parameters:

Status: *Size: 1 Octet*

Value	Parameter Description
0x00	Read_Failed_Contact_Counter command succeeded.
0x01-0xFF	Read_Failed_Contact_Counter command failed. See "Error Codes" on page 291 [Part D] for list of Error Codes.

Connection_Handle: *Size: 2 Octets (12 Bits meaningful)*

Value	Parameter Description
0xXXXX	The Connection Handle for the Connection for which the Failed Contact Counter has been read. Range: 0x0000-0x0EFF (0x0F00 - 0x0FFF Reserved for future use)

Failed_Contact_Counter: *Size: 2 Octets*

Value	Parameter Description
0xXXXX	Number of consecutive failed contacts for a connection corresponding to the connection handle.

Event(s) generated (unless masked away):

When the Read_Failed_Contact_Counter command has completed, a Command Complete event will be generated.

7.5.2 Reset Failed Contact Counter Command

Command	OCF	Command Parameters	Return Parameters
HCI_Reset_Failed_ Contact_Counter	0x0002	Connection_Handle	Status, Connection_Handle

Description:

This command will reset the value for the Failed_Contact_Counter parameter for a particular connection to another device. The Connection_Handle must be a Connection_Handle for an ACL connection.
See Section 6.17 on page 364.

Command Parameters:

Connection_Handle: *Size: 2 Octets (12 Bits meaningful)*

Value	Parameter Description
0xXXXX	The Connection Handle for the Connection for which the Failed Contact Counter should be reset. Range: 0x0000-0x0EFF (0x0F00 - 0x0FFF Reserved for future use)

Return Parameters:

Status: *Size: 1 Octet*

Value	Parameter Description
0x00	Reset_Failed_Contact_Counter command succeeded.
0x01-0xFF	Reset_Failed_Contact_Counter command failed. See "Error Codes" on page 291 [Part D] for list of Error Codes.

Connection_Handle: *Size: 2 Octets (12 Bits meaningful)*

Value	Parameter Description
0xXXXX	The Connection Handle for the Connection for which the Failed Contact Counter has been reset. Range: 0x0000-0x0EFF (0x0F00 - 0x0FFF Reserved for future use)

Event(s) generated (unless masked away):

When the Reset_Failed_Contact_Counter command has completed, a Command
Complete event will be generated.

7.5.3 Read Link Quality Command

Command	OCF	Command Parameters	Return Parameters
HCI_Read_Link_Quality	0x0003	Connection_Handle	Status, Connection_Handle, Link_Quality

Description:

This command will return the value for the Link_Quality for the specified Connection Handle. The Connection_Handle must be a Connection_Handle for an ACL connection. This command will return a Link_Quality value from 0-255, which represents the quality of the link between two Bluetooth devices. The higher the value, the better the link quality is. Each Bluetooth module vendor will determine how to measure the link quality.

Command Parameters:

Connection_Handle: *Size: 2 Octets (12 Bits meaningful)*

Value	Parameter Description
0xXXXX	The Connection Handle for the connection for which link quality parameters are to be read. Range: 0x0000-0x0EFF (0x0F00 - 0x0FFF Reserved for future use)

Return Parameters:

Status: *Size: 1 Octet*

Value	Parameter Description
0x00	Read_Link_Quality command succeeded.
0x01-0xFF	Read_Link_Quality command failed.See “Error Codes” on page 291 [Part D] for list of Error Codes.

Connection_Handle: *Size: 2 Octets (12 Bits meaningful)*

Value	Parameter Description
0xXXXX	The Connection Handle for the connection for which the link quality parameter has been read. Range: 0x0000-0x0EFF (0x0F00 - 0x0FFF Reserved for future use)

Link_Quality: *Size: 1 Octet*

Value	Parameter Description
0xXX	The current quality of the Link connection between the local device and the remote device specified by the Connection Handle Range: 0x00 – 0xFF The higher the value, the better the link quality is.

Event(s) generated (unless masked away):

When the Read_Link_Quality command has completed, a Command Complete event will be generated.

7.5.4 Read RSSI Command

Command	OCF	Command Parameters	Return Parameters
HCI_Read_RSSI	0x0005	Connection_Handle	Status, Connection_Handle, RSSI

Description:

This command will read the value for the difference between the measured Received Signal Strength Indication (RSSI) and the limits of the Golden Receive Power Range (see Radio Specification Section 4.6 on page 39) for a connection handle to another Bluetooth device. The Connection_Handle must be a Connection_Handle for an ACL connection. Any positive RSSI value returned by the Controller indicates how many dB the RSSI is above the upper limit, any negative value indicates how many dB the RSSI is below the lower limit. The value zero indicates that the RSSI is inside the Golden Receive Power Range.
Note: how accurate the dB values will be depends on the Bluetooth hardware. The only requirements for the hardware are that the Bluetooth device is able to tell whether the RSSI is inside, above or below the Golden Device Power Range.

The RSSI measurement compares the received signal power with two threshold levels, which define the Golden Receive Power Range. The lower threshold level corresponds to a received power between -56 dBm and 6 dB above the actual sensitivity of the receiver. The upper threshold level is 20 dB above the lower threshold level to an accuracy of +/- 6 dB.

Command Parameters:

Connection_Handle: *Size: 2 Octets (12 Bits meaningful)*

Value	Parameter Description
0xXXXX	The Connection Handle for the Connection for which the RSSI is to be read. Range: 0x0000-0x0EFF (0x0F00 - 0x0FFF Reserved for future use)

Return Parameters:

Status: *Size: 1 Octet*

Value	Parameter Description
0x00	Read_RSSI command succeeded.
0x01-0xFF	Read_RSSI command failed. See "Error Codes" on page 291 [Part D] for list of Error Codes.

Connection_Handle: *Size: 2 Octets (12 Bits meaningful)*

Value	Parameter Description
0xXXXX	The Connection Handle for the Connection for which the RSSI has been read. Range: 0x0000-0x0EFF (0x0F00 - 0x0FFF Reserved for future use)

RSSI: *Size: 1 Octet*

Value	Parameter Description
N = 0xXX	Size: 1 Octet (signed integer) Range: -128 ≤ N ≤ 127 Units: dB

Event(s) generated (unless masked away):

When the Read_RSSI command has completed, a Command Complete event will be generated.

7.5.5 Read AFH Channel Map Command

Command	OCF	Command Parameters	Return Parameters
Read_AFH _Channel_Map	0x0006	Connection_Handle	Status, Connection_Handle, AFH_Mode, AFH_Channel_Map

Description:

This command will return the values for the AFH_Mode and AFH_Channel_Map for the specified Connection Handle. The Connection_Handle must be a Connection_Handle for an ACL connection.

The returned values indicate the state of the hop sequence specified by the most recent LMP_Set_AFH message for the specified Connection_Handle, regardless of whether the master has received the baseband ACK or whether the AFH_Instant has passed.

This command shall be supported by a device that declares support for either the AFH_capable_slave or AFH_capable_master feature.

Command Parameters:

Connection_Handle: *Size: 2 Octets (12 Bits meaningful)*

Value	Parameter Description
0xXXXX	The Connection Handle for the Connection for which the Channel Map is to be read. Range: 0x0000-0x0EFF (0x0F00-0x0FFF Reserved for future use)

Return Parameters:

Status: *Size: 1 Octet*

Value	Parameter Description
0x00	Read_AFH_Channel_Map command succeeded.
0x01-0xFF	Read_AFH_Channel_Map command failed. See "Error Codes" on page 291 [Part D] for list of Error Codes.

Connection_Handle: *Size: 2 Octets (12 Bits meaningful)*

Value	Parameter Description
0xXXXX	The Connection Handle for the Connection for which the Channel Map is to be read. Range: 0x0000-0x0EFF (0x0F00-0x0FFF Reserved for future use)

AFH_Mode: *Size: 1 Octet*

Value	Parameter Description
0x00	AFH disabled.
0x01	AFH enabled.
0x02-0xFF	Reserved for future use.

AFH_Channel_Map: *Size: 10 Octets (79 Bits meaningful)*

Value	Parameter Description
0xXXXXXXXX XXXXXXXX XXX	If AFH_Mode is AFH enabled then this parameter contains 79 1-bit fields, otherwise the contents are reserved. The nth such field (in the range 0 to 78) contains the value for channel *n*: Channel *n* is unused = 0 Channel *n* is used = 1 Range: 0x00000000000000000000-0x7FFFFFFFFFFFFFFFFFFF (0x80000000000000000000-0xFFFFFFFFFFFFFFFFFFFF Reserved for future use)

Event(s) generated (unless masked away):

When the Read_AFH_Channel_Map command has completed, a Command Complete event will be generated.

7.5.6 Read Clock Command

Command	OCF	Command Parameters	Return Parameters
HCI_Read_Clock	0x0007	Which_Clock Connection_Handle	Status, Connection_Handle, Clock, Accuracy

Description:

This command will read the estimate of the value of the Bluetooth Clock.

If the Which_Clock value is 0, then the Connection_Handle shall be ignored, and the local Bluetooth Clock value shall be returned, and the accuracy parameter shall be set to 0.

If the Which_Clock value is 1, then the Connection_Handle must be a valid ACL connection handle. If the current role of this ACL connection is Master, then the Bluetooth Clock of this device shall be returned. If the current role is Slave, then an estimate of the Bluetooth Clock of the remote master and the accuracy of this value shall be returned.

The accuracy reflects the clock drift that might have occurred since the slave last received a valid transmission from the master.

Note: The Bluetooth Clock has a minimum accuracy of 250ppm, or about 22 seconds drift in one day.

Note: See Baseband Specification, Section 1.1, on page 54 for more information about the Bluetooth Clock.

Command Parameters:

Connection_Handle: *Size: 2 Octets (12 Bits meaningful)*

Value	Parameter Description
0xXXXX	Connection Handle to be used to identify which connection to be used for reading the masters Bluetooth Clock. Range: 0x0000-0x0EFF (0x0F00 – 0x0FFF Reserved for future use)

Which_Clock: *Size 1 Octet)*

Value	Parameter Description
0xXX	0x00 = Local Clock (Connection Handle does not have to be a valid handle) 0x01 = Piconet Clock (Connection Handle shall be a valid ACL Handle) 0x02 to 0xFF = Reserved

Return Parameters:

Status: *Size: 1 Octet*

Value	Parameter Description
0x00	Read_BD_CLOCK command succeeded.
0x01 – 0xFF	Read_BD_CLOCK command failed. See "Error Codes" on page 291 [Part D] for list of Error Codes.

Connection_Handle: *Size: 2 Octets (12 Bits meaningful)*

Value	Parameter Description
0xXXXX	The Connection Handle for the Connection for which the master clock has been read. If the Which_Clock was 0, then the Connection_Handle shall be set to 0 and ignored upon receipt Range: 0x0000-0x0EFF (0x0F00 – 0x0FFF Reserved for future use)

Clock: *Size: 4 Octets (28 bits meaningful)*

Value	Parameter Description
0xXXXXXXXX	Bluetooth Clock of the device requested.

Accuracy: *Size: 2 Octets*

Value	Parameter Description
0xXX	+/- maximum Bluetooth Clock error. Value of 0xFFFF means Unknown. Accuracy = +/- N * 0.3125 msec (1 Bluetooth Clock) Range for N: 0x00-0xFFFE, 0xFFFF Time Range for N: 0 - 20479.375 sec

Event(s) generated (unless masked away):

When the Read_Clock command has completed, a Command Complete event will be generated.

7.6 TESTING COMMANDS

The Testing commands are used to provide the ability to test various functionalities of the Bluetooth hardware. These commands provide the ability to arrange various conditions for testing. For the Testing Commands, the OGF is defined as 0x06.

7.6.1 Read Loopback Mode Command

Command	OCF	Command Parameters	Return Parameters
HCI_Read_Loopback_Mode	0x0001		Status, Loopback_Mode

Description:

This command will read the value for the setting of the Controller's Loopback Mode. The setting of the Loopback Mode will determine the path of information. In Non-testing Mode operation, the Loopback Mode is set to Non-testing Mode and the path of the information is as specified by the Bluetooth specifications. In Local Loopback Mode, every Data Packet (ACL, SCO and eSCO) and Command Packet that is sent from the Host to the Controller is sent back with no modifications by the Controller, as shown in Figure 7.1 on page 533.
]For details of loopback modes see Section 7.6.2 on page 532.

Command Parameters:

None.

Return Parameters:

Status: *Size: 1 Octet*

Value	Parameter Description
0x00	Read_Loopback_Mode command succeeded.
0x01-0xFF	Read_Loopback_Mode command failed. See "Error Codes" on page 291 [Part D] for list of Error Codes.

Loopback_Mode: *Size: 1 Octet*

Value	Parameter Description
0x00	No Loopback mode enabled. **Default.**
0x01	Enable Local Loopback.
0x02	Enable Remote Loopback.
0x03-0xFF	Reserved for Future Use.

Event(s) generated (unless masked away):

When the Read_Loopback_Mode command has completed, a Command Complete event will be generated.

7.6.2 Write Loopback Mode Command

Command	OCF	Command Parameters	Return Parameters
HCI_Write_Loopback_Mode	0x0002	Loopback_Mode	Status

Description:

This command will write the value for the setting of the Controller's Loopback Mode. The setting of the Loopback Mode will determine the path of information. In Non-testing Mode operation, the Loopback Mode is set to Non-testing Mode and the path of the information as specified by the Bluetooth specifications. In Local Loopback Mode, every Data Packet (ACL, SCO and eSCO) and Command Packet that is sent from the Host to the Controller is sent back with no modifications by the Controller, as shown in Figure 7.1 on page 533.

When the Bluetooth Host Controller enters Local Loopback Mode, it shall respond with one to four connection handles, one for an ACL connection and zero to three for synchronous connections. The Host should use these connection handles when sending data in Local Loopback Mode. The number of connection handles returned for synchronous connections (between zero and three) is implementation specific. When in Local Loopback Mode, the Controller loops back commands and data to the Host. The Loopback Command event is used to loop back commands that the Host sends to the Controller.

There are some commands that are not looped back in Local Loopback Mode: Reset, Set_Controller_To_Host_Flow_Control, Host_Buffer_Size, Host_Number_Of_Completed_Packets, Read_Buffer_Size, Read_Loopback_Mode and Write_Loopback_Mode. These commands should be executed in the way they are normally executed. The commands Reset and Write_Loopback_Mode can be used to exit local loopback mode.

If Write_Loopback_Mode is used to exit Local Loopback Mode, Disconnection Complete events corresponding to the Connection Complete events that were sent when entering Local Loopback Mode should be sent to the Host. Furthermore, no connections are allowed in Local Loopback mode. If there is a connection, and there is an attempt to set the device to Local Loopback Mode, the attempt will be refused. When the device is in Local Loopback Mode, the Controller will refuse incoming connection attempts. This allows the Host Controller Transport Layer to be tested without any other variables.

If a device is set to Remote Loopback Mode, it will send back all data (ACL, SCO and eSCO) that comes over the air. It will only allow a maximum of one ACL connection and three synchronous connections, and these shall all be to the same remote device. If there are existing connections to a remote device and there is an attempt to set the local device to Remote Loopback Mode, the attempt shall be refused.

See Figure 7.2 on page 533, where the rightmost device is set to Remote Loopback Mode and the leftmost device is set to Non-testing Mode. This allows the Bluetooth Air link to be tested without any other variables.

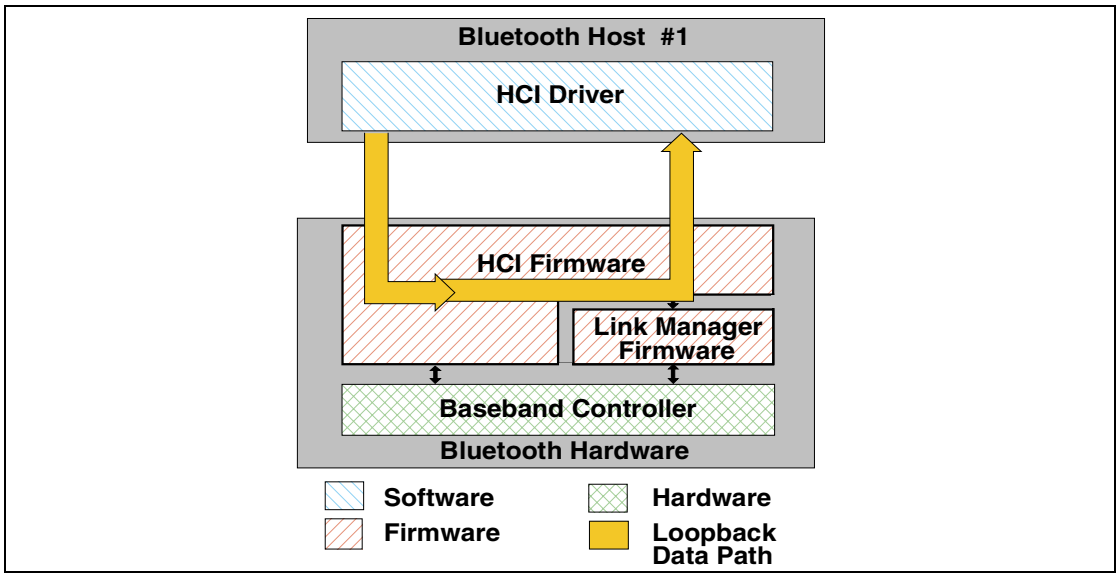

Figure 7.1: Local Loopback Mode

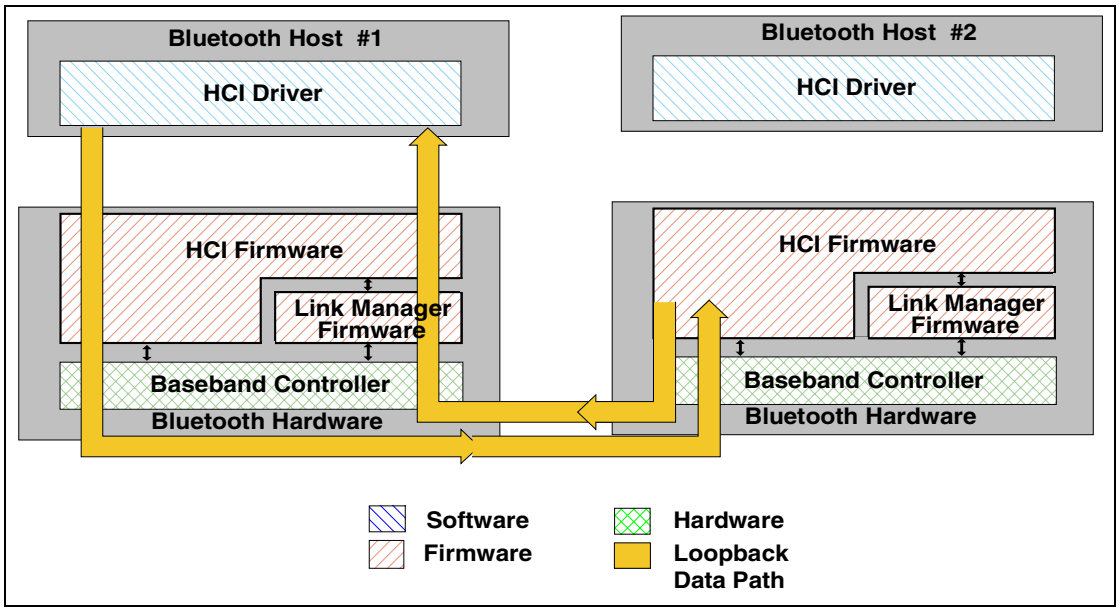

Figure 7.2: Remote Loopback Mode

Command Parameters:

Loopback_Mode: *Size: 1 Octet*

Value	Parameter Description
0x00	No Loopback mode enabled. **Default.**
0x01	Enable Local Loopback.
0x02	Enable Remote Loopback.
0x03-0xFF	Reserved for Future Use.

Return Parameters:

Status: *Size: 1 Octet*

Value	Parameter Description
0x00	Write_Loopback_Mode command succeeded.
0x01-0xFF	Write_Loopback_Mode command failed. See "Error Codes" on page 291 [Part D] for list of Error Codes.

Event(s) generated (unless masked away):

When the Write_Loopback_Mode command has completed, a Command Complete event will be generated.

7.6.3 Enable Device Under Test Mode Command

Command	OCF	Command Parameters	Return Parameters
HCI_Enable_Device_Under_Test_Mode	0x0003		Status

Description:

The Enable_Device_Under_Test_Mode command will allow the local Bluetooth module to enter test mode via LMP test commands. For details see "Link Manager Protocol" on page 189 [Part C]. The Host issues this command when it wants the local device to be the DUT for the Testing scenarios as described in the "Test Methodology" on page 233[vol. 3]. When the Controller receives this command, it will complete the command with a Command Complete event. The Controller functions as normal until the remote tester issues the LMP test command to place the local device into Device Under Test mode. To disable and exit the Device Under Test Mode, the Host can issue the HCI_Reset command. This command prevents remote Bluetooth devices from causing the local Bluetooth device to enter test mode without first issuing this command.

Command Parameters:

None.

Return Parameters:

Status: *Size: 1 Octet*

Value	Parameter Description
0x00	Enter_Device_Under_Test_Mode command succeeded.
0x01-0xFF	Enter_Device_Under_Test_Mode command failed. See "Error Codes" on page 291 [Part D] for list of Error Codes.

Event(s) generated (unless masked away):

When the Enter_Device_Under_Test_Mode command has completed, a Command Complete event will be generated.

7.7 EVENTS

7.7.1 Inquiry Complete Event

Event	Event Code	Event Parameters
Inquiry Complete	0x01	Status

Description:

The Inquiry Complete event indicates that the Inquiry is finished. This event contains a status parameter, which is used to indicate if the Inquiry completed successfully or if the Inquiry was not completed.

Event Parameters:

Status: *Size: 1 Octet*

Value	Parameter Description
0x00	Inquiry command completed successfully.
0x01-0xFF	Inquiry command failed. See "Error Codes" on page 291 [Part D] for list of Error Codes.

7.7.2 Inquiry Result Event

Event	Event Code	Event Parameters
Inquiry Result	0x02	Num_Responses, BD_ADDR[i], Page_Scan_Repetition_Mode[i], Page_Scan_Period_Mode[i], Reserved[i], Class_of_Device[i] Clock_Offset[i]

Description:

The Inquiry Result event indicates that a Bluetooth device or multiple Bluetooth devices have responded so far during the current Inquiry process. This event will be sent from the Controller to the Host as soon as an Inquiry Response from a remote device is received if the remote device supports only mandatory paging scheme. The Controller may queue these Inquiry Responses and send multiple Bluetooth devices information in one Inquiry Result event. The event can be used to return one or more Inquiry responses in one event.

Event Parameters:

Num_Responses: *Size: 1 Octet*

Value	Parameter Description
0xXX	Number of responses from the Inquiry.

BD_ADDR[i]: *Size: 6 Octets * Num_Responses*

Value	Parameter Description
0xXXXXXXXXXXXX	BD_ADDR for each device which responded.

Page_Scan_Repetition_Mode[i]: *Size: 1 Octet * Num_Responses*

Value	Parameter Description
0x00	R0
0x01	R1
0x02	R2
0x03 – 0xFF	Reserved

Page_Scan_Period_Mode[i]: *Size: 1 Octet * Num_Responses*

Value	Parameter Description
0x00	P0
0x01	P1
0x02	P2
0x03 – 0xFF	Reserved

Reserved[i]: *Size: 1 Octet * Num_Responses*

Value	Parameter Description
0xXX	Reserved, must be set to 0x00.

Class_of_Device[i]: *Size: 3 Octets * Num_Responses*

Value	Parameter Description
0xXXXXXX	Class of Device for the device

Clock_Offset[i]: *Size: 2 Octets * Num_Responses*

Bit format	Parameter Description
Bit 14-0	Bit 16-2 of CLKslave-CLKmaster.
Bit 15	Reserved

7.7.3 Connection Complete Event

Event	Event Code	Event Parameters
Connection Complete	0x03	Status, Connection_Handle, BD_ADDR, Link_Type, Encryption_Mode

Description:

The Connection Complete event indicates to both of the Hosts forming the connection that a new connection has been established. This event also indicates to the Host, which issued the Create Connection, or Accept_Connection_Request or Reject_Connection_Request command and then received a Command Status event, if the issued command failed or was successful.

Event Parameters:

Status: *Size: 1 Octet*

Value	Parameter Description
0x00	Connection successfully completed.
0x01-0xFF	Connection failed to Complete. See "Error Codes" on page 291 [Part D] for list of Error Codes.

Connection_Handle: *Size: 2 Octets (12 Bits meaningful)*

Value	Parameter Description
0xXXXX	Connection Handle to be used to identify a connection between two Bluetooth devices. The Connection Handle is used as an identifier for transmitting and receiving voice or data. Range: 0x0000-0x0EFF (0x0F00 - 0x0FFF Reserved for future use)

BD_ADDR: *Size: 6 Octets*

Value	Parameter Description
0xXXXXXXXXXXXX	BD_ADDR of the other connected Device forming the connection.

Link_Type: *Size: 1 Octet*

Value	Parameter Description
0x00	SCO connection.
0x01	ACL connection (Data Channels).
0x02-0xFF	Reserved for future use.

Encryption_Mode: *Size: 1 Octet*

Value	Parameter Description
See Section 6.16 on page 363.	

7.7.4 Connection Request Event

Event	Event Code	Event Parameters
Connection Request	0x04	BD_ADDR, Class_of_Device, Link_Type

Description:

The Connection Request event is used to indicate that a new incoming connection is trying to be established. The connection may either be accepted or rejected. If this event is masked away and there is an incoming connection attempt and the Controller is not set to auto-accept this connection attempt, the Controller will automatically refuse the connection attempt. When the Host receives this event and the link type parameter is ACL, it should respond with either an Accept_Connection_Request or Reject_Connection_Request command before the timer Conn_Accept_Timeout expires. If the link type is SCO or eSCO, the Host should reply with the Accept_Synchronous_Connection_Request or the Reject_Synchronous_Connection_Request Command. If the link type is SCO, the host may respond with Accept_Connection_Request. If the Event is responded to with Accept_Connection_Request, then the default parameter settings of the Accept_Synchronous_Connection_Request (see Section 7.1.27 on page 415) should be used by the local LM when negotiating the SCO or eSCO link parameters. In that case, the Connection_Complete Event and not the Synchronous_Connection_Complete Event, shall be returned on completion of the connection.

Event Parameters:

BD_ADDR: *Size: 6 Octets*

Value	Parameter Description
0xXXXXXXXXXXXX	BD_ADDR of the device that requests the connection.

Class_of_Device: *Size: 3 Octets*

Value	Parameter Description
0xXXXXXX	Class of Device for the device, which request the connection.
0x000000	Unknown Class of Device

Link_Type: *Size: 1 Octet*

Value	Parameter Description
0x00	SCO Connection requested
0x01	ACL Connection requested
0x02	eSCO Connection requested
0x03-0xFF	Reserved for Future Use.

7.7.5 Disconnection Complete Event

Event	Event Code	Event Parameters
Disconnection Complete	0x05	Status, Connection_Handle, Reason

Description:

The Disconnection Complete event occurs when a connection is terminated. The status parameter indicates if the disconnection was successful or not. The reason parameter indicates the reason for the disconnection if the disconnection was successful. If the disconnection was not successful, the value of the reason parameter can be ignored by the Host. For example, this can be the case if the Host has issued the Disconnect command and there was a parameter error, or the command was not presently allowed, or a connection handle that didn't correspond to a connection was given.
Note: When a physical link fails, one Disconnection Complete event will be returned for each logical channel on the physical link with the corresponding Connection handle as a parameter.

Event Parameters:

Status: *Size: 1 Octet*

Value	Parameter Description
0x00	Disconnection has occurred.
0x01-0xFF	Disconnection failed to complete. See "Error Codes" on page 291 [Part D] for list of Error Codes.

Connection_Handle: *Size: 2 Octets (12 Bits meaningful)*

Value	Parameter Description
0xXXXX	Connection Handle which was disconnected. Range: 0x0000-0x0EFF (0x0F00 - 0x0FFF Reserved for future use)

Reason: *Size: 1 Octet*

Value	Parameter Description
0xXX	Reason for disconnection. See "Error Codes" on page 291 [Part D] for error codes and description.

7.7.6 Authentication Complete Event

Event	Event Code	Event Parameters
Authentication Complete	0x06	Status, Connection_Handle

Description:

The Authentication Complete event occurs when authentication has been completed for the specified connection. The Connection_Handle must be a Connection_Handle for an ACL connection.

Event Parameters:

Status: *Size: 1 Octet*

Value	Parameter Description
0x00	Authentication Request successfully completed.
0x01-0xFF	Authentication Request failed to complete. See "Error Codes" on page 291 [Part D] for list of Error Codes.

Connection_Handle: *Size: 2 Octets (12 Bits meaningful)*

Value	Parameter Description
0xXXXX	Connection Handle for which Authentication has been performed. Range: 0x0000-0x0EFF (0x0F00 - 0x0FFF Reserved for future use)

7.7.7 Remote Name Request Complete Event

Event	Event Code	Event Parameters
Remote Name Request Complete	0x07	Status, BD_ADDR, Remote_Name

Description:

The Remote Name Request Complete event is used to indicate that a remote name request has been completed. The Remote_Name event parameter is a UTF-8 encoded string with up to 248 octets in length. The Remote_Name event parameter will be null-terminated (0x00) if the UTF-8 encoded string is less than 248 octets. The BD_ADDR event parameter is used to identify which device the user-friendly name was obtained from.
Note: the Remote_Name Parameter is a string parameter. Endianess does therefore not apply to the Remote_Name Parameter. The first octet of the name is received first.

Event Parameters:

Status: *Size: 1 Octet*

Value	Parameter Description
0x00	Remote_Name_Request command succeeded.
0x01-0xFF	Remote_Name_Request command failed. See "Error Codes" on page 291 [Part D] for list of Error Codes.

BD_ADDR: *Size: 6 Octets*

Value	Parameter Description
0xXXXXXXXXXXXX	BD_ADDR for the device whose name was requested.

Remote_Name: *Size: 248 Octets*

Value	Parameter Description
Name[248]	A UTF-8 encoded user-friendly descriptive name for the remote device. If the name contained in the parameter is shorter than 248 octets, the end of the name is indicated by a NULL octet (0x00), and the following octets (to fill up 248 octets, which is the length of the parameter) do not have valid values.

7.7.8 Encryption Change Event

Event	Event Code	Event Parameters
Encryption Change	0x08	Status, Connection_Handle, Encryption_Enable

Description:

The Encryption Change event is used to indicate that the change in the encryption has been completed for the Connection Handle specified by the Connection_Handle event parameter. The Connection_Handle will be a Connection_Handle for an ACL connection. The Encryption_Enable event parameter specifies the new Encryption Enable for the Connection Handle specified by the Connection_Handle event parameter. This event will occur on both devices to notify the Hosts when Encryption has changed for the specified Connection Handle between two devices.

Event Parameters:

Status: *Size: 1 Octet*

Value	Parameter Description
0x00	Encryption Change has occurred.
0x01-0xFF	Encryption Change failed. See "Error Codes" on page 291 [Part D] for list of Error Codes.

Connection_Handle: *Size: 2 Octets (12 Bits meaningful)*

Value	Parameter Description
0xXXXX	Connection Handle for which the link layer encryption has been enabled/disabled for all Connection Handles with the same Bluetooth device end-point as the specified Connection Handle. Range: 0x0000-0x0EFF (0x0F00 - 0x0FFF Reserved for future use)

Encryption_Enable: *Size: 1 Octet*

Value	Parameter Description
0x00	Link Level Encryption is OFF.
0x01	Link Level Encryption is ON.

7.7.9 Change Connection Link Key Complete Event

Event	Event Code	Event Parameters
Change Connection Link Key Complete	0x09	Status, Connection_Handle

Description:

The Change Connection Link Key Complete event is used to indicate that the change in the Link Key for the Connection Handle specified by the Connection_Handle event parameter has been completed.
The Connection_Handle will be a Connection_Handle for an ACL connection.
The Change Connection Link Key Complete event is sent only to the Host which issued the Change_Connection_Link_Key command.

Event Parameters:

Status: *Size: 1 Octet*

Value	Parameter Description
0x00	Change_Connection_Link_Key command succeeded.
0x01-0xFF	Change_Connection_Link_Key command failed. See "Error Codes" on page 291 [Part D] for list of Error Codes.

Connection_Handle: *Size: 2 Octets (12 Bits meaningful)*

Value	Parameter Description
0xXXXX	Connection Handle which the Link Key has been change for all Connection Handles with the same Bluetooth device end point as the specified Connection Handle. Range: 0x0000-0x0EFF (0x0F00 - 0x0FFF Reserved for future use)

7.7.10 Master Link Key Complete Event

Event	Event Code	Event Parameters
Master Link Key Complete	0x0A	Status, Connection_Handle, Key_Flag

Description:

The Master Link Key Complete event is used to indicate that the Link Key managed by the master of the piconet has been changed. The Connection_Handle will be a Connection_Handle for an ACL connection. The link key used for the connection will be the temporary link key of the master device or the semi-permanent link key indicated by the Key_Flag. The Key_Flag event parameter is used to indicate which Link Key (temporary link key of the Master, or the semi-permanent link keys) is now being used in the piconet.
Note: for a master, the change from a semi-permanent Link Key to temporary Link Key will affect all Connection Handles related to the piconet. For a slave, this change affects only this particular connection handle. A temporary link key must be used when both broadcast and point-to-point traffic shall be encrypted.

Event Parameters:

Status: *Size: 1 Octet*

Value	Parameter Description
0x00	Master_Link_Key command succeeded.
0x01-0xFF	Master_Link_Key command failed. See "Error Codes" on page 291 [Part D] for list of Error Codes.

Connection_Handle: *Size: 2 Octets (12 Bits meaningful)*

Value	Parameter Description
0xXXXX	Connection Handle for which the Link Key has been changed for all devices in the same piconet. Range: 0x0000-0x0EFF (0x0F00 - 0x0FFF Reserved for future use)

Key_Flag: *Size: 1 Octet*

Value	Parameter Description
0x00	Using Semi-permanent Link Key.
0x01	Using Temporary Link Key.

7.7.11 Read Remote Supported Features Complete Event

Event	Event Code	Event Parameters
Read Remote Supported Features Complete	0x0B	Status, Connection_Handle, LMP_Features

Description:

The Read Remote Supported Features Complete event is used to indicate the completion of the process of the Link Manager obtaining the supported features of the remote Bluetooth device specified by the Connection_Handle event parameter. The Connection_Handle will be a Connection_Handle for an ACL connection. The event parameters include a list of LMP features. For details see "Link Manager Protocol" on page 189[vol. 2].

Event Parameters:

Status: *Size: 1 Octet*

Value	Parameter Description
0x00	Read_Remote_Supported_Features command succeeded.
0x01-0xFF	Read_Remote_Supported_Features command failed. See "Error Codes" on page 291 [Part D] for list of Error Codes.

Connection_Handle: *Size: 2 Octets (12 Bits meaningful)*

Value	Parameter Description
0xXXXX	Connection Handle which is used for the Read_Remote_Supported_Features command. Range: 0x0000-0x0EFF (0x0F00 - 0x0FFF Reserved for future use)

LMP_Features: *Size: 8 Octets*

Value	Parameter Description
0xXXXXXXXX XXXXXXXX	Bit Mask List of LMP features. See "Link Manager Protocol" on page 189 [Part C].

7.7.12 Read Remote Version Information Complete Event

Event	Event Code	Event Parameters
Read Remote Version Information Complete	0x0C	Status, Connection_Handle, LMP_Version, Manufacturer_Name, LMP_Subversion

Description:

The Read Remote Version Information Complete event is used to indicate the completion of the process of the Link Manager obtaining the version information of the remote Bluetooth device specified by the Connection_Handle event parameter. The Connection_Handle will be a Connection_Handle for an ACL connection. The LMP_Version event parameter defines the specification version of the Bluetooth device. The Manufacturer_Name event parameter indicates the manufacturer of the remote Bluetooth device. The LMP_Subversion event parameter is controlled by the manufacturer and is implementation dependant. The LMP_Subversion event parameter defines the various revisions that each version of the Bluetooth hardware will go through as design processes change and errors are fixed. This allows the software to determine what Bluetooth hardware is being used and, if necessary, to work around various bugs in the hardware.

Event Parameters:

Status: *Size: 1 Octet*

Value	Parameter Description
0x00	Read_Remote_Version_Information command succeeded.
0x01-0xFF	Read_Remote_Version_Information command failed. See “Error Codes” on page 291 [Part D] for list of Error Codes.

Connection_Handle: *Size: 2 Octets (12 Bits meaningful)*

Value	Parameter Description
0xXXXX	Connection Handle which is used for the Read_Remote_Version_Information command. Range: 0x0000-0x0EFF (0x0F00 - 0x0FFF Reserved for future use)

LMP_Version: *Size: 1 Octet*

Value	Parameter Description
0xXX	Version of the Current LMP in the remote Bluetooth device. For LMP_Version information see https://www.bluetooth.org/foundry/assign-numb/document/assigned_numbers

Manufacturer_Name: *Size: 2 Octets*

Value	Parameter Description
0xXXXX	Manufacturer Name of the remote Bluetooth device, see Table 5.2 on page 277 in the Link Manager Protocol for assigned values (CompId).

LMP_Subversion: *Size: 2 Octets*

Value	Parameter Description
0xXXXX	Subversion of the Current LMP in the remote Bluetooth device, see Table 5.2 on page 277 in the Link Manager Protocol for assigned values (SubVersNr).

7.7.13 QoS Setup Complete Event

Event	Event Code	Event Parameters
QoS Setup Complete	0x0D	Status, Connection_Handle, Flags, Service_Type, Token_Rate, Peak_Bandwidth, Latency, Delay_Variation

Description:

The QoS Setup Complete event is used to indicate the completion of the process of the Link Manager setting up QoS with the remote Bluetooth device specified by the Connection_Handle event parameter. The Connection_Handle will be a Connection_Handle for an ACL connection. For more detail see “Logical Link Control and Adaptation Protocol Specification” on page 15[vol. 3].

Event Parameters:

Status: *Size: 1 Octet*

Value	Parameter Description
0x00	QoS_Setup command succeeded.
0x01-0xFF	QoS_Setup command failed. See "Error Codes" on page 291 [Part D] for list of Error Codes.

Connection_Handle: *Size: 2 Octets (12 Bits meaningful)*

Value	Parameter Description
0xXXXX	Connection Handle which is used for the QoS_Setup command. Range: 0x0000-0x0EFF (0x0F00 - 0x0FFF Reserved for future use)

Flags: *Size: 1 Octet*

Value	Parameter Description
0x00 – 0xFF	Reserved for Future Use.

Service_Type: *Size: 1 Octet*

Value	Parameter Description
0x00	No Traffic Available.
0x01	Best Effort Available.
0x02	Guaranteed Available.
0x03-0xFF	Reserved for Future Use.

Token_Rate: *Size: 4 Octets*

Value	Parameter Description
0xXXXXXXXX	Available Token Rate, in octets per second.

Peak_Bandwidth: *Size: 4 Octets*

Value	Parameter Description
0xXXXXXXXX	Available Peak Bandwidth, in octets per second.

Latency: *Size: 4 Octets*

Value	Parameter Description
0xXXXXXXXX	Available Latency, in microseconds.

Delay_Variation: *Size: 4 Octets*

Value	Parameter Description
0xXXXXXXXX	Available Delay Variation, in microseconds.

7.7.14 Command Complete Event

Event	Event Code	Event Parameters
Command Complete	0x0E	Num_HCI_Command_Packets, Command_Opcode, Return_Parameters

Description:

The Command Complete event is used by the Controller for most commands to transmit return status of a command and the other event parameters that are specified for the issued HCI command.

The Num_HCI_Command_Packets event parameter allows the Controller to indicate the number of HCI command packets the Host can send to the Controller. If the Controller requires the Host to stop sending commands, the Num_HCI_Command_Packets event parameter will be set to zero. To indicate to the Host that the Controller is ready to receive HCI command packets, the Controller generates a Command Complete event with the Command_Opcode 0x0000, and the Num_HCI_Command_Packets event parameter is set to 1 or more. Command_Opcode, 0x0000 is a NOP (No OPeration), and can be used to change the number of outstanding HCI command packets that the Host can send before waiting. See each command for the parameters that are returned by this event.

Event Parameters:

Num_HCI_Command_Packets: *Size: 1 Octet*

Value	Parameter Description
N = 0xXX	The Number of HCI command packets which are allowed to be sent to the Controller from the Host. Range for N: 0 – 255

Command_Opcode: *Size: 2 Octets*

Value	Parameter Description
0xXXXX	Opcode of the command which caused this event.

Return_Parameter(s): *Size: Depends on Command*

Value	Parameter Description
0xXX	This is the return parameter(s) for the command specified in the Command_Opcode event parameter. See each command's definition for the list of return parameters associated with that command.

7.7.15 Command Status Event

Event	Event Code	Event Parameters
Command Status	0x0F	Status, Num_HCI_Command_Packets, Command_Opcode

Description:

The Command Status event is used to indicate that the command described by the Command_Opcode parameter has been received, and that the Controller is currently performing the task for this command. This event is needed to provide mechanisms for asynchronous operation, which makes it possible to prevent the Host from waiting for a command to finish. If the command can not begin to execute (a parameter error may have occurred, or the command may currently not be allowed), the Status event parameter will contain the corresponding error code, and no complete event will follow since the command was not started. The Num_HCI_Command_Packets event parameter allows the Controller to indicate the number of HCI command packets the Host can send to the Controller. If the Controller requires the Host to stop sending commands, the Num_HCI_Command_Packets event parameter will be set to zero. To indicate to the Host that the Controller is ready to receive HCI command packets, the Controller generates a Command Status event with Status 0x00 and Command_Opcode 0x0000, and the Num_HCI_Command_Packets event parameter is set to 1 or more. Command_Opcode, 0x0000 is a NOP (No OPeration) and can be used to change the number of outstanding HCI command packets that the Host can send before waiting.

Event Parameters:

Status: *Size: 1 Octet*

Value	Parameter Description
0x00	Command currently in pending.
0x01-0xFF	Command failed. See “Error Codes” on page 291 [Part D] for list of Error Codes.

Num_HCI_Command_Packets: *Size: 1 Octet*

Value	Parameter Description
N = 0xXX	The Number of HCI command packets which are allowed to be sent to the Controller from the Host. Range for N: 0 – 255

Command_Opcode: *Size: 2 Octets*

Value	Parameter Description
0xXXXX	Opcode of the command which caused this event and is pending completion.

7.7.16 Hardware Error Event

Event	Event Code	Event Parameters
Hardware Error	0x10	Hardware_Code

Description:

The Hardware Error event is used to indicate some type of hardware failure for the Bluetooth device. This event is used to notify the Host that a hardware failure has occurred in the Bluetooth device.

Event Parameters:

Hardware_Code: *Size: 1 Octet*

Value	Parameter Description
0x00-0xFF	These Hardware_Codes will be implementation-specific, and can be assigned to indicate various hardware problems.

7.7.17 Flush Occurred Event

Event	Event Code	Event Parameters
Flush Occurred	0x11	Connection_Handle

Description:

The Flush Occurred event is used to indicate that, for the specified Connection Handle, the current user data to be transmitted has been removed. The Connection_Handle will be a Connection_Handle for an ACL connection. This could result from the flush command, or be due to the automatic flush. Multiple blocks of an L2CAP packet could have been pending in the Controller. If one baseband packet part of an L2CAP packet is flushed, then the rest of the HCI data packets for the L2CAP packet must also be flushed.

Event Parameters:

Connection_Handle: *Size: 2 Octets (12 Bits meaningful)*

Value	Parameter Description
0xXXXX	Connection Handle which was flushed. Range: 0x0000-0x0EFF (0x0F00 - 0x0FFF Reserved for future use)

7.7.18 Role Change Event

Event	Event Code	Event Parameters
Role Change	0x12	Status, BD_ADDR, New_Role

Description:

The Role Change event is used to indicate that the current Bluetooth role related to the particular connection has changed. This event only occurs when both the remote and local Bluetooth devices have completed their role change for the Bluetooth device associated with the BD_ADDR event parameter. This event allows both affected Hosts to be notified when the Role has been changed.

Event Parameters:

Status: *Size: 1 Octet*

Value	Parameter Description
0x00	Role change has occurred.
0x01-0xFF	Role change failed. See "Error Codes" on page 291 [Part D] for list of Error Codes.

BD_ADDR: *Size: 6 Octets*

Value	Parameter Description
0xXXXXXXXXXXXX	BD_ADDR of the Device for which a role change has completed.

New_Role: *Size: 1 Octet*

Value	Parameter Description
0x00	Currently the Master for specified BD_ADDR.
0x01	Currently the Slave for specified BD_ADDR.

7.7.19 Number Of Completed Packets Event

Event	Event Code	Event Parameters
Number Of Completed Packets	0x13	Number_of_Handles, Connection_Handle[i], HC_Num_Of_Completed_Packets[i]

Description:

The Number Of Completed Packets event is used by the Controller to indicate to the Host how many HCI Data Packets have been completed (transmitted or flushed) for each Connection Handle since the previous Number Of Completed Packets event was sent to the Host. This means that the corresponding buffer space has been freed in the Controller. Based on this information, and the HC_Total_Num_ACL_Data_Packets and HC_Total_Num_Synchronous_Data_Packets return parameter of the Read_Buffer_Size command, the Host can determine for which Connection Handles the following HCI Data Packets should be sent to the Controller.The Number Of Completed Packets event must not be sent before the corresponding Connection Complete event. While the Controller has HCI data packets in its buffer, it must keep sending the Number Of Completed Packets event to the Host at least periodically, until it finally reports that all the pending ACL Data Packets have been transmitted or flushed. The rate with which this event is sent is manufacturer specific.
Note that Number Of Completed Packets events will not report on synchronous connection handles if synchronous Flow Control is disabled. (See Read/Write_Synchronous_Flow_Control_Enable on page 486 and page 487.)

Event Parameters:

Number_of_Handles: *Size: 1 Octet*

Value	Parameter Description
0xXX	The number of Connection Handles and Num_HCI_Data_Packets parameters pairs contained in this event. Range: 0-255

*Connection_Handle[i]: Size: Number_of_Handles * 2 Octets(12 Bits meaningful)*

Value	Parameter Description
0xXXXX	Connection Handle. Range: 0x0000-0x0EFF (0x0F00 - 0x0FFF Reserved for future use)

HC_Num_Of_Completed_Packets [i]: *Size: Number_of_Handles * 2 Octets*

Value	Parameter Description
N = 0xXXXX	The number of HCI Data Packets that have been completed (transmitted or flushed) for the associated Connection Handle since the previous time the event was returned. Range for N: 0x0000-0xFFFF

7.7.20 Mode Change Event

Event	Event Code	Event Parameters
Mode Change	0x14	Status, Connection_Handle, Current_Mode, Interval

Description:

The Mode Change event is used to indicate when the device associated with the Connection Handle changes between Active mode, Hold mode, Sniff mode, and Park state. The Connection_Handle will be a Connection_Handle for an ACL connection. The Connection_Handle event parameter is used to indicate which connection the Mode Change event is for. The Current_Mode event parameter is used to indicate which state the connection is currently in. The Interval parameter is used to specify a time amount specific to each state. Each Controller that is associated with the Connection Handle which has changed Modes will send the Mode Change event to its Host.

Event Parameters:

Status: *Size: 1 Octet*

Value	Parameter Description
0x00	A Mode Change has occurred.
0x01-0xFF	Hold_Mode, Sniff_Mode, Exit_Sniff_Mode, Park_State, or Exit_Park_State command failed. See "Error Codes" on page 291 [Part D] for list of Error Codes.

Connection_Handle: *Size: 2 Octets(12 Bits meaningful)*

Value	Parameter Description
0xXXXX	Connection Handle. Range: 0x0000-0x0EFF (0x0F00 - 0x0FFF Reserved for future use)

Current_Mode: *Size: 1 Octet*

Value	Parameter Description
0x00	Active Mode.
0x01	Hold Mode.
0x02	Sniff Mode.
0x03	Park State.
0x04-0xFF	Reserved for future use.

Interval: *Size: 2 Octets*

Value	Parameter Description
N = 0xXXXX	Hold: Number of Baseband slots to wait in Hold Mode. Hold Interval = N * 0.625 msec (1 Baseband slot) Range for N: 0x0002-0xFFFE Time Range: 1.25 msec-40.9 sec Sniff: Number of Baseband slots between sniff intervals. Time between sniff intervals = 0.625 msec (1 Baseband slot) Range for N: 0x0002-0xFFFE Time Range: 1.25 msec-40.9 sec Park: Number of Baseband slots between consecutive beacons. Interval Length = N * 0.625 msec (1 Baseband slot) Range for N: 0x0002-0xFFFE Time Range: 1.25 msec-40.9 Seconds

7.7.21 Return Link Keys Event

Event	Event Code	Event Parameters
Return Link Keys	0x15	Num_Keys, BD_ADDR [i], Link_Key[i]

Description:

The Return Link Keys event is used by the Controller to send the Host one or more stored Link Keys. Zero or more instances of this event will occur after the Read_Stored_Link_Key command. When there are no link keys stored, no Return Link Keys events will be returned. When there are link keys stored, the number of link keys returned in each Return Link Keys event is implementation specific.

Event Parameters:

Num_Keys: *Size: 1 Octet*

Value	Parameter Description
0xXX	Number of Link Keys contained in this event. Range: 0x01 – 0x0B

BD_ADDR [i]: *Size: 6 Octets * Num_Keys*

Value	Parameter Description
0xXXXXXXXXXXXX	BD_ADDR for the associated Link Key.

Link_Key[i]: *Size:16 Octets * Num_Keys*

Value	Parameter Description
0xXXXXXXXXXX XXXXXXXXXXX XXXXXXXXXXX	Link Key for the associated BD_ADDR.

7.7.22 PIN Code Request Event

Event	Event Code	Event Parameters
PIN Code Request	0x16	BD_ADDR

Description:

The PIN Code Request event is used to indicate that a PIN code is required to create a new link key. The Host must respond using either the PIN Code Request Reply or the PIN Code Request Negative Reply command, depending on whether the Host can provide the Controller with a PIN code or not.
Note: If the PIN Code Request event is masked away, then the Controller will assume that the Host has no PIN Code.

When the Controller generates a PIN Code Request event in order for the local Link Manager to respond to the request from the remote Link Manager (as a result of a Create_Connection or Authentication_Requested command from the remote Host), the local Host must respond with either a PIN_Code_Request_Reply or PIN_Code_Request_Negative_Reply command before the remote Link Manager detects LMP response timeout. (See "Link Manager Protocol" on page 189 [Part C].)

Event Parameters:

BD_ADDR: *Size: 6 Octets*

Value	Parameter Description
0xXXXXXXXXXXXX	BD_ADDR of the Device which a new link key is being created for.

7.7.23 Link Key Request Event

Event	Event Code	Event Parameters
Link Key Request	0x17	BD_ADDR

Description:

The Link Key Request event is used to indicate that a Link Key is required for the connection with the device specified in BD_ADDR. If the Host has the requested stored Link Key, then the Host will pass the requested Key to the Controller using the Link_Key_Request_Reply Command. If the Host does not have the requested stored Link Key, then the Host will use the Link_Key_Request_Negative_Reply Command to indicate to the Controller that the Host does not have the requested key.
Note: If the Link Key Request event is masked away, then the Controller will assume that the Host has no additional link keys.

When the Controller generates a Link Key Request event in order for the local Link Manager to respond to the request from the remote Link Manager (as a result of a Create_Connection or Authentication_Requested command from the remote Host), the local Host must respond with either a Link_Key_Request_Reply or Link_Key_Request_Negative_Reply command before the remote Link Manager detects LMP response timeout. (See "Link Manager Protocol" on page 189 [Part C].)

Event Parameters:

BD_ADDR: *Size: 6 Octets*

Value	Parameter Description
0xXXXXXXXXXXXX	BD_ADDR of the Device which a stored link key is being requested.

7.7.24 Link Key Notification Event

Event	Event Code	Event Parameters
Link Key Notification	0x18	BD_ADDR, Link_Key,Key_Type

Description:

The Link Key Notification event is used to indicate to the Host that a new Link Key has been created for the connection with the device specified in BD_ADDR. The Host can save this new Link Key in its own storage for future use. Also, the Host can decided to store the Link Key in the Controller's Link Key Storage by using the Write_Stored_Link_Key command. The Key_Type event parameter informs the Host about which key type (combination key, local unit key or remote unit key) that has been used during pairing. If pairing with unit key is not supported, the Host can for instance discard the key or disconnect the link.

Event Parameters:

BD_ADDR: *Size: 6 Octets*

Value	Parameter Description
0xXXXXXXXXXXXX	BD_ADDR of the Device for which the new link key has been generated.

Link_Key: *Size: 16 Octets*

Value	Parameter Description
0xXXXXXXXXXXXXXXXXXXXXXXXXXXXX	Link Key for the associated BD_ADDR.

Key_Type: *Size: 1 Octets*

Value	Parameter Description
0x00	Combination Key
0x01	Local Unit Key
0x02	Remote Unit Key
0x03-0xFF	Reserved

7.7.25 Loopback Command Event

Event	Event Code	Event Parameters
Loopback Command	0x19	HCI_Command_Packet

Description:

When in Local Loopback mode, the Controller loops back commands and data to the Host. The Loopback Command event is used to loop back all commands that the Host sends to the Controller with some exceptions. See Section 7.6.1, "Read Loopback Mode Command," on page 531 for a description of which commands that are not looped back. The HCI_Command_Packet event parameter contains the entire HCI Command Packet including the header. Note: the event packet is limited to a maximum of 255 octets in the payload; since an HCI Command Packet has 3 octets of header data, only the first 252 octets of the command parameters will be returned.

Event Parameters:

HCI_Command_Packet: *Size: Depends on Command*

Value	Parameter Description
0xXXXXXX	HCI Command Packet, including header.

7.7.26 Data Buffer Overflow Event

Event	Event Code	Event Parameters
Data Buffer Overflow	0x1A	Link_Type

Description:

This event is used to indicate that the Controller's data buffers have been overflowed. This can occur if the Host has sent more packets than allowed. The Link_Type parameter is used to indicate that the overflow was caused by ACL or synchronous data.

Event Parameters:

Link_Type: *Size: 1 Octet*

Value	Parameter Description
0x00	Synchronous Buffer Overflow (Voice Channels).
0x01	ACL Buffer Overflow (Data Channels).
0x02-0xFF	Reserved for Future Use.

7.7.27 Max Slots Change Event

Event	Event Code	Event Parameters
Max Slots Change	0x1B	Connection_Handle, LMP_Max_Slots

Description:

This event is used to notify the Host about the LMP_Max_Slots parameter when the value of this parameter changes. It will be sent each time the maximum allowed length, in number of slots, for baseband packets transmitted by the local device, changes. The Connection_Handle will be a Connection_Handle for an ACL connection.

Event Parameters:

Connection_Handle: *Size: 2 Octets (12 Bits meaningful)*

Value	Parameter Description
0xXXXX	Connection Handle. Range: 0x0000-0x0EFF (0x0F00 - 0x0FFF Reserved for future use)

LMP_Max_Slots: *Size: 1 octet*

Value	Parameter Description
0x01, 0x03, 0x05	Maximum number of slots allowed to use for baseband packets, see Section 4.1.10 on page 223 and Section 5.2 on page 277 in "Link Manager Protocol" on page 189 [Part C].

7.7.28 Read Clock Offset Complete Event

Event	Event Code	Event Parameters
Read Clock Offset Complete	0x1C	Status, Connection_Handle, Clock_Offset

Description:

The Read Clock Offset Complete event is used to indicate the completion of the process of the Link Manager obtaining the Clock Offset information of the Bluetooth device specified by the Connection_Handle event parameter. The Connection_Handle will be a Connection_Handle for an ACL connection.

Event Parameters:

Status: *Size: 1 Octet*

Value	Parameter Description
0x00	Read_Clock_Offset command succeeded.
0x01-0xFF	Read_Clock_Offset command failed. See "Error Codes" on page 291 [Part D] for list of Error Codes.

Connection_Handle: *Size: 2 Octets (12 bits meaningful)*

Value	Parameter Description
0xXXXX	Specifies which Connection Handle's Clock Offset parameter is returned. Range: 0x0000-0x0EFF (0x0F00 - 0x0FFF Reserved for future use)

Clock_Offset: *Size: 2 Octets*

Bit format	Parameter Description
Bit 14-0	Bit 16-2 of CLKslave-CLKmaster.
Bit 15	Reserved.

7.7.29 Connection Packet Type Changed Event

Event	Event Code	Event Parameters
Connection Packet Type Changed	0x1D	Status, Connection_Handle, Packet_Type

Description:

The Connection Packet Type Changed event is used to indicate that the process has completed of the Link Manager changing which packet types can be used for the connection. This allows current connections to be dynamically modified to support different types of user data. The Packet_Type event parameter specifies which packet types the Link Manager can use for the connection identified by the Connection_Handle event parameter for sending L2CAP data or voice. The Packet_Type event parameter does not decide which packet types the LM is allowed to use for sending LMP PDUs.

Event Parameters:

Status: *Size: 1 Octet*

Value	Parameter Description
0x00	Connection Packet Type changed successfully.
0x01-0xFF	Connection Packet Type Changed failed. See "Error Codes" on page 291 [Part D] for list of Error Codes.

Connection_Handle: *Size: 2 Octets (12 Bits meaningful)*

Value	Parameter Description
0xXXXX	Connection Handle. Range: 0x0000-0x0EFF (0x0F00 - 0x0FFF Reserved for future use)

Packet_Type: *Size: 2 Octets*

For ACL_Link_Type

Value	Parameter Description
0x0001	Reserved for future use.
0x0002	Reserved for future use.
0x0004	Reserved for future use.
0x0008	DM1
0x0010	DH1
0x0020	Reserved for future use.
0x0040	Reserved for future use.
0x0080	Reserved for future use.

Value	Parameter Description
0x0100	Reserved for future use.
0x0200	Reserved for future use.
0x0400	DM3
0x0800	DH3
0x1000	Reserved for future use.
0x2000	Reserved for future use.
0x4000	DM5
0x8000	DH5

For SCO_Link_Type

Value	Parameter Description
0x0001	Reserved for future use.
0x0002	Reserved for future use.
0x0004	Reserved for future use.
0x0008	Reserved for future use.
0x0010	Reserved for future use.
0x0020	HV1
0x0040	HV2
0x0080	HV3
0x0100	Reserved for future use.
0x0200	Reserved for future use.
0x0400	Reserved for future use.
0x0800	Reserved for future use.
0x1000	Reserved for future use.
0x2000	Reserved for future use.
0x4000	Reserved for future use.
0x8000	Reserved for future use.

7.7.30 QoS Violation Event

Event	Event Code	Event Parameters
QoS Violation	0x1E	Connection_Handle

Description:

The QoS Violation event is used to indicate the Link Manager is unable to provide the current QoS requirement for the Connection Handle. This event indicates that the Link Manager is unable to provide one or more of the agreed QoS parameters. The Host chooses what action should be done. The Host can reissue QoS_Setup command to renegotiate the QoS setting for Connection Handle. The Connection_Handle will be a Connection_Handle for an ACL connection.

Event Parameters:

Connection_Handle: *Size: 2 Octets (12 Bits meaningful)*

Value	Parameter Description
0xXXXX	Connection Handle that the LM is unable to provide the current QoS requested for. Range: 0x0000-0x0EFF (0x0F00 - 0x0FFF Reserved for future use)

7.7.31 Page Scan Repetition Mode Change Event

Event	Event Code	Event Parameters
Page Scan Repetition Mode Change	0x20	BD_ADDR, Page_Scan_Repetition_Mode

Description:

The Page Scan Repetition Mode Change event indicates that the remote Bluetooth device with the specified BD_ADDR has successfully changed the Page_Scan_Repetition_Mode (SR).

Event Parameters:

BD_ADDR: *Size: 6 Octets*

Value	Parameter Description
0xXXXXXXXXXXXX	BD_ADDR of the remote device.

Page_Scan_Repetition_Mode: *Size: 1 Octet*

Value	Parameter Description
0x00	R0
0x01	R1
0x02	R2
0x03 – 0xFF	Reserved.

7.7.32 Flow Specification Complete Event

Event	Event Code	Event Parameters
HCI Flow Specification Complete	0x21	Status, Connection_Handle, Flags, Flow_direction, Service_Type, Token_Rate, Token_Bucket_Size, Peak_Bandwidth, Access Latency

Description:

The Flow Specification Complete event is used to inform the Host about the Quality of Service for the ACL connection the Controller is able to support. The Connection_Handle will be a Connection_Handle for an ACL connection. The flow parameters refer to the outgoing or incoming traffic of the ACL link, as indicated by the Flow_direction field. The flow parameters are defined in the L2CAP specification "Quality of Service (QoS) Option" on page 60[vol. 3]. When the Status parameter indicates a successful completion, the flow parameters specify the agreed values by the Controller. When the Status parameter indicates a failed completion with the Error Code *QoS Unacceptable Parameters* (0x2C), the flow parameters specify the acceptable values of the Controller. This enables the Host to continue the 'QoS negotiation' with a new HCI Flow_Specification command with flow parameter values that are acceptable for the Controller. When the Status parameter indicates a failed completion with the Error Code *QoS Rejected* (0x2D), this indicates a request of the Controller to discontinue the 'QoS negotiation'. When the Status parameter indicates a failed completion, the flow parameter values of the most recently successful completion must be assumed (or the default values when there was no success completion).

Event Parameters:

Status: *Size: 1 Octet*

Value	Parameter Description
0x00	Flow Specification command succeeded
0x01 – 0xFF	Flow Specification command failed. See "Error Codes" on page 291 [Part D] for list of Error Codes

Connection_Handle: *Size: 2 Octets (12 Bits meaningful)*

Value	Parameter Description
0xXXXX	Connection Handle used to identify for which ACL connection the Flow is specified. Range: 0x0000 - 0x0EFF (0x0F00 – 0x0FFF Reserved for future use)

Flags: *Size: 1 Octet)*

Value	Parameter Description
0x00 – 0xFF	Reserved for Future Use.

Flow_direction: *Size: 1 Octet*

Value	Parameter Description
0x00	Outgoing Flow i.e. traffic send over the ACL connection
0x01	Incoming Flow i.e. traffic received over the ACL connection
0x02 – 0xFF	Reserved for Future Use.

Service_Type: *Size: 1 Octet*

Value	Parameter Description
0x00	No Traffic
0x01	Best Effort
0x02	Guaranteed
0x03 – 0xFF	Reserved for Future Use

Token Rate: *Size: 4 Octets*

Value	Parameter Description
0xXXXXXXXX	Token Rate in octets per second

Token Bucket Size: *Size: 4 Octets*

Value	Parameter Description
0xXXXXXXXX	Token Bucket Size in octets

Peak_Bandwidth: *Size: 4 Octets*

Value	Parameter Description
0xXXXXXXXX	Peak Bandwidth in octets per second

Access Latency: *Size: 4 Octets*

Value	Parameter Description
0xXXXXXXXX	Access Latency in microseconds

7.7.33 Inquiry Result with RSSI Event

Event	Event Code	Event Parameters
Inquiry Result with RSSI	0x22	Num_responses, BD_ADDR[i], Page_Scan_Repetition_Mode[i], Page_Scan_Period_Mode[i], Class_of_Device[i], Clock_Offset[i], RSSI[i]

Description:

The Inquiry Result with RSSI event indicates that a Bluetooth device or multiple Bluetooth devices have responded so far during the current Inquiry process. This event will be sent from the Controller to the Host as soon as an Inquiry Response from a remote device is received if the remote device supports only mandatory paging scheme. This Controller may queue these Inquiry Responses and send multiple Bluetooth devices information in one Inquiry Result event. The event can be used to return one or more Inquiry responses in one event. The RSSI parameter is measured during the FHS packet returned by each responding slave.

This event shall only be generated if the Inquiry Mode parameter of the last Write_Inquiry_Mode command was set to 0x01 (Inquiry Result format with RSSI).

Note: the only difference between the Inquiry Result with RSSI event and the Inquiry Result event is the additional RSSI parameter.

Event Parameters:

Num_Responses: *Size: 1 Octet*

Value	Parameter Description
0xXX	Number of responses from the Inquiry.

BD_ADDR[i]: *Size: 6 Octets * Num_Responses*

Value	Parameter Description
0xXXXXXXXXXXXX	BD_ADDR for each device which responded.

Page_Scan_Repetition_Mode[i]: *Size: 1 Octet* Num_Responses*

Value	Parameter Description
0x00	R0
0x01	R1
0x02	R2
0x03 – 0xFF	Reserved

Page_Scan_Period_Mode[i]: *Size: 1 Octet* Num_Responses*

Value	Parameter Description
0x00	P0
0x01	P1
0x02	P2
0x03 – 0xFF	Reserved

Class_of_Device[i]: *Size: 3 Octets * Num_Responses*

Value	Parameter Description
0xXXXXXX	Class of Device for the device

Clock_Offset[i]: *Size: 2 Octets * Num_Responses*

Bit format	Parameter Description
Bit 14-0	Bit 16-2 of CLKslave-CLKmaster.
Bit 15	Reserved

RSSI[i]: *Size: 1 Octet * Num_Responses*

Value	Parameter Description
0xXX	Range: -127 to +20 Units: dBm

7.7.34 Read Remote Extended Features Complete Event

Event	Event Code	Event Parameters
Read Remote Extended Features Complete	0x23	Status, Connection_Handle, Page_Number, Maximum page number, Extended_LMP_Features

Description:

The Read Remote Extended Features Complete event is used to indicate the completion of the process of the Link Manager obtaining the remote extended LMP features of the remote device specified by the connection handle event parameter. The connection handle will be a connection handle for an ACL connection. The event parameters include a page of the remote devices extended LMP features. For details see "Link Manager Protocol" on page 189 [Part C].

Event Parameters:

Status: *Size: 1 Octet*

Value	Parameter Description
0x00	Request for remote extended features succeeded
0x01-0xFF	Request for remote extended features failed – standard HCI error value

Connection_Handle: *Size: 2 Octets (12 Bits meaningful)*

Value	Parameter Description
0xXXXX	The connection handle identifying the device to which the remote features apply. Range: 0x0000-0x0EFF (0x0F00-0x0FFF Reserved for future use)

Page Number: *Size: 1Octet*

Value	Parameter Description
0x00	The normal LMP features as returned by HCI_Read_Remote_Supported_Features
0x01-0xFF	The page number of the features returned

Maximum Page Number: *Size: 1Octet*

Value	Parameter Description
0x00-0xFF	The highest features page number which contains non-zero bits for the local device

Extended_LMP_Features: *Size: 8 Octets*

Value	Parameter Description
0xFFFFFFFFFFFFFFFF	Bit map of requested page of LMP features. See LMP specification for details

7.7.35 Synchronous Connection Complete Event

Event	Event Code	Event Parameters
Synchronous Connection Complete	0x2C	Status, Connection_Handle, BD_ADDR, Link Type, Transmission_Interval, Retransmission Window, Rx_Packet_Length, Tx_Packet_Length Air Mode

Description:

The Synchronous Connection Complete event indicates to both the Hosts that a new Synchronous connection has been established. This event also indicates to the Host, which issued the Setup_Synchronous_Connection, or Accept_Synchronous_Connection_Request or Reject_Synchronous_Connection_Request command and then received a Command Status event, if the issued command failed or was successful.

Event Parameters:

Status: *1 octet*

Value	Parameter Description
0x00	Connection successfully completed.
0x01 –0xFF	Connection failed to complete.See "Error Codes" on page 291 [Part D] for error codes and description.

Connection_Handle: *2 octets (12 Bits meaningful)*

Value	Parameter Description
0xXXXX	Connection Handle to be used to identify a connection between two Bluetooth devices. Range: 0x0000-0x0EFF (0x0F00 – 0x0FFF Reserved for future use)

BD_ADDR: *6 octets*

Value	Parameter Description
0xXXXXXXXXXXXX	BD_ADDR of the other connected device forming the connection.

Link_Type: *Size: 1 Octet*

Value	Parameter Description
0x00	SCO Connection
0x01	Reserved
0x02	eSCO Connection
0x03 – 0xFF	Reserved

Transmission_Interval: *1 octets*

Value	Parameter Description
0xXX	Time between two consecutive eSCO instants measured in slots. Must be zero for SCO links.

Retransmission window: *1 octets*

Value	Parameter Description
0xXX	The size of the retransmission window measured in slots. Must be zero for SCO links.

Rx_Packet_Length: *2 octets*

Value	Parameter Description
0xXXXX	Length in bytes of the eSCO payload in the receive direction. Must be zero for SCO links.

Tx_Packet_Length: *2 octets*

Value	Parameter Description
0xXXXX	Length in bytes of the eSCO payload in the transmit direction. Must be zero for SCO links.

Air Mode: *Size: 1 Octet*

Value	Parameter Description
0x00	µ-law log
0x01	A-law log
0x02	CVSD
0x03	Transparent Data
0x04 – 0xFF	Reserved

7.7.36 Synchronous Connection Changed event

Event	Event Code	Event Parameters
Synchronous Connection Changed	0x2D	Status, Connection_Handle, Transmission_Interval, Retransmission Window, Rx_Packet_Length, Tx_Packet_Length

Description:

The Synchronous Connection Changed event indicates to the Host that an existing Synchronous connection has been reconfigured. This event also indicates to the initiating Host (if the change was host initiated) if the issued command failed or was successful.

Command Parameters:

Status: *1 octet*

Value	Parameter Description
0x00	Connection successfully reconfigured.
0x01 –0xFF	Reconfiguration failed to complete. See "Error Codes" on page 291 [Part D] for error codes and description.

Connection_Handle: *2 octets (12 Bits meaningful)*

Value	Parameter Description
0xXXXX	Connection Handle to be used to identify a connection between two Bluetooth devices. Range: 0x0000-0x0EFF (0x0F00 – 0x0FFF Reserved for future use)

Transmission_Interval: *1 octet*

Value	Parameter Description
0xXX	Time between two consecutive SCO/eSCO instants measured in slots.

Retransmission window: *1 octet*

Value	Parameter Description
0xXX	The size of the retransmission window measured in slots. Must be zero for SCO links.

Rx_Packet_Length: *2 octets*

Value	Parameter Description
0xXXXX	Length in bytes of the SCO/eSCO payload in the receive direction.

Tx_Packet_Length: *2 octets*

Value	Parameter Description
0xXXXX	Length in bytes of the SCO/eSCO payload in the transmit direction.

8 LIST OF FIGURES

Figure 1.1: Overview of the Lower Software Layers 317
Figure 1.2: End to End Overview of Lower Software Layers to Transfer Data 318
Figure 5.1: HCI Command Packet 352
Figure 5.2: HCI ACL Data Packet 353
Figure 5.3: HCI Synchronous Data Packet 355
Figure 5.4: HCI Event Packet 356
Figure 7.1: Local Loopback Mode 533
Figure 7.2: Remote Loopback Mode 533

9 LIST OF TABLES

Table 3.1: Overview of commands and events 321
Table 3.2: Generic events 322
Table 3.3: Controller flow control 323
Table 3.4: Controller information 323
Table 3.5: Controller configuration 324
Table 3.6: Device discovery 325
Table 3.7: Connection setup 327
Table 3.8: Remote information 329
Table 3.9: Synchronous connections 330
Table 3.10: Connection state 331
Table 3.11: Piconet structure 332
Table 3.12: Quality of service 333
Table 3.13: Physical links 334
Table 3.14: Controller flow control. 335
Table 3.15: Link information 336
Table 3.16: Authentication and encryption 337
Table 3.17: Testing 339
Table 3.18: Alphabetical list of commands and events. 340

APPENDIX A: DEPRECATED COMMANDS, EVENTS AND CONFIGURATION PARAMETERS

Commands, events and configuration parameters in this section were in prior versions of the specification, but have been determined not to be required.

They may be implemented by a controller to allow for backwards compatibility with a host utilizing a prior version of the specification.

A host should not use these commands.

Contents:

Page Scan Mode 658

Read Page Scan Mode Command 659

Write Page Scan Mode Command 660

Read Country Code Command 661

Add SCO Connection Command 662

Page Scan Mode Change Event 664

Page Scan Mode

The Page_Scan_Mode parameter indicates the page scan mode that is used for default page scan. Currently one mandatory page scan mode and three optional page scan modes are defined. Following an inquiry response, if the Baseband timer T_mandatory_pscan has not expired, the mandatory page scan mode must be applied. For details see the "Baseband Specification" on page 45 [Part B] (Keyword: Page-Scan-Mode, FHS-Packet, T_mandatory_pscan)

Value	Parameter Description
0x00	Mandatory Page Scan Mode
0x01	Optional Page Scan Mode I
0x02	Optional Page Scan Mode II
0x03	Optional Page Scan Mode III
0x04-0xFF	Reserved

Read Page Scan Mode Command

Command	OGF	OCF	Command Parameters	Return Parameters
HCI_Read_Page_Scan_Mode	0x03	0x003D		Status, Page_Scan_Mode

Description:

This command is used to read the default Page Scan Mode configuration parameter of the local Bluetooth device. See “Page Scan Mode” on page 586..

Command Parameters:

None

Return Parameters:

Status: *Size: 1 Octet*

Value	Parameter Description
0x00	Read_Page_Scan_Mode command succeeded.
0x01-0xFF	Read_Page_Scan_Mode command failed. See “Error Codes” on page 291 [Part D] for list of Error Codes.

Page_Scan_Mode: *Size: 1 Octet*

Value	Parameter Description
See Appendix A, “Page Scan Mode” on page 586.	

Event(s) generated (unless masked away):

When the Read_Page_Scan_Mode command has completed, a Command Complete event will be generated.

Write Page Scan Mode Command

OGF: 0x03 (Controller and baseband commands)

Command	OGF	OCF	Command Parameters	Return Parameters
HCI_Write_Page_Scan_Mode	0x03	0x003E	Page_Scan_Mode	Status

Description:

This command is used to write the default Page Scan Mode configuration parameter of the local Bluetooth device. See “Page Scan Mode” on page 586.

Command Parameters:

Page_Scan_Mode: *Size: 1 Octet*

Value	Parameter Description
See Appendix A, “Page Scan Mode” on page 586.	

Return Parameters:

Status: *Size: 1 Octet*

Value	Parameter Description
0x00	Write_Page_Scan_Mode command succeeded.
0x01-0xFF	Write_Page_Scan_Mode command failed. See “Error Codes” on page 291 [Part D] for list of Error Codes.

Event(s) generated (unless masked away):

When the Write_Page_Scan_Mode command has completed, a Command Complete event will be generated.

Read Country Code Command

Command	OGF	OCF	Command Parameters	Return Parameters
HCI_Read_Country_Code	0x05	0x0007		Status, Country_Code

Description:

This command will read the value for the Country_Code return parameter. The Country_Code defines which range of frequency band of the ISM 2.4 GHz band will be used by the device. Each country has local regulatory bodies regulating which ISM 2.4 GHz frequency ranges can be used.

Command Parameters:

None.

Return Parameters:

Status: *Size: 1 Octet*

Value	Parameter Description
0x00	Read_Country_Code command succeeded.
0x01-0xFF	Read_Country_Code command failed. See "Error Codes" on page 291 [Part D] for error codes and description.

Country_Code: *Size: 1 Octet*

Value	Parameter Description
0x00	North America & Europe* and Japan
0x01	France
0x04-FF	Reserved for Future Use.

*. Except France

Event(s) generated (unless masked away):

When the Read_Country_Code command has completed, a Command Complete event will be generated.

Add SCO Connection Command

Command	OGF	OCF	Command Parameters	Return Parameters
HCI_Add_SCO_Connection	0x01	0x0007	Connection_Handle, Packet_Type	

Description:

This command will cause the link manager to create a SCO connection using the ACL connection specified by the Connection_Handle command parameter. This command causes the local Bluetooth device to create a SCO connection. The Link Manager will determine how the new connection is established. This connection is determined by the current state of the device, its piconet, and the state of the device to be connected. The Packet_Type command parameter specifies which packet types the Link Manager should use for the connection. The Link Manager must only use the packet type(s) specified by the Packet_Type command parameter for sending HCI SCO Data Packets. Multiple packet types may be specified for the Packet_Type command parameter by performing a bitwise OR operation of the different packet types. The Link Manager may choose which packet type is to be used from the list of acceptable packet types. A Connection Handle for this connection is returned in the Connection Complete event (see below).
Note: An SCO connection can only be created when an ACL connection already exists and when it is not put in park. For a definition of the different packet types, see the "Baseband Specification" on page 45 [Part B].

Note: At least one packet type must be specified. The Host should enable as many packet types as possible for the Link Manager to perform efficiently. However, the Host must not enable packet types that the local device does not support.

Command Parameters:

Connection_Handle *Size 2 Octets (12 Bits meaningful)*

Value	Parameter Description
0xXXXX	Connection Handle for the ACL connection being used to create an SCO connection. Range: 0x0000-0x0EFF (0x0F00 - 0x0FFF Reserved for future use)

Packet_Type: *Size: 2 Octets*

Value	Parameter Description
0x0001	Reserved for future use.
0x0002	Reserved for future use.
0x0004	Reserved for future use.
0x0008	Reserved for future use.
0x0010	Reserved for future use.
0x0020	HV1
0x0040	HV2
0x0080	HV3
0x0100	Reserved for future use.
0x0200	Reserved for future use.
0x0400	Reserved for future use.
0x0800	Reserved for future use.
0x1000	Reserved for future use.
0x2000	Reserved for future use.
0x4000	Reserved for future use.
0x8000	Reserved for future use.

Return Parameters:

None.

Event(s) generated (unless masked away):

When the Controller receives the Add_SCO_Connection command, it sends the Command Status event to the Host. In addition, when the LM determines the connection is established, the local Controller will send a Connection Complete event to its Host, and the remote Controller will send a Connection Complete event or a Synchronous Connection Complete event to the Host. The Connection Complete event contains the Connection Handle if this command is successful.
Note: no Command Complete event will be sent by the Controller to indicate that this command has been completed. Instead, the Connection Complete event will indicate that this command has been completed.

Page Scan Mode Change Event

Event	Event Code	Event Parameters
Page Scan Mode Change	0x1F	BD_ADDR, Page_Scan_Mode

Description:

The Page Scan Mode Change event indicates that the connected remote Bluetooth device with the specified BD_ADDR has successfully changed the Page_Scan_Mode.

Event Parameters:

BD_ADDR: *Size: 6 Octets*

Value	Parameter Description
0xXXXXXXXXXXXX	BD_ADDR of the remote device.

Page_Scan_Mode: *Size: 1 Octet*

Value	Parameter Description
0x00	Mandatory Page Scan Mode.
0x01	Optional Page Scan Mode I.
0x02	Optional Page Scan Mode II.
0x03	Optional Page Scan Mode III.
0x04 – 0xFF	Reserved.

Core System Package [Controller volume]

Part F

MESSAGE SEQUENCE CHARTS

Between Host and Host Controller/Link Manager

Examples of interactions between Host Controller Interface Commands and Events and Link Manager Protocol Data Units are represented in the form of message sequence charts. These charts show typical interactions and do not indicate all possible protocol behavior.

CONTENTS

1 1Introduction 599
1.1 Notation 599
1.2 Flow of Control 600
1.3 Example MSC 600
2 Services Without Connection Request 601
2.1 Remote Name Request 601
Step 1: 601
Step 2a: 601
Step 2b: 602
2.2 One-time Inquiry 602
Step 1: 602
Step 2: 603
Step 3a: 603
Step 3b: 604
2.3 Periodic Inquiry 604
Step 1: 604
Step 2: 605
Step 3: 605
Step 4: 605
3 ACL Connection Establishment and Detachment 607
3.1 Connection Setup 608
Step 1: 608
Step 2: 608
Step 3: 608
Step 4a: 609
Step 4b: 609
Step 4c: 610
Step 5: 610
Step 6: 611
Step 7a: 612
Step 7b: 613
Step 8: 613
Step 9: 614
Step 10: 614

4 Optional Activities After ACL Connection Establishment.....615
4.1 Authentication Requested.....615
Step 1: 615
4.2 Set Connection Encryption 616
Step 1: 616
Step 2: 616
4.3 Change Connection Link Key 617
Step 1: 617
4.4 Master Link Key 618
Step 1: 618
Step 2: 619
4.5 Read Remote Supported Features.....620
Step 1: 620
4.6 Read Remote Extended Features 620
Step 1: 620
4.7 Read Clock Offset.....621
Step 1: 621
4.8 Read Remote Version Information.....621
Step 1: 621
4.9 QOS Setup 622
Step 1: 622
4.10 Switch Role.....622
Step 1a: 622
Step 1b: 623
Step 2: 623
5 Synchronous Connection Establishment and Detachment.....625
5.1 Synchronous Connection Setup 625
Step 1a: 625
Step 1b: 626
Step 1c: 626
Step 1d: 627
Step 1e: 627
Step 2a: 628
Step 2b: 628
Step 3a: 629
Step 3b: 629

6 Sniff, Hold and Park 631
6.1 Sniff Mode 631
Step 1: 631
Step 2: 631
6.2 Hold Mode 632
Step 1a: 632
Step 1b: 632
Step 1c: 633
Step 2: 633
6.3 Park State 634
Step 1a: 634
Step 1b: 634
Step 2: 635
Step 3a: 635
Step 3b: 636
7 Buffer Management, Flow Control 637
Step 1: 637
Step 2: 638
8 Loopback Mode 639
8.1 Local Loopback Mode 639
Step 1: 639
Step 2a: 639
Step 2b: 640
Step 3: 640
8.2 Remote Loopback Mode 641
Step 1: 641
Step 2: 641
Step 3: 642

9 List of Figures 643

1 INTRODUCTION

This section shows typical interactions between Host Controller Interface (HCI) Commands and Events and Link Manager (LM) Protocol Data Units (PDU). It focuses on the message sequence charts (MSCs) for the procedures specified in [3] “Bluetooth Host Controller Interface Functional Specification” with regard to LM Procedures from [2] “Link Manager Protocol”.

This section illustrates only the most useful scenarios, it does not cover all possible alternatives. Furthermore, the message sequence charts do not consider errors over the air interface or host interface. In all message sequence charts it is assumed that all events are not masked, so the Host Controller will not filter out any events.

The sequence of messages in these message sequence charts is for illustrative purposes. The messages may be sent in a different order where allowed by the Link Manager or HCI sections. If any of these charts differ with text in the Baseband, Link Manager, or HCI sections, the text in those sections shall be considered normative. This section is informative.

1.1 NOTATION

The notation used in the message sequence charts (MSCs) consists of ovals, elongated hexagons, boxes, lines, and arrows. The vertical lines terminated on the top by a shadow box and at the bottom by solid oval indicate a protocol entity that resides in a device. MSCs describe interactions between these entities and states those entities may be in.

The following symbols represent interactions and states:

Oval	Defines the context for the message sequence chart.
Hexagon	Indicates a condition needed to start the transactions below this hexagon. The location and width of the Hexagon indicates which entity or entities make this decision.
Box	Replaces a group of transactions. May indicate a user action, or a procedure in the baseband.
Dashed Box	Optional group of transactions.
Solid Arrow	Represents a message, signal or transaction. Can be used to show LMP and HCI traffic. Some baseband packet traffic is also shown. These are prefixed by BB followed by either the type of packet, or an indication that there is an ACK signal in a packet.
Dashed Arrow	Represents a optional message, signal or transaction. Can be used to show LMP and HCI traffic.

1.2 FLOW OF CONTROL

Some message sequences are split into several charts. These charts are marked in sequence with different step numbers with multiple paths through with optional letters after the step numbers. Numbers indicate normal or required ordering. The letters represent alternative paths. For example, Step 4 is after Step 3, and Step 5a could be executed instead of Step 5b.

1.3 EXAMPLE MSC

The protocol entities represented in the example shown in Figure 1.1 on page 600 illustrate the interactions of two devices named A and B. Note that each device includes a Host and a LM entity in this example. Other MSCs in this section may show the interactions of more than two devices.

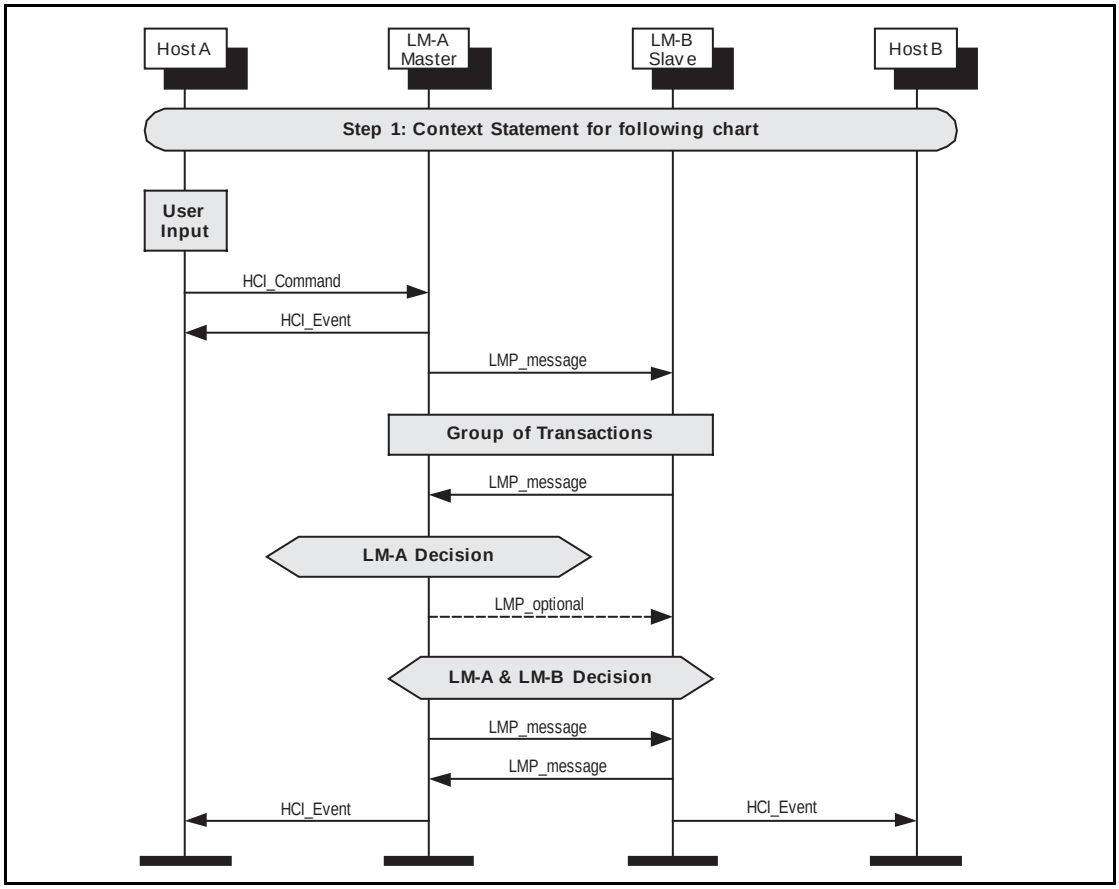

Figure 1.1: Example MSC.

2 SERVICES WITHOUT CONNECTION REQUEST

2.1 REMOTE NAME REQUEST

The service Remote Name Request is used to find out the name of the remote device without requiring an explicit ACL Connection.

Step 1: The host sends an HCI_Remote_Name_Request command expecting that its local device will automatically try to connect to the remote device. (See Figure 2.1 on page 601)

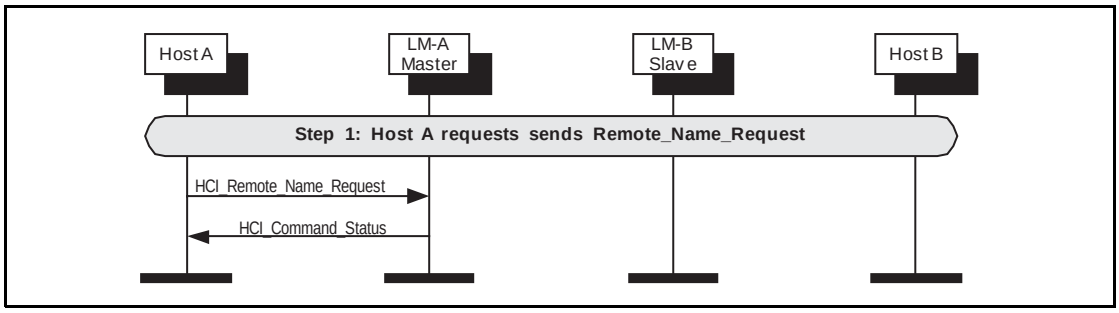

Figure 2.1: Remote name request.

Step 2a: If an ACL Connection does not exist device A pages device B. After the Baseband paging procedure, the local device attempts to get the name, disconnect, and return the name of the remote device to the Host. (See Figure 2.2 on page 601)

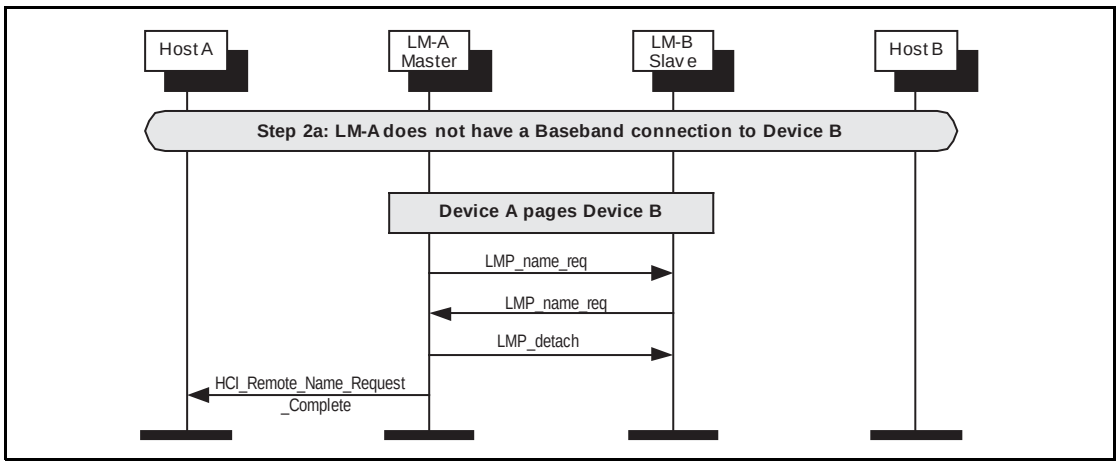

Figure 2.2: Remote name request if no current baseband connection.

Step 2b: If an ACL Connection exists when the request is made, then the Remote Name Request procedure will be executed like an optional service. No Paging and no ACL disconnect is done. (See Figure 2.3 on page 602)

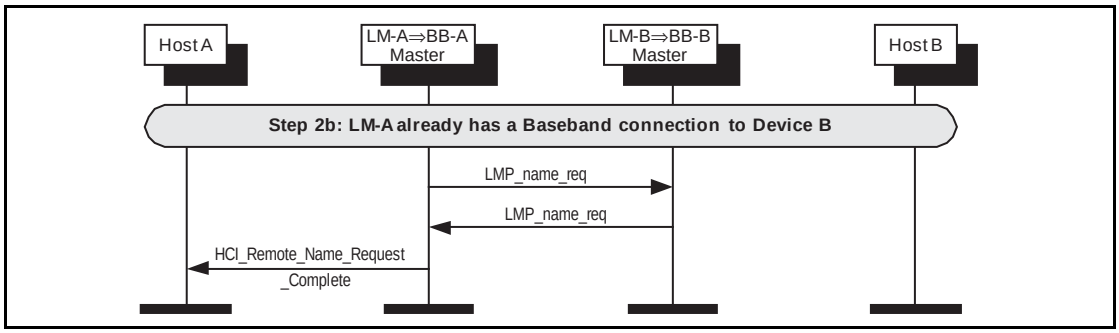

Figure 2.3: Remote name request with baseband connection.

2.2 ONE-TIME INQUIRY

Inquiry is used to detect and collect nearby devices.

Step 1: The host sends an HCI_Inquiry command. (See Figure 2.4 on page 602)

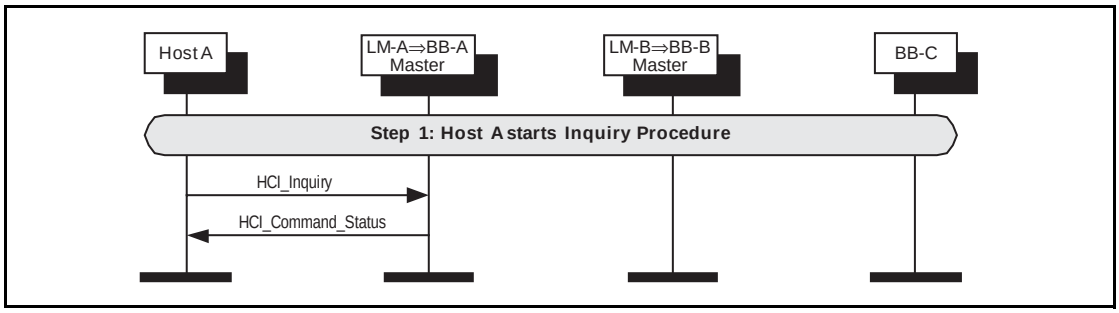

Figure 2.4: Host A starts inquiry procedure.

Step 2: The Controller will start the Baseband inquiry procedure with the specified Inquiry Access Code and Inquiry Length. When Inquiry Responses are received, the Controller extracts the required information and returns the information related to the found devices using one or more Inquiry Result events to the Host. (See Figure 2.5 on page 603)

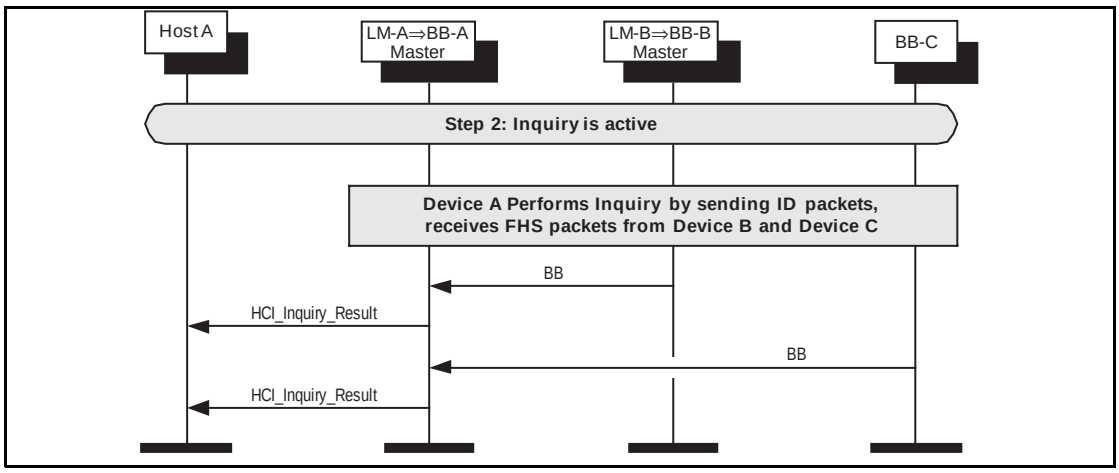

Figure 2.5: LM-A performs inquiry and reports result..

Step 3a: If the host wishes to terminate an Inquiry, the HCI_Inquiry_Cancel command is used to immediately stop the inquiry procedure.
(See Figure 2.6 on page 603)

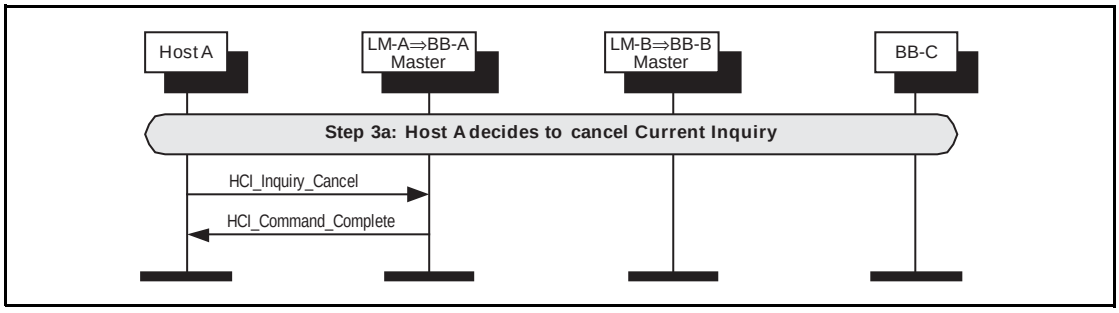

Figure 2.6: Host A cancels inquiry.

Step 3b: If the Inquiry procedure is completed due to the number of results obtained, or the Inquiry Length has expired, an Inquiry Complete event is returned to the Host. (See Figure 2.7 on page 604)

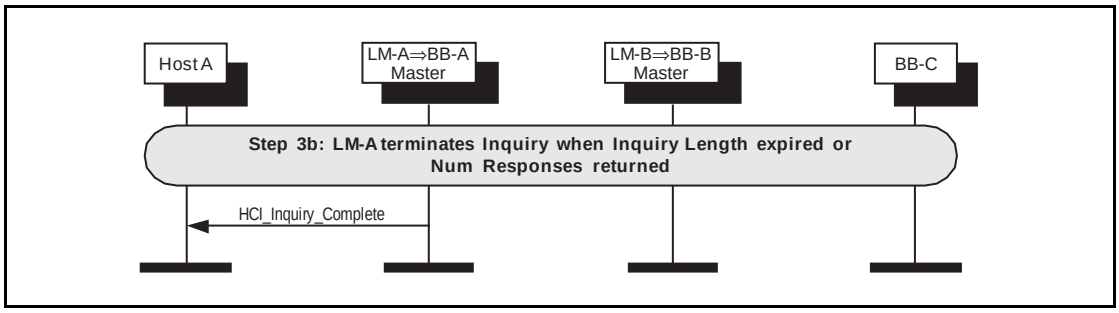

Figure 2.7: LM-A terminates current inquiry.

2.3 PERIODIC INQUIRY

Periodic inquiry is used when the inquiry procedure is to be repeated periodically.

Step 1: The hosts sends an HCI_Periodic_Inquiry_Mode command. (See Figure 2.8 on page 604)

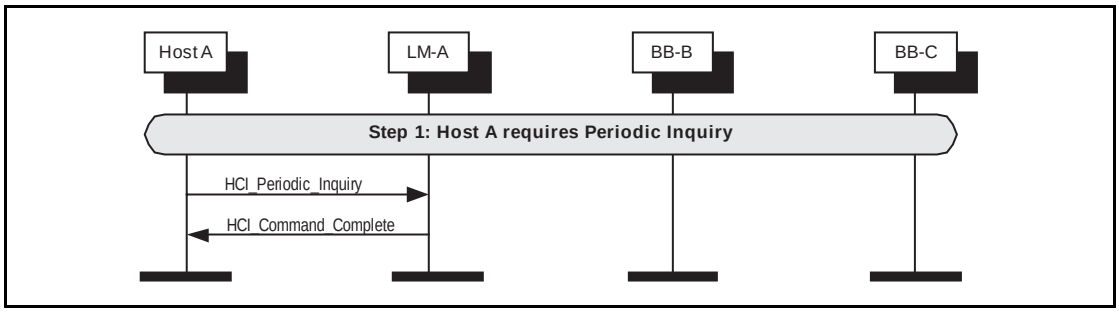

Figure 2.8: Host A starts periodic inquiry.

Step 2: The Controller will start a periodic Inquiry. In the inquiry cycle, one or several Inquiry Result events will be returned. (See Figure 2.9 on page 605)

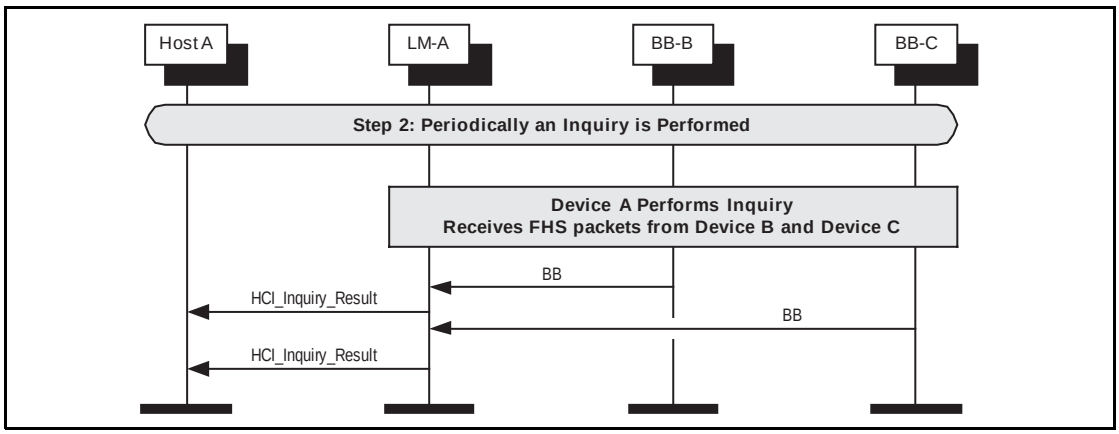

Figure 2.9: LM-A periodically performs an inquiry and reports result.

Step 3: An Inquiry Complete event will be returned to the Host when the current periodic inquiry has finished. (See Figure 2.10 on page 605)

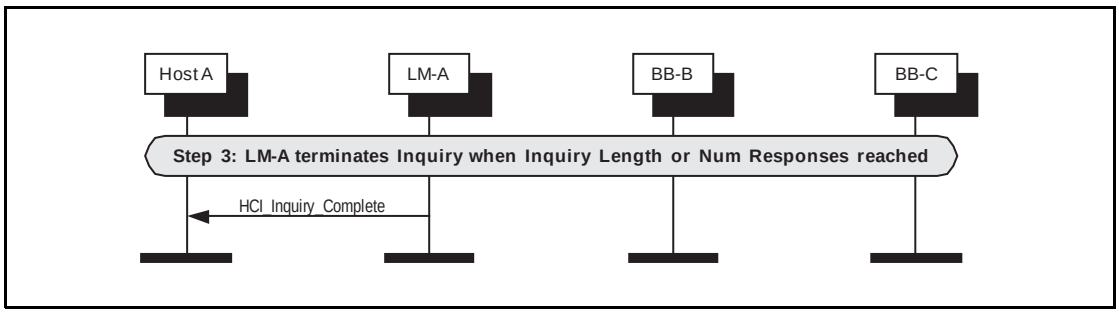

Figure 2.10: LM-A terminates current inquiry.

Step 4: The periodic Inquiry can be stopped using the HCI_Exit_Periodic_Inquiry_Mode command. (See Figure 2.11 on page 605)

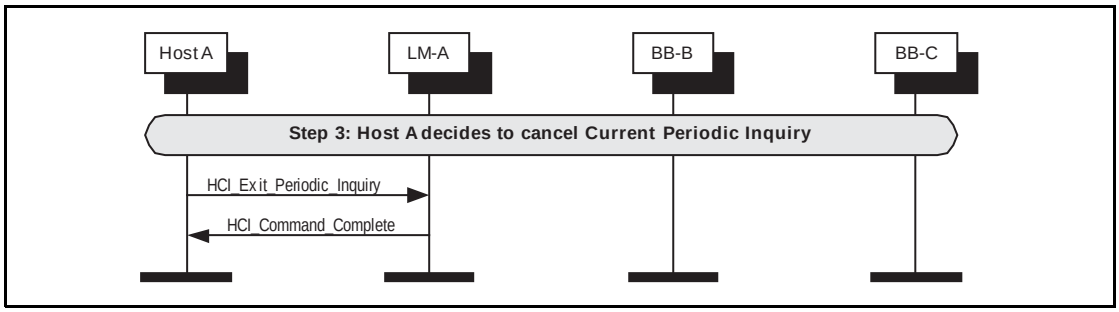

Figure 2.11: Host A decides to exit periodic inquiry.

3 ACL CONNECTION ESTABLISHMENT AND DETACHMENT

A flow diagram of the establishment and detachment of a connection between two devices is shown in Figure 3.1 on page 607. The process is illustrated in 9 distinct steps. A number of these steps may be optionally performed, such as authentication and encryption. Some steps are required, such as the Connection Request and Setup Complete steps. The steps in the overview diagram directly relate to the steps in the following message sequence charts.

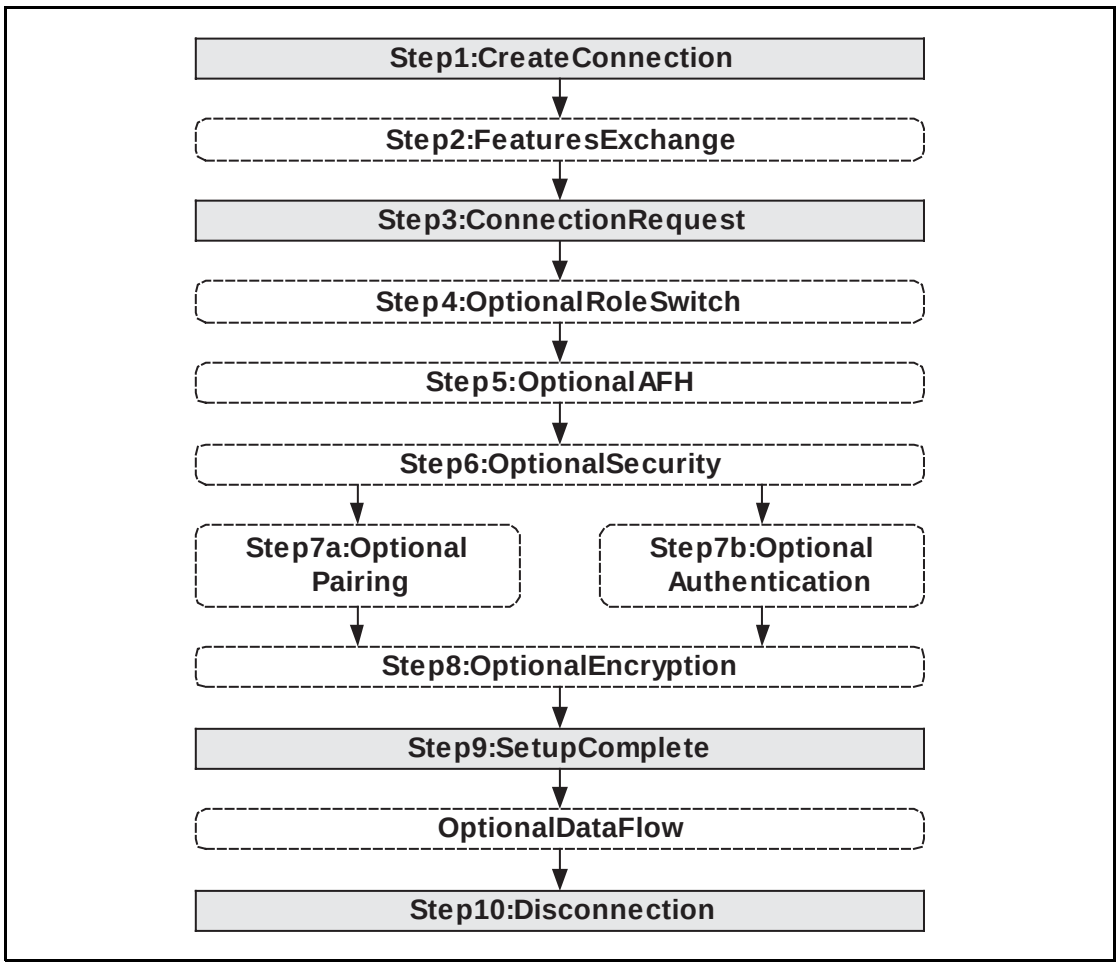

Figure 3.1: Overview diagram for connection setup.

3.1 CONNECTION SETUP

Step 1: The host sends an HCI_Create_Connection command to the Controller. The Controller then performs a Baseband paging procedure with the specified BD_ADDR. (See Figure 3.2 on page 608)

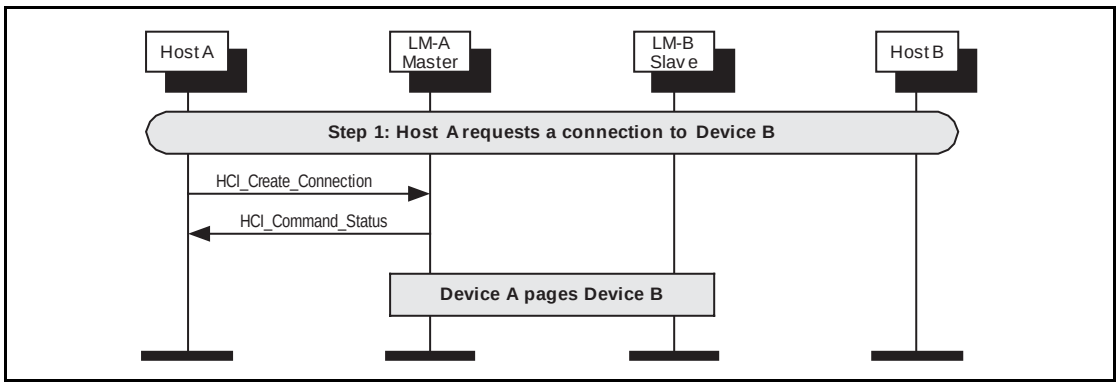

Figure 3.2: Host A requests connection with device B.

Step 2: Optionally, the LM may decide to exchange features. (See Figure 3.3 on page 608)

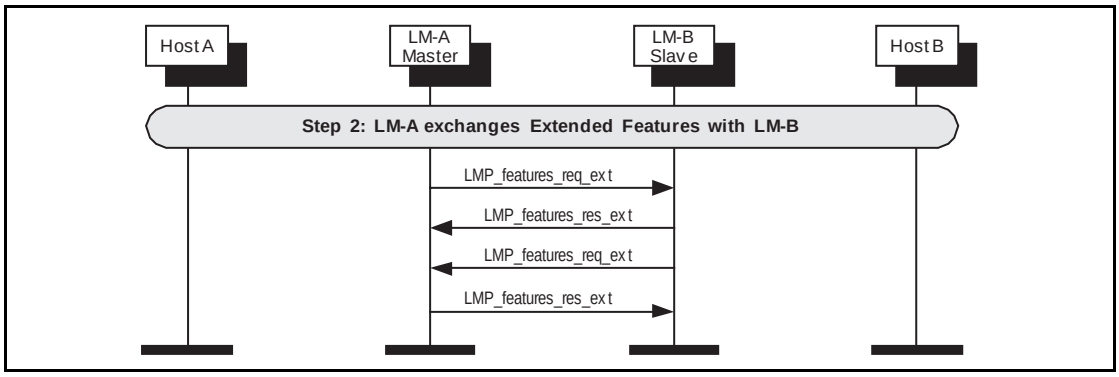

Figure 3.3: LM-A and LM-B exchange features.

Step 3: The LM on the master will request an LMP_host_connection_req PDU. The LM on the slave will then confirm that a connection is OK, and if so, what role is preferred. (See Figure 3.4 on page 608)

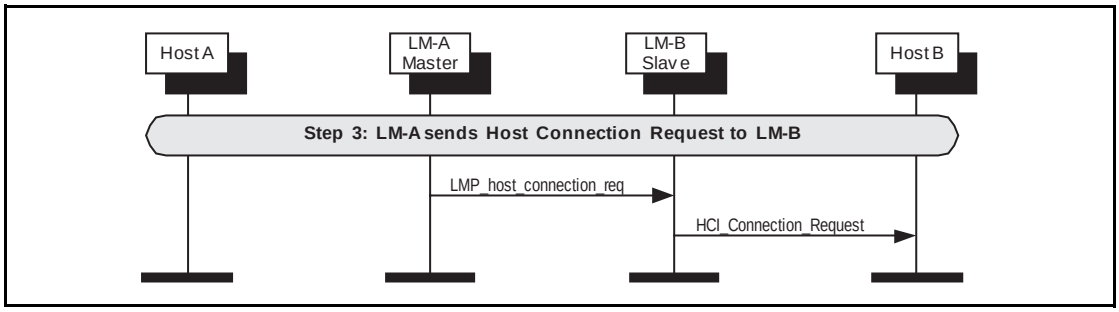

Figure 3.4: LM-A requests host connection.

Step 4a: The remote host rejects this connection, and the link is terminated. (See Figure 3.5 on page 609)

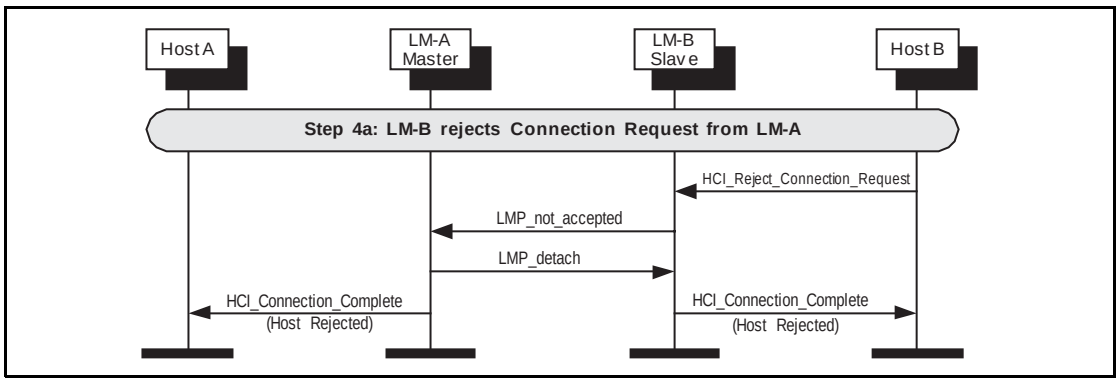

Figure 3.5: Device B rejects connection request.

Step 4b: The remote host accepts this connection. (See Figure 3.6 on page 609)

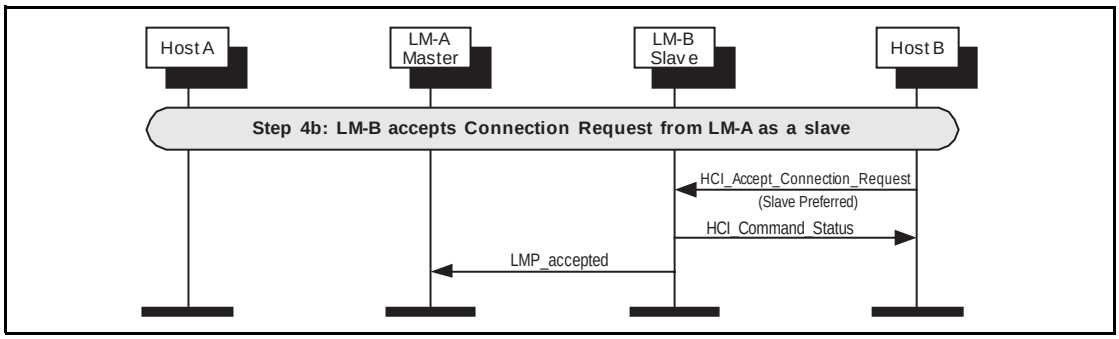

Figure 3.6: Device B accepts connection request.

Step 4c: The remote host accepts this connection but with the preference of being a master. This will cause a role switch to occur before the LMP_accepted for the LMP_host_connection_req PDU is sent. (See Figure 3.7 on page 610)

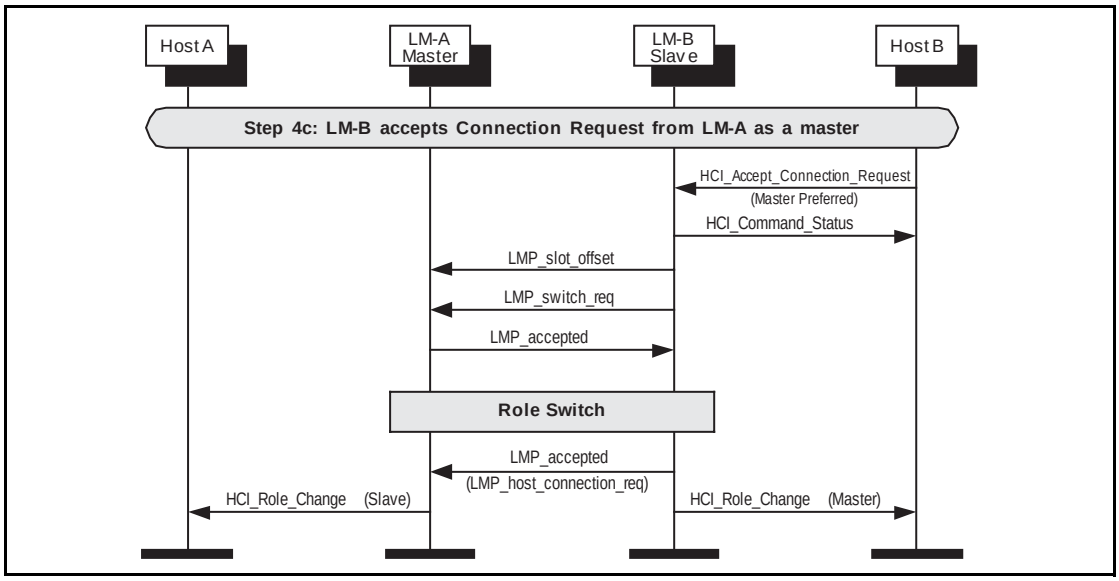

Figure 3.7: Device B accepts connection requests as master.

Step 5: After the features have been exchanged and AFH support is determined to be available, the master may at any time send an LMP_set_AFH and LMP_channel_classification_req PDU. (See Figure 3.8 on page 610)

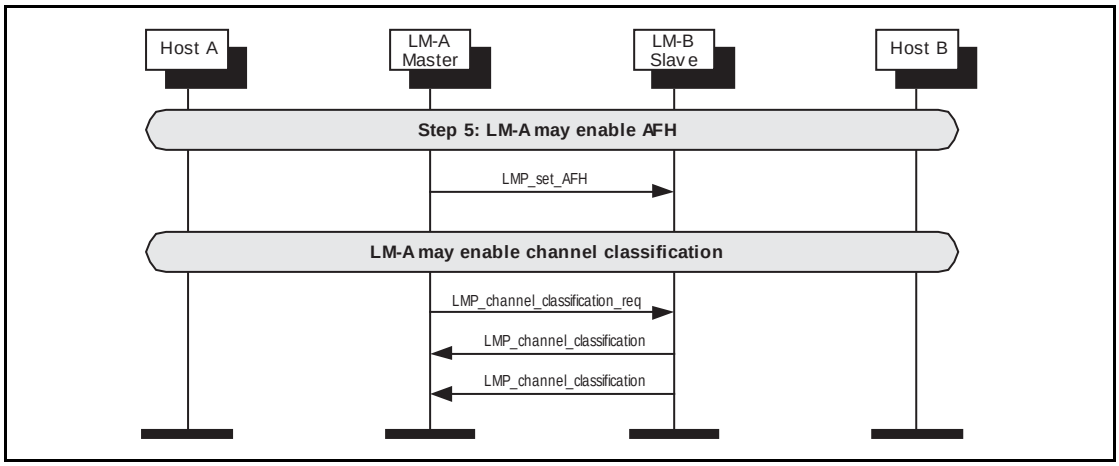

Figure 3.8: LM-A starts adaptive frequency hopping.

Step 6: The LM will request if authentication is required. It does this by requesting the Link Key for this connection from the Host. (See Figure 3.9 on page 611)

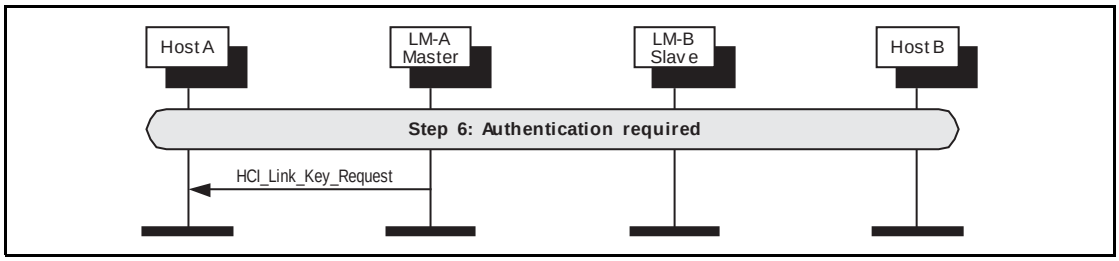

Figure 3.9: Authentication initiated.

Step 7a: If authentication is required by the higher layers and the devices to be connected do not have a common link key, a pairing procedure will be used. The LM will have requested a link key from the host for this connection. If there is a negative reply, then a PIN code will be requested. This PIN code will be requested on both sides of the connection, and authentication performed based on this PIN code. The last step is for the new link key for this connection is passed to the host so that it may store it for future connections.
(See Figure 3.10 on page 612)

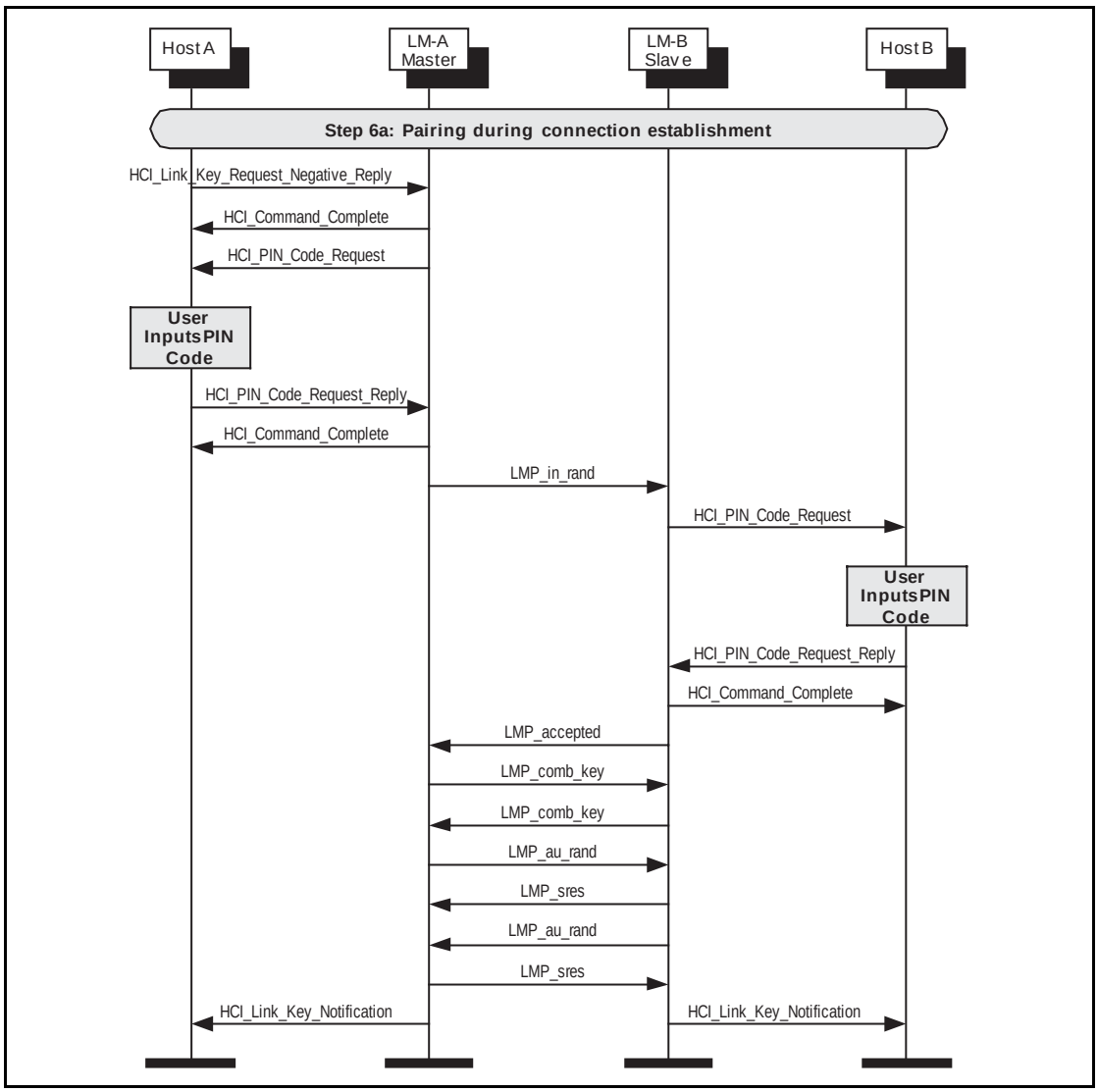

Figure 3.10: Pairing during connection setup.

Step 7b: If a common link key exists between the devices, then pairing is not needed. The LM will have asked for a link key from the host for this connection. If this is a positive reply, then the link key is used for authentication. If the configuration parameter Authentication_Enable is set, then the authentication procedure must be executed. This MSC only shows the case when Authentication_Enable is set on both sides. (See Figure 3.11 on page 613)

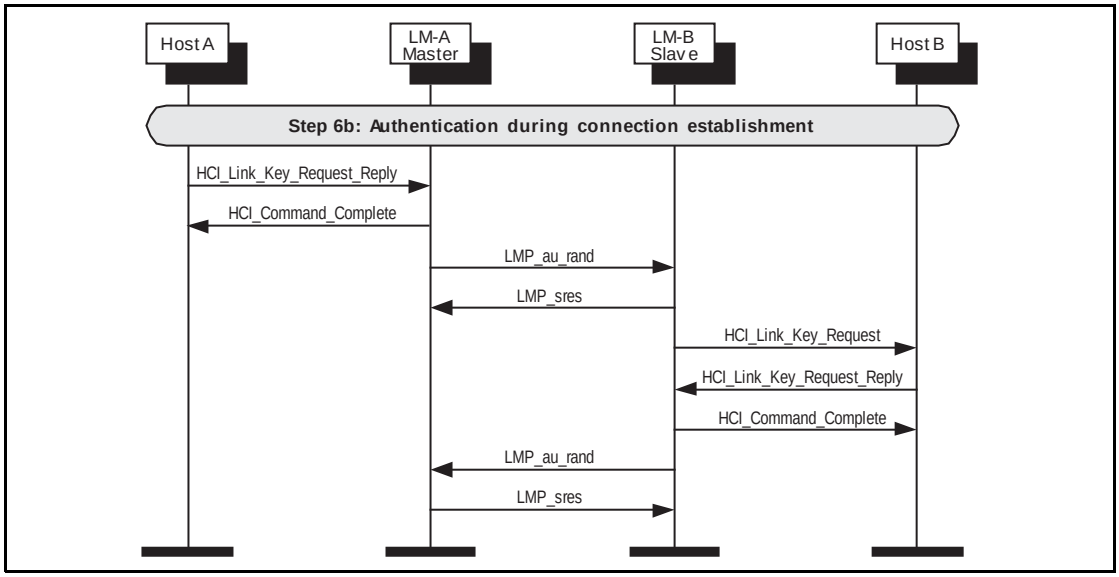

Figure 3.11: Authentication during connection setup.

Step 8: Once the pairing or authentication procedure is successful, the encryption procedure may be started. This MSC only shows the set up of an encrypted point-to-point connection. (See Figure 3.12 on page 613)

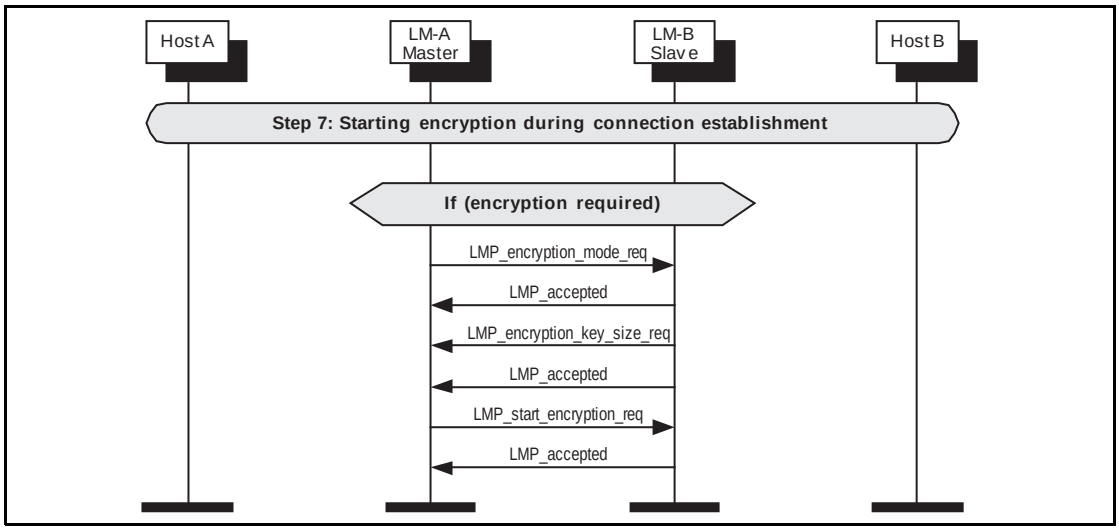

Figure 3.12: Starting encryption during connection setup.

Step 9: The LM's indicate that the connection is setup by sending LMP_setup_complete PDU. This will cause the Host to be notified of the new connection handle, and this connection may be used to send higher layer data such as L2CAP information. (See Figure 3.13 on page 614)

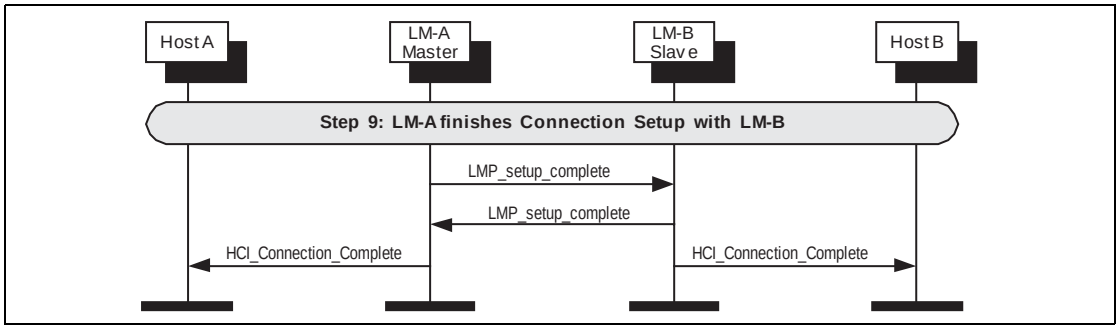

Figure 3.13: LM-A and LM-B finishes connection setup.

Step 10: Once the connection is no longer needed, either device may terminate the connection using the HCI_Disconnect command and LMP_detach message PDU. The disconnection procedure is one-sided and does not need an explicit acknowledgment from the remote LM. The use of ARQ Acknowledgment from the Baseband is needed to ensure that the remote LM has received the LMP_detach PDU. (See figure Figure 3.13 on page 614)

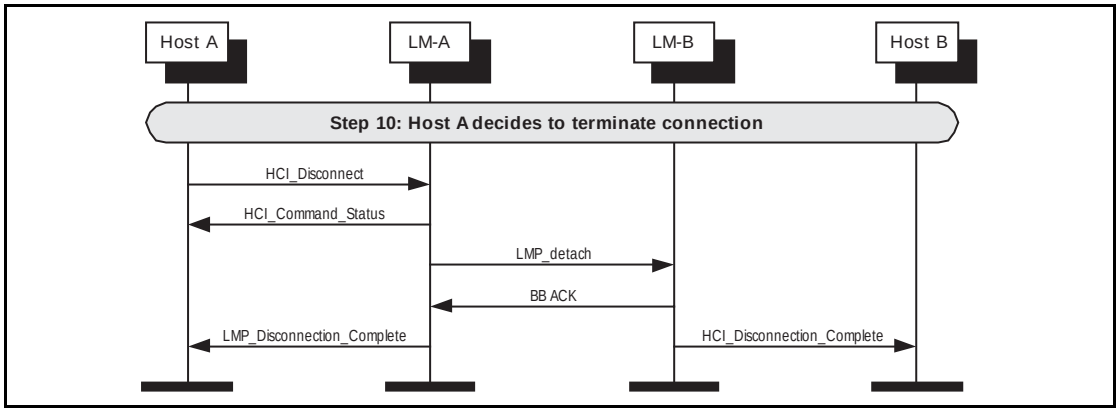

Figure 3.14: Host A decides to disconnect.

4 OPTIONAL ACTIVITIES AFTER ACL CONNECTION ESTABLISHMENT

4.1 AUTHENTICATION REQUESTED

Step 1: Authentication can be explicitly executed at any time after a connection has been established. If no Link Key is available then the Link Key is required from the Host. (See Figure 4.1 on page 615)

Note: If the Controller or LM and the Host do not have the Link Key a PIN Code Request event will be sent to the Host to request a PIN Code for pairing. A procedure identical to that used during Connection Setup (Section 3.1, Step 7a:) will be used. (See Figure 3.9 on page 611)

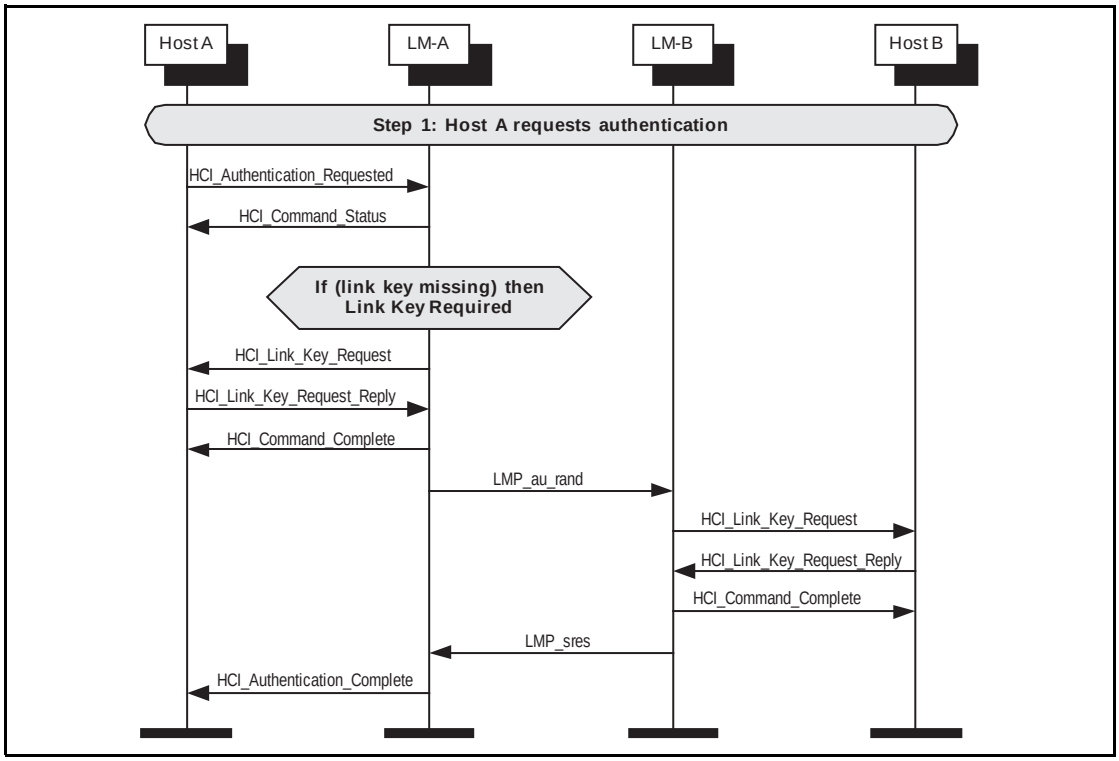

Figure 4.1: Authentication requested.

4.2 SET CONNECTION ENCRYPTION

Step 1: The host may at any time turn on encryption using the HCI_Set_Connection_Encryption command. This command can be originated from either the master or slave sides. Only the master side is shown in figure 4.2. If this command is sent from a slave, the only difference is that the LMP_encryption_mode_req PDU will be sent from the slave. The LMP_encryption_key_size_req and LMP_start_encryption_req PDUs will always be requested from the master. (See Figure 4.2 on page 616)

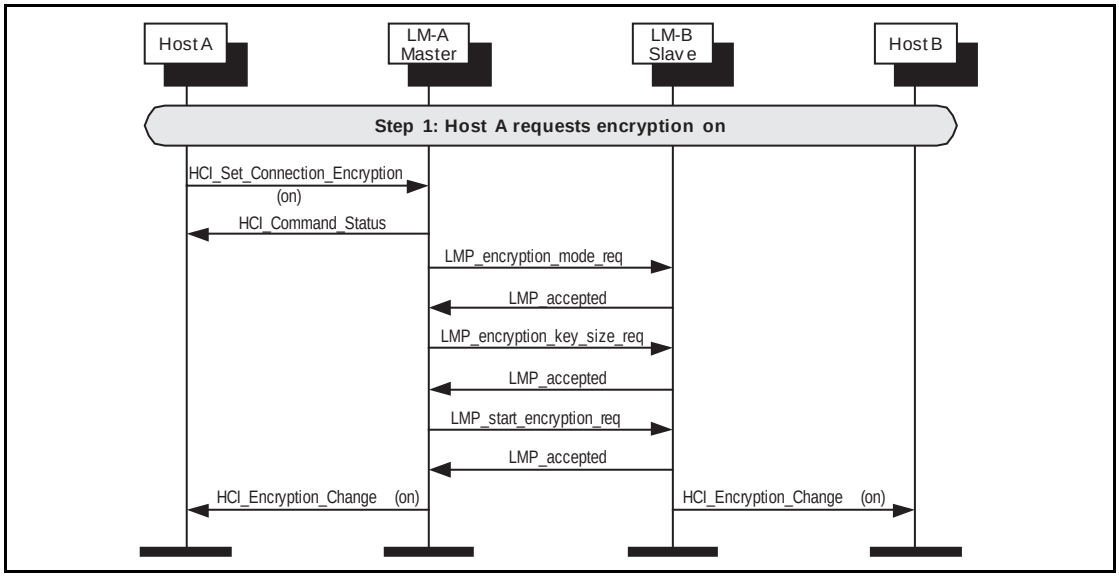

Figure 4.2: Encryption requested.

Step 2: To terminate the use of encryption, The HCI_Set_Connection_Encryption command is used. (See Figure 4.3 on page 616)

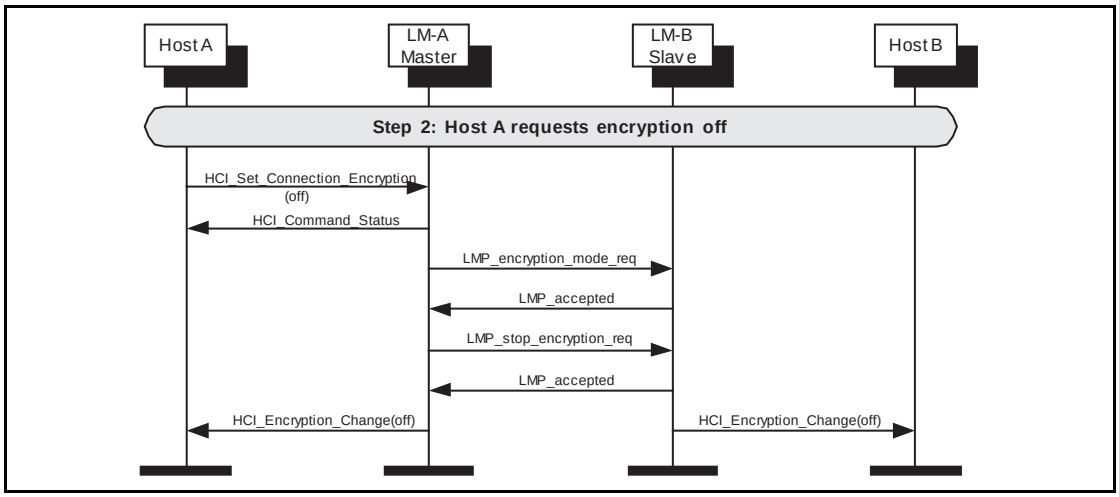

Figure 4.3: Encryption off requested.

4.3 CHANGE CONNECTION LINK KEY

Step 1: The master host (Host A) may change the connection link key using the HCI_Change_Connection_Link_Key command. A new link key will be generated and the hosts will be notified of this new link key. (See Figure 4.4 on page 617).

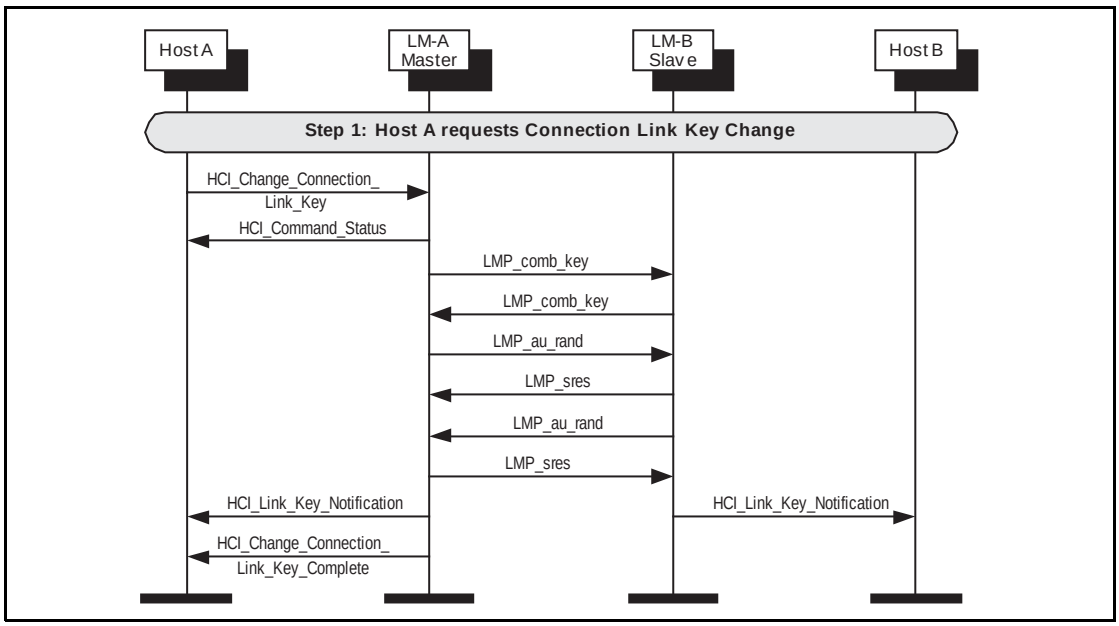

Figure 4.4: Change connection link key.

4.4 MASTER LINK KEY

Step 1: The host changes to a Master Link Key from a Semi-permanent Link Key using the HCI_Master_Link_Key command. (See Figure 4.5 on page 618)

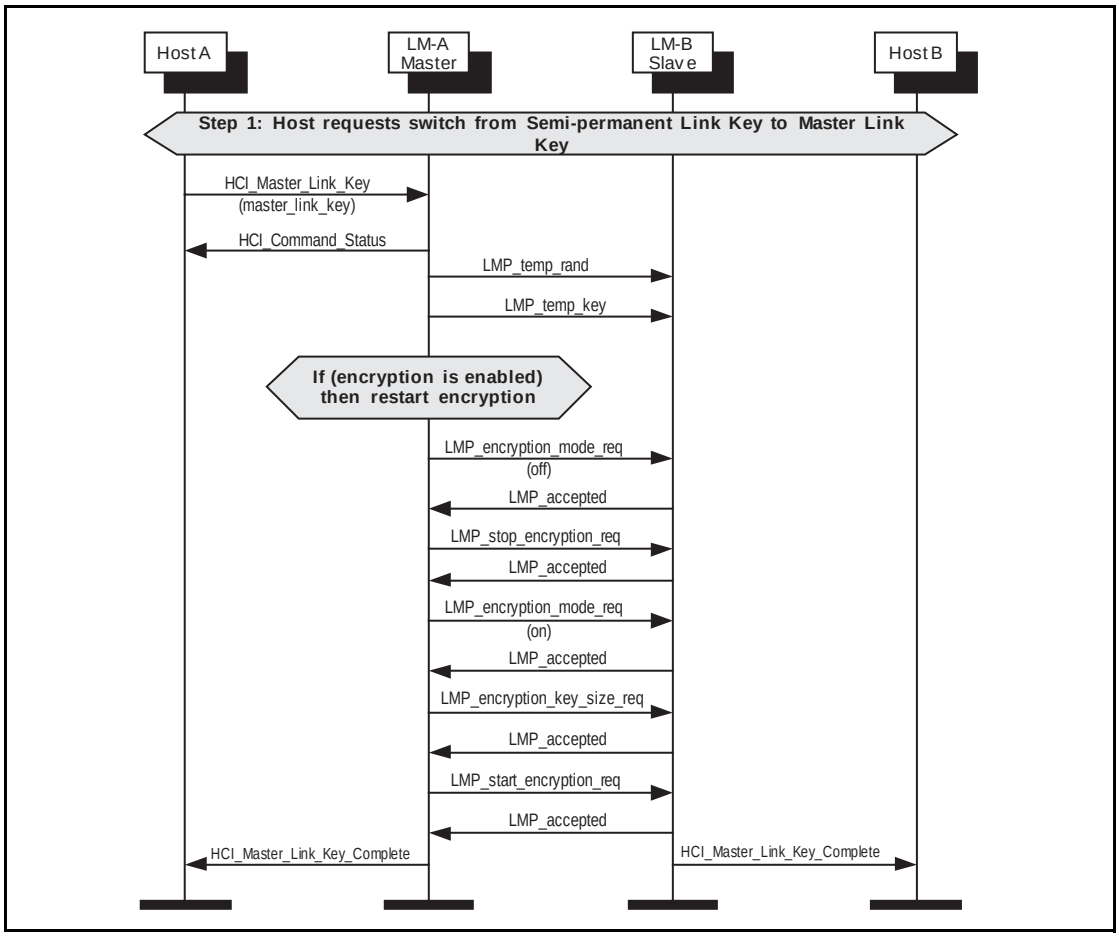

Figure 4.5: Change to master link key.

Step 2: The host changes to a Semi-permanent Link Key from a Master Link Key using the HCI_Master_Link_Key command. (See Figure 4.6 on page 619)

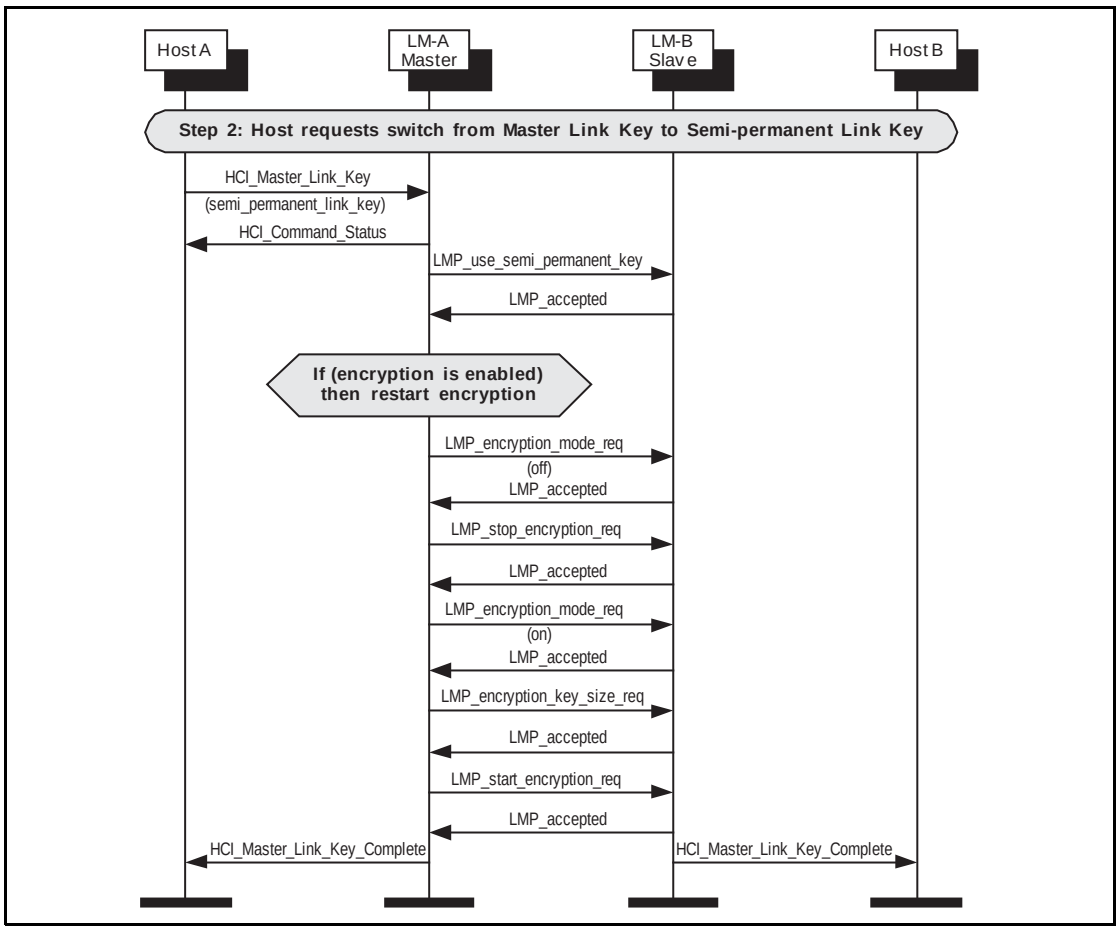

Figure 4.6: Change to semi permanent link key.

4.5 READ REMOTE SUPPORTED FEATURES

Using the HCI_Read_Remote_Supported_Features command the supported LMP Features of a remote device can be read. (See Figure 4.7 on page 620)

If the remote supported features have been obtained previously then the Controller may return them without sending any LMP PDUs.

Step 1: The host requests the supported features of a remote device.

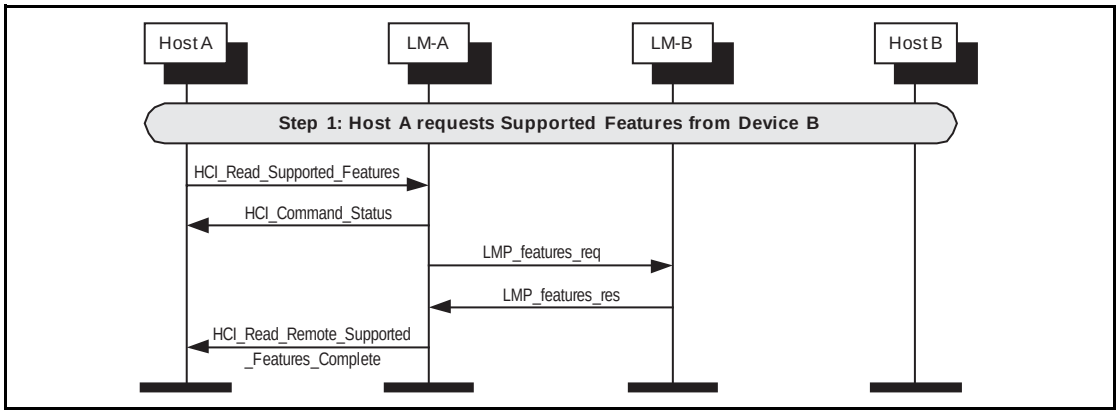

Figure 4.7: Read remote supported features.

4.6 READ REMOTE EXTENDED FEATURES

Using the HCI_Read_Remote_Extended_Features command the extended LMP features of a remote device can be read. (See Figure 4.8 on page 620)

If the remote extended features have been obtained previously then the Controller may return them without sending any LMP PDUs.

Step 1: The host requests the extended features of a remote device.

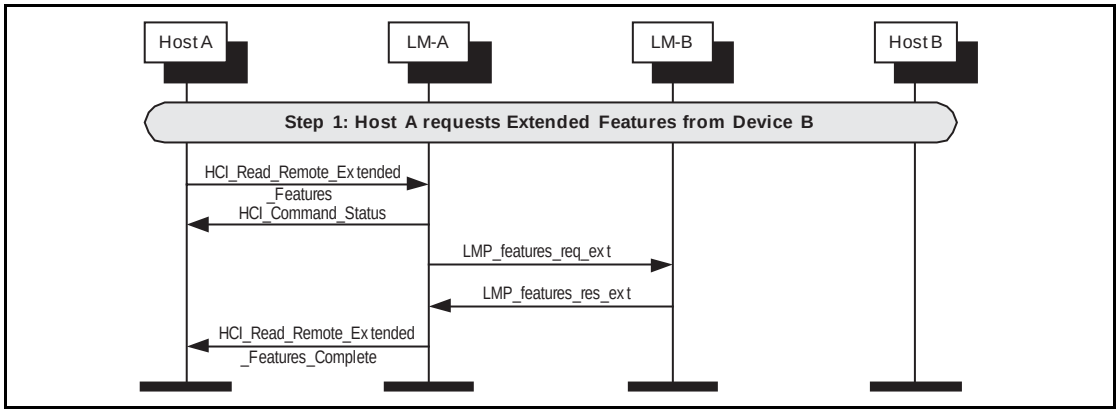

Figure 4.8: Read remote extended features.

4.7 READ CLOCK OFFSET

Using the HCI_Read_Clock_Offset command the device acting as the master can read the Clock Offset of a slave. The Clock Offset can be used to speed up the paging procedure in a later connection attempt. If the command is requested from the slave device, the Controller will directly return a Command Status event and a Read Clock Offset Complete event without sending any LMP PDUs. (See Figure 4.9 on page 621)

Step 1: The host requests the clock offset of a remote device.

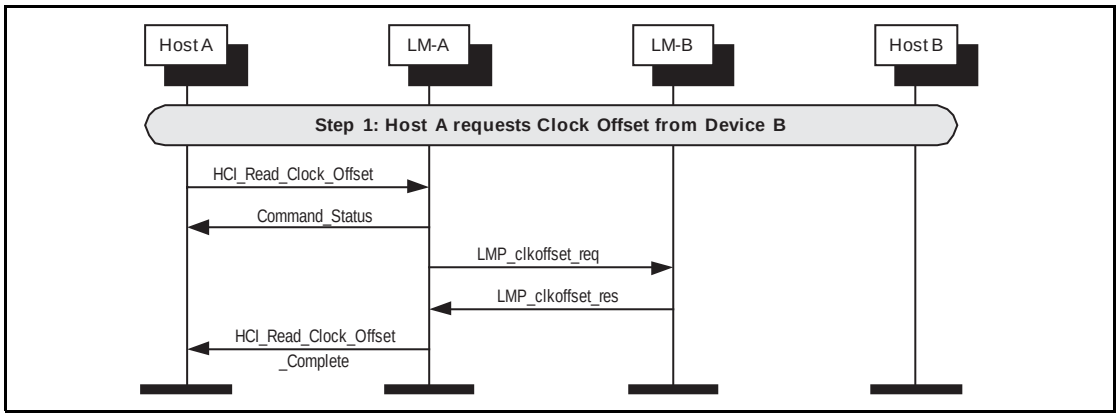

Figure 4.9: Read clock offset.

4.8 READ REMOTE VERSION INFORMATION

Using the HCI_Read_Remote_Version_Information command the version information of a remote device can be read. (See Figure 4.10 on page 621)

If the remote version information has been obtained previously then the Controller may return them without sending any LMP PDUs.

Step 1: The host requests the version information of a remote device.

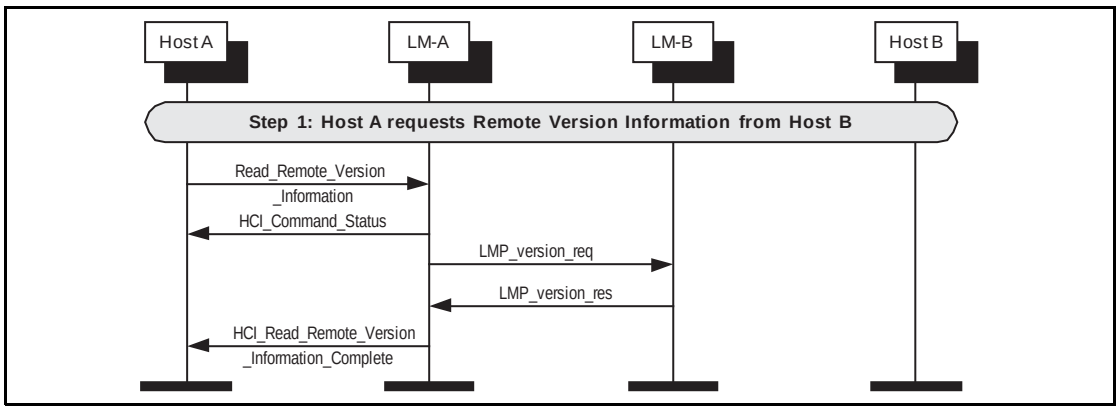

Figure 4.10: Read remote version information.

4.9 QOS SETUP

Using the HCI_Flow_Specification command the Quality of Service (QoS) and Flow Specification requirements of a connection can be notified to a Controller. The Controller may then change the quality of service parameters with a remote device. (See Figure 4.11 on page 622)

Step 1: The host sends QoS parameters to a remote device.

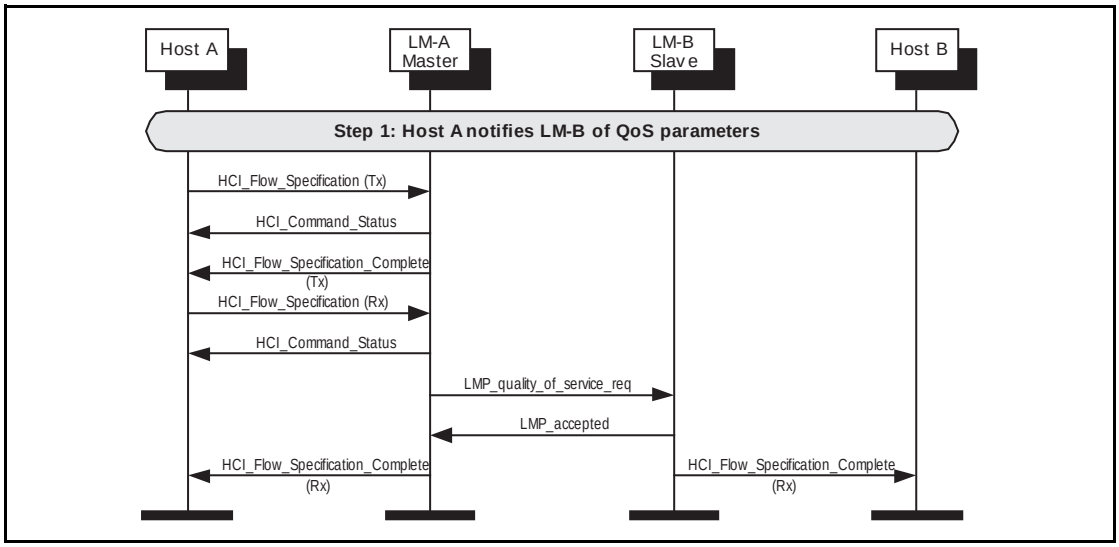

Figure 4.11: QoS flow specification.

4.10 SWITCH ROLE

The HCI_Switch_Role command can be used to explicitly switch the current master / slave role of the local device with the specified device.

Step 1a: The master host (A) requests a role switch with a slave. This will send the switch request, and the slave will respond with the slot offset and accepted. (See Figure 4.12 on page 622)

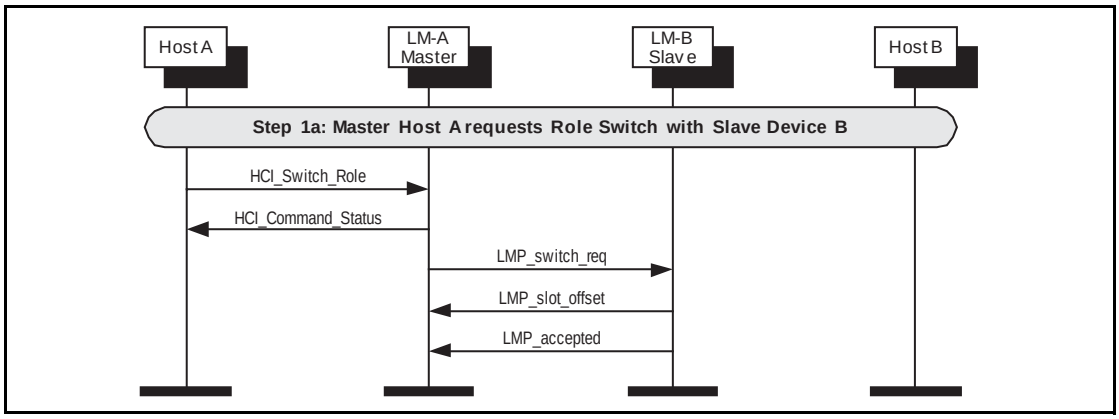

Figure 4.12: Master requests role switch.

Step 1b: The slave host (B) requests a role switch with a master. This will send the slot offset and the switch request, and the master will respond with a LMP_accepted PDU. (See Figure 4.13 on page 623)

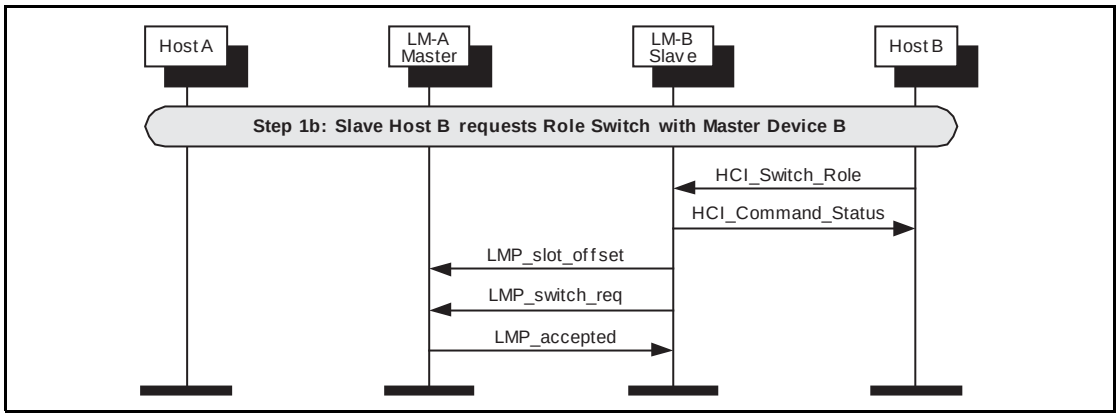

Figure 4.13: Slave requests role switch.

Step 2: The role switch is performed by doing the TDD switch and piconet switch. Finally an HCI_Role_Change event is sent on both sides.
(See Figure 4.14 on page 623)

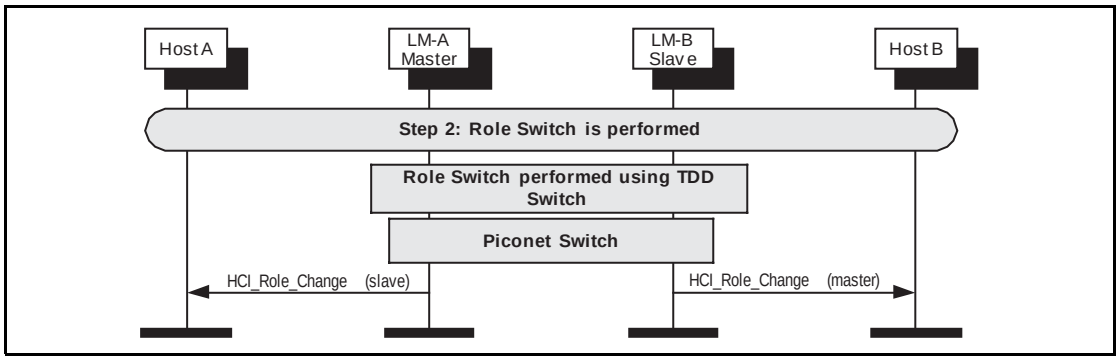

Figure 4.14: Role switch is performed.

5 SYNCHRONOUS CONNECTION ESTABLISHMENT AND DETACHMENT

5.1 SYNCHRONOUS CONNECTION SETUP

Using the HCI_Setup_Synchronous_Connection command, a host can add a synchronous logical channel to the link. A synchronous logical link can be provided by creating a SCO or an eSCO logical transport.

Note: An ACL Connection must be established before a synchonous connection can be created.

Step 1a: Master device requests a synchronous connection with a device. (See Figure 5.1 on page 625)

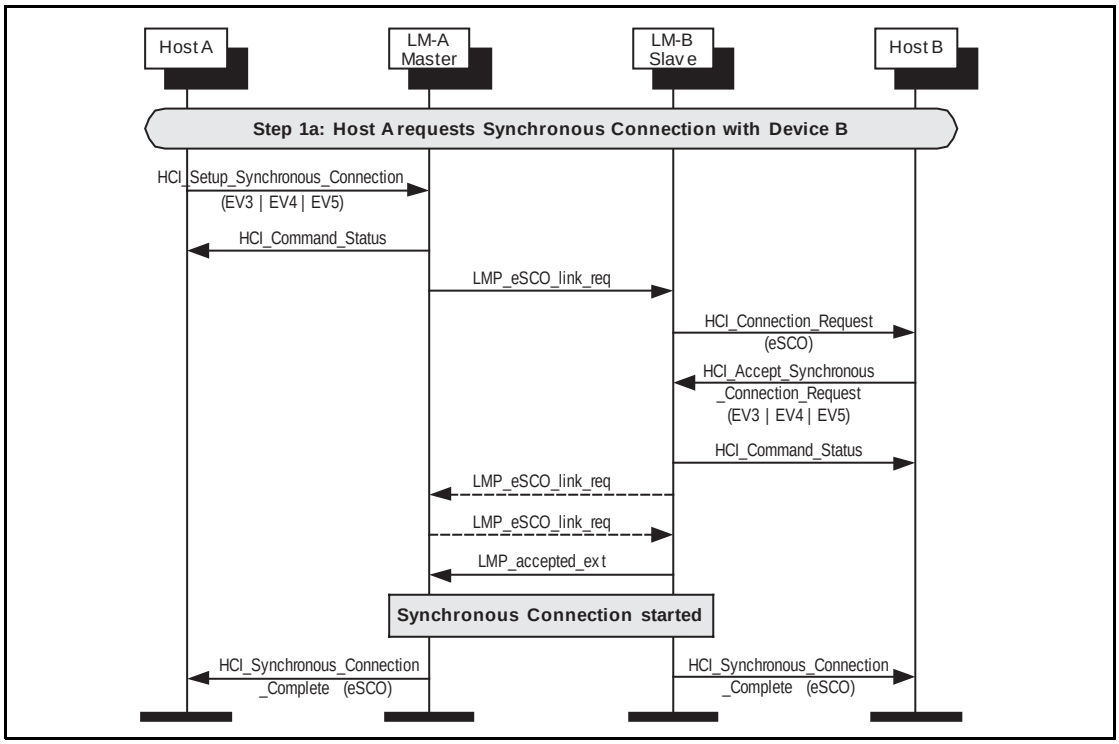

Figure 5.1: Master requests synchronous EV3, EV4 OR EV5 connection.

Step 1b: Slave device requests a synchronous connection with a device.
(See Figure 5.2 on page 626)

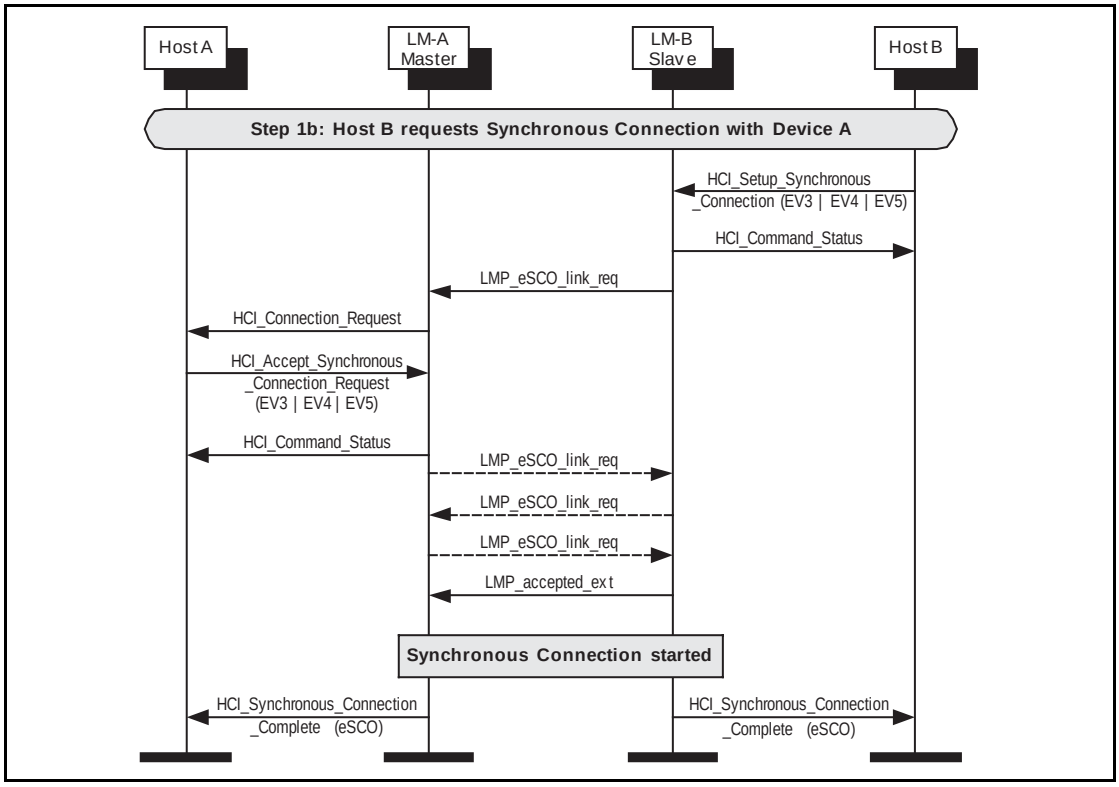

Figure 5.2: Slave requests synchronous EV3, EV4 OR EV5 connection.

Step 1c: Master device requests a SCO connection with a device.
(See Figure 5.3 on page 626)

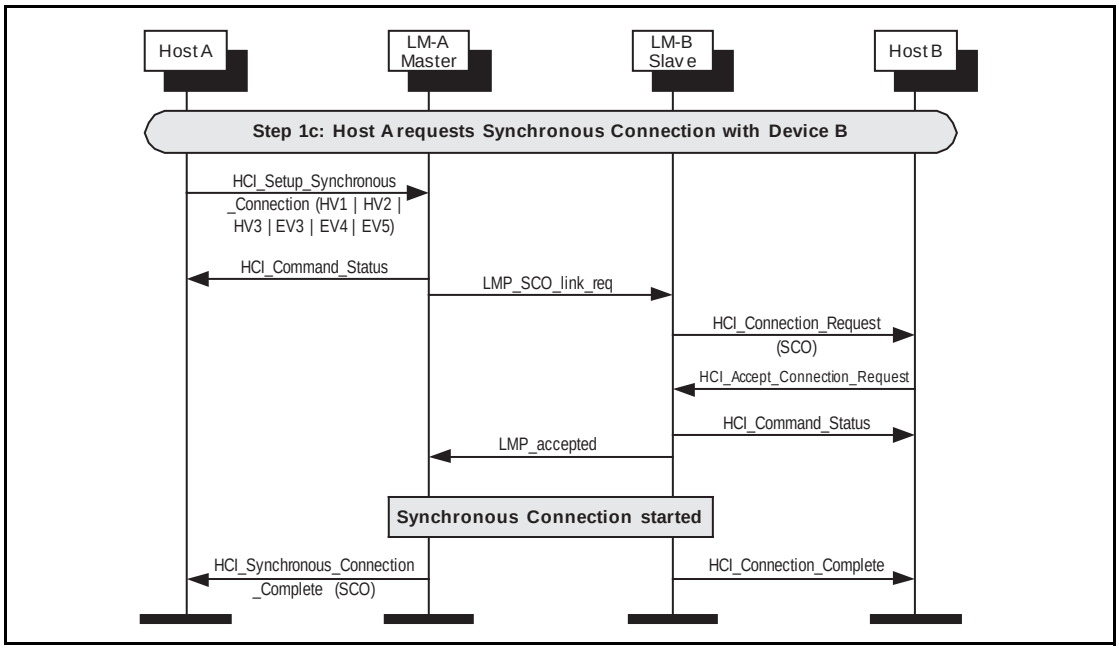

Figure 5.3: Master requests synchronous connection using SCO.

Step 1d: Master device requests a SCO connection with a device.
(See Figure 5.4 on page 627)

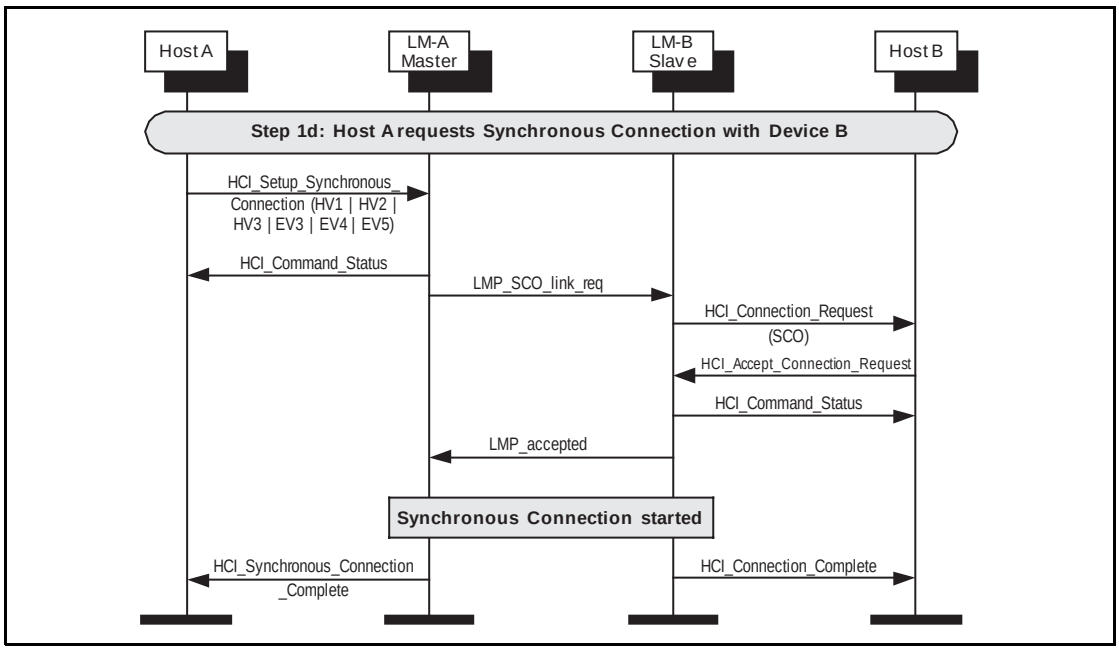

Figure 5.4: Master requests synchronous connection with legacy slave.

Step 1e: Host device requests a SCO connection with a device.
(See Figure 5.5 on page 627)

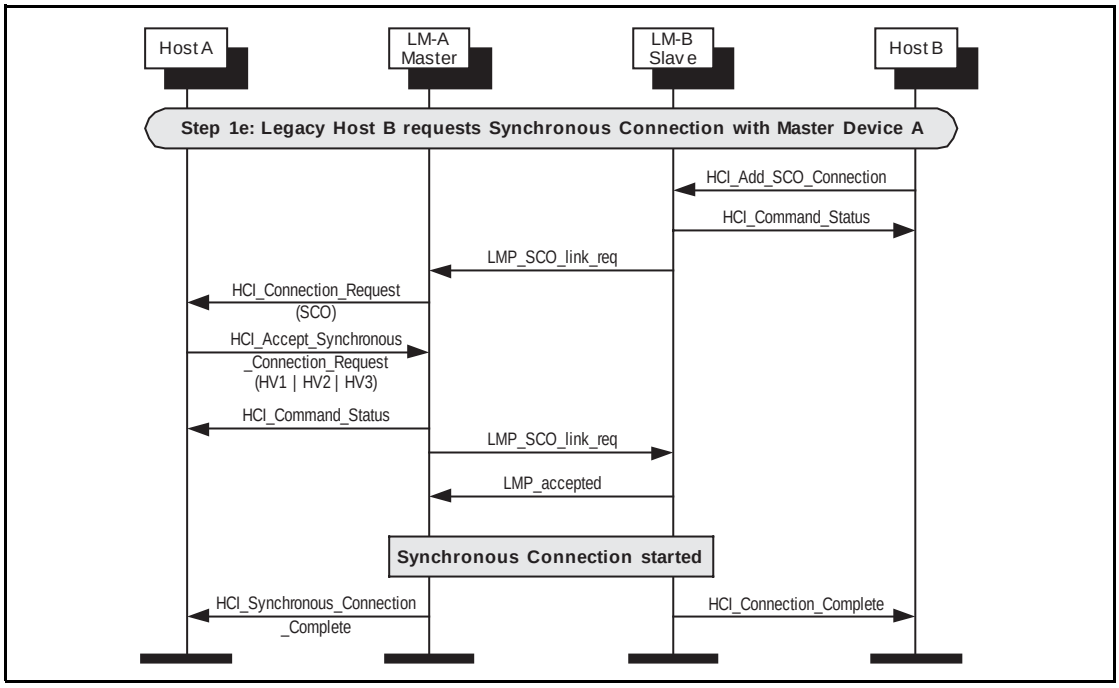

Figure 5.5: Any device that supports only SCO connections requests a synchronous connection with a device.

Step 2a: Master renegotiates eSCO connection (See Figure 5.6 on page 628).

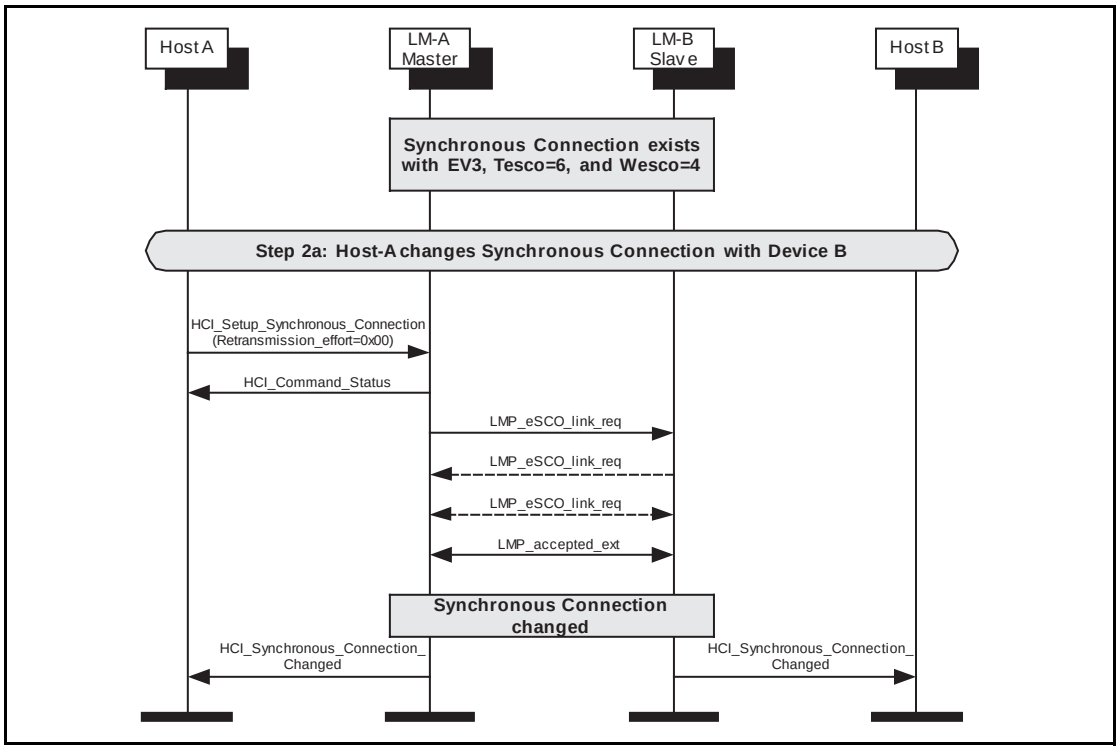

Figure 5.6: Master renegotiates eSCO connection.

Step 2b: Slave renegotiates eSCO connection (See Figure 5.7 on page 628).

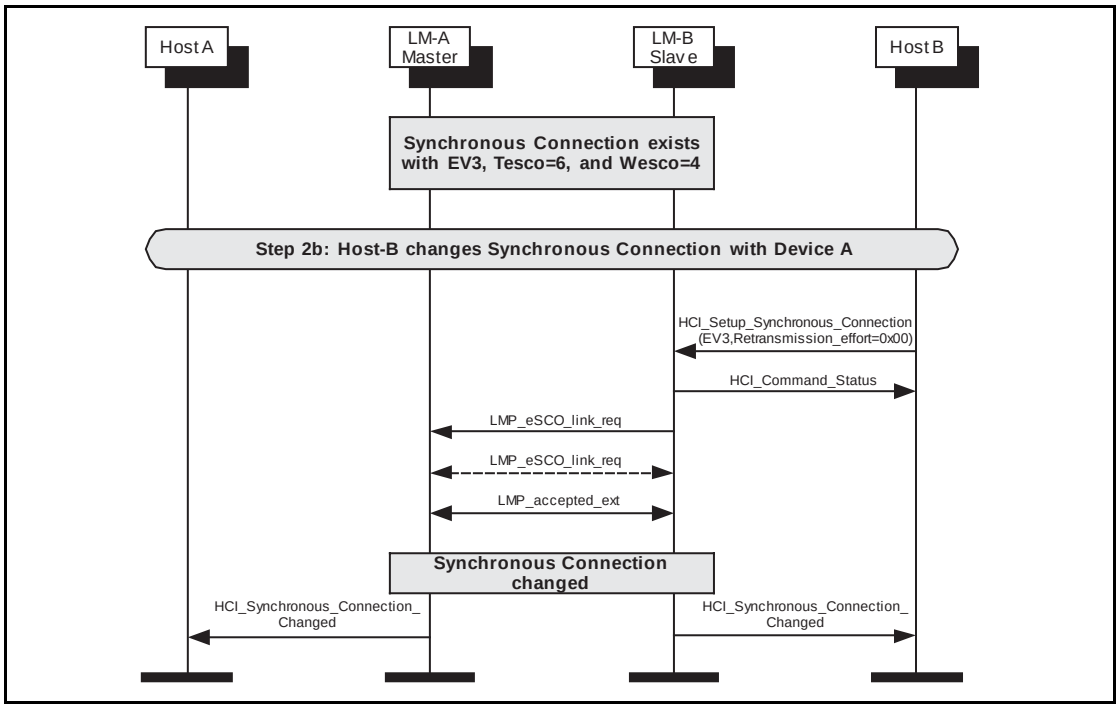

Figure 5.7: Slave renegotiates eSCO connection.

Step 3a: eSCO Disconnection. (See Figure 5.8 on page 629)

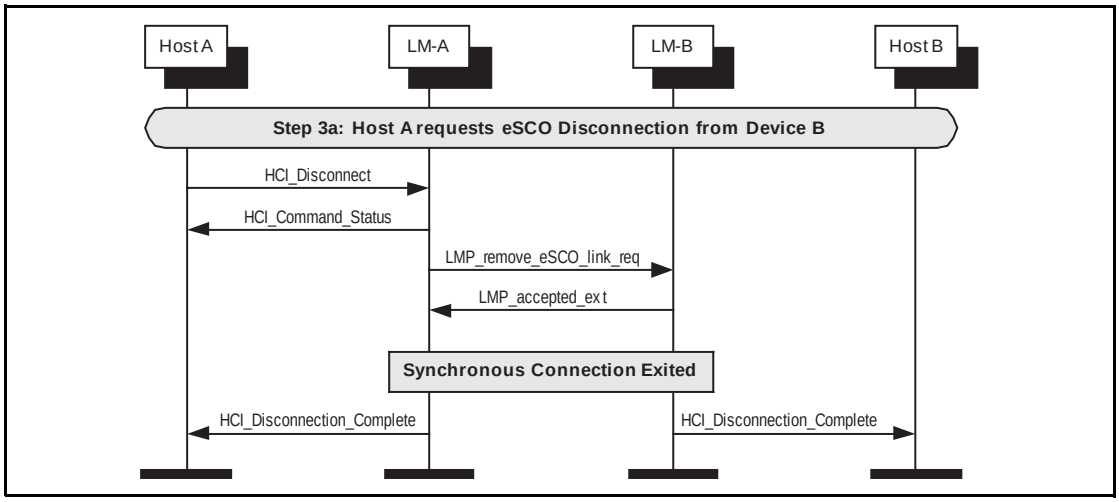

Figure 5.8: Synchronous disconnection of eSCO connection.

Step 3b: SCO Disconnection. (See Figure 5.9 on page 629)

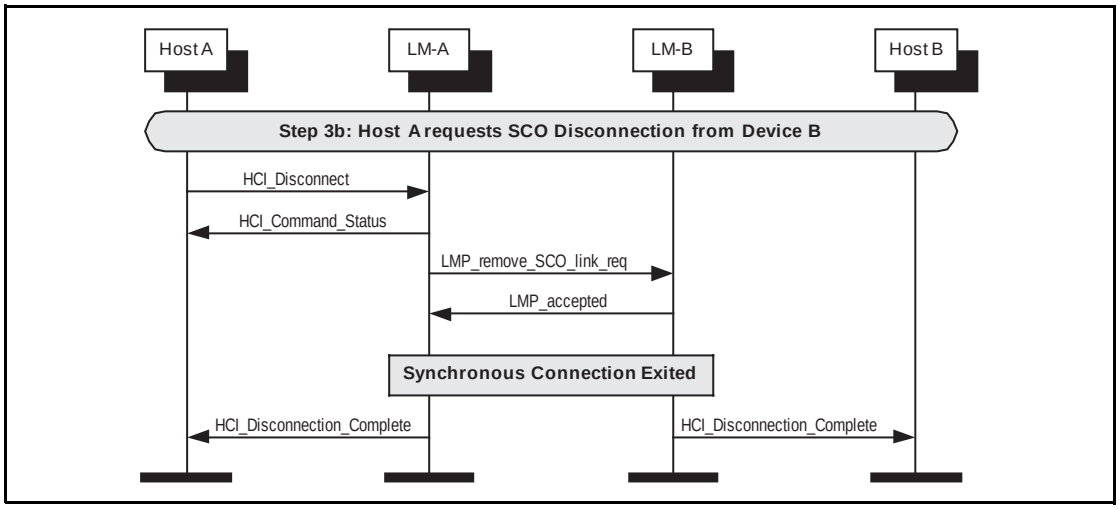

Figure 5.9: Synchronous disconnection of SCO connection.

6 SNIFF, HOLD AND PARK

Entry into sniff mode, hold mode or park state requires an established ACL Connection.

6.1 SNIFF MODE

The HCI_Sniff_Mode command is used to enter sniff mode. The HCI_Exit_Sniff_Mode command is used to exit sniff mode.

Step 1: Host requests to enter sniff mode. Multiple LMP_sniff_req PDUs may be sent as the parameters for sniff mode are negotiated.
(See Figure 6.1 on page 631)

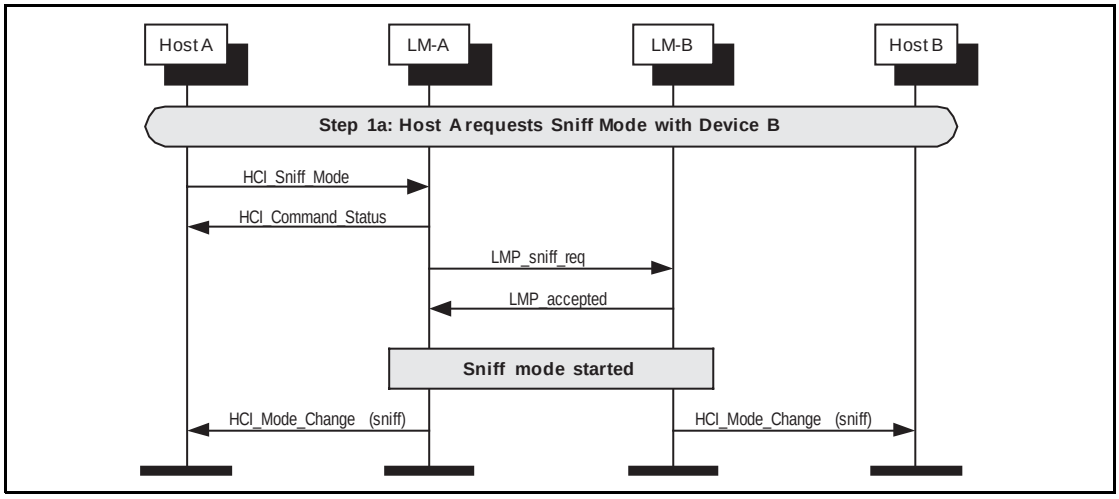

Figure 6.1: Sniff mode request.

Step 2: Host requests to exit sniff mode. (See Figure 6.2 on page 631)

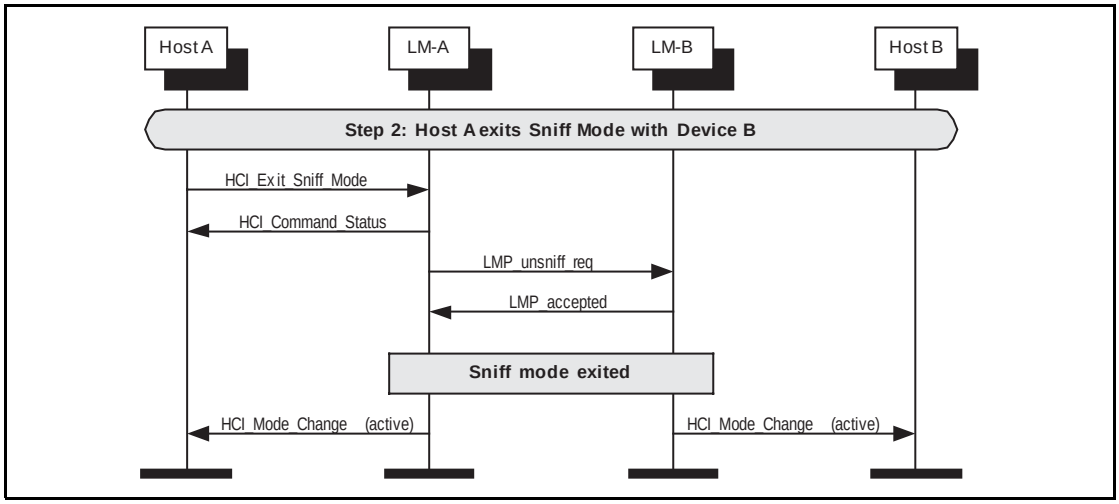

Figure 6.2: Exit sniff mode request.

6.2 HOLD MODE

The HCI_Hold_Mode command can be used to place a device into hold mode. The Controller may do this by either negotiating the hold mode parameters or forcing hold mode. Hold mode will automatically end after the negotiated length of time.

Step 1a: A host requests hold mode. (See Figure 6.3 on page 632)

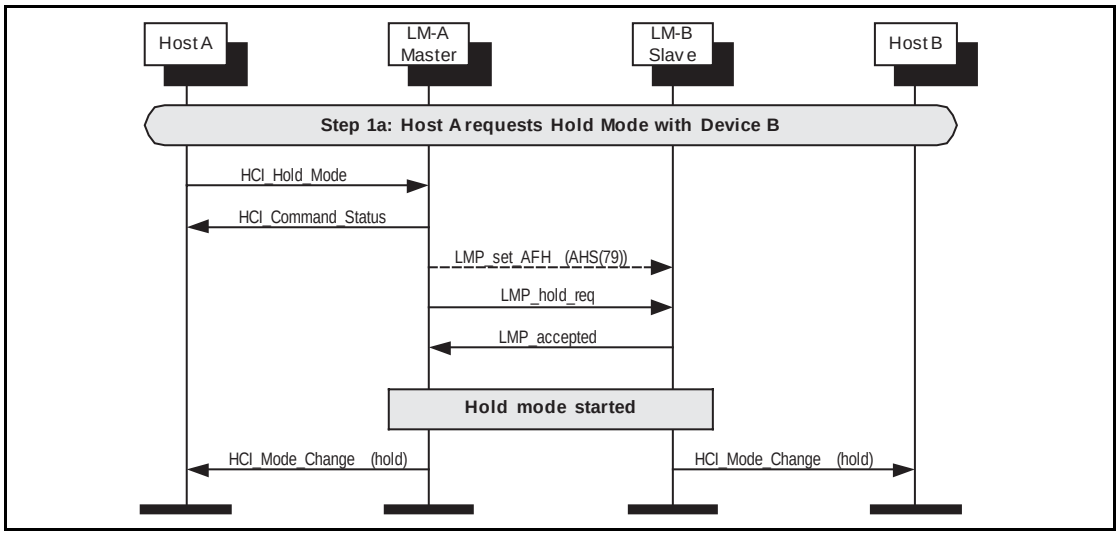

Figure 6.3: Hold request.

Step 1b: A host may force hold mode. (See Figure 6.4 on page 632)

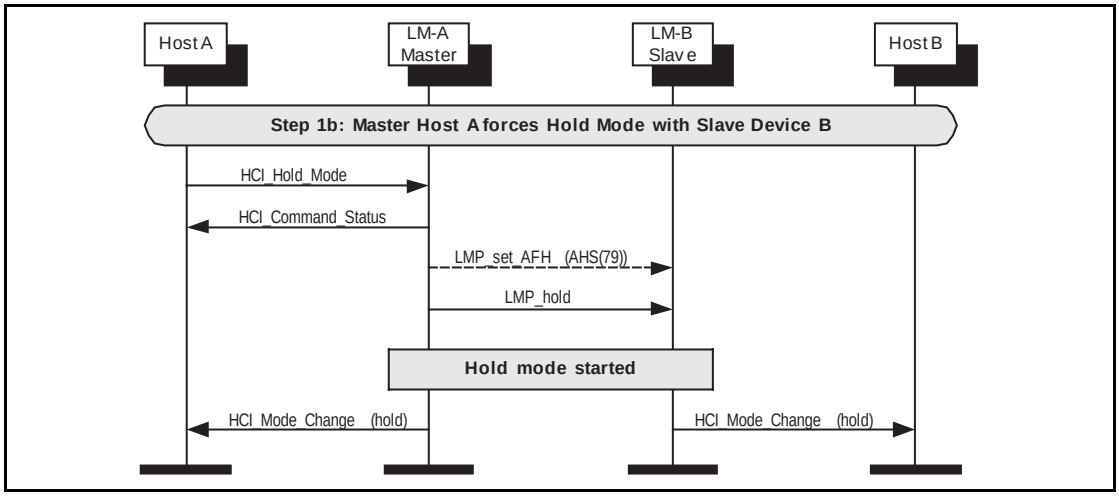

Figure 6.4: Master forces hold mode.

Step 1c: A slave device requests hold mode. (See Figure 6.5 on page 633)

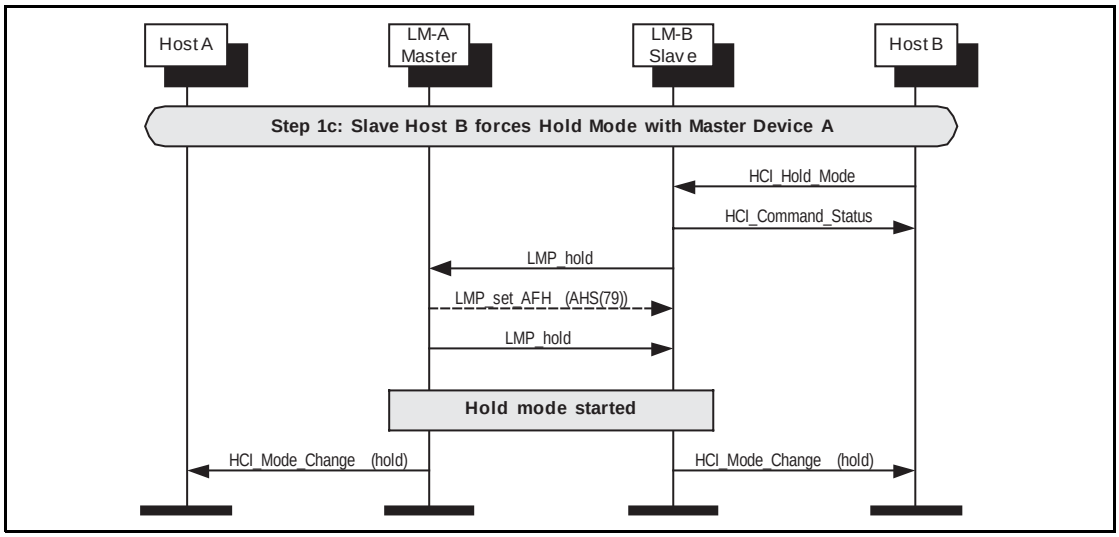

Figure 6.5: Slave forces hold mode.

Step 2: When hold mode completes the hosts are notified using the HCI_Mode_Change event. (See Figure 6.6 on page 633)

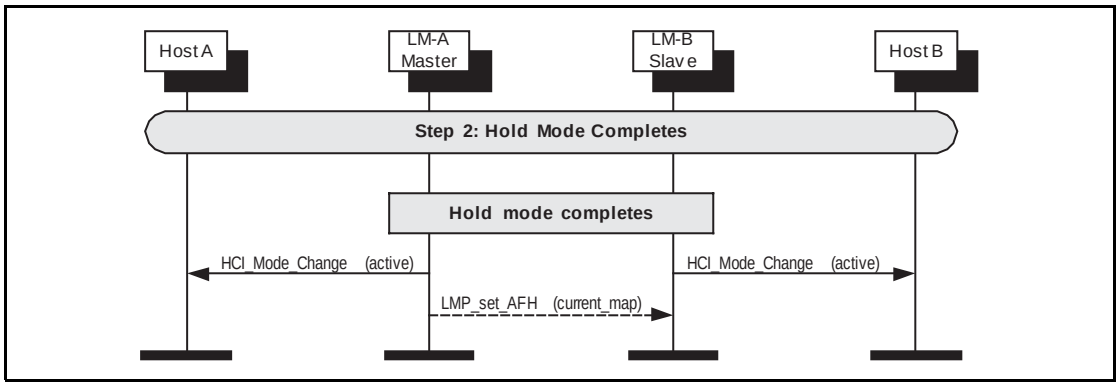

Figure 6.6: Hold mode completes.

6.3 PARK STATE

Park state can be entered by using the HCI_Park_State command.

Step 1a: The master requests to place the slave in the park state. Before sending the LMP_park_req PDU, the master may disable AFH by setting the connection into AHS(79). (See Figure 6.7 on page 634)

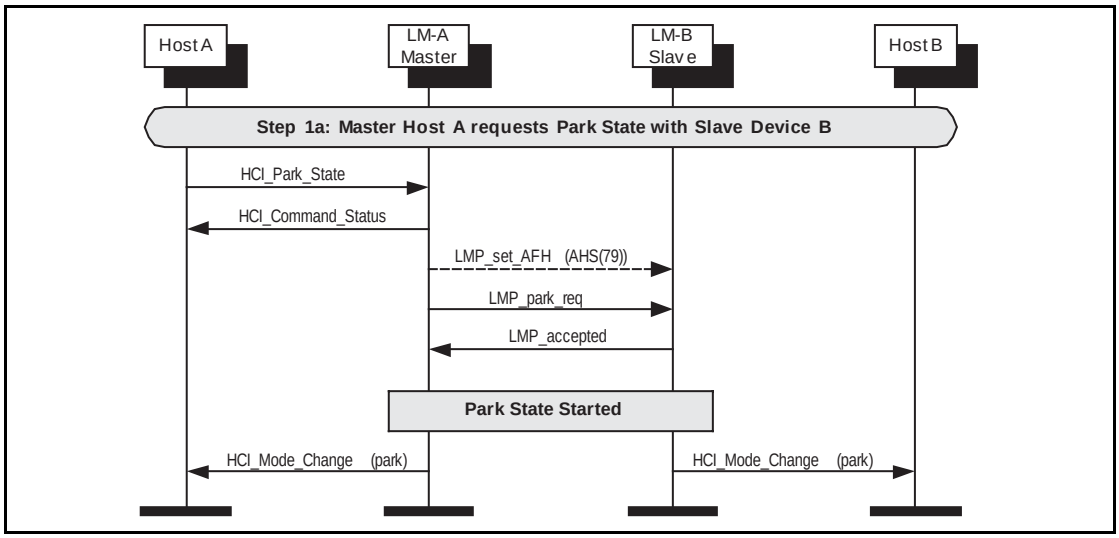

Figure 6.7: Park state request from master.

Step 1b: The slave requests to be placed in the park state. Before sending the LMP_park_req PDU back to the slave, the master may disable AFH by setting the connection into AHS(79). (See Figure 6.8 on page 634)

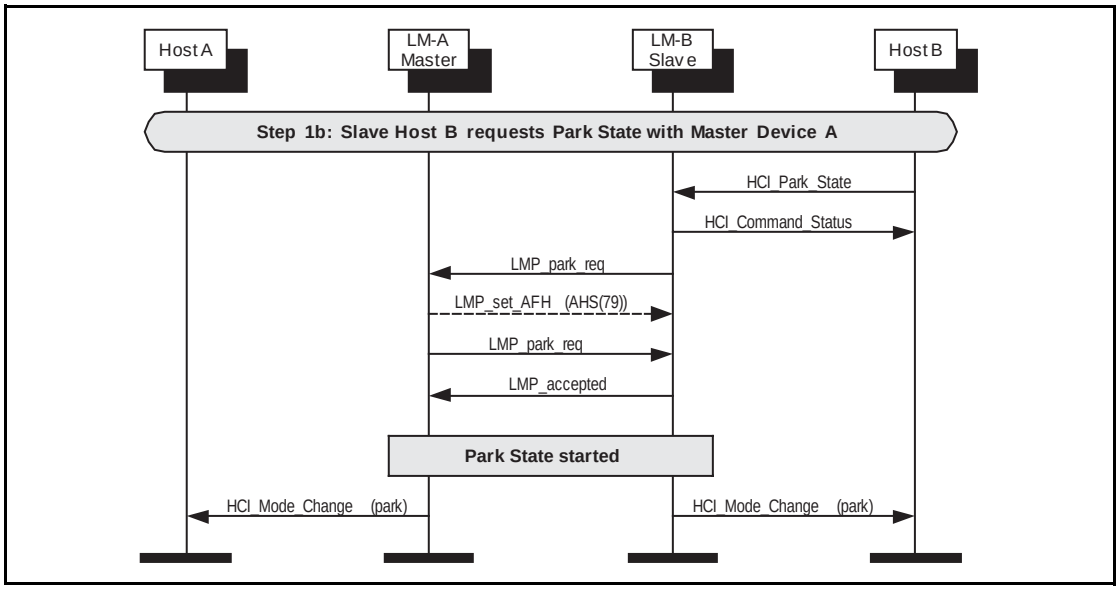

Figure 6.8: Park state request from slave.

Step 2: When in the park state, a slave still needs to unparked for link supervision purposes. The master sends an LMP_unpark_PM_ADDR_req PDU or an LMP_unpark_BD_ADDR_req PDU to the slave during the beacon. Only the PM_ADDR version is illustrated in the figure. (See Figure 6.9 on page 635)

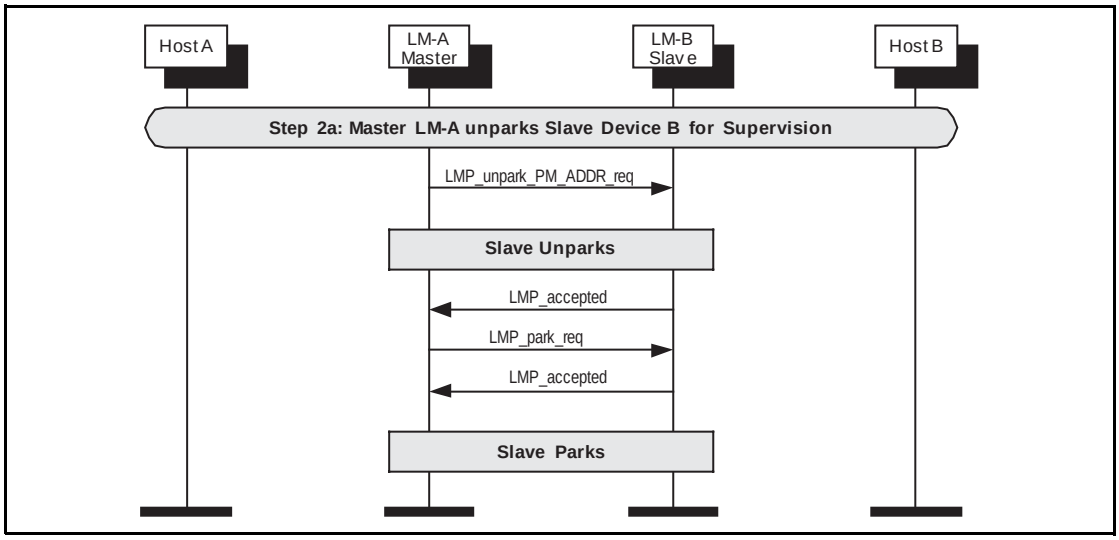

Figure 6.9: Master unparks slave for supervision.

Step 3a: A master may unpark a slave to exit park state. The master should re-enable AFH by setting the current AFH channel map to the unparked slave. (See Figure 6.10 on page 635)

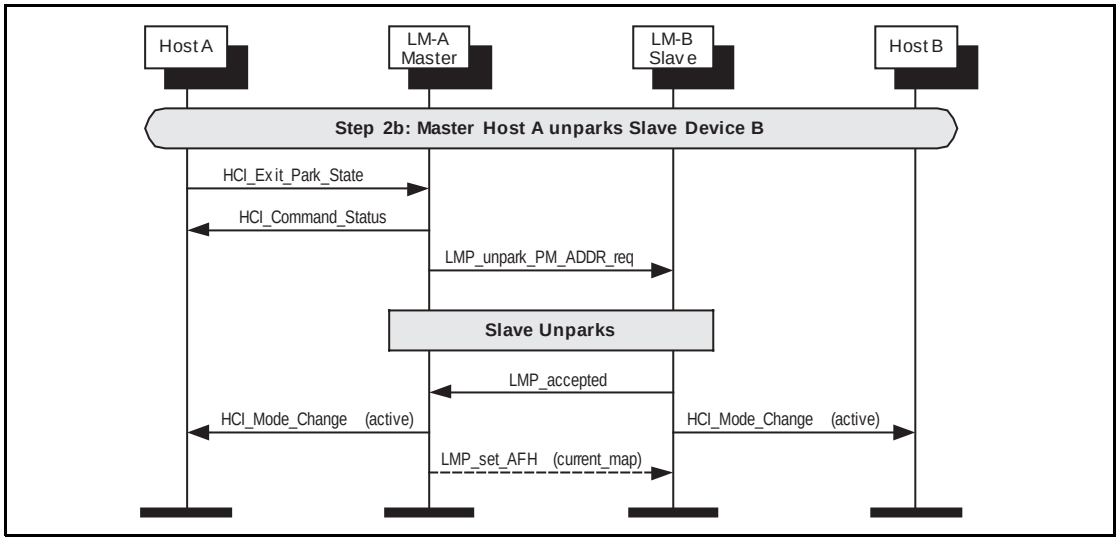

Figure 6.10: Master exits park state with slave.

Step 3b: A slave may unpark itself by sending a message in an access window. It will then receive instructions from the master to unpark. The master should re-enable AFH by setting the current AFH channel map to the unparked slave. (See Figure 6.11 on page 636)

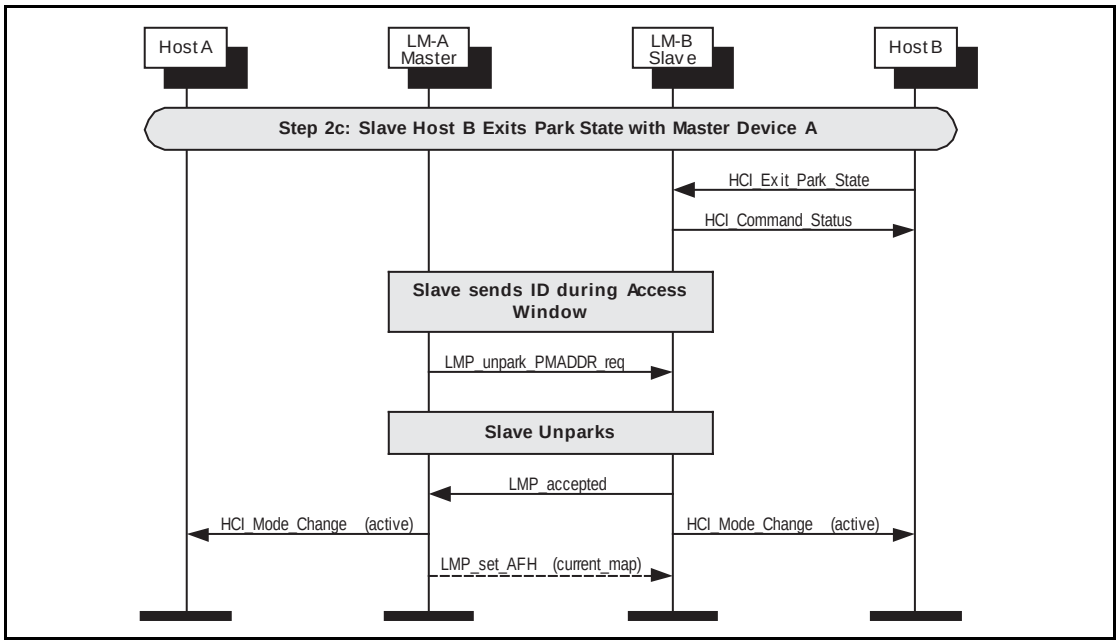

Figure 6.11: Slave exits park state with master.

7 BUFFER MANAGEMENT, FLOW CONTROL

Buffer management is very important for resource limited devices. This can be achieved on the Host Controller Interface using the HCI_Read_Buffer_Size command, and the HCI_Number_Of_Completed_Packets event, and the HCI_Set_Host_Controller_To_Host_Flow_Control, HCI_Host_Buffer_Size and HCI_Host_Number_Of_Completed_Packets commands.

Step 1: During initialization, the host reads the buffer sizes available in the Controller. When an HCI Data Packet has been transferred to the remote device, and a Baseband acknowledgement has been received for this data, then an HCI_Number_Of_Completed_Packets event will be generated. (See Figure 7.1 on page 637)

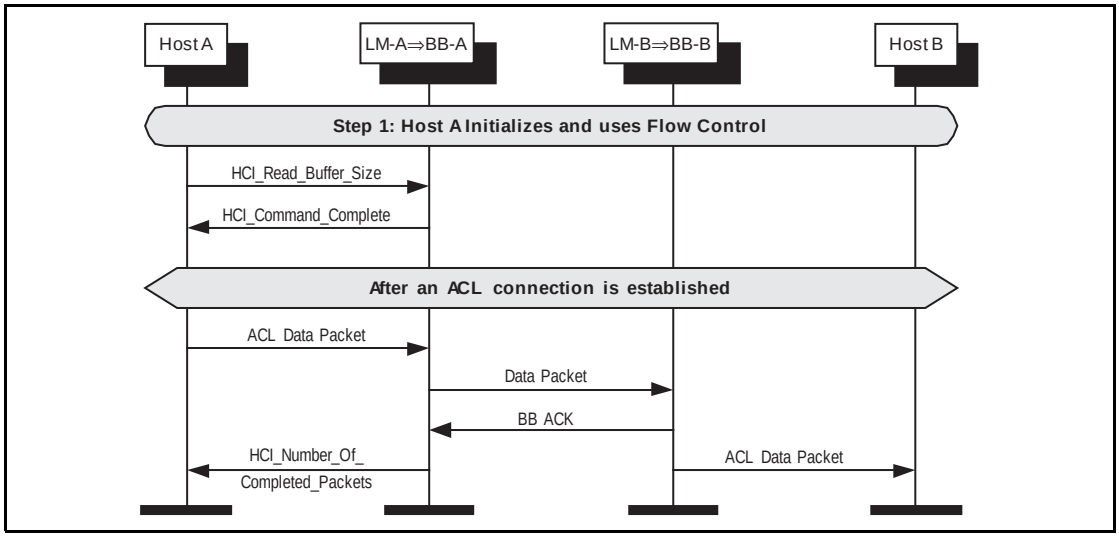

Figure 7.1: Host to Controller flow control.

Step 2: During initialization, the host notifies the Controller that host flow control shall be used, and then the host buffer sizes available. When a data packet has been received from a remote device, an HCI Data Packet is sent to the host from the Controller, and the host shall acknowledge its receipt by sending HCI_Host_Number_Of_Completed_Packets. (See Figure 7.2 on page 638)

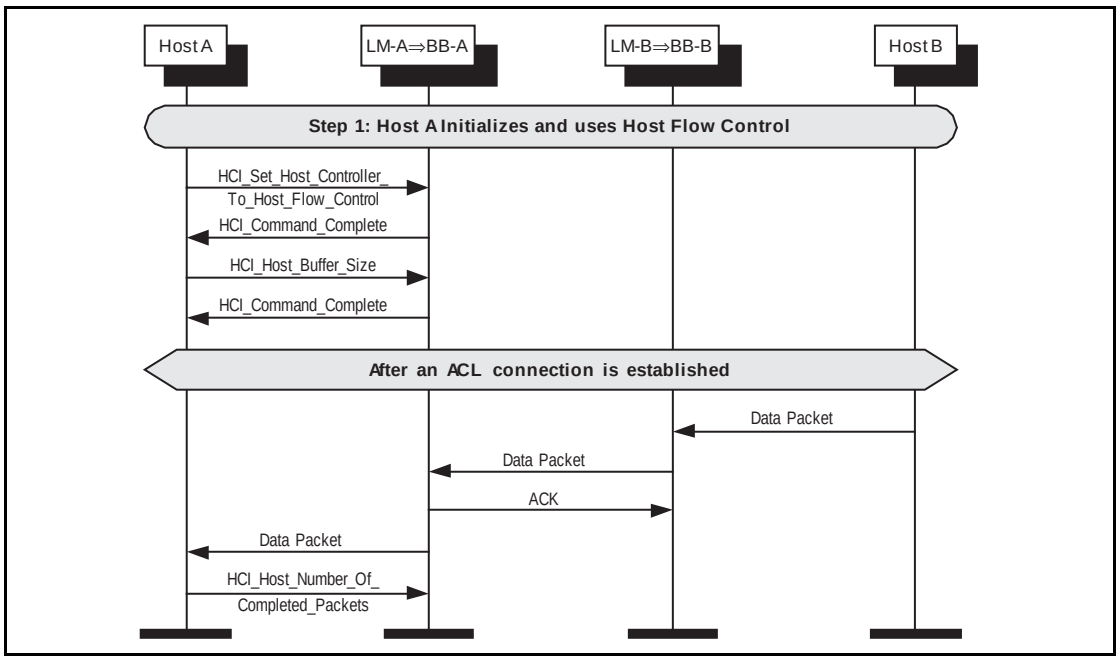

Figure 7.2: Controller to Host flow control.

8 LOOPBACK MODE

The loopback modes are used for testing of a device only.

8.1 LOCAL LOOPBACK MODE

The local loopback mode is used to loopback received HCI Commands, and HCI ACL and HCI Synchronous packets sent from the Host to the Controller.

Step 1: The host enters local loopback mode. Four connection complete events are generated and then a command complete event.
(See Figure 8.1 on page 639)

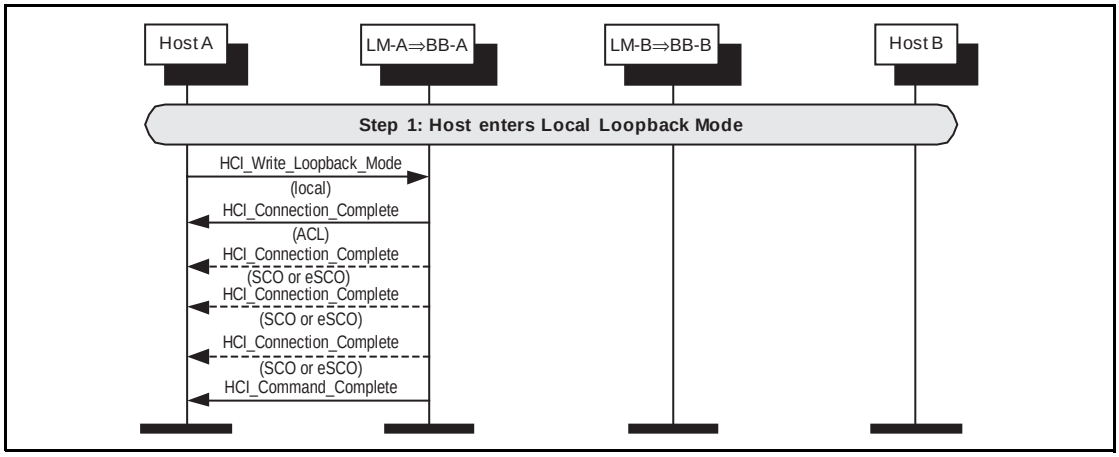

Figure 8.1: Entering local loopback mode.

Step 2a: The host sending HCI Data Packet will receive the exact same data back in HCI Data Packets from the Controller. (See Figure 8.2 on page 639)

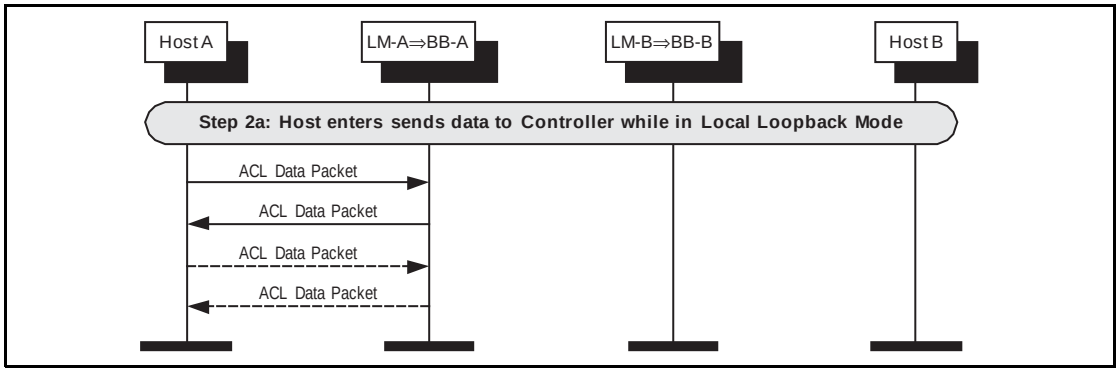

Figure 8.2: Looping back data in local loopback mode.

Step 2b: The host sending most HCI Command Packets to the Controller will receive an HCI_Loopback_Command event with the contents of the HCI Command Packet in the payload. (See Figure 8.3 on page 640)

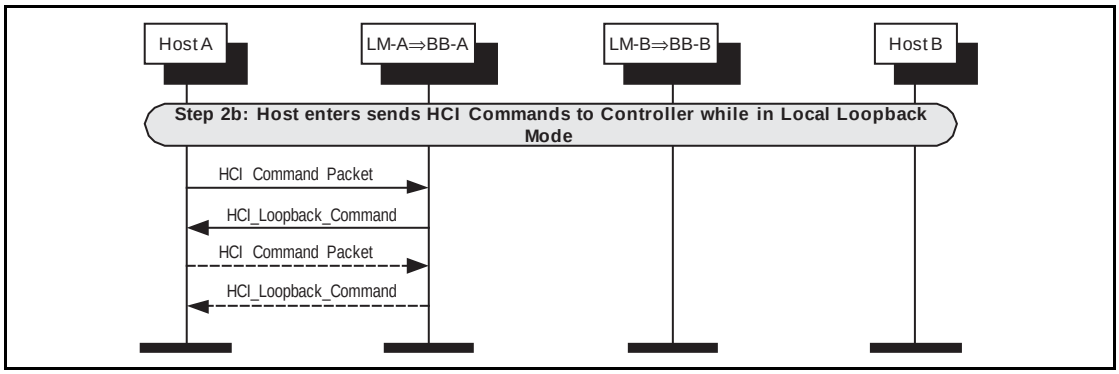

Figure 8.3: Looping back commands in local loopback mode.

Step 3: The host exits local loopback mode. Multiple disconnection complete events are generated before the command complete event.
(See Figure 8.4 on page 640)

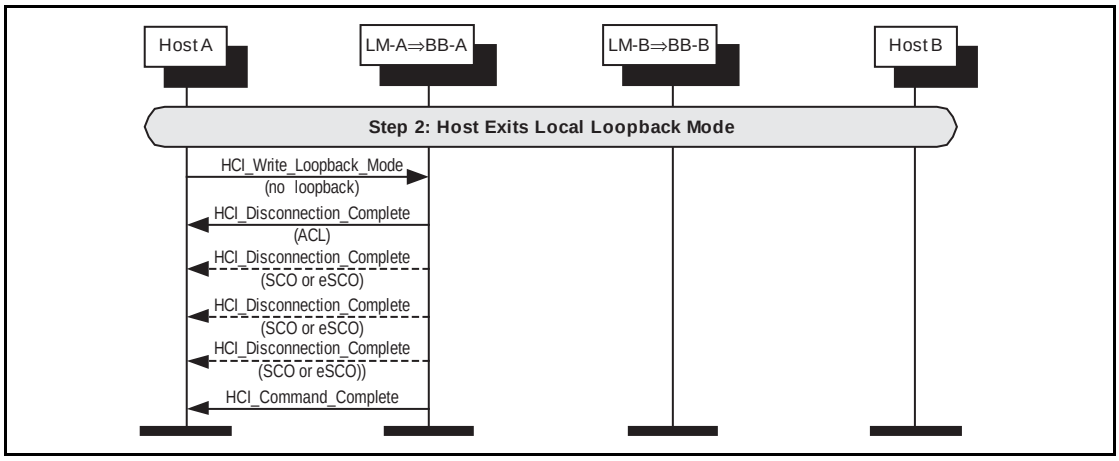

Figure 8.4: Exiting local loopback mode.

8.2 REMOTE LOOPBACK MODE

The remote loopback mode is used to lookback data to a remote device over the air.

Step 1: The remote host first sets up an connection to the local device. The local device then enables remote loopback. (See Figure 8.5 on page 641)

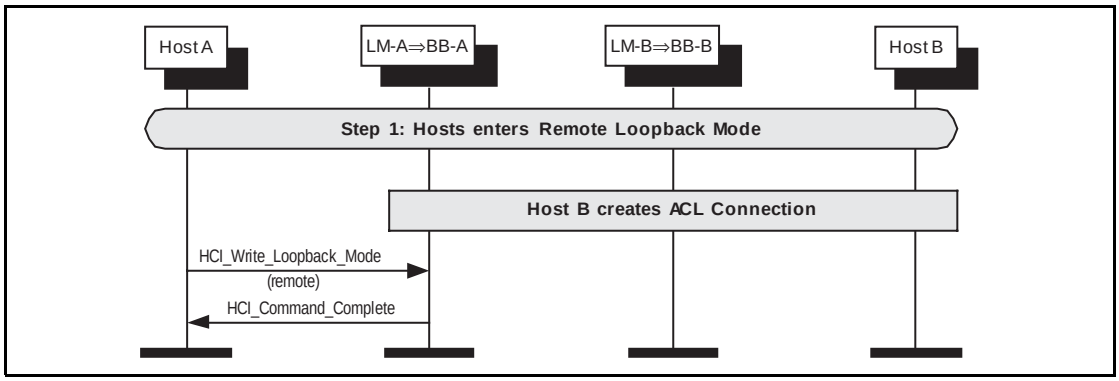

Figure 8.5: Entering remote loopback mode.

Step 2: Any data received from the remote host will be loopbacked in the Controller of the local device. (See Figure 8.6 on page 641)

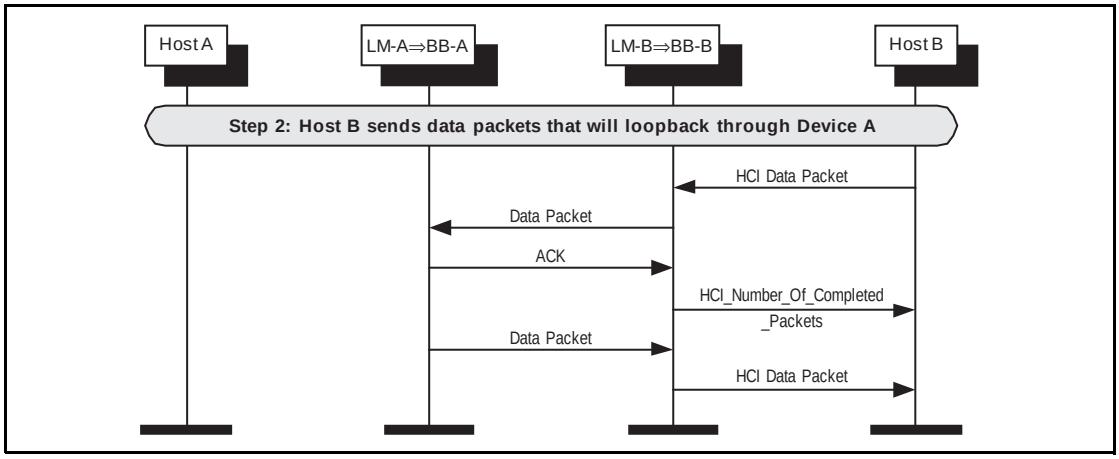

Figure 8.6: Looping back data in Remote Loopback Mode.

Step 3: The local host exits remote loopback mode. Any connections can then be disconnected by the remote device. (See Figure 8.7 on page 642)

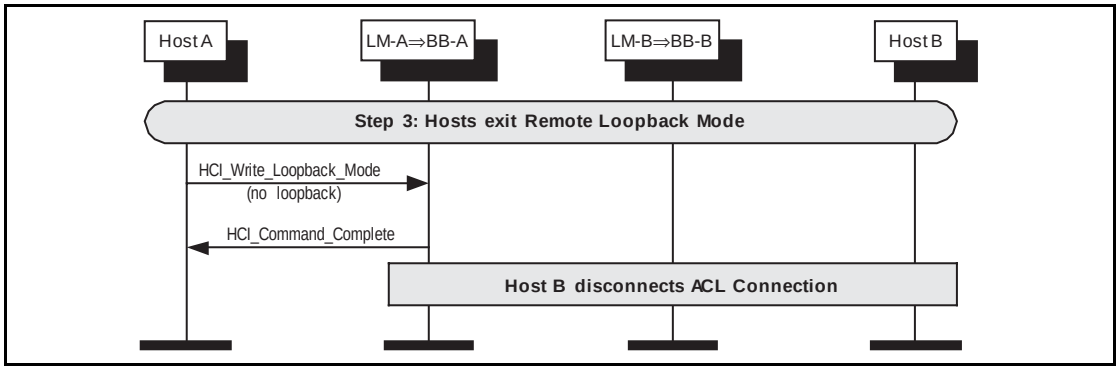

Figure 8.7: Exiting remote loopback mode.

9 LIST OF FIGURES

Figure 1.1: Example MSC. 600

Figure 2.1: Remote name request. 601
Figure 2.2: Remote name request if no current baseband connection. 601
Figure 2.3: Remote name request with baseband connection. 602
Figure 2.4: Host A starts inquiry procedure. 602
Figure 2.5: LM-A performs inquiry and reports result.. 603
Figure 2.6: Host A cancels inquiry. 603
Figure 2.7: LM-A terminates current inquiry. 604
Figure 2.8: Host A starts periodic inquiry. 604
Figure 2.9: LM-A periodically performs an inquiry and reports result. 605
Figure 2.10: LM-A terminates current inquiry. 605
Figure 2.11: Host A decides to exit periodic inquiry. 605

Figure 3.1: Overview diagram for connection setup. 607
Figure 3.2: Host A requests connection with device B. 608
Figure 3.3: LM-A and LM-B exchange features. 608
Figure 3.4: LM-A requests host connection. 608
Figure 3.5: Device B rejects connection request. 609
Figure 3.6: Device B accepts connection request. 609
Figure 3.7: Device B accepts connection requests as master. 610
Figure 3.8: LM-A starts adaptive frequency hopping. 610
Figure 3.9: Authentication initiated. 611
Figure 3.10: Pairing during connection setup. 612
Figure 3.11: Authentication during connection setup. 613
Figure 3.12: Starting encryption during connection setup. 613
Figure 3.13: LM-A and LM-B finishes connection setup. 614
Figure 3.14: Host A decides to disconnect. 614

Figure 4.1: Authentication requested. 615
Figure 4.2: Encryption requested. 616
Figure 4.3: Encryption off requested. 616
Figure 4.4: Change connection link key. 617
Figure 4.5: Change to master link key. 618
Figure 4.6: Change to semi permanent link key. 619
Figure 4.7: Read remote supported features. 620
Figure 4.8: Read remote extended features. 620
Figure 4.9: Read clock offset. 621
Figure 4.10: Read remote version information. 621
Figure 4.11: QoS flow specification. 622

Figure 4.12: Master requests role switch. 622
Figure 4.13: Slave requests role switch. 623
Figure 4.14: Role switch is performed. 623

Figure 5.1: Master requests synchronous EV3, EV4 OR EV5 connection. 625
Figure 5.2: Slave requests synchronous EV3, EV4 OR EV5 connection. .626
Figure 5.3: Master requests synchronous connection using SCO. 626
Figure 5.4: Master requests synchronous connection with legacy slave. .627
Figure 5.5: Any device that supports only SCO connections requests a synchronous connection with a device. 627
Figure 5.6: Master renegotiates eSCO connection. 628
Figure 5.7: Slave renegotiates eSCO connection. 628
Figure 5.8: Synchronous disconnection of eSCO connection. 629
Figure 5.9: Synchronous disconnection of SCO connection. 629

Figure 6.1: Sniff mode request. 631
Figure 6.2: Exit sniff mode request. 631
Figure 6.3: Hold request. 632
Figure 6.4: Master forces hold mode. 632
Figure 6.5: Slave forces hold mode. 633
Figure 6.6: Hold mode completes. 633
Figure 6.7: Park state request from master. 634
Figure 6.8: Park state request from slave. 634
Figure 6.9: Master unparks slave for supervision. 635
Figure 6.10: Master exits park state with slave. 635
Figure 6.11: Slave exits park state with master. 636

Figure 7.1: Host to Controller flow control. 637
Figure 7.2: Controller to Host flow control. 638

Figure 8.1: Entering local loopback mode. 639
Figure 8.2: Looping back data in local loopback mode. 639
Figure 8.3: Looping back commands in local loopback mode. 640
Figure 8.4: Exiting local loopback mode. 640
Figure 8.5: Entering remote loopback mode. 641
Figure 8.6: Looping back data in Remote Loopback Mode. 641
Figure 8.7: Exiting remote loopback mode. 642

SAMPLE DATA

This appendix contains sample data for various parts of the Bluetooth baseband specification. All sample data are provided for reference purpose only; they are intended as a complement to the definitions provided elsewhere in the specification. They can be used to check the behavior of an implementation and avoid misunderstandings. Fulfilling these sample data is a necessary but not sufficient condition for an implementation to be fully Bluetooth compliant.

CONTENTS

1 Encryption Sample Data 649
1.1 Generating Kc' from Kc, ... 649
1.2 First Set of Sample Data 652
1.3 Second Set of Sample Data 660
1.4 Third Set of Samples 668
1.5 Fourth Set of Samples 676
2 Frequency Hopping Sample Data 685
2.1 First set 686
2.2 Second set 692
2.3 Third set 698
3 Access Code Sample Data 705
4 HEC and Packet Header Sample Data 709
5 CRC Sample Data 711
6 Complete Sample Packets 713
6.1 Example of DH1 Packet 713
6.2 Example of DM1 Packet 714
7 Whitening Sequence Sample Data 715
8 FEC Sample Data 719
9 Encryption Key Sample Data 721
9.1 Four Tests of E1 721
9.2 Four Tests of E21 726
9.3 Three Tests of E22 728
9.4 Tests of E22 With Pin Augmenting 730
9.5 Four Tests of E3 740

1 ENCRYPTION SAMPLE DATA

This section contains four sets of sample data for the encryption process.

With respect to the functional description of the encryption engine in the Bluetooth baseband specification, the contents of registers and resulting concurrent values are listed as well. This by no means excludes different implementations (as far as they produce the same encryption stream) but is intended to describe the functional behavior.

In case of misunderstandings or inconsistencies, these sample data form the normative reference.

1.1 GENERATING KC' FROM KC,

where Kc'(x) = g2(x)(Kc(x) mod g1(x)).

```
Note: All polynomials are in hexadecimal notation.
      'L' is the effective key length in bytes.
      The notation 'p: [m]' implies that deg(p(x)) = m.

                              MSB                                     LSB
L = 1
g1:                [8]        00000000 00000000 00000000 0000011d
g2:                [119]      00e275a0 abd218d4 cf928b9b bf6cb08f
Kc:                           a2b230a4 93f281bb 61a85b82 a9d4a30e
Kc mod g1:         [7]        00000000 00000000 00000000 0000009f
g2(Kc mod g1):     [126]      7aa16f39 59836ba3 22049a7b 87f1d8a5
------------------------------------------------------------
L = 2
g1:                [16]       00000000 00000000 00000000 0001003f
g2:                [112]      0001e3f6 3d7659b3 7f18c258 cff6efef
Kc:                           64e7df78 bb7ccaa4 61433123 5b3222ad
Kc mod g1:         [12]       00000000 00000000 00000000 00001ff0
g2(Kc mod g1):     [124]      142057bb 0bceac4c 58bd142e 1e710a50
------------------------------------------------------------
L = 3
g1:                [24]       00000000 00000000 00000000 010000db
g2:                [104]      000001be f66c6c3a b1030a5a 1919808b
Kc:                           575e5156 ba685dc6 112124ac edb2c179
Kc mod g1:         [23]       00000000 00000000 00000000 008ddbc8
g2(Kc mod g1):     [127]      d56d0adb 8216cb39 7fe3c591 1ff95618
------------------------------------------------------------
L = 4
g1:                [32]       00000000 00000000 00000001 000000af
g2:                [96]       00000001 6ab89969 de17467f d3736ad9
Kc:                           8917b4fc 403b6db2 1596b86d 1cb8adab
Kc mod g1:         [31]       00000000 00000000 00000000 aa1e78aa
g2(Kc mod g1):     [127]      91910128 b0e2f5ed a132a03e af3d8cda
------------------------------------------------------------
```

Sample Data

```
L = 5
g1:                 [40]        00000000 00000000 00000100 00000039
g2:                 [88]        00000000 01630632 91da50ec 55715247
Kc:                             785c915b dd25b9c6 0102ab00 b6cd2a68
Kc mod g1:          [38]        00000000 00000000 0000007f 13d44436
g2(Kc mod g1):      [126]       6fb5651c cb80c8d7 ea1ee56d f1ec5d02
-------------------------------------------------------------
L = 6
g1:                 [48]        00000000 00000000 00010000 00000291
g2:                 [77]        00000000 00002c93 52aa6cc0 54468311
Kc:                             5e77d19f 55ccd7d5 798f9a32 3b83e5d8
Kc mod g1:          [47]        00000000 00000000 000082eb 4af213ed
g2(Kc mod g1):      [124]       16096bcb afcf8def 1d226a1b 4d3f9a3d
-------------------------------------------------------------
```

Sample Data

```
L = 7
g1:                 [56]        00000000 00000000 01000000 00000095
g2:                 [71]        00000000 000000b3 f7fffce2 79f3a073
Kc:                             05454e03 8ddcfbe3 ed024b2d 92b7f54c
Kc mod g1:          [55]        00000000 00000000 0095b8a4 8eb816da
g2(Kc mod g1):      [126]       50f9c0d4 e3178da9 4a09fe0d 34f67b0e
------------------------------------------------------------
L = 8
g1:                 [64]        00000000 00000001 00000000 0000001b
g2:                 [63]        00000000 00000000 a1ab815b c7ec8025
Kc:                             7ce149fc f4b38ad7 2a5d8a41 eb15ba31
Kc mod g1:          [63]        00000000 00000000 8660806c 1865deec
g2(Kc mod g1):      [126]       532c36d4 5d0954e0 922989b6 826f78dc
------------------------------------------------------------
L = 9
g1:                 [72]        00000000 00000100 00000000 00000609
g2:                 [49]        00000000 00000000 0002c980 11d8b04d
Kc:                             5eeff7ca 84fc2782 9c051726 3df6f36e
Kc mod g1:          [71]        00000000 00000083 58ccb7d0 b95d3c71
g2(Kc mod g1):      [120]       016313f6 0d3771cf 7f8e4bb9 4aa6827d
------------------------------------------------------------
L = 10
g1:                 [80]        00000000 00010000 00000000 00000215
g2:                 [42]        00000000 00000000 0000058e 24f9a4bb
Kc:                             7b13846e 88beb4de 34e7160a fd44dc65
Kc mod g1:          [79]        00000000 0000b4de 34171767 f36981c3
g2(Kc mod g1):      [121]       023bc1ec 34a0029e f798dcfb 618ba58d
------------------------------------------------------------
L = 11
g1:                 [88]        00000000 01000000 00000000 0000013b
g2:                 [35]        00000000 00000000 0000000c a76024d7
Kc:                             bda6de6c 6e7d757e 8dfe2d49 9a181193
Kc mod g1:          [86]        00000000 007d757e 8dfe88aa 2fcee371
g2(Kc mod g1):      [121]       022e08a9 3aa51d8d 2f93fa78 85cc1f87
------------------------------------------------------------
L = 12
g1:                 [96]        00000001 00000000 00000000 000000dd
g2:                 [28]        00000000 00000000 00000000 1c9c26b9
Kc:                             e6483b1c 2cdb1040 9a658f97 c4efd90d
Kc mod g1:          [93]        00000000 2cdb1040 9a658fd7 5b562e41
g2(Kc mod g1):      [121]       030d752b 216fe29b b880275c d7e6f6f9
------------------------------------------------------------
L = 13
g1:                 [104]       00000100 00000000 00000000 0000049d
g2:                 [21]        00000000 00000000 00000000 0026d9e3
Kc:                             d79d281d a2266847 6b223c46 dc0ab9ee
Kc mod g1:          [100]       0000001d a2266847 6b223c45 e1fc5fa6
g2(Kc mod g1):      [121]       03f11138 9cebf919 00b93808 4ac158aa
------------------------------------------------------------
```

```
L = 14
g1:                 [112]       00010000 00000000 00000000 0000014f
g2:                 [14]        00000000 00000000 00000000 00004377
Kc:                             cad9a65b 9fca1c1d a2320fcf 7c4ae48e
Kc mod g1:          [111]       0000a65b 9fca1c1d a2320fcf 7cb6a909
g2(Kc mod g1):      [125]       284840fd f1305f3c 529f5703 76adf7cf
------------------------------------------------------------
L = 15
g1:                 [120]       01000000 00000000 00000000 000000e7
g2:                 [7]         00000000 00000000 00000000 00000089
Kc:                             21f0cc31 049b7163 d375e9e1 06029809
Kc mod g1:          [119]       00f0cc31 049b7163 d375e9e1 0602840e
g2(Kc mod g1):      [126]       7f10b53b 6df84b94 f22e566a 3754a37e
------------------------------------------------------------
L = 16
g1:                 [128]       00000001 00000000 00000000 00000000 00000000
g2:                 [0]         00000000 00000000 00000000 00000001
Kc:                             35ec8fc3 d50ccd32 5f2fd907 bde206de
Kc mod g1:          [125]       35ec8fc3 d50ccd32 5f2fd907 bde206de
g2(Kc mod g1):      [125]       35ec8fc3 d50ccd32 5f2fd907 bde206de
------------------------------------------------------------
```

1.2 FIRST SET OF SAMPLE DATA

```
Initial values for the key, pan address and clock

K'c1[0]   = 00   K'c1[1]   = 00    K'c1[2]   = 00    K'c1[3]  = 00
K'c1[4]   = 00   K'c1[5]   = 00    K'c1[6]   = 00    K'c1[7]  = 00
K'c1[8]   = 00   K'c1[9]   = 00    K'c1[10]  = 00    K'c1[11] = 00
K'c1[12]  = 00   K'c1[13]  = 00    K'c1[14]  = 00    K'c1[15] = 00

Addr1[0] = 00   Addr1[1] = 00    Addr1[2] = 00
Addr1[3] = 00   Addr1[4] = 00    Addr1[5] = 00

CL1[0]  = 00   CL1[1]  = 00    CL1[2]  = 00    CL1[3]  = 00


==============================================================================================
         Fill LFSRs with initial data
==============================================================================================

  t  clk#    LFSR1    LFSR2     LFSR3      LFSR4           X1 X2 X3 X4   Z  C[t+1] C[t] C[t-1]

  0     0    0000000* 00000000* 000000000* 0000000000*     0  0  0  0    0  00     00   00
  1     1    0000000* 00000001* 000000000* 0000000001*     0  0  0  0    0  00     00   00
  2     2    0000000* 00000002* 000000000* 0000000003*     0  0  0  0    0  00     00   00
  3     3    0000000* 00000004* 000000000* 0000000007*     0  0  0  0    0  00     00   00
  4     4    0000000* 00000008* 000000000* 000000000E*     0  0  0  0    0  00     00   00
  5     5    0000000* 00000010* 000000000* 000000001C*     0  0  0  0    0  00     00   00
  6     6    0000000* 00000020* 000000000* 0000000038*     0  0  0  0    0  00     00   00
```

7	7	0000000*	00000040*	000000000*	0000000070*	0	0	0	0	0	00	00	00
8	8	0000000*	00000080*	000000000*	00000000E0*	0	0	0	0	0	00	00	00
9	9	0000000*	00000100*	000000000*	00000001C0*	0	0	0	0	0	00	00	00
10	10	0000000*	00000200*	000000000*	0000000380*	0	0	0	0	0	00	00	00
11	11	0000000*	00000400*	000000000*	0000000700*	0	0	0	0	0	00	00	00
12	12	0000000*	00000800*	000000000*	0000000E00*	0	0	0	0	0	00	00	00
13	13	0000000*	00001000*	000000000*	0000001C00*	0	0	0	0	0	00	00	00
14	14	0000000*	00002000*	000000000*	0000003800*	0	0	0	0	0	00	00	00
15	15	0000000*	00004000*	000000000*	0000007000*	0	0	0	0	0	00	00	00
16	16	0000000*	00008000*	000000000*	000000E000*	0	0	0	0	0	00	00	00
17	17	0000000*	00010000*	000000000*	000001C000*	0	0	0	0	0	00	00	00
18	18	0000000*	00020000*	000000000*	0000038000*	0	0	0	0	0	00	00	00
19	19	0000000*	00040000*	000000000*	0000070000*	0	0	0	0	0	00	00	00
20	20	0000000*	00080000*	000000000*	00000E0000*	0	0	0	0	0	00	00	00
21	21	0000000*	00100000*	000000000*	00001C0000*	0	0	0	0	0	00	00	00
22	22	0000000*	00200000*	000000000*	0000380000*	0	0	0	0	0	00	00	00
23	23	0000000*	00400000*	000000000*	0000700000*	0	0	0	0	0	00	00	00
24	24	0000000*	00800000*	000000000*	0000E00000*	0	1	0	0	1	00	00	00
25	25	0000000*	01000000*	000000000*	0001C00000*	0	0	0	0	0	00	00	00
26	26	0000000	02000000*	000000000*	0003800000*	0	0	0	0	0	00	00	00
27	27	0000000	04000000*	000000000*	0007000000*	0	0	0	0	0	00	00	00
28	28	0000000	08000000*	000000000*	000E000000*	0	0	0	0	0	00	00	00
29	29	0000000	10000000*	000000000*	001C000000*	0	0	0	0	0	00	00	00
30	30	0000000	20000000*	000000000*	0038000000*	0	0	0	0	0	00	00	00
31	31	0000000	40000000*	000000000*	0070000000*	0	0	0	0	0	00	00	00
32	32	0000000	00000001	000000000*	00E0000000*	0	0	0	1	1	00	00	00
33	33	0000000	00000002	000000000*	01C0000000*	0	0	0	1	1	00	00	00
34	34	0000000	00000004	000000000	0380000000*	0	0	0	1	1	00	00	00
35	35	0000000	00000008	000000000	0700000000*	0	0	0	0	0	00	00	00
36	36	0000000	00000010	000000000	0E00000000*	0	0	0	0	0	00	00	00
37	37	0000000	00000020	000000000	1C00000000*	0	0	0	0	0	00	00	00
38	38	0000000	00000040	000000000	3800000000*	0	0	0	0	0	00	00	00
39	39	0000000	00000080	000000000	7000000000*	0	0	0	0	0	00	00	00

==========

Start clocking Summation Combiner

==========

40	1	0000000	00000100	000000000	6000000001	0	0	0	0	0	00	00	00
41	2	0000000	00000200	000000000	4000000003	0	0	0	0	0	00	00	00
42	3	0000000	00000400	000000000	0000000007	0	0	0	0	0	00	00	00
43	4	0000000	00000800	000000000	000000000E	0	0	0	0	0	00	00	00
44	5	0000000	00001001	000000000	000000001D	0	0	0	0	0	00	00	00
45	6	0000000	00002002	000000000	000000003B	0	0	0	0	0	00	00	00
46	7	0000000	00004004	000000000	0000000077	0	0	0	0	0	00	00	00
47	8	0000000	00008008	000000000	00000000EE	0	0	0	0	0	00	00	00
48	9	0000000	00010011	000000000	00000001DD	0	0	0	0	0	00	00	00
49	10	0000000	00020022	000000000	00000003BB	0	0	0	0	0	00	00	00
50	11	0000000	00040044	000000000	0000000777	0	0	0	0	0	00	00	00
51	12	0000000	00080088	000000000	0000000EEE	0	0	0	0	0	00	00	00
52	13	0000000	00100110	000000000	0000001DDD	0	0	0	0	0	00	00	00
53	14	0000000	00200220	000000000	0000003BBB	0	0	0	0	0	00	00	00
54	15	0000000	00400440	000000000	0000007777	0	0	0	0	0	00	00	00
55	16	0000000	00800880	000000000	000000EEEE	0	1	0	0	1	00	00	00
56	17	0000000	01001100	000000000	000001DDDD	0	0	0	0	0	00	00	00
57	18	0000000	02002200	000000000	000003BBBB	0	0	0	0	0	00	00	00
58	19	0000000	04004400	000000000	0000077777	0	0	0	0	0	00	00	00
59	20	0000000	08008800	000000000	00000EEEEE	0	0	0	0	0	00	00	00
60	21	0000000	10011000	000000000	00001DDDDD	0	0	0	0	0	00	00	00

Sample Data

61	22	0000000	20022000	000000000	00003BBBBB	0	0	0	0	0	00	00	00
62	23	0000000	40044000	000000000	0000777777	0	0	0	0	0	00	00	00
63	24	0000000	00088001	000000000	0000EEEEEE	0	0	0	0	0	00	00	00
64	25	0000000	00110003	000000000	0001DDDDDD	0	0	0	0	0	00	00	00
65	26	0000000	00220006	000000000	0003BBBBBB	0	0	0	0	0	00	00	00
66	27	0000000	0044000C	000000000	0007777777	0	0	0	0	0	00	00	00
67	28	0000000	00880018	000000000	000EEEEEEE	0	1	0	0	1	00	00	00
68	29	0000000	01100031	000000000	001DDDDDDC	0	0	0	0	0	00	00	00
69	30	0000000	02200062	000000000	003BBBBBB8	0	0	0	0	0	00	00	00
70	31	0000000	044000C4	000000000	0077777770	0	0	0	0	0	00	00	00
71	32	0000000	08800188	000000000	00EEEEEEE0	0	1	0	1	0	01	00	00
72	33	0000000	11000311	000000000	01DDDDDDC1	0	0	0	1	0	00	01	00
73	34	0000000	22000622	000000000	03BBBBBB83	0	0	0	1	1	11	00	01
74	35	0000000	44000C44	000000000	0777777707	0	0	0	0	1	10	11	00
75	36	0000000	08001888	000000000	0EEEEEEE0E	0	0	0	1	1	01	10	11
76	37	0000000	10003111	000000000	1DDDDDDC1D	0	0	0	1	0	01	01	10
77	38	0000000	20006222	000000000	3BBBBBB83B	0	0	0	1	0	11	01	01
78	39	0000000	4000C444	000000000	7777777077	0	0	0	0	1	01	11	01
79	40	0000000	00018888	000000000	6EEEEEE0EF	0	0	0	1	0	10	01	11
80	41	0000000	00031110	000000000	5DDDDDC1DE	0	0	0	1	1	00	10	01
81	42	0000000	00062220	000000000	3BBBBB83BC	0	0	0	1	1	01	00	10
82	43	0000000	000C4440	000000000	7777770779	0	0	0	0	1	01	01	00
83	44	0000000	00188880	000000000	6EEEEE0EF2	0	0	0	1	0	11	01	01
84	45	0000000	00311100	000000000	5DDDDC1DE5	0	0	0	1	0	10	11	01
85	46	0000000	00622200	000000000	3BBBB83BCB	0	0	0	1	1	01	10	11
86	47	0000000	00C44400	000000000	7777707797	0	1	0	0	0	01	01	10
87	48	0000000	01888801	000000000	6EEEE0EF2F	0	1	0	1	1	11	01	01
88	49	0000000	03111003	000000000	5DDDC1DE5E	0	0	0	1	0	10	11	01
89	50	0000000	06222006	000000000	3BBB83BCBC	0	0	0	1	1	01	10	11
90	51	0000000	0C44400C	000000000	7777077979	0	0	0	0	1	00	01	10
91	52	0000000	18888018	000000000	6EEE0EF2F2	0	1	0	1	0	10	00	01
92	53	0000000	31110030	000000000	5DDC1DE5E5	0	0	0	1	1	11	10	00
93	54	0000000	62220060	000000000	3BB83BCBCB	0	0	0	1	0	00	11	10
94	55	0000000	444400C1	000000000	7770779797	0	0	0	0	0	10	00	11
95	56	0000000	08880183	000000000	6EE0EF2F2F	0	1	0	1	0	00	10	00
96	57	0000000	11100307	000000000	5DC1DE5E5F	0	0	0	1	1	01	00	10
97	58	0000000	2220060E	000000000	3B83BCBCBF	0	0	0	1	0	00	01	00
98	59	0000000	44400C1C	000000000	770779797E	0	0	0	0	0	11	00	01
99	60	0000000	08801838	000000000	6E0EF2F2FC	0	1	0	0	0	01	11	00
100	61	0000000	11003070	000000000	5C1DE5E5F8	0	0	0	0	1	11	01	11
101	62	0000000	220060E0	000000000	383BCBCBF0	0	0	0	0	1	01	11	01
102	63	0000000	4400C1C0	000000000	70779797E0	0	0	0	0	1	11	01	11
103	64	0000000	08018380	000000000	60EF2F2FC1	0	0	0	1	0	10	11	01
104	65	0000000	10030701	000000000	41DE5E5F82	0	0	0	1	1	01	10	11
105	66	0000000	20060E02	000000000	03BCBCBF04	0	0	0	1	0	01	01	10
106	67	0000000	400C1C05	000000000	0779797E09	0	0	0	0	1	10	01	01
107	68	0000000	0018380A	000000000	0EF2F2FC12	0	0	0	1	1	00	10	01
108	69	0000000	00307015	000000000	1DE5E5F825	0	0	0	1	1	01	00	10
109	70	0000000	0060E02A	000000000	3BCBCBF04B	0	0	0	1	0	00	01	00
110	71	0000000	00C1C055	000000000	779797E097	0	1	0	1	0	10	00	01
111	72	0000000	018380AA	000000000	6F2F2FC12F	0	1	0	0	1	11	10	00
112	73	0000000	03070154	000000000	5E5E5F825E	0	0	0	0	1	11	11	10
113	74	0000000	060E02A8	000000000	3CBCBF04BC	0	0	0	1	0	11	11	11
114	75	0000000	0C1C0550	000000000	79797E0979	0	0	0	0	1	00	11	11
115	76	0000000	18380AA0	000000000	72F2FC12F2	0	0	0	1	1	10	00	11
116	77	0000000	30701541	000000000	65E5F825E5	0	0	0	1	1	11	10	00
117	78	0000000	60E02A82	000000000	4BCBF04BCB	0	1	0	1	1	00	11	10

118	79	0000000	41C05505	000000000	1797E09796	0	1	0	1	0	11	00	11
119	80	0000000	0380AA0A	000000000	2F2FC12F2C	0	1	0	0	0	01	11	00
120	81	0000000	07015415	000000000	5E5F825E59	0	0	0	0	1	11	01	11
121	82	0000000	0E02A82A	000000000	3CBF04BCB2	0	0	0	1	0	10	11	01
122	83	0000000	1C055054	000000000	797E097964	0	0	0	0	0	01	10	11
123	84	0000000	380AA0A8	000000000	72FC12F2C9	0	0	0	1	0	01	01	10
124	85	0000000	70154151	000000000	65F825E593	0	0	0	1	0	11	01	01
125	86	0000000	602A82A3	000000000	4BF04BCB26	0	0	0	1	0	10	11	01
126	87	0000000	40550546	000000000	17E097964C	0	0	0	1	1	01	10	11
127	88	0000000	00AA0A8D	000000000	2FC12F2C99	0	1	0	1	1	01	01	10
128	89	0000000	0154151A	000000000	5F825E5932	0	0	0	1	0	11	01	01
129	90	0000000	02A82A34	000000000	3F04BCB264	0	1	0	0	0	10	11	01
130	91	0000000	05505468	000000000	7E097964C9	0	0	0	0	0	01	10	11
131	92	0000000	0AA0A8D0	000000000	7C12F2C992	0	1	0	0	0	01	01	10
132	93	0000000	154151A1	000000000	7825E59324	0	0	0	0	1	10	01	01
133	94	0000000	2A82A342	000000000	704BCB2648	0	1	0	0	1	00	10	01
134	95	0000000	55054684	000000000	6097964C91	0	0	0	1	1	01	00	10
135	96	0000000	2A0A8D09	000000000	412F2C9923	0	0	0	0	1	01	01	00
136	97	0000000	54151A12	000000000	025E593246	0	0	0	0	1	10	01	01
137	98	0000000	282A3424	000000000	04BCB2648D	0	0	0	1	1	00	10	01
138	99	0000000	50546848	000000000	097964C91A	0	0	0	0	0	01	00	10
139	100	0000000	20A8D090	000000000	12F2C99235	0	1	0	1	1	00	01	00
140	101	0000000	4151A120	000000000	25E593246A	0	0	0	1	1	11	00	01
141	102	0000000	02A34240	000000000	4BCB2648D5	0	1	0	1	1	01	11	00
142	103	0000000	05468481	000000000	17964C91AB	0	0	0	1	0	10	01	11
143	104	0000000	0A8D0903	000000000	2F2C992357	0	1	0	0	1	00	10	01
144	105	0000000	151A1206	000000000	5E593246AE	0	0	0	0	0	01	00	10
145	106	0000000	2A34240C	000000000	3CB2648D5C	0	0	0	1	0	00	01	00
146	107	0000000	54684818	000000000	7964C91AB8	0	0	0	0	0	11	00	01
147	108	0000000	28D09030	000000000	72C9923571	0	1	0	1	1	01	11	00
148	109	0000000	51A12060	000000000	6593246AE2	0	1	0	1	1	10	01	11
149	110	0000000	234240C0	000000000	4B2648D5C5	0	0	0	0	0	00	10	01
150	111	0000000	46848180	000000000	164C91AB8A	0	1	0	0	1	01	00	10
151	112	0000000	0D090301	000000000	2C99235714	0	0	0	1	0	00	01	00
152	113	0000000	1A120602	000000000	593246AE28	0	0	0	0	0	11	00	01
153	114	0000000	34240C04	000000000	32648D5C51	0	0	0	0	1	10	11	00
154	115	0000000	68481809	000000000	64C91AB8A2	0	0	0	1	1	01	10	11
155	116	0000000	50903012	000000000	4992357144	0	1	0	1	1	01	01	10
156	117	0000000	21206024	000000000	13246AE288	0	0	0	0	1	10	01	01
157	118	0000000	4240C048	000000000	2648D5C511	0	0	0	0	0	00	10	01
158	119	0000000	04818090	000000000	4C91AB8A23	0	1	0	1	0	00	00	10
159	120	0000000	09030120	000000000	1923571446	0	0	0	0	0	00	00	00
160	121	0000000	12060240	000000000	3246AE288D	0	0	0	0	0	00	00	00
161	122	0000000	240C0480	000000000	648D5C511B	0	0	0	1	1	00	00	00
162	123	0000000	48180900	000000000	491AB8A237	0	0	0	0	0	00	00	00
163	124	0000000	10301200	000000000	123571446F	0	0	0	0	0	00	00	00
164	125	0000000	20602400	000000000	246AE288DF	0	0	0	0	0	00	00	00
165	126	0000000	40C04800	000000000	48D5C511BE	0	1	0	1	0	01	00	00
166	127	0000000	01809001	000000000	11AB8A237D	0	1	0	1	1	00	01	00
167	128	0000000	03012002	000000000	23571446FA	0	0	0	0	0	11	00	01
168	129	0000000	06024004	000000000	46AE288DF5	0	0	0	1	0	01	11	00
169	130	0000000	0C048008	000000000	0D5C511BEA	0	0	0	0	1	11	01	11
170	131	0000000	18090011	000000000	1AB8A237D5	0	0	0	1	0	10	11	01
171	132	0000000	30120022	000000000	3571446FAA	0	0	0	0	0	01	10	11
172	133	0000000	60240044	000000000	6AE288DF55	0	0	0	1	0	01	01	10
173	134	0000000	40480089	000000000	55C511BEAA	0	0	0	1	0	11	01	01
174	135	0000000	00900113	000000000	2B8A237D54	0	1	0	1	1	10	11	01

Sample Data

175	136	0000000	01200227	000000000	571446FAA8	0	0	0	0	0	01	10	11
176	137	0000000	0240044E	000000000	2E288DF550	0	0	0	0	1	00	01	10
177	138	0000000	0480089C	000000000	5C511BEAA0	0	1	0	0	1	11	00	01
178	139	0000000	09001138	000000000	38A237D540	0	0	0	1	0	01	11	00
179	140	0000000	12002270	000000000	71446FAA81	0	0	0	0	1	11	01	11
180	141	0000000	240044E0	000000000	6288DF5503	0	0	0	1	0	10	11	01
181	142	0000000	480089C0	000000000	4511BEAA06	0	0	0	0	0	01	10	11
182	143	0000000	10011381	000000000	0A237D540D	0	0	0	0	1	00	01	10
183	144	0000000	20022702	000000000	1446FAA81A	0	0	0	0	0	11	00	01
184	145	0000000	40044E04	000000000	288DF55035	0	0	0	1	0	01	11	00
185	146	0000000	00089C08	000000000	511BEAA06A	0	0	0	0	1	11	01	11
186	147	0000000	00113810	000000000	2237D540D5	0	0	0	0	1	01	11	01
187	148	0000000	00227021	000000000	446FAA81AA	0	0	0	0	1	11	01	11
188	149	0000000	0044E042	000000000	08DF550355	0	0	0	1	0	10	11	01
189	150	0000000	0089C085	000000000	11BEAA06AA	0	1	0	1	0	10	10	11
190	151	0000000	0113810A	000000000	237D540D54	0	0	0	0	0	10	10	10
191	152	0000000	02270215	000000000	46FAA81AA9	0	0	0	1	1	10	10	10
192	153	0000000	044E042A	000000000	0DF5503553	0	0	0	1	1	10	10	10
193	154	0000000	089C0854	000000000	1BEAA06AA7	0	1	0	1	0	01	10	10
194	155	0000000	113810A8	000000000	37D540D54E	0	0	0	1	0	01	01	10
195	156	0000000	22702150	000000000	6FAA81AA9D	0	0	0	1	0	11	01	01
196	157	0000000	44E042A0	000000000	5F5503553A	0	1	0	0	0	10	11	01
197	158	0000000	09C08540	000000000	3EAA06AA75	0	1	0	1	0	10	10	11
198	159	0000000	13810A80	000000000	7D540D54EA	0	1	0	0	1	10	10	10
199	160	0000000	27021500	000000000	7AA81AA9D5	0	0	0	1	1	10	10	10
200	161	0000000	4E042A00	000000000	75503553AB	0	0	0	0	0	10	10	10
201	162	0000000	1C085400	000000000	6AA06AA756	0	0	0	1	1	10	10	10
202	163	0000000	3810A800	000000000	5540D54EAC	0	0	0	0	0	10	10	10
203	164	0000000	70215000	000000000	2A81AA9D58	0	0	0	1	1	10	10	10
204	165	0000000	6042A001	000000000	5503553AB0	0	0	0	0	0	10	10	10
205	166	0000000	40854002	000000000	2A06AA7561	0	1	0	0	1	10	10	10
206	167	0000000	010A8004	000000000	540D54EAC3	0	0	0	0	0	10	10	10
207	168	0000000	02150009	000000000	281AA9D586	0	0	0	0	0	10	10	10
208	169	0000000	042A0012	000000000	503553AB0C	0	0	0	0	0	10	10	10
209	170	0000000	08540024	000000000	206AA75618	0	0	0	0	0	10	10	10
210	171	0000000	10A80048	000000000	40D54EAC30	0	1	0	1	0	01	10	10
211	172	0000000	21500091	000000000	01AA9D5861	0	0	0	1	0	01	01	10
212	173	0000000	42A00122	000000000	03553AB0C3	0	1	0	0	0	11	01	01
213	174	0000000	05400244	000000000	06AA756186	0	0	0	1	0	10	11	01
214	175	0000000	0A800488	000000000	0D54EAC30D	0	1	0	0	1	01	10	11
215	176	0000000	15000911	000000000	1AA9D5861A	0	0	0	1	0	01	01	10
216	177	0000000	2A001223	000000000	3553AB0C35	0	0	0	0	1	10	01	01
217	178	0000000	54002446	000000000	6AA756186A	0	0	0	1	1	00	10	01
218	179	0000000	2800488D	000000000	554EAC30D5	0	0	0	0	0	01	00	10
219	180	0000000	5000911B	000000000	2A9D5861AA	0	0	0	1	0	00	01	00
220	181	0000000	20012236	000000000	553AB0C355	0	0	0	0	0	11	00	01
221	182	0000000	4002446C	000000000	2A756186AA	0	0	0	0	1	10	11	00
222	183	0000000	000488D9	000000000	54EAC30D54	0	0	0	1	1	01	10	11
223	184	0000000	000911B2	000000000	29D5861AA8	0	0	0	1	0	01	01	10
224	185	0000000	00122364	000000000	53AB0C3550	0	0	0	1	0	11	01	01
225	186	0000000	002446C8	000000000	2756186AA0	0	0	0	0	1	01	11	01
226	187	0000000	00488D90	000000000	4EAC30D540	0	0	0	1	0	10	01	11
227	188	0000000	00911B20	000000000	1D5861AA81	0	1	0	0	1	00	10	01
228	189	0000000	01223640	000000000	3AB0C35502	0	0	0	1	1	01	00	10
229	190	0000000	02446C80	000000000	756186AA05	0	0	0	0	1	01	01	00
230	191	0000000	0488D901	000000000	6AC30D540B	0	1	0	1	1	11	01	01
231	192	0000000	0911B203	000000000	55861AA817	0	0	0	1	0	10	11	01

```
232   193    0000000  12236407  000000000  2B0C35502F      0  0  0  0    0  01     10   11
233   194    0000000  2446C80E  000000000  56186AA05F      0  0  0  0    1  00     01   10
234   195    0000000  488D901C  000000000  2C30D540BF      0  1  0  0    1  11     00   01
235   196    0000000  111B2039  000000000  5861AA817E      0  0  0  0    1  10     11   00
236   197    0000000  22364072  000000000  30C35502FD      0  0  0  1    1  01     10   11
237   198    0000000  446C80E4  000000000  6186AA05FB      0  0  0  1    0  01     01   10
238   199    0000000  08D901C8  000000000  430D540BF6      0  1  0  0    0  11     01   01
239   200    0000000  11B20391  000000000  061AA817EC      0  1  0  0    0  10     11   01

Z[0]  = 3D
Z[1]  = C1
Z[2]  = F0
Z[3]  = BB
Z[4]  = 58
Z[5]  = 1E
Z[6]  = 42
Z[7]  = 42
Z[8]  = 4B
Z[9]  = 8E
Z[10] = C1
Z[11] = 2A
Z[12] = 40
Z[13] = 63
Z[14] = 7A
Z[15] = 1E

==============================================================================================
         Reload this pattern into the LFSRs
         Hold content of Summation Combiner regs and calculate new C[t+1] and Z values
==============================================================================================
LFSR1  <= 04B583D
LFSR2  <= 208E1EC1
LFSR3  <= 063C142F0
LFSR4  <= 0F7A2A42BB
C[t+1] <= 10

==============================================================================================
         Generating 125 key symbols (encryption/decryption sequence)
==============================================================================================
240     1    04B583D  208E1EC1  063C142F0  0F7A2A42BB      0  1  0  0    0  10     11   01
241     2    096B07A  411C3D82  0C78285E1  1EF4548577      1  0  1  1    1  10     10   11
242     3    12D60F4  02387B04  18F050BC3  3DE8A90AEF      0  0  1  1    0  01     10   10
243     4    05AC1E9  0470F609  11E0A1786  7BD15215DF      0  0  0  1    0  01     01   10
244     5    0B583D2  08E1EC13  03C142F0C  77A2A42BBF      1  1  0  1    0  00     01   01
245     6    16B07A5  11C3D827  078285E18  6F4548577E      0  1  0  0    1  11     00   01
246     7    0D60F4B  2387B04F  0F050BC30  5E8A90AEFD      1  1  1  1    1  00     11   00
247     8    1AC1E97  470F609E  1E0A17860  3D15215DFA      1  0  1  0    0  11     00   11
248     9    1583D2E  0E1EC13D  1C142F0C0  7A2A42BBF4      0  0  1  0    0  01     11   00
249    10    0B07A5D  1C3D827B  18285E181  74548577E9      1  0  1  0    1  10     01   11
250    11    160F4BB  387B04F7  1050BC302  68A90AEFD2      0  0  0  1    1  00     10   01
251    12    0C1E976  70F609EE  00A178605  515215DFA5      1  1  0  0    0  00     00   10
252    13    183D2ED  61EC13DD  0142F0C0B  22A42BBF4B      1  1  0  1    1  01     00   00
253    14    107A5DA  43D827BA  0285E1817  4548577E97      0  1  0  0    0  00     01   00
254    15    00F4BB4  07B04F74  050BC302F  0A90AEFD2E      0  1  0  1    0  10     00   01
255    16    01E9769  0F609EE8  0A178605E  15215DFA5C      0  0  1  0    1  11     10   00
256    17    03D2ED3  1EC13DD0  142F0C0BD  2A42BBF4B9      0  1  0  0    0  00     11   10
257    18    07A5DA7  3D827BA0  085E1817B  548577E972      0  1  1  1    1  11     00   11
```

Sample Data

258	19	0F4BB4F	7B04F740	10BC302F6	290AEFD2E5	1	0	0	0	0	01	11	00
259	20	1E9769F	7609EE80	0178605ED	5215DFA5CA	1	0	0	0	0	10	01	11
260	21	1D2ED3F	6C13DD01	02F0C0BDA	242BBF4B94	1	0	0	0	1	00	10	01
261	22	1A5DA7E	5827BA03	05E1817B4	48577E9729	1	0	0	0	1	01	00	10
262	23	14BB4FC	304F7407	0BC302F69	10AEFD2E53	0	0	1	1	1	00	01	00
263	24	09769F9	609EE80E	178605ED2	215DFA5CA7	1	1	0	0	0	10	00	01
264	25	12ED3F2	413DD01C	0F0C0BDA4	42BBF4B94F	0	0	1	1	0	00	10	00
265	26	05DA7E5	027BA038	1E1817B49	0577E9729F	0	0	1	0	1	01	00	10
266	27	0BB4FCA	04F74071	1C302F693	0AEFD2E53F	1	1	1	1	1	11	01	00
267	28	1769F95	09EE80E3	18605ED27	15DFA5CA7F	0	1	1	1	0	11	11	01
268	29	0ED3F2B	13DD01C6	10C0BDA4F	2BBF4B94FE	1	1	0	1	0	10	11	11
269	30	1DA7E56	27BA038D	01817B49F	577E9729FD	1	1	0	0	0	10	10	11
270	31	1B4FCAD	4F74071B	0302F693E	2EFD2E53FB	1	0	0	1	0	01	10	10
271	32	169F95B	1EE80E37	0605ED27D	5DFA5CA7F7	0	1	0	1	1	01	01	10
272	33	0D3F2B7	3DD01C6E	0C0BDA4FB	3BF4B94FEF	1	1	1	1	1	00	01	01
273	34	1A7E56F	7BA038DC	1817B49F6	77E9729FDE	1	1	1	1	0	01	00	01
274	35	14FCADF	774071B9	102F693ED	6FD2E53FBD	0	0	0	1	0	00	01	00
275	36	09F95BE	6E80E373	005ED27DB	5FA5CA7F7B	1	1	0	1	1	10	00	01
276	37	13F2B7C	5D01C6E7	00BDA4FB6	3F4B94FEF7	0	0	0	0	0	11	10	00
277	38	07E56F9	3A038DCE	017B49F6C	7E9729FDEE	0	0	0	1	0	00	11	10
278	39	0FCADF2	74071B9C	02F693ED8	7D2E53FBDD	1	0	0	0	1	10	00	11
279	40	1F95BE5	680E3738	05ED27DB0	7A5CA7F7BA	1	0	0	0	1	11	10	00
280	41	1F2B7CA	501C6E71	0BDA4FB60	74B94FEF74	1	0	1	1	0	01	11	10
281	42	1E56F94	2038DCE2	17B49F6C0	69729FDEE8	1	0	0	0	0	10	01	11
282	43	1CADF29	4071B9C4	0F693ED80	52E53FBDD1	1	0	1	1	1	11	10	01
283	44	195BE53	00E37389	1ED27DB01	25CA7F7BA3	1	1	1	1	1	01	11	10
284	45	12B7CA6	01C6E713	1DA4FB602	4B94FEF747	0	1	1	1	0	01	01	11
285	46	056F94C	038DCE26	1B49F6C04	1729FDEE8E	0	1	1	0	1	11	01	01
286	47	0ADF299	071B9C4D	1693ED808	2E53FBDD1C	1	0	0	0	0	10	11	01
287	48	15BE532	0E37389A	0D27DB011	5CA7F7BA38	0	0	1	1	0	10	10	11
288	49	0B7CA64	1C6E7135	1A4FB6022	394FEF7471	1	0	1	0	0	01	10	10
289	50	16F94C9	38DCE26A	149F6C044	729FDEE8E2	0	1	0	1	1	01	01	10
290	51	0DF2993	71B9C4D4	093ED8089	653FBDD1C4	1	1	1	0	0	00	01	01
291	52	1BE5327	637389A9	127DB0112	4A7F7BA388	1	0	0	0	1	11	00	01
292	53	17CA64E	46E71353	04FB60224	14FEF74710	0	1	0	1	1	01	11	00
293	54	0F94C9C	0DCE26A6	09F6C0448	29FDEE8E21	1	1	1	1	1	01	01	11
294	55	1F29939	1B9C4D4D	13ED80890	53FBDD1C42	1	1	0	1	0	00	01	01
295	56	1E53272	37389A9A	07DB01121	27F7BA3884	1	0	0	1	0	10	00	01
296	57	1CA64E5	6E713534	0FB602242	4FEF747108	1	0	1	1	1	00	10	00
297	58	194C9CB	5CE26A69	1F6C04485	1FDEE8E210	1	1	1	1	0	11	00	10
298	59	1299397	39C4D4D3	1ED80890A	3FBDD1C420	0	1	1	1	0	00	11	00
299	60	053272F	7389A9A6	1DB011214	7F7BA38840	0	1	1	0	0	11	00	11
300	61	0A64E5E	6713534C	1B6022428	7EF7471081	1	0	1	1	0	00	11	00
301	62	14C9CBD	4E26A699	16C044850	7DEE8E2102	0	0	0	1	1	10	00	11
302	63	099397A	1C4D4D32	0D80890A0	7BDD1C4205	1	0	1	1	1	00	10	00
303	64	13272F4	389A9A65	1B0112141	77BA38840B	0	1	1	1	1	00	00	10
304	65	064E5E8	713534CB	160224283	6F74710817	0	0	0	0	0	00	00	00
305	66	0C9CBD1	626A6997	0C0448507	5EE8E2102E	1	0	1	1	1	01	00	00
306	67	19397A3	44D4D32E	180890A0E	3DD1C4205C	1	1	1	1	1	11	01	00
307	68	1272F46	09A9A65D	10112141D	7BA38840B8	0	1	0	1	1	10	11	01
308	69	04E5E8C	13534CBA	00224283A	7747108171	0	0	0	0	0	01	10	11
309	70	09CBD19	26A69975	004485075	6E8E2102E3	1	1	0	1	0	10	01	10
310	71	1397A32	4D4D32EB	00890A0EA	5D1C4205C7	0	0	0	0	0	00	10	01
311	72	072F465	1A9A65D7	0112141D5	3A38840B8F	0	1	0	0	1	01	00	10
312	73	0E5E8CA	3534CBAF	0224283AA	747108171F	1	0	0	0	0	00	01	00
313	74	1CBD194	6A69975E	044850755	68E2102E3E	1	0	0	1	0	10	00	01
314	75	197A329	54D32EBC	0890A0EAB	51C4205C7D	1	1	1	1	0	01	10	00

Sample Data

315	76	12F4653	29A65D79	112141D56	238840B8FA	0	1	0	1	1	01	01	10
316	77	05E8CA6	534CBAF2	024283AAD	47108171F4	0	0	0	0	1	10	01	01
317	78	0BD194D	269975E5	04850755B	0E2102E3E9	1	1	0	0	0	11	10	01
318	79	17A329A	4D32EBCB	090A0EAB6	1C4205C7D2	0	0	1	0	0	00	11	10
319	80	0F46535	1A65D797	12141D56D	38840B8FA5	1	0	0	1	0	11	00	11
320	81	1E8CA6A	34CBAF2F	04283AADA	7108171F4B	1	1	0	0	1	01	11	00
321	82	1D194D5	69975E5F	0850755B4	62102E3E97	1	1	1	0	0	01	01	11
322	83	1A329AA	532EBCBF	10A0EAB68	44205C7D2F	1	0	0	0	0	11	01	01
323	84	1465355	265D797F	0141D56D1	0840B8FA5E	0	0	0	0	1	01	11	01
324	85	08CA6AB	4CBAF2FF	0283AADA2	108171F4BC	1	1	0	1	0	01	01	11
325	86	1194D56	1975E5FF	050755B45	2102E3E979	0	0	0	0	1	10	01	01
326	87	0329AAD	32EBCBFF	0A0EAB68A	4205C7D2F3	0	1	1	0	0	11	10	01
327	88	065355A	65D797FF	141D56D14	040B8FA5E7	0	1	0	0	0	00	11	10
328	89	0CA6AB4	4BAF2FFF	083AADA28	08171F4BCF	1	1	1	0	1	11	00	11
329	90	194D569	175E5FFF	10755B450	102E3E979E	1	0	0	0	0	01	11	00
330	91	129AAD3	2EBCBFFF	00EAB68A1	205C7D2F3C	0	1	0	0	0	10	01	11
331	92	05355A6	5D797FFF	01D56D142	40B8FA5E78	0	0	0	1	1	00	10	01
332	93	0A6AB4D	3AF2FFFE	03AADA285	0171F4BCF1	1	1	0	0	0	00	00	10
333	94	14D569B	75E5FFFD	0755B450A	02E3E979E2	0	1	0	1	0	01	00	00
334	95	09AAD37	6BCBFFFA	0EAB68A15	05C7D2F3C4	1	1	1	1	1	11	01	00
335	96	1355A6E	5797FFF4	1D56D142A	0B8FA5E788	0	1	1	1	0	11	11	01
336	97	06AB4DC	2F2FFFE8	1AADA2854	171F4BCF11	0	0	1	0	0	11	11	11
337	98	0D569B8	5E5FFFD0	155B450A9	2E3E979E23	1	0	0	0	0	11	11	11
338	99	1AAD370	3CBFFFA1	0AB68A153	5C7D2F3C46	1	1	1	0	0	10	11	11
339	100	155A6E0	797FFF43	156D142A7	38FA5E788D	0	0	0	1	1	01	10	11
340	101	0AB4DC0	72FFFE87	0ADA2854E	71F4BCF11B	1	1	1	1	1	10	01	10
341	102	1569B81	65FFFD0E	15B450A9D	63E979E236	0	1	0	1	0	11	10	01
342	103	0AD3703	4BFFFA1C	0B68A153B	47D2F3C46C	1	1	1	1	1	01	11	10
343	104	15A6E07	17FFF438	16D142A76	0FA5E788D8	0	1	0	1	1	10	01	11
344	105	0B4DC0F	2FFFE870	0DA2854EC	1F4BCF11B0	1	1	1	0	1	11	10	01
345	106	169B81F	5FFFD0E1	1B450A9D8	3E979E2360	0	1	1	1	0	01	11	10
346	107	0D3703F	3FFFA1C3	168A153B0	7D2F3C46C1	1	1	0	0	1	10	01	11
347	108	1A6E07E	7FFF4386	0D142A761	7A5E788D83	1	1	1	0	1	11	10	01
348	109	14DC0FD	7FFE870C	1A2854EC2	74BCF11B07	0	1	1	1	0	01	11	10
349	110	09B81FB	7FFD0E19	1450A9D84	6979E2360E	1	1	0	0	1	10	01	11
350	111	13703F6	7FFA1C33	08A153B09	52F3C46C1C	0	1	1	1	1	11	10	01
351	112	06E07EC	7FF43867	1142A7612	25E788D838	0	1	0	1	1	00	11	10
352	113	0DC0FD8	7FE870CF	02854EC25	4BCF11B071	1	1	0	1	1	11	00	11
353	114	1B81FB1	7FD0E19E	050A9D84B	179E2360E3	1	1	0	1	0	00	11	00
354	115	1703F62	7FA1C33D	0A153B096	2F3C46C1C7	0	1	1	0	0	11	00	11
355	116	0E07EC4	7F43867B	142A7612C	5E788D838E	1	0	0	0	0	01	11	00
356	117	1C0FD88	7E870CF6	0854EC259	3CF11B071C	1	1	1	1	1	01	01	11
357	118	181FB11	7D0E19ED	10A9D84B3	79E2360E38	1	0	0	1	1	11	01	01
358	119	103F622	7A1C33DA	0153B0967	73C46C1C71	0	0	0	1	0	10	11	01
359	120	007EC45	743867B5	02A7612CE	6788D838E3	0	0	0	1	1	01	10	11
360	121	00FD88B	6870CF6B	054EC259C	4F11B071C6	0	0	0	0	1	00	01	10
361	122	01FB117	50E19ED7	0A9D84B38	1E2360E38C	0	1	1	0	0	10	00	01
362	123	03F622F	21C33DAE	153B09671	3C46C1C718	0	1	0	0	1	11	10	00
363	124	07EC45F	43867B5C	0A7612CE2	788D838E30	0	1	1	1	0	01	11	10
364	125	0FD88BF	070CF6B9	14EC259C4	711B071C61	1	0	0	0	0	10	01	11

1.3 SECOND SET OF SAMPLE DATA

```
Initial values for the key, BD_ADDR and clock

K'c2[0]   = 00   K'c2[1]   = 00    K'c2[2]   = 00    K'c2[3]  = 00
K'c2[4]   = 00   K'c2[5]   = 00    K'c2[6]   = 00    K'c2[7]  = 00
K'c2[8]   = 00   K'c2[9]   = 00    K'c2[10]  = 00    K'c2[11] = 00
K'c2[12]  = 00   K'c2[13]  = 00    K'c2[14]  = 00    K'c2[15] = 00

Addr2[0] = 00   Addr2[1] = 00    Addr2[2] = 00
Addr2[3] = 00   Addr2[4] = 00    Addr2[5] = 00

CL2[0]  = 00   CL2[1]  = 00    CL2[2]  = 00    CL2[3]  = 03


==========================================================================================
         Fill LFSRs with initial data
==========================================================================================

  t  clk#    LFSR1    LFSR2     LFSR3      LFSR4           X1 X2 X3 X4   Z  C[t+1] C[t] C[t-1]

  0     0    0000000* 00000000* 000000000* 0000000000*     0  0  0  0    0  00     00   00
  1     1    0000001* 00000001* 000000001* 0000000001*     0  0  0  0    0  00     00   00
  2     2    0000002* 00000002* 000000002* 0000000003*     0  0  0  0    0  00     00   00
  3     3    0000004* 00000004* 000000004* 0000000007*     0  0  0  0    0  00     00   00
  4     4    0000008* 00000008* 000000008* 000000000E*     0  0  0  0    0  00     00   00
  5     5    0000010* 00000010* 000000010* 000000001C*     0  0  0  0    0  00     00   00
  6     6    0000020* 00000020* 000000020* 0000000038*     0  0  0  0    0  00     00   00
  7     7    0000040* 00000040* 000000040* 0000000070*     0  0  0  0    0  00     00   00
  8     8    0000080* 00000080* 000000080* 00000000E0*     0  0  0  0    0  00     00   00
  9     9    0000100* 00000100* 000000100* 00000001C0*     0  0  0  0    0  00     00   00
 10    10    0000200* 00000200* 000000200* 0000000380*     0  0  0  0    0  00     00   00
 11    11    0000400* 00000400* 000000400* 0000000700*     0  0  0  0    0  00     00   00
 12    12    0000800* 00000800* 000000800* 0000000E00*     0  0  0  0    0  00     00   00
 13    13    0001000* 00001000* 000001000* 0000001C00*     0  0  0  0    0  00     00   00
 14    14    0002000* 00002000* 000002000* 0000003800*     0  0  0  0    0  00     00   00
 15    15    0004000* 00004000* 000004000* 0000007000*     0  0  0  0    0  00     00   00
 16    16    0008000* 00008000* 000008000* 000000E000*     0  0  0  0    0  00     00   00
 17    17    0010000* 00010000* 000010000* 000001C000*     0  0  0  0    0  00     00   00
 18    18    0020000* 00020000* 000020000* 0000038000*     0  0  0  0    0  00     00   00
 19    19    0040000* 00040000* 000040000* 0000070000*     0  0  0  0    0  00     00   00
 20    20    0080000* 00080000* 000080000* 00000E0000*     0  0  0  0    0  00     00   00
 21    21    0100000* 00100000* 000100000* 00001C0000*     0  0  0  0    0  00     00   00
 22    22    0200000* 00200000* 000200000* 0000380000*     0  0  0  0    0  00     00   00
 23    23    0400000* 00400000* 000400000* 0000700000*     0  0  0  0    0  00     00   00
 24    24    0800000* 00800000* 000800000* 0000E00000*     1  1  0  0    0  01     00   00
 25    25    1000000* 01000000* 001000000* 0001C00000*     0  0  0  0    0  00     00   00
 26    26    0000001  02000000* 002000000* 0003800000*     0  0  0  0    0  00     00   00
 27    27    0000002  04000000* 004000000* 0007000000*     0  0  0  0    0  00     00   00
 28    28    0000004  08000000* 008000000* 000E000000*     0  0  0  0    0  00     00   00
 29    29    0000008  10000000* 010000000* 001C000000*     0  0  0  0    0  00     00   00
 30    30    0000010  20000000* 020000000* 0038000000*     0  0  0  0    0  00     00   00
 31    31    0000020  40000000* 040000000* 0070000000*     0  0  0  0    0  00     00   00
 32    32    0000040  00000001  080000000* 00E0000000*     0  0  1  1    0  01     00   00
 33    33    0000080  00000002  100000000* 01C0000000*     0  0  0  1    1  00     00   00
 34    34    0000101  00000004  000000001  0380000000*     0  0  0  1    1  00     00   00
```

```
 35    35    0000202  00000008  000000002  0700000000*    0  0  0  0    0  00    00  00
 36    36    0000404  00000010  000000004  0E00000000*    0  0  0  0    0  00    00  00
 37    37    0000808  00000020  000000008  1C00000000*    0  0  0  0    0  00    00  00
 38    38    0001011  00000040  000000011  3800000000*    0  0  0  0    0  00    00  00
 39    39    0002022  00000080  000000022  7000000000*    0  0  0  0    0  00    00  00
=============================================================================================
         Start clocking Summation Combiner
=============================================================================================
 40     1    0004044  00000100  000000044  6000000001     0  0  0  0    0  00    00  00
 41     2    0008088  00000200  000000088  4000000003     0  0  0  0    0  00    00  00
 42     3    0010111  00000400  000000111  0000000007     0  0  0  0    0  00    00  00
 43     4    0020222  00000800  000000222  000000000E     0  0  0  0    0  00    00  00
 44     5    0040444  00001001  000000444  000000001D     0  0  0  0    0  00    00  00
 45     6    0080888  00002002  000000888  000000003B     0  0  0  0    0  00    00  00
 46     7    0101111  00004004  000001111  0000000077     0  0  0  0    0  00    00  00
 47     8    0202222  00008008  000002222  00000000EE     0  0  0  0    0  00    00  00
 48     9    0404444  00010011  000004444  00000001DD     0  0  0  0    0  00    00  00
 49    10    0808888  00020022  000008888  00000003BB     1  0  0  0    1  00    00  00
 50    11    1011110  00040044  000011111  0000000777     0  0  0  0    0  00    00  00
 51    12    0022221  00080088  000022222  0000000EEE     0  0  0  0    0  00    00  00
 52    13    0044442  00100110  000044444  0000001DDD     0  0  0  0    0  00    00  00
 53    14    0088884  00200220  000088888  0000003BBB     0  0  0  0    0  00    00  00
 54    15    0111109  00400440  000111111  0000007777     0  0  0  0    0  00    00  00
 55    16    0222212  00800880  000222222  000000EEEE     0  1  0  0    1  00    00  00
 56    17    0444424  01001100  000444444  000001DDDD     0  0  0  0    0  00    00  00
 57    18    0888848  02002200  000888888  000003BBBB     1  0  0  0    1  00    00  00
 58    19    1111090  04004400  001111110  0000077777     0  0  0  0    0  00    00  00
 59    20    0222120  08008800  002222220  00000EEEEE     0  0  0  0    0  00    00  00
 60    21    0444240  10011000  004444440  00001DDDDD     0  0  0  0    0  00    00  00
 61    22    0888480  20022000  008888880  00003BBBBB     1  0  0  0    1  00    00  00
 62    23    1110900  40044000  011111100  0000777777     0  0  0  0    0  00    00  00
 63    24    0221200  00088001  022222200  0000EEEEEE     0  0  0  0    0  00    00  00
 64    25    0442400  00110003  044444400  0001DDDDDD     0  0  0  0    0  00    00  00
 65    26    0884800  00220006  088888800  0003BBBBBB     1  0  1  0    0  01    00  00
 66    27    1109000  0044000C  111111000  0007777777     0  0  0  0    1  01    01  00
 67    28    0212001  00880018  022222001  000EEEEEEE     0  1  0  0    0  11    01  01
 68    29    0424002  01100031  044444002  001DDDDDDC     0  0  0  0    1  01    11  01
 69    30    0848004  02200062  088888004  003BBBBBB8     1  0  1  0    1  10    01  11
 70    31    1090008  044000C4  111110008  0077777770     0  0  0  0    0  00    10  01
 71    32    0120010  08800188  022220010  00EEEEEEE0     0  1  0  1    0  00    00  10
 72    33    0240020  11000311  044440020  01DDDDDDC1     0  0  0  1    1  00    00  00
 73    34    0480040  22000622  088880040  03BBBBBB83     0  0  1  1    0  01    00  00
 74    35    0900081  44000C44  111100080  0777777707     1  0  0  0    0  00    01  00
 75    36    1200103  08001888  022200101  0EEEEEEE0E     0  0  0  1    1  11    00  01
 76    37    0400207  10003111  044400202  1DDDDDDC1D     0  0  0  1    0  01    11  00
 77    38    080040E  20006222  088800404  3BBBBBB83B     1  0  1  1    0  01    01  11
 78    39    100081C  4000C444  111000808  7777777077     0  0  0  0    1  10    01  01
 79    40    0001038  00018888  022001010  6EEEEEE0EF     0  0  0  1    1  00    10  01
 80    41    0002070  00031110  044002020  5DDDDDC1DE     0  0  0  1    1  01    00  10
 81    42    00040E0  00062220  088004040  3BBBBB83BC     0  0  1  1    1  00    01  00
 82    43    00081C1  000C4440  110008081  7777770779     0  0  0  0    0  11    00  01
 83    44    0010383  00188880  020010103  6EEEEE0EF2     0  0  0  1    0  01    11  00
 84    45    0020707  00311100  040020206  5DDDDC1DE5     0  0  0  1    0  10    01  11
 85    46    0040E0E  00622200  08004040C  3BBBB83BCB     0  0  1  1    0  11    10  01
 86    47    0081C1D  00C44400  100080819  7777707797     0  1  0  0    0  00    11  10
 87    48    010383A  01888801  000101032  6EEEE0EF2F     0  1  0  1    0  11    00  11
 88    49    0207075  03111003  000202064  5DDDC1DE5E     0  0  0  1    0  01    11  00
```

Sample Data

89	50	040E0EA	06222006	0004040C8	3BBB83BCBC	0	0	0	1	0	10	01	11
90	51	081C1D5	0C44400C	000808191	7777077979	1	0	0	0	1	00	10	01
91	52	10383AB	18888018	001010323	6EEE0EF2F2	0	1	0	1	0	00	00	10
92	53	0070756	31110030	002020646	5DDC1DE5E5	0	0	0	1	1	00	00	00
93	54	00E0EAC	62220060	004040C8C	3BB83BCBCB	0	0	0	1	1	00	00	00
94	55	01C1D59	444400C1	008081919	7770779797	0	0	0	0	0	00	00	00
95	56	0383AB2	08880183	010103232	6EE0EF2F2F	0	1	0	1	0	01	00	00
96	57	0707565	11100307	020206464	5DC1DE5E5F	0	0	0	1	0	00	01	00
97	58	0E0EACA	2220060E	04040C8C8	3B83BCBCBF	1	0	0	1	0	10	00	01
98	59	1C1D594	44400C1C	080819191	770779797E	1	0	1	0	0	00	10	00
99	60	183AB28	08801838	101032323	6E0EF2F2FC	1	1	0	0	0	00	00	10
100	61	1075650	11003070	002064647	5C1DE5E5F8	0	0	0	0	0	00	00	00
101	62	00EACA1	220060E0	0040C8C8E	383BCBCBF0	0	0	0	0	0	00	00	00
102	63	01D5943	4400C1C0	00819191D	70779797E0	0	0	0	0	0	00	00	00
103	64	03AB286	08018380	01032323A	60EF2F2FC1	0	0	0	1	1	00	00	00
104	65	075650C	10030701	020646475	41DE5E5F82	0	0	0	1	1	00	00	00
105	66	0EACA18	20060E02	040C8C8EA	03BCBCBF04	1	0	0	1	0	01	00	00
106	67	1D59430	400C1C05	0819191D4	0779797E09	1	0	1	0	1	00	01	00
107	68	1AB2861	0018380A	1032323A9	0EF2F2FC12	1	0	0	1	0	10	00	01
108	69	15650C3	00307015	006464752	1DE5E5F825	0	0	0	1	1	11	10	00
109	70	0ACA186	0060E02A	00C8C8EA4	3BCBCBF04B	1	0	0	1	1	00	11	10
110	71	159430C	00C1C055	019191D48	779797E097	0	1	0	1	0	11	00	11
111	72	0B28618	018380AA	032323A90	6F2F2FC12F	1	1	0	0	1	01	11	00
112	73	1650C30	03070154	064647520	5E5E5F825E	0	0	0	0	1	11	01	11
113	74	0CA1860	060E02A8	0C8C8EA40	3CBCBF04BC	1	0	1	1	0	11	11	01
114	75	19430C0	0C1C0550	19191D480	79797E0979	1	0	1	0	1	11	11	11
115	76	1286180	18380AA0	12323A900	72F2FC12F2	0	0	0	1	0	11	11	11
116	77	050C301	30701541	046475201	65E5F825E5	0	0	0	1	0	11	11	11
117	78	0A18602	60E02A82	08C8EA402	4BCBF04BCB	1	1	1	1	1	10	11	11
118	79	1430C04	41C05505	1191D4804	1797E09796	0	1	0	1	0	10	10	11
119	80	0861808	0380AA0A	0323A9008	2F2FC12F2C	1	1	0	0	0	01	10	10
120	81	10C3011	07015415	064752011	5E5F825E59	0	0	0	0	1	00	01	10
121	82	0186022	0E02A82A	0C8EA4022	3CBF04BCB2	0	0	1	1	0	10	00	01
122	83	030C045	1C055054	191D48044	797E097964	0	0	1	0	1	11	10	00
123	84	061808A	380AA0A8	123A90088	72FC12F2C9	0	0	0	1	0	00	11	10
124	85	0C30115	70154151	047520111	65F825E593	1	0	0	1	0	11	00	11
125	86	186022A	602A82A3	08EA40222	4BF04BCB26	1	0	1	1	0	00	11	00
126	87	10C0455	40550546	11D480444	17E097964C	0	0	0	1	1	10	00	11
127	88	01808AA	00AA0A8D	03A900888	2FC12F2C99	0	1	0	1	0	00	10	00
128	89	0301155	0154151A	075201111	5F825E5932	0	0	0	1	1	01	00	10
129	90	06022AA	02A82A34	0EA402222	3F04BCB264	0	1	1	0	1	00	01	00
130	91	0C04555	05505468	1D4804445	7E097964C9	1	0	1	0	0	10	00	01
131	92	1808AAA	0AA0A8D0	1A900888A	7C12F2C992	1	1	1	0	1	00	10	00
132	93	1011555	154151A1	152011115	7825E59324	0	0	0	0	0	01	00	10
133	94	0022AAB	2A82A342	0A402222B	704BCB2648	0	1	1	0	1	00	01	00
134	95	0045556	55054684	148044457	6097964C91	0	0	0	1	1	11	00	01
135	96	008AAAC	2A0A8D09	0900888AE	412F2C9923	0	0	1	0	0	01	11	00
136	97	0115559	54151A12	12011115D	025E593246	0	0	0	0	1	11	01	11
137	98	022AAB2	282A3424	0402222BA	04BCB2648D	0	0	0	1	0	10	11	01
138	99	0455564	50546848	080444575	097964C91A	0	0	1	0	1	01	10	11
139	100	08AAAC8	20A8D090	100888AEA	12F2C99235	1	1	0	1	0	10	01	10
140	101	1155591	4151A120	0011115D5	25E593246A	0	0	0	1	1	00	10	01
141	102	02AAB22	02A34240	002222BAA	4BCB2648D5	0	1	0	1	0	00	00	10
142	103	0555644	05468481	004445755	17964C91AB	0	0	0	1	1	00	00	00
143	104	0AAAC88	0A8D0903	00888AEAA	2F2C992357	1	1	0	0	0	01	00	00
144	105	1555911	151A1206	011115D55	5E593246AE	0	0	0	0	1	01	01	00
145	106	0AAB222	2A34240C	02222BAAA	3CB2648D5C	1	0	0	1	1	11	01	01

Sample Data

146	107	1556445	54684818	044457555	7964C91AB8	0	0	0	0	1	01	11	01
147	108	0AAC88B	28D09030	0888AEAAA	72C9923571	1	1	1	1	1	01	01	11
148	109	1559117	51A12060	11115D555	6593246AE2	0	1	0	1	1	11	01	01
149	110	0AB222F	234240C0	0222BAAAB	4B2648D5C5	1	0	0	0	0	10	11	01
150	111	156445F	46848180	044575557	164C91AB8A	0	1	0	0	1	01	10	11
151	112	0AC88BF	0D090301	088AEAAAE	2C99235714	1	0	1	1	0	10	01	10
152	113	159117F	1A120602	1115D555D	593246AE28	0	0	0	0	0	00	10	01
153	114	0B222FE	34240C04	022BAAABA	32648D5C51	1	0	0	0	1	01	00	10
154	115	16445FD	68481809	045755574	64C91AB8A2	0	0	0	1	0	00	01	00
155	116	0C88BFA	50903012	08AEAAAE8	4992357144	1	1	1	1	0	01	00	01
156	117	19117F5	21206024	115D555D1	13246AE288	1	0	0	0	0	00	01	00
157	118	1222FEA	4240C048	02BAAABA2	2648D5C511	0	0	0	0	0	11	00	01
158	119	0445FD5	04818090	057555744	4C91AB8A23	0	1	0	1	1	01	11	00
159	120	088BFAA	09030120	0AEAAAE88	1923571446	1	0	1	0	1	10	01	11
160	121	1117F55	12060240	15D555D11	3246AE288D	0	0	0	0	0	00	10	01
161	122	022FEAA	240C0480	0BAAABA22	648D5C511B	0	0	1	1	0	00	00	10
162	123	045FD54	48180900	175557444	491AB8A237	0	0	0	0	0	00	00	00
163	124	08BFAA9	10301200	0EAAAE889	123571446F	1	0	1	0	0	01	00	00
164	125	117F553	20602400	1D555D113	246AE288DF	0	0	1	0	0	00	01	00
165	126	02FEAA7	40C04800	1AAABA227	48D5C511BE	0	1	1	1	1	10	00	01
166	127	05FD54F	01809001	15557444F	11AB8A237D	0	1	0	1	0	00	10	00
167	128	0BFAA9F	03012002	0AAAE889E	23571446FA	1	0	1	0	0	00	00	10
168	129	17F553F	06024004	1555D113D	46AE288DF5	0	0	0	1	1	00	00	00
169	130	0FEAA7E	0C048008	0AABA227A	0D5C511BEA	1	0	1	0	0	01	00	00
170	131	1FD54FC	18090011	1557444F5	1AB8A237D5	1	0	0	1	1	00	01	00
171	132	1FAA9F9	30120022	0AAE889EB	3571446FAA	1	0	1	0	0	10	00	01
172	133	1F553F2	60240044	155D113D7	6AE288DF55	1	0	0	1	0	00	10	00
173	134	1EAA7E4	40480089	0ABA227AE	55C511BEAA	1	0	1	1	1	00	00	10
174	135	1D54FC9	00900113	157444F5D	2B8A237D54	1	1	0	1	1	01	00	00
175	136	1AA9F93	01200227	0AE889EBA	571446FAA8	1	0	1	0	1	00	01	00
176	137	1553F26	0240044E	15D113D75	2E288DF550	0	0	0	0	0	11	00	01
177	138	0AA7E4C	0480089C	0BA227AEA	5C511BEAA0	1	1	1	0	0	00	11	00
178	139	154FC98	09001138	17444F5D4	38A237D540	0	0	0	1	1	10	00	11
179	140	0A9F931	12002270	0E889EBA9	71446FAA81	1	0	1	0	0	00	10	00
180	141	153F262	240044E0	1D113D753	6288DF5503	0	0	1	1	0	00	00	10
181	142	0A7E4C5	480089C0	1A227AEA7	4511BEAA06	1	0	1	0	0	01	00	00
182	143	14FC98B	10011381	1444F5D4F	0A237D540D	0	0	0	0	1	01	01	00
183	144	09F9316	20022702	0889EBA9E	1446FAA81A	1	0	1	0	1	11	01	01
184	145	13F262D	40044E04	1113D753D	288DF55035	0	0	0	1	0	10	11	01
185	146	07E4C5A	00089C08	0227AEA7A	511BEAA06A	0	0	0	0	0	01	10	11
186	147	0FC98B4	00113810	044F5D4F5	2237D540D5	1	0	0	0	0	01	01	10
187	148	1F93169	00227021	089EBA9EB	446FAA81AA	1	0	1	0	1	11	01	01
188	149	1F262D2	0044E042	113D753D7	08DF550355	1	0	0	1	1	10	11	01
189	150	1E4C5A4	0089C085	027AEA7AE	11BEAA06AA	1	1	0	1	1	10	10	11
190	151	1C98B48	0113810A	04F5D4F5C	237D540D54	1	0	0	0	1	10	10	10
191	152	1931691	02270215	09EBA9EB8	46FAA81AA9	1	0	1	1	1	01	10	10
192	153	1262D22	044E042A	13D753D71	0DF5503553	0	0	0	1	0	01	01	10
193	154	04C5A44	089C0854	07AEA7AE2	1BEAA06AA7	0	1	0	1	1	11	01	01
194	155	098B488	113810A8	0F5D4F5C4	37D540D54E	1	0	1	1	0	11	11	01
195	156	1316910	22702150	1EBA9EB89	6FAA81AA9D	0	0	1	1	1	11	11	11
196	157	062D220	44E042A0	1D753D712	5F5503553A	0	1	1	0	1	11	11	11
197	158	0C5A440	09C08540	1AEA7AE25	3EAA06AA75	1	1	1	1	1	10	11	11
198	159	18B4880	13810A80	15D4F5C4B	7D540D54EA	1	1	0	0	0	10	10	11
199	160	1169100	27021500	0BA9EB897	7AA81AA9D5	0	0	1	1	0	01	10	10
200	161	02D2201	4E042A00	1753D712E	75503553AB	0	0	0	0	1	00	01	10
201	162	05A4403	1C085400	0EA7AE25C	6AA06AA756	0	0	1	1	0	10	00	01
202	163	0B48807	3810A800	1D4F5C4B8	5540D54EAC	1	0	1	0	0	00	10	00

Sample Data

203	164	169100F	70215000	1A9EB8971	2A81AA9D58	0	0	1	1	0	00	00	10
204	165	0D2201E	6042A001	153D712E3	5503553AB0	1	0	0	0	1	00	00	00
205	166	1A4403C	40854002	0A7AE25C6	2A06AA7561	1	1	1	0	1	01	00	00
206	167	1488079	010A8004	14F5C4B8D	540D54EAC3	0	0	0	0	1	01	01	00
207	168	09100F2	02150009	09EB8971B	281AA9D586	1	0	1	0	1	11	01	01
208	169	12201E5	042A0012	13D712E37	503553AB0C	0	0	0	0	1	01	11	01
209	170	04403CA	08540024	07AE25C6E	206AA75618	0	0	0	0	1	11	01	11
210	171	0880795	10A80048	0F5C4B8DD	40D54EAC30	1	1	1	1	1	11	11	01
211	172	1100F2A	21500091	1EB8971BA	01AA9D5861	0	0	1	1	1	11	11	11
212	173	0201E54	42A00122	1D712E374	03553AB0C3	0	1	1	0	1	11	11	11
213	174	0403CA9	05400244	1AE25C6E9	06AA756186	0	0	1	1	1	11	11	11
214	175	0807952	0A800488	15C4B8DD3	0D54EAC30D	1	1	0	0	1	11	11	11
215	176	100F2A5	15000911	0B8971BA6	1AA9D5861A	0	0	1	1	1	11	11	11
216	177	001E54A	2A001223	1712E374C	3553AB0C35	0	0	0	0	1	00	11	11
217	178	003CA94	54002446	0E25C6E98	6AA756186A	0	0	1	1	0	11	00	11
218	179	0079528	2800488D	1C4B8DD31	554EAC30D5	0	0	1	0	0	01	11	00
219	180	00F2A50	5000911B	18971BA62	2A9D5861AA	0	0	1	1	1	10	01	11
220	181	01E54A0	20012236	112E374C4	553AB0C355	0	0	0	0	0	00	10	01
221	182	03CA940	4002446C	025C6E988	2A756186AA	0	0	0	0	0	01	00	10
222	183	0795280	000488D9	04B8DD310	54EAC30D54	0	0	0	1	0	00	01	00
223	184	0F2A500	000911B2	0971BA620	29D5861AA8	1	0	1	1	1	10	00	01
224	185	1E54A00	00122364	12E374C40	53AB0C3550	1	0	0	1	0	00	10	00
225	186	1CA9400	002446C8	05C6E9880	2756186AA0	1	0	0	0	1	01	00	10
226	187	1952800	00488D90	0B8DD3101	4EAC30D540	1	0	1	1	0	11	01	00
227	188	12A5000	00911B20	171BA6202	1D5861AA81	0	1	0	0	0	10	11	01
228	189	054A000	01223640	0E374C404	3AB0C35502	0	0	1	1	0	10	10	11
229	190	0A94000	02446C80	1C6E98808	756186AA05	1	0	1	0	0	01	10	10
230	191	1528001	0488D901	18DD31011	6AC30D540B	0	1	1	1	0	10	01	10
231	192	0A50003	0911B203	11BA62023	55861AA817	1	0	0	1	0	11	10	01
232	193	14A0006	12236407	0374C4047	2B0C35502F	0	0	0	0	1	11	11	10
233	194	094000C	2446C80E	06E98808E	56186AA05F	1	0	0	0	0	11	11	11
234	195	1280018	488D901C	0DD31011D	2C30D540BF	0	1	1	0	1	11	11	11
235	196	0500030	111B2039	1BA62023A	5861AA817E	0	0	1	0	0	11	11	11
236	197	0A00060	22364072	174C40475	30C35502FD	1	0	0	1	1	11	11	11
237	198	14000C0	446C80E4	0E98808EA	6186AA05FB	0	0	1	1	1	11	11	11
238	199	0800180	08D901C8	1D31011D5	430D540BF6	1	1	1	0	0	10	11	11
239	200	1000301	11B20391	1A62023AB	061AA817EC	0	1	1	0	0	10	10	11

```
Z[0]  = 25
Z[1]  = 45
Z[2]  = 6B
Z[3]  = 55
Z[4]  = 5F
Z[5]  = C2
Z[6]  = 20
Z[7]  = E5
Z[8]  = C4
Z[9]  = F8
Z[10] = 3A
Z[11] = F1
Z[12] = FF
Z[13] = 89
Z[14] = 02
Z[15] = 35

==========================================================================================
         Reload this pattern into the LFSRs
```

Sample Data

```
         Hold content of Summation Combiner regs and calculate new C[t+1] and Z values
==========================================================================================
LFSR1  <= 1C45F25
LFSR2  <= 7FF8C245
LFSR3  <= 1893A206B
LFSR4  <= 1A02F1E555
C[t+1] <= 10

==========================================================================================
         Generating 125 key symbols (encryption/decryption sequence)
==========================================================================================
240     1    1C45F25  7FF8C245  1893A206B  1A02F1E555      1  1  1  0    1  10     10   11
241     2    188BE4A  7FF1848B  1127440D7  3405E3CAAB      1  1  0  0    0  01     10   10
242     3    1117C95  7FE30917  024E881AF  680BC79557      0  1  0  0    0  01     01   10
243     4    022F92B  7FC6122F  049D1035E  50178F2AAF      0  1  0  0    0  11     01   01
244     5    045F257  7F8C245E  093A206BD  202F1E555E      0  1  1  0    1  10     11   01
245     6    08BE4AE  7F1848BC  127440D7A  405E3CAABC      1  0  0  0    1  01     10   11
246     7    117C95C  7E309178  04E881AF4  00BC795579      0  0  0  1    0  01     01   10
247     8    02F92B8  7C6122F0  09D1035E8  0178F2AAF2      0  0  1  0    0  11     01   01
248     9    05F2570  78C245E1  13A206BD0  02F1E555E5      0  1  0  1    1  10     11   01
249    10    0BE4AE1  71848BC2  07440D7A0  05E3CAABCA      1  1  0  1    1  10     10   11
250    11    17C95C3  63091784  0E881AF40  0BC7955795      0  0  1  1    0  01     10   10
251    12    0F92B87  46122F09  1D1035E80  178F2AAF2B      1  0  1  1    0  10     01   10
252    13    1F2570F  0C245E12  1A206BD01  2F1E555E56      1  0  1  0    0  11     10   01
253    14    1E4AE1F  1848BC25  1440D7A03  5E3CAABCAC      1  0  0  0    0  00     11   10
254    15    1C95C3E  3091784A  0881AF407  3C79557958      1  1  1  0    1  11     00   11
255    16    192B87D  6122F094  11035E80F  78F2AAF2B1      1  0  0  1    1  01     11   00
256    17    12570FA  4245E128  0206BD01E  71E555E562      0  0  0  1    0  10     01   11
257    18    04AE1F4  048BC250  040D7A03D  63CAABCAC5      0  1  0  1    0  11     10   01
258    19    095C3E8  091784A0  081AF407A  479557958A      1  0  1  1    0  01     11   10
259    20    12B87D1  122F0941  1035E80F4  0F2AAF2B14      0  0  0  0    1  11     01   11
260    21    0570FA3  245E1283  006BD01E9  1E555E5628      0  0  0  0    1  01     11   01
261    22    0AE1F46  48BC2506  00D7A03D2  3CAABCAC50      1  1  0  1    0  01     01   11
262    23    15C3E8C  11784A0C  01AF407A5  79557958A0      0  0  0  0    1  10     01   01
263    24    0B87D18  22F09419  035E80F4A  72AAF2B140      1  1  0  1    1  11     10   01
264    25    170FA30  45E12832  06BD01E94  6555E56280      0  1  0  0    0  00     11   10
265    26    0E1F460  0BC25065  0D7A03D28  4AABCAC501      1  1  1  1    0  00     00   11
266    27    1C3E8C0  1784A0CB  1AF407A50  1557958A03      1  1  1  0    1  01     00   00
267    28    187D181  2F094196  15E80F4A0  2AAF2B1406      1  0  0  1    1  00     01   00
268    29    10FA302  5E12832C  0BD01E941  555E56280C      0  0  1  0    1  11     00   01
269    30    01F4604  3C250658  17A03D283  2ABCAC5019      0  0  0  1    0  01     11   00
270    31    03E8C09  784A0CB0  0F407A506  557958A033      0  0  1  0    0  10     01   11
271    32    07D1812  70941960  1E80F4A0C  2AF2B14066      0  1  1  1    1  11     10   01
272    33    0FA3024  612832C1  1D01E9419  55E56280CD      1  0  1  1    0  01     11   10
273    34    1F46049  42506583  1A03D2832  2BCAC5019A      1  0  1  1    0  01     01   11
274    35    1E8C093  04A0CB07  1407A5065  57958A0335      1  1  0  1    0  00     01   01
275    36    1D18127  0941960F  080F4A0CB  2F2B14066B      1  0  1  0    0  10     00   01
276    37    1A3024F  12832C1F  101E94196  5E56280CD7      1  1  0  0    0  00     10   00
277    38    146049F  2506583E  003D2832C  3CAC5019AE      0  0  0  1    1  01     00   10
278    39    08C093E  4A0CB07D  007A50658  7958A0335D      1  0  0  0    0  00     01   00
279    40    118127C  141960FA  00F4A0CB0  72B14066BA      0  0  0  1    1  11     00   01
280    41    03024F8  2832C1F4  01E941961  656280CD74      0  0  0  0    1  10     11   00
281    42    06049F1  506583E9  03D2832C2  4AC5019AE9      0  0  0  1    1  01     10   11
282    43    0C093E2  20CB07D2  07A506585  158A0335D3      1  1  0  1    0  10     01   10
283    44    18127C5  41960FA5  0F4A0CB0B  2B14066BA7      1  1  1  0    1  11     10   01
284    45    1024F8A  032C1F4B  1E9419616  56280CD74F      0  0  1  0    0  00     11   10
285    46    0049F15  06583E97  1D2832C2C  2C5019AE9F      0  0  1  0    1  10     00   11
```

Sample Data

286	47	0093E2B	0CB07D2F	1A5065859	58A0335D3E	0	1	1	1	1	00	10	00
287	48	0127C56	1960FA5E	14A0CB0B2	314066BA7D	0	0	0	0	0	01	00	10
288	49	024F8AD	32C1F4BC	094196164	6280CD74FB	0	1	1	1	0	11	01	00
289	50	049F15A	6583E978	12832C2C8	45019AE9F6	0	1	0	0	0	10	11	01
290	51	093E2B5	4B07D2F0	050658591	0A0335D3ED	1	0	0	0	1	01	10	11
291	52	127C56B	160FA5E0	0A0CB0B22	14066BA7DA	0	0	1	0	0	01	01	10
292	53	04F8AD7	2C1F4BC1	141961645	280CD74FB5	0	0	0	0	1	10	01	01
293	54	09F15AF	583E9783	0832C2C8A	5019AE9F6A	1	0	1	0	0	11	10	01
294	55	13E2B5E	307D2F06	106585915	20335D3ED5	0	0	0	0	1	11	11	10
295	56	07C56BD	60FA5E0D	00CB0B22B	4066BA7DAA	0	1	0	0	0	11	11	11
296	57	0F8AD7A	41F4BC1B	019616457	00CD74FB54	1	1	0	1	0	10	11	11
297	58	1F15AF4	03E97836	032C2C8AF	019AE9F6A9	1	1	0	1	1	10	10	11
298	59	1E2B5E9	07D2F06C	06585915E	0335D3ED52	1	1	0	0	0	01	10	10
299	60	1C56BD2	0FA5E0D8	0CB0B22BC	066BA7DAA4	1	1	1	0	0	10	01	10
300	61	18AD7A5	1F4BC1B0	196164578	0CD74FB549	1	0	1	1	1	11	10	01
301	62	115AF4B	3E978361	12C2C8AF0	19AE9F6A92	0	1	0	1	1	00	11	10
302	63	02B5E96	7D2F06C2	0585915E0	335D3ED524	0	0	0	0	0	10	00	11
303	64	056BD2D	7A5E0D85	0B0B22BC1	66BA7DAA49	0	0	1	1	0	00	10	00
304	65	0AD7A5B	74BC1B0A	161645783	4D74FB5493	1	1	0	0	0	00	00	10
305	66	15AF4B6	69783615	0C2C8AF07	1AE9F6A926	0	0	1	1	0	01	00	00
306	67	0B5E96D	52F06C2B	185915E0F	35D3ED524C	1	1	1	1	1	11	01	00
307	68	16BD2DB	25E0D857	10B22BC1F	6BA7DAA499	0	1	0	1	1	10	11	01
308	69	0D7A5B7	4BC1B0AF	01645783F	574FB54933	1	1	0	0	0	10	10	11
309	70	1AF4B6F	1783615F	02C8AF07F	2E9F6A9266	1	1	0	1	1	01	10	10
310	71	15E96DF	2F06C2BF	05915E0FF	5D3ED524CC	0	0	0	0	1	00	01	10
311	72	0BD2DBF	5E0D857F	0B22BC1FE	3A7DAA4998	1	0	1	0	0	10	00	01
312	73	17A5B7F	3C1B0AFE	1645783FD	74FB549331	0	0	0	1	1	11	10	00
313	74	0F4B6FF	783615FD	0C8AF07FA	69F6A92662	1	0	1	1	0	01	11	10
314	75	1E96DFF	706C2BFB	1915E0FF5	53ED524CC4	1	0	1	1	0	01	01	11
315	76	1D2DBFE	60D857F6	122BC1FEB	27DAA49988	1	1	0	1	0	00	01	01
316	77	1A5B7FD	41B0AFEC	045783FD7	4FB5493310	1	1	0	1	1	10	00	01
317	78	14B6FFA	03615FD8	08AF07FAE	1F6A926620	0	0	1	0	1	11	10	00
318	79	096DFF4	06C2BFB1	115E0FF5D	3ED524CC40	1	1	0	1	0	01	11	10
319	80	12DBFE8	0D857F63	02BC1FEBB	7DAA499881	0	1	0	1	1	10	01	11
320	81	05B7FD0	1B0AFEC6	05783FD77	7B54933103	0	0	0	0	0	00	10	01
321	82	0B6FFA1	3615FD8C	0AF07FAEF	76A9266206	1	0	1	1	1	00	00	10
322	83	16DFF42	6C2BFB18	15E0FF5DE	6D524CC40C	0	0	0	0	0	00	00	00
323	84	0DBFE85	5857F631	0BC1FEBBD	5AA4998819	1	0	1	1	1	01	00	00
324	85	1B7FD0B	30AFEC62	1783FD77A	3549331033	1	1	0	0	1	00	01	00
325	86	16FFA16	615FD8C5	0F07FAEF5	6A92662067	0	0	1	1	0	10	00	01
326	87	0DFF42D	42BFB18B	1E0FF5DEA	5524CC40CE	1	1	1	0	1	00	10	00
327	88	1BFE85B	057F6317	1C1FEBBD5	2A4998819C	1	0	1	0	0	00	00	10
328	89	17FD0B7	0AFEC62E	183FD77AA	5493310339	0	1	1	1	1	01	00	00
329	90	0FFA16F	15FD8C5C	107FAEF55	2926620672	1	1	0	0	1	00	01	00
330	91	1FF42DF	2BFB18B9	00FF5DEAA	524CC40CE5	1	1	0	0	0	10	00	01
331	92	1FE85BF	57F63172	01FEBBD55	24998819CA	1	1	0	1	1	00	10	00
332	93	1FD0B7F	2FEC62E4	03FD77AAA	4933103394	1	1	0	0	0	00	00	10
333	94	1FA16FF	5FD8C5C9	07FAEF555	1266206728	1	1	0	0	0	01	00	00
334	95	1F42DFF	3FB18B93	0FF5DEAAA	24CC40CE51	1	1	1	1	1	11	01	00
335	96	1E85BFF	7F631727	1FEBBD554	4998819CA3	1	0	1	1	0	11	11	01
336	97	1D0B7FE	7EC62E4F	1FD77AAA9	1331033947	1	1	1	0	0	10	11	11
337	98	1A16FFC	7D8C5C9F	1FAEF5553	266206728E	1	1	1	0	1	10	10	11
338	99	142DFF9	7B18B93F	1F5DEAAA7	4CC40CE51D	0	0	1	1	0	01	10	10
339	100	085BFF3	7631727F	1EBBD554E	198819CA3B	1	0	1	1	0	10	01	10
340	101	10B7FE6	6C62E4FF	1D77AAA9C	3310339477	0	0	1	0	1	00	10	01
341	102	016FFCC	58C5C9FE	1AEF55538	66206728EE	0	1	1	0	0	00	00	10
342	103	02DFF98	318B93FC	15DEAAA70	4C40CE51DC	0	1	0	0	1	00	00	00

Sample Data

343	104	05BFF31	631727F8	0BBD554E1	18819CA3B9	0	0	1	1	0	01	00	00
344	105	0B7FE62	462E4FF1	177AAA9C2	3103394772	1	0	0	0	0	00	01	00
345	106	16FFCC5	0C5C9FE2	0EF555384	6206728EE4	0	0	1	0	1	11	00	01
346	107	0DFF98A	18B93FC4	1DEAAA709	440CE51DC9	1	1	1	0	0	00	11	00
347	108	1BFF315	31727F88	1BD554E12	0819CA3B93	1	0	1	0	0	11	00	11
348	109	17FE62A	62E4FF11	17AAA9C24	1033947726	0	1	0	0	0	01	11	00
349	110	0FFCC54	45C9FE22	0F5553849	206728EE4C	1	1	1	0	0	01	01	11
350	111	1FF98A8	0B93FC44	1EAAA7093	40CE51DC99	1	1	1	1	1	00	01	01
351	112	1FF3150	1727F889	1D554E127	019CA3B933	1	0	1	1	1	10	00	01
352	113	1FE62A0	2E4FF112	1AAA9C24F	0339477267	1	0	1	0	0	00	10	00
353	114	1FCC541	5C9FE225	15553849E	06728EE4CF	1	1	0	0	0	00	00	10
354	115	1F98A82	393FC44B	0AAA7093C	0CE51DC99F	1	0	1	1	1	01	00	00
355	116	1F31504	727F8897	1554E1279	19CA3B933E	1	0	0	1	1	00	01	00
356	117	1E62A09	64FF112F	0AA9C24F2	339477267D	1	1	1	1	0	01	00	01
357	118	1CC5412	49FE225E	1553849E4	6728EE4CFB	1	1	0	0	1	00	01	00
358	119	198A824	13FC44BC	0AA7093C9	4E51DC99F7	1	1	1	0	1	10	00	01
359	120	1315049	27F88979	154E12792	1CA3B933EE	0	1	0	1	0	00	10	00
360	121	062A093	4FF112F3	0A9C24F24	39477267DC	0	1	1	0	0	00	00	10
361	122	0C54127	1FE225E6	153849E48	728EE4CFB8	1	1	0	1	1	01	00	00
362	123	18A824E	3FC44BCD	0A7093C91	651DC99F71	1	1	1	0	0	11	01	00
363	124	115049C	7F88979A	14E127922	4A3B933EE2	0	1	0	0	0	10	11	01
364	125	02A0938	7F112F35	09C24F244	1477267DC5	0	0	1	0	1	01	10	11

1.4 THIRD SET OF SAMPLES

```
Initial values for the key, pan address and clock

K'c3[0]   = FF   K'c3[1]   = FF    K'c3[2]   = FF    K'c3[3]  = FF
K'c3[4]   = FF   K'c3[5]   = FF    K'c3[6]   = FF    K'c3[7]  = FF
K'c3[8]   = FF   K'c3[9]   = FF    K'c3[10]  = FF    K'c3[11] = FF
K'c3[12]  = FF   K'c3[13]  = FF    K'c3[14]  = FF    K'c3[15] = FF

Addr3[0] = FF   Addr3[1] = FF    Addr3[2] = FF
Addr3[3] = FF   Addr3[4] = FF    Addr3[5] = FF

CL3[0]  = FF   CL3[1]  = FF    CL3[2]  = FF    CL3[3]  = 03


==========================================================================================
         Fill LFSRs with initial data
==========================================================================================
```

t	clk#	LFSR1	LFSR2	LFSR3	LFSR4	X1	X2	X3	X4	Z	C[t+1]	C[t]	C[t-1]
0	0	0000000*	00000000*	000000000*	0000000000*	0	0	0	0	0	00	00	00
1	1	0000001*	00000001*	000000001*	0000000001*	0	0	0	0	0	00	00	00
2	2	0000003*	00000002*	000000003*	0000000003*	0	0	0	0	0	00	00	00
3	3	0000007*	00000004*	000000007*	0000000007*	0	0	0	0	0	00	00	00
4	4	000000F*	00000009*	00000000F*	000000000F*	0	0	0	0	0	00	00	00
5	5	000001F*	00000013*	00000001F*	000000001F*	0	0	0	0	0	00	00	00
6	6	000003F*	00000027*	00000003F*	000000003F*	0	0	0	0	0	00	00	00
7	7	000007F*	0000004F*	00000007F*	000000007F*	0	0	0	0	0	00	00	00
8	8	00000FF*	0000009F*	0000000FF*	00000000FF*	0	0	0	0	0	00	00	00
9	9	00001FF*	0000013F*	0000001FF*	00000001FF*	0	0	0	0	0	00	00	00
10	10	00003FF*	0000027F*	0000003FF*	00000003FF*	0	0	0	0	0	00	00	00
11	11	00007FF*	000004FF*	0000007FF*	00000007FF*	0	0	0	0	0	00	00	00
12	12	0000FFF*	000009FF*	000000FFF*	0000000FFF*	0	0	0	0	0	00	00	00
13	13	0001FFF*	000013FF*	000001FFF*	0000001FFF*	0	0	0	0	0	00	00	00
14	14	0003FFF*	000027FF*	000003FFF*	0000003FFF*	0	0	0	0	0	00	00	00
15	15	0007FFF*	00004FFF*	000007FFF*	0000007FFF*	0	0	0	0	0	00	00	00
16	16	000FFFF*	00009FFF*	00000FFFF*	000000FFFF*	0	0	0	0	0	00	00	00
17	17	001FFFF*	00013FFF*	00001FFFF*	000001FFFF*	0	0	0	0	0	00	00	00
18	18	003FFFF*	00027FFF*	00003FFFF*	000003FFFF*	0	0	0	0	0	00	00	00
19	19	007FFFF*	0004FFFF*	00007FFFF*	000007FFFF*	0	0	0	0	0	00	00	00
20	20	00FFFFF*	0009FFFF*	0000FFFFF*	00000FFFFF*	0	0	0	0	0	00	00	00
21	21	01FFFFF*	0013FFFF*	0001FFFFF*	00001FFFFF*	0	0	0	0	0	00	00	00
22	22	03FFFFF*	0027FFFF*	0003FFFFF*	00003FFFFF*	0	0	0	0	0	00	00	00
23	23	07FFFFF*	004FFFFF*	0007FFFFF*	00007FFFFF*	0	0	0	0	0	00	00	00
24	24	0FFFFFF*	009FFFFF*	000FFFFFF*	0000FFFFFF*	1	1	0	0	0	01	00	00
25	25	1FFFFFF*	013FFFFF*	001FFFFFF*	0001FFFFFF*	1	0	0	0	1	00	00	00
26	26	1FFFFFF	027FFFFF*	003FFFFFF*	0003FFFFFF*	1	0	0	0	1	00	00	00
27	27	1FFFFFF	04FFFFFF*	007FFFFFF*	0007FFFFFF*	1	1	0	0	0	01	00	00
28	28	1FFFFFF	09FFFFFF*	00FFFFFFF*	000FFFFFFF*	1	1	0	0	0	01	00	00
29	29	1FFFFFF	13FFFFFF*	01FFFFFFF*	001FFFFFFF*	1	1	0	0	0	01	00	00
30	30	1FFFFFF	27FFFFFF*	03FFFFFFF*	003FFFFFFF*	1	1	0	0	0	01	00	00
31	31	1FFFFFF	4FFFFFFF*	07FFFFFFF*	007FFFFFFF*	1	1	0	0	0	01	00	00
32	32	1FFFFFF	1FFFFFFF	0FFFFFFFF*	00FFFFFFFF*	1	1	1	1	0	10	00	00
33	33	1FFFFFF	3FFFFFFE	1FFFFFFFF*	01FFFFFFFF*	1	1	1	1	0	10	00	00
34	34	1FFFFFF	7FFFFFFC	1FFFFFFFF	03FFFFFFFF*	1	1	1	1	0	10	00	00

Sample Data

35	35	1FFFFFF	7FFFFFF9	1FFFFFFFF	07FFFFFFFF*	1	1	1	1	0	10	00	00
36	36	1FFFFFF	7FFFFFF3	1FFFFFFFF	0FFFFFFFFF*	1	1	1	1	0	10	00	00
37	37	1FFFFFF	7FFFFFE7	1FFFFFFFF	1FFFFFFFFF*	1	1	1	1	0	10	00	00
38	38	1FFFFFF	7FFFFFCF	1FFFFFFFF	3FFFFFFFFF*	1	1	1	1	0	10	00	00
39	39	1FFFFFF	7FFFFF9F	1FFFFFFFF	7FFFFFFFFF*	1	1	1	1	0	10	00	00

==========

Start clocking Summation Combiner

==========

40	1	1FFFFFF	7FFFFF3F	1FFFFFFFF	7FFFFFFFFF	1	1	1	1	0	01	10	00
41	2	1FFFFFF	7FFFFE7F	1FFFFFFFF	7FFFFFFFFF	1	1	1	1	1	10	01	10
42	3	1FFFFFF	7FFFFCFF	1FFFFFFFF	7FFFFFFFFF	1	1	1	1	0	10	10	01
43	4	1FFFFFF	7FFFF9FF	1FFFFFFFF	7FFFFFFFFF	1	1	1	1	0	00	10	10
44	5	1FFFFFF	7FFFF3FF	1FFFFFFFF	7FFFFFFFFF	1	1	1	1	0	11	00	10
45	6	1FFFFFF	7FFFE7FE	1FFFFFFFF	7FFFFFFFFF	1	1	1	1	1	00	11	00
46	7	1FFFFFF	7FFFCFFC	1FFFFFFFF	7FFFFFFFFF	1	1	1	1	0	00	00	11
47	8	1FFFFFF	7FFF9FF9	1FFFFFFFF	7FFFFFFFFF	1	1	1	1	0	10	00	00
48	9	1FFFFFF	7FFF3FF3	1FFFFFFFF	7FFFFFFFFF	1	1	1	1	0	01	10	00
49	10	1FFFFFF	7FFE7FE6	1FFFFFFFF	7FFFFFFFFF	1	1	1	1	1	10	01	10
50	11	1FFFFFE	7FFCFFCC	1FFFFFFFE	7FFFFFFFFF	1	1	1	1	0	10	10	01
51	12	1FFFFFC	7FF9FF99	1FFFFFFFC	7FFFFFFFFF	1	1	1	1	0	00	10	10
52	13	1FFFFF8	7FF3FF33	1FFFFFFF8	7FFFFFFFFF	1	1	1	1	0	11	00	10
53	14	1FFFFF0	7FE7FE67	1FFFFFFF0	7FFFFFFFFF	1	1	1	1	1	00	11	00
54	15	1FFFFE0	7FCFFCCF	1FFFFFFE1	7FFFFFFFFF	1	1	1	1	0	00	00	11
55	16	1FFFFC0	7F9FF99F	1FFFFFFC3	7FFFFFFFFF	1	1	1	1	0	10	00	00
56	17	1FFFF80	7F3FF33E	1FFFFFF87	7FFFFFFFFE	1	0	1	1	1	00	10	00
57	18	1FFFF00	7E7FE67C	1FFFFFF0F	7FFFFFFFFC	1	0	1	1	1	00	00	10
58	19	1FFFE01	7CFFCCF8	1FFFFFE1E	7FFFFFFFF8	1	1	1	1	0	10	00	00
59	20	1FFFC03	79FF99F0	1FFFFFC3C	7FFFFFFFF0	1	1	1	1	0	01	10	00
60	21	1FFF807	73FF33E0	1FFFFF878	7FFFFFFFE1	1	1	1	1	1	10	01	10
61	22	1FFF00F	67FE67C0	1FFFFF0F0	7FFFFFFFC3	1	1	1	1	0	10	10	01
62	23	1FFE01E	4FFCCF80	1FFFFE1E1	7FFFFFFF87	1	1	1	1	0	00	10	10
63	24	1FFC03C	1FF99F00	1FFFFC3C3	7FFFFFFF0F	1	1	1	1	0	11	00	10
64	25	1FF8078	3FF33E01	1FFFF8787	7FFFFFFE1E	1	1	1	1	1	00	11	00
65	26	1FF00F0	7FE67C02	1FFFF0F0F	7FFFFFFC3C	1	1	1	1	0	00	00	11
66	27	1FE01E1	7FCCF805	1FFFE1E1E	7FFFFFF878	1	1	1	1	0	10	00	00
67	28	1FC03C3	7F99F00A	1FFFC3C3C	7FFFFFF0F0	1	1	1	1	0	01	10	00
68	29	1F80787	7F33E015	1FFF87878	7FFFFFE1E1	1	0	1	1	0	10	01	10
69	30	1F00F0F	7E67C02A	1FFF0F0F0	7FFFFFC3C3	1	0	1	1	1	11	10	01
70	31	1E01E1E	7CCF8054	1FFE1E1E1	7FFFFF8787	1	1	1	1	1	01	11	10
71	32	1C03C3C	799F00A9	1FFC3C3C3	7FFFFF0F0F	1	1	1	1	1	01	01	11
72	33	1807878	733E0152	1FF878787	7FFFFE1E1E	1	0	1	1	0	00	01	01
73	34	100F0F0	667C02A5	1FF0F0F0F	7FFFFC3C3C	0	0	1	1	0	10	00	01
74	35	001E1E0	4CF8054B	1FE1E1E1F	7FFFF87878	0	1	1	1	1	00	10	00
75	36	003C3C1	19F00A96	1FC3C3C3F	7FFFF0F0F0	0	1	1	1	1	00	00	10
76	37	0078783	33E0152C	1F878787F	7FFFE1E1E1	0	1	1	1	1	01	00	00
77	38	00F0F07	67C02A59	1F0F0F0FF	7FFFC3C3C3	0	1	1	1	0	11	01	00
78	39	01E1E0E	4F8054B3	1E1E1E1FF	7FFF878787	0	1	1	1	0	11	11	01
79	40	03C3C1C	1F00A966	1C3C3C3FF	7FFF0F0F0F	0	0	1	1	1	11	11	11
80	41	0787838	3E0152CC	1878787FF	7FFE1E1E1E	0	0	1	1	1	11	11	11
81	42	0F0F070	7C02A598	10F0F0FFF	7FFC3C3C3C	1	0	0	1	1	11	11	11
82	43	1E1E0E0	78054B30	01E1E1FFF	7FF8787878	1	0	0	1	1	11	11	11
83	44	1C3C1C0	700A9660	03C3C3FFE	7FF0F0F0F0	1	0	0	1	1	11	11	11
84	45	1878380	60152CC0	078787FFC	7FE1E1E1E0	1	0	0	1	1	11	11	11
85	46	10F0700	402A5980	0F0F0FFF8	7FC3C3C3C0	0	0	1	1	1	11	11	11
86	47	01E0E00	0054B300	1E1E1FFF0	7F87878780	0	0	1	1	1	11	11	11
87	48	03C1C00	00A96601	1C3C3FFE0	7F0F0F0F00	0	1	1	0	1	11	11	11
88	49	0783800	0152CC03	18787FFC0	7E1E1E1E01	0	0	1	0	0	11	11	11

Sample Data

89	50	0F07000	02A59806	10F0FFF80	7C3C3C3C03	1	1	0	0	1	11	11	11
90	51	1E0E000	054B300D	01E1FFF00	7878787807	1	0	0	0	0	11	11	11
91	52	1C1C001	0A96601A	03C3FFE01	70F0F0F00F	1	1	0	1	0	10	11	11
92	53	1838003	152CC035	0787FFC03	61E1E1E01E	1	0	0	1	0	10	10	11
93	54	1070007	2A59806B	0F0FFF807	43C3C3C03C	0	0	1	1	0	01	10	10
94	55	00E000F	54B300D7	1E1FFF00F	0787878078	0	1	1	1	0	10	01	10
95	56	01C001F	296601AE	1C3FFE01F	0F0F0F00F1	0	0	1	0	1	00	10	01
96	57	038003F	52CC035C	187FFC03F	1E1E1E01E2	0	1	1	0	0	00	00	10
97	58	070007F	259806B8	10FFF807F	3C3C3C03C4	0	1	0	0	1	00	00	00
98	59	0E000FE	4B300D71	01FFF00FE	7878780788	1	0	0	0	1	00	00	00
99	60	1C001FD	16601AE2	03FFE01FD	70F0F00F10	1	0	0	1	0	01	00	00
100	61	18003FA	2CC035C5	07FFC03FB	61E1E01E21	1	1	0	1	0	11	01	00
101	62	10007F4	59806B8B	0FFF807F7	43C3C03C43	0	1	1	1	0	11	11	01
102	63	0000FE8	3300D717	1FFF00FEE	0787807887	0	0	1	1	1	11	11	11
103	64	0001FD0	6601AE2F	1FFE01FDC	0F0F00F10E	0	0	1	0	0	11	11	11
104	65	0003FA0	4C035C5F	1FFC03FB8	1E1E01E21D	0	0	1	0	0	11	11	11
105	66	0007F40	1806B8BE	1FF807F70	3C3C03C43B	0	0	1	0	0	11	11	11
106	67	000FE81	300D717C	1FF00FEE1	7878078877	0	0	1	0	0	11	11	11
107	68	001FD02	601AE2F8	1FE01FDC2	70F00F10EF	0	0	1	1	1	11	11	11
108	69	003FA05	4035C5F0	1FC03FB84	61E01E21DE	0	0	1	1	1	11	11	11
109	70	007F40B	006B8BE0	1F807F708	43C03C43BC	0	0	1	1	1	11	11	11
110	71	00FE816	00D717C0	1F00FEE11	0780788778	0	1	1	1	0	10	11	11
111	72	01FD02C	01AE2F81	1E01FDC23	0F00F10EF1	0	1	1	0	0	10	10	11
112	73	03FA059	035C5F02	1C03FB847	1E01E21DE3	0	0	1	0	1	10	10	10
113	74	07F40B3	06B8BE05	1807F708F	3C03C43BC7	0	1	1	0	0	01	10	10
114	75	0FE8166	0D717C0B	100FEE11E	780788778F	1	0	0	0	0	01	01	10
115	76	1FD02CD	1AE2F817	001FDC23D	700F10EF1F	1	1	0	0	1	11	01	01
116	77	1FA059B	35C5F02F	003FB847A	601E21DE3F	1	1	0	0	1	10	11	01
117	78	1F40B37	6B8BE05E	007F708F4	403C43BC7F	1	1	0	0	0	10	10	11
118	79	1E8166E	5717C0BD	00FEE11E9	00788778FF	1	0	0	0	1	10	10	10
119	80	1D02CDC	2E2F817A	01FDC23D3	00F10EF1FE	1	0	0	1	0	01	10	10
120	81	1A059B9	5C5F02F5	03FB847A6	01E21DE3FD	1	0	0	1	1	01	01	10
121	82	140B373	38BE05EB	07F708F4C	03C43BC7FB	0	1	0	1	1	11	01	01
122	83	08166E7	717C0BD7	0FEE11E98	0788778FF7	1	0	1	1	0	11	11	01
123	84	102CDCF	62F817AE	1FDC23D31	0F10EF1FEF	0	1	1	0	1	11	11	11
124	85	0059B9F	45F02F5C	1FB847A63	1E21DE3FDE	0	1	1	0	1	11	11	11
125	86	00B373E	0BE05EB9	1F708F4C7	3C43BC7FBC	0	1	1	0	1	11	11	11
126	87	0166E7D	17C0BD72	1EE11E98F	788778FF78	0	1	1	1	0	10	11	11
127	88	02CDCFB	2F817AE5	1DC23D31F	710EF1FEF1	0	1	1	0	0	10	10	11
128	89	059B9F7	5F02F5CA	1B847A63F	621DE3FDE2	0	0	1	0	1	10	10	10
129	90	0B373EF	3E05EB94	1708F4C7F	443BC7FBC4	1	0	0	0	1	10	10	10
130	91	166E7DF	7C0BD728	0E11E98FF	08778FF788	0	0	1	0	1	10	10	10
131	92	0CDCFBE	7817AE50	1C23D31FF	10EF1FEF10	1	0	1	1	1	01	10	10
132	93	19B9F7D	702F5CA1	1847A63FE	21DE3FDE21	1	0	1	1	0	10	01	10
133	94	1373EFB	605EB942	108F4C7FC	43BC7FBC43	0	0	0	1	1	00	10	01
134	95	06E7DF7	40BD7285	011E98FF8	0778FF7886	0	1	0	0	1	01	00	10
135	96	0DCFBEF	017AE50A	023D31FF0	0EF1FEF10D	1	0	0	1	1	00	01	00
136	97	1B9F7DF	02F5CA15	047A63FE1	1DE3FDE21A	1	1	0	1	1	10	00	01
137	98	173EFBF	05EB942B	08F4C7FC3	3BC7FBC434	0	1	1	1	1	00	10	00
138	99	0E7DF7F	0BD72856	11E98FF87	778FF78869	1	1	0	1	1	00	00	10
139	100	1CFBEFF	17AE50AC	03D31FF0F	6F1FEF10D3	1	1	0	0	0	01	00	00
140	101	19F7DFE	2F5CA159	07A63FE1E	5E3FDE21A7	1	0	0	0	0	00	01	00
141	102	13EFBFC	5EB942B3	0F4C7FC3C	3C7FBC434F	0	1	1	0	0	10	00	01
142	103	07DF7F8	3D728566	1E98FF878	78FF78869F	0	0	1	1	0	00	10	00
143	104	0FBEFF0	7AE50ACD	1D31FF0F0	71FEF10D3E	1	1	1	1	0	11	00	10
144	105	1F7DFE1	75CA159B	1A63FE1E1	63FDE21A7D	1	1	1	1	1	00	11	00
145	106	1EFBFC3	6B942B36	14C7FC3C3	47FBC434FB	1	1	0	1	1	11	00	11

Sample Data

146	107	1DF7F86	5728566D	098FF8786	0FF78869F7	1	0	1	1	0	00	11	00
147	108	1BEFF0C	2E50ACDB	131FF0F0C	1FEF10D3EF	1	0	0	1	0	11	00	11
148	109	17DFE19	5CA159B6	063FE1E19	3FDE21A7DF	0	1	0	1	1	01	11	00
149	110	0FBFC33	3942B36D	0C7FC3C32	7FBC434FBF	1	0	1	1	0	01	01	11
150	111	1F7F866	728566DB	18FF87865	7F78869F7E	1	1	1	0	0	00	01	01
151	112	1EFF0CC	650ACDB6	11FF0F0CB	7EF10D3EFC	1	0	0	1	0	10	00	01
152	113	1DFE199	4A159B6D	03FE1E196	7DE21A7DF9	1	0	0	1	0	00	10	00
153	114	1BFC333	142B36DB	07FC3C32C	7BC434FBF3	1	0	0	1	0	00	00	10
154	115	17F8666	28566DB6	0FF878659	778869F7E6	0	0	1	1	0	01	00	00
155	116	0FF0CCC	50ACDB6D	1FF0F0CB3	6F10D3EFCC	1	1	1	0	0	11	01	00
156	117	1FE1999	2159B6DA	1FE1E1966	5E21A7DF99	1	0	1	0	1	10	11	01
157	118	1FC3332	42B36DB5	1FC3C32CC	3C434FBF33	1	1	1	0	1	10	10	11
158	119	1F86664	0566DB6B	1F8786599	78869F7E67	1	0	1	1	1	01	10	10
159	120	1F0CCC8	0ACDB6D6	1F0F0CB33	710D3EFCCE	1	1	1	0	0	10	01	10
160	121	1E19991	159B6DAC	1E1E19666	621A7DF99D	1	1	1	0	1	11	10	01
161	122	1C33323	2B36DB58	1C3C32CCC	4434FBF33B	1	0	1	0	1	00	11	10
162	123	1866647	566DB6B0	187865999	0869F7E676	1	0	1	0	0	11	00	11
163	124	10CCC8F	2CDB6D60	10F0CB333	10D3EFCCEC	0	1	0	1	1	01	11	00
164	125	019991E	59B6DAC0	01E196666	21A7DF99D9	0	1	0	1	1	10	01	11
165	126	033323C	336DB580	03C32CCCD	434FBF33B3	0	0	0	0	0	00	10	01
166	127	0666478	66DB6B01	07865999A	069F7E6766	0	1	0	1	0	00	00	10
167	128	0CCC8F0	4DB6D603	0F0CB3334	0D3EFCCECD	1	1	1	0	1	01	00	00
168	129	19991E1	1B6DAC07	1E1966669	1A7DF99D9B	1	0	1	0	1	00	01	00
169	130	13323C3	36DB580E	1C32CCCD3	34FBF33B37	0	1	1	1	1	10	00	01
170	131	0664786	6DB6B01C	1865999A7	69F7E6766F	0	1	1	1	1	00	10	00
171	132	0CC8F0D	5B6D6039	10CB3334F	53EFCCECDF	1	0	0	1	0	00	00	10
172	133	1991E1A	36DAC073	01966669E	27DF99D9BF	1	1	0	1	1	01	00	00
173	134	1323C35	6DB580E6	032CCCD3C	4FBF33B37E	0	1	0	1	1	00	01	00
174	135	064786A	5B6B01CD	065999A78	1F7E6766FC	0	0	0	0	0	11	00	01
175	136	0C8F0D5	36D6039B	0CB3334F0	3EFCCECDF9	1	1	1	1	1	00	11	00
176	137	191E1AA	6DAC0737	1966669E1	7DF99D9BF3	1	1	1	1	0	00	00	11
177	138	123C354	5B580E6E	12CCCD3C3	7BF33B37E7	0	0	0	1	1	00	00	00
178	139	04786A9	36B01CDC	05999A787	77E6766FCE	0	1	0	1	0	01	00	00
179	140	08F0D53	6D6039B8	0B3334F0E	6FCCECDF9C	1	0	1	1	0	11	01	00
180	141	11E1AA6	5AC07370	166669E1D	5F99D9BF38	0	1	0	1	1	10	11	01
181	142	03C354C	3580E6E0	0CCCD3C3A	3F33B37E70	0	1	1	0	0	10	10	11
182	143	0786A99	6B01CDC0	1999A7875	7E6766FCE1	0	0	1	0	1	10	10	10
183	144	0F0D533	56039B81	13334F0EB	7CCECDF9C2	1	0	0	1	0	01	10	10
184	145	1E1AA66	2C073703	06669E1D6	799D9BF385	1	0	0	1	1	01	01	10
185	146	1C354CC	580E6E06	0CCD3C3AC	733B37E70B	1	0	1	0	1	11	01	01
186	147	186A998	301CDC0C	199A78759	66766FCE17	1	0	1	0	1	10	11	01
187	148	10D5331	6039B818	1334F0EB2	4CECDF9C2F	0	0	0	1	1	01	10	11
188	149	01AA662	40737031	0669E1D65	19D9BF385E	0	0	0	1	0	01	01	10
189	150	0354CC5	00E6E063	0CD3C3ACB	33B37E70BD	0	1	1	1	0	00	01	01
190	151	06A998A	01CDC0C6	19A787596	6766FCE17B	0	1	1	0	0	10	00	01
191	152	0D53315	039B818C	134F0EB2C	4ECDF9C2F6	1	1	0	1	1	00	10	00
192	153	1AA662A	07370318	069E1D659	1D9BF385ED	1	0	0	1	0	00	00	10
193	154	154CC54	0E6E0630	0D3C3ACB3	3B37E70BDB	0	0	1	0	1	00	00	00
194	155	0A998A8	1CDC0C60	1A7875967	766FCE17B6	1	1	1	0	1	01	00	00
195	156	1533151	39B818C0	14F0EB2CE	6CDF9C2F6C	0	1	0	1	1	00	01	00
196	157	0A662A3	73703180	09E1D659D	59BF385ED8	1	0	1	1	1	10	00	01
197	158	14CC547	66E06301	13C3ACB3A	337E70BDB0	0	1	0	0	1	11	10	00
198	159	0998A8E	4DC0C602	078759675	66FCE17B61	1	1	0	1	0	01	11	10
199	160	133151D	1B818C05	0F0EB2CEB	4DF9C2F6C2	0	1	1	1	0	01	01	11
200	161	0662A3B	3703180B	1E1D659D6	1BF385ED85	0	0	1	1	1	11	01	01
201	162	0CC5477	6E063017	1C3ACB3AC	37E70BDB0B	1	0	1	1	0	11	11	01
202	163	198A8EF	5C0C602F	187596759	6FCE17B617	1	0	1	1	0	10	11	11

Sample Data

203	164	13151DE	3818C05F	10EB2CEB2	5F9C2F6C2F	0	0	0	1	1	01	10	11
204	165	062A3BC	703180BF	01D659D65	3F385ED85E	0	0	0	0	1	00	01	10
205	166	0C54779	6063017E	03ACB3ACB	7E70BDB0BD	1	0	0	0	1	11	00	01
206	167	18A8EF2	40C602FD	075967597	7CE17B617B	1	1	0	1	0	00	11	00
207	168	1151DE4	018C05FA	0EB2CEB2F	79C2F6C2F7	0	1	1	1	1	11	00	11
208	169	02A3BC9	03180BF5	1D659D65E	7385ED85EE	0	0	1	1	1	01	11	00
209	170	0547793	063017EB	1ACB3ACBC	670BDB0BDC	0	0	1	0	0	10	01	11
210	171	0A8EF27	0C602FD6	159675978	4E17B617B9	1	0	0	0	1	00	10	01
211	172	151DE4E	18C05FAD	0B2CEB2F1	1C2F6C2F73	0	1	1	0	0	00	00	10
212	173	0A3BC9C	3180BF5A	1659D65E3	385ED85EE6	1	1	0	0	0	01	00	00
213	174	1477938	63017EB5	0CB3ACBC6	70BDB0BDCC	0	0	1	1	1	00	01	00
214	175	08EF270	4602FD6A	19675978D	617B617B99	1	0	1	0	0	10	00	01
215	176	11DE4E1	0C05FAD5	12CEB2F1A	42F6C2F733	0	0	0	1	1	11	10	00
216	177	03BC9C3	180BF5AA	059D65E34	05ED85EE67	0	0	0	1	0	00	11	10
217	178	0779387	3017EB55	0B3ACBC68	0BDB0BDCCF	0	0	1	1	0	11	00	11
218	179	0EF270F	602FD6AA	1675978D0	17B617B99F	1	0	0	1	1	01	11	00
219	180	1DE4E1F	405FAD54	0CEB2F1A1	2F6C2F733F	1	0	1	0	1	10	01	11
220	181	1BC9C3F	00BF5AA9	19D65E342	5ED85EE67F	1	1	1	1	0	10	10	01
221	182	179387F	017EB552	13ACBC684	3DB0BDCCFE	0	0	0	1	1	10	10	10
222	183	0F270FF	02FD6AA5	075978D09	7B617B99FC	1	1	0	0	0	01	10	10
223	184	1E4E1FF	05FAD54A	0EB2F1A12	76C2F733F9	1	1	1	1	1	10	01	10
224	185	1C9C3FE	0BF5AA94	1D65E3425	6D85EE67F2	1	1	1	1	0	10	10	01
225	186	19387FD	17EB5529	1ACBC684B	5B0BDCCFE4	1	1	1	0	1	01	10	10
226	187	1270FFA	2FD6AA53	15978D096	3617B99FC9	0	1	0	0	0	01	01	10
227	188	04E1FF5	5FAD54A7	0B2F1A12C	6C2F733F93	0	1	1	0	1	11	01	01
228	189	09C3FEB	3F5AA94E	165E34258	585EE67F27	1	0	0	0	0	10	11	01
229	190	1387FD7	7EB5529C	0CBC684B1	30BDCCFE4F	0	1	1	1	1	10	10	11
230	191	070FFAE	7D6AA538	1978D0962	617B99FC9E	0	0	1	0	1	10	10	10
231	192	0E1FF5C	7AD54A70	12F1A12C4	42F733F93D	1	1	0	1	1	01	10	10
232	193	1C3FEB9	75AA94E1	05E342588	05EE67F27A	1	1	0	1	0	10	01	10
233	194	187FD73	6B5529C3	0BC684B10	0BDCCFE4F4	1	0	1	1	1	11	10	01
234	195	10FFAE6	56AA5386	178D09621	17B99FC9E8	0	1	0	1	1	00	11	10
235	196	01FF5CC	2D54A70C	0F1A12C43	2F733F93D0	0	0	1	0	1	10	00	11
236	197	03FEB98	5AA94E19	1E3425887	5EE67F27A1	0	1	1	1	1	00	10	00
237	198	07FD731	35529C33	1C684B10F	3DCCFE4F42	0	0	1	1	0	00	00	10
238	199	0FFAE63	6AA53866	18D09621F	7B99FC9E84	1	1	1	1	0	10	00	00
239	200	1FF5CC6	554A70CD	11A12C43F	7733F93D09	1	0	0	0	1	11	10	00

```
Z[0]  = 59
Z[1]  = 3B
Z[2]  = EF
Z[3]  = 07
Z[4]  = 13
Z[5]  = 70
Z[6]  = 9B
Z[7]  = B7
Z[8]  = 52
Z[9]  = 8F
Z[10] = 3E
Z[11] = B9
Z[12] = A5
Z[13] = AC
Z[14] = EA
Z[15] = 9E
```

```
==========================================================================================
         Reload this pattern into the LFSRs
         Hold content of Summation Combiner regs and calculate new C[t+1] and Z values
==========================================================================================
LFSR1  <= 1521359
LFSR2  <= 528F703B
LFSR3  <= 0AC3E9BEF
LFSR4  <= 4FEAB9B707
C[t+1] <= 00

==========================================================================================
         Generating 125 key symbols (encryption/decryption sequence)
==========================================================================================
240     1    1521359  528F703B  0AC3E9BEF  4FEAB9B707      0  1  1  1    1  00     10   00
241     2    0A426B3  251EE076  1587D37DE  1FD5736E0F      1  0  0  1    0  00     00   10
242     3    1484D67  4A3DC0ED  0B0FA6FBD  3FAAE6DC1E      0  0  1  1    0  01     00   00
243     4    0909ACF  147B81DA  161F4DF7A  7F55CDB83D      1  0  0  0    0  00     01   00
244     5    121359E  28F703B5  0C3E9BEF5  7EAB9B707B      0  1  1  1    1  10     00   01
245     6    0426B3C  51EE076B  187D37DEB  7D5736E0F6      0  1  1  0    0  00     10   00
246     7    084D679  23DC0ED6  10FA6FBD7  7AAE6DC1EC      1  1  0  1    1  00     00   10
247     8    109ACF2  47B81DAC  01F4DF7AF  755CDB83D8      0  1  0  0    1  00     00   00
248     9    01359E4  0F703B59  03E9BEF5E  6AB9B707B1      0  0  0  1    1  00     00   00
249    10    026B3C8  1EE076B3  07D37DEBD  55736E0F63      0  1  0  0    1  00     00   00
250    11    04D6791  3DC0ED67  0FA6FBD7A  2AE6DC1EC7      0  1  1  1    1  01     00   00
251    12    09ACF22  7B81DACF  1F4DF7AF4  55CDB83D8F      1  1  1  1    1  11     01   00
252    13    1359E44  7703B59E  1E9BEF5E8  2B9B707B1F      0  0  1  1    1  10     11   01
253    14    06B3C88  6E076B3C  1D37DEBD0  5736E0F63F      0  0  1  0    1  01     10   11
254    15    0D67911  5C0ED678  1A6FBD7A1  2E6DC1EC7E      1  0  1  0    1  01     01   10
255    16    1ACF223  381DACF0  14DF7AF42  5CDB83D8FD      1  0  0  1    1  11     01   01
256    17    159E446  703B59E0  09BEF5E85  39B707B1FA      0  0  1  1    1  10     11   01
257    18    0B3C88C  6076B3C0  137DEBD0A  736E0F63F4      1  0  0  0    1  01     10   11
258    19    1679118  40ED6780  06FBD7A15  66DC1EC7E8      0  1  0  1    1  01     01   10
259    20    0CF2231  01DACF00  0DF7AF42A  4DB83D8FD1      1  1  1  1    1  00     01   01
260    21    19E4463  03B59E01  1BEF5E854  1B707B1FA3      1  1  1  0    1  10     00   01
261    22    13C88C6  076B3C03  17DEBD0A9  36E0F63F47      0  0  0  1    1  11     10   00
262    23    079118C  0ED67807  0FBD7A152  6DC1EC7E8E      0  1  1  1    0  01     11   10
263    24    0F22318  1DACF00E  1F7AF42A4  5B83D8FD1D      1  1  1  1    1  01     01   11
264    25    1E44630  3B59E01C  1EF5E8548  3707B1FA3B      1  0  1  0    1  11     01   01
265    26    1C88C61  76B3C039  1DEBD0A91  6E0F63F477      1  1  1  0    0  11     11   01
266    27    19118C3  6D678073  1BD7A1523  5C1EC7E8EF      1  0  1  0    1  11     11   11
267    28    1223187  5ACF00E6  17AF42A46  383D8FD1DE      0  1  0  0    0  11     11   11
268    29    044630E  359E01CC  0F5E8548D  707B1FA3BD      0  1  1  0    1  11     11   11
269    30    088C61C  6B3C0399  1EBD0A91A  60F63F477B      1  0  1  1    0  10     11   11
270    31    1118C39  56780733  1D7A15234  41EC7E8EF6      0  0  1  1    0  10     10   11
271    32    0231872  2CF00E67  1AF42A468  03D8FD1DEC      0  1  1  1    1  01     10   10
272    33    04630E5  59E01CCE  15E8548D1  07B1FA3BD8      0  1  0  1    1  01     01   10
273    34    08C61CB  33C0399D  0BD0A91A3  0F63F477B1      1  1  1  0    0  00     01   01
274    35    118C396  6780733A  17A152347  1EC7E8EF63      0  1  0  1    0  10     00   01
275    36    031872D  4F00E674  0F42A468E  3D8FD1DEC7      0  0  1  1    0  00     10   00
276    37    0630E5A  1E01CCE8  1E8548D1D  7B1FA3BD8E      0  0  1  0    1  01     00   10
277    38    0C61CB5  3C0399D0  1D0A91A3B  763F477B1C      1  0  1  0    1  00     01   00
278    39    18C396A  780733A0  1A1523477  6C7E8EF639      1  0  1  0    0  10     00   01
279    40    11872D5  700E6741  142A468EF  58FD1DEC72      0  0  0  1    1  11     10   00
280    41    030E5AB  601CCE83  08548D1DF  31FA3BD8E5      0  0  1  1    1  00     11   10
281    42    061CB57  40399D07  10A91A3BF  63F477B1CB      0  0  0  1    1  10     00   11
282    43    0C396AF  00733A0F  01523477E  47E8EF6396      1  0  0  1    0  00     10   00
283    44    1872D5F  00E6741F  02A468EFD  0FD1DEC72C      1  1  0  1    1  00     00   10
```

Sample Data

284	45	10E5ABE	01CCE83F	0548D1DFA	1FA3BD8E58	0	1	0	1	0	01	00	00
285	46	01CB57C	0399D07F	0A91A3BF4	3F477B1CB0	0	1	1	0	1	00	01	00
286	47	0396AF9	0733A0FE	1523477E9	7E8EF63961	0	0	0	1	1	11	00	01
287	48	072D5F3	0E6741FD	0A468EFD2	7D1DEC72C3	0	0	1	0	0	01	11	00
288	49	0E5ABE7	1CCE83FA	148D1DFA4	7A3BD8E587	1	1	0	0	1	10	01	11
289	50	1CB57CE	399D07F4	091A3BF49	7477B1CB0F	1	1	1	0	1	11	10	01
290	51	196AF9D	733A0FE9	123477E92	68EF63961E	1	0	0	1	1	00	11	10
291	52	12D5F3B	66741FD2	0468EFD25	51DEC72C3C	0	0	0	1	1	10	00	11
292	53	05ABE77	4CE83FA4	08D1DFA4B	23BD8E5879	0	1	1	1	1	00	10	00
293	54	0B57CEE	19D07F49	11A3BF496	477B1CB0F2	1	1	0	0	0	00	00	10
294	55	16AF9DC	33A0FE92	03477E92C	0EF63961E4	0	1	0	1	0	01	00	00
295	56	0D5F3B8	6741FD25	068EFD259	1DEC72C3C9	1	0	0	1	1	00	01	00
296	57	1ABE771	4E83FA4B	0D1DFA4B3	3BD8E58793	1	1	1	1	0	01	00	01
297	58	157CEE2	1D07F496	1A3BF4967	77B1CB0F26	0	0	1	1	1	00	01	00
298	59	0AF9DC5	3A0FE92D	1477E92CE	6F63961E4D	1	0	0	0	1	11	00	01
299	60	15F3B8B	741FD25A	08EFD259C	5EC72C3C9B	0	0	1	1	1	01	11	00
300	61	0BE7716	683FA4B4	11DFA4B39	3D8E587937	1	0	0	1	1	10	01	11
301	62	17CEE2D	507F4968	03BF49672	7B1CB0F26E	0	0	0	0	0	00	10	01
302	63	0F9DC5B	20FE92D0	077E92CE4	763961E4DC	1	1	0	0	0	00	00	10
303	64	1F3B8B6	41FD25A0	0EFD259C9	6C72C3C9B9	1	1	1	0	1	01	00	00
304	65	1E7716D	03FA4B40	1DFA4B393	58E5879373	1	1	1	1	1	11	01	00
305	66	1CEE2DB	07F49680	1BF496727	31CB0F26E6	1	1	1	1	1	11	11	01
306	67	19DC5B7	0FE92D00	17E92CE4E	63961E4DCD	1	1	0	1	0	10	11	11
307	68	13B8B6F	1FD25A00	0FD259C9C	472C3C9B9A	0	1	1	0	0	10	10	11
308	69	07716DF	3FA4B400	1FA4B3938	0E58793735	0	1	1	0	0	01	10	10
309	70	0EE2DBF	7F496800	1F4967271	1CB0F26E6A	1	0	1	1	0	10	01	10
310	71	1DC5B7F	7E92D000	1E92CE4E2	3961E4DCD4	1	1	1	0	1	11	10	01
311	72	1B8B6FF	7D25A001	1D259C9C4	72C3C9B9A9	1	0	1	1	0	01	11	10
312	73	1716DFF	7A4B4002	1A4B39389	6587937352	0	0	1	1	1	10	01	11
313	74	0E2DBFF	74968005	149672713	4B0F26E6A5	1	1	0	0	0	11	10	01
314	75	1C5B7FE	692D000B	092CE4E26	161E4DCD4B	1	0	1	0	1	00	11	10
315	76	18B6FFC	525A0017	1259C9C4D	2C3C9B9A96	1	0	0	0	1	10	00	11
316	77	116DFF8	24B4002F	04B39389B	587937352C	0	1	0	0	1	11	10	00
317	78	02DBFF1	4968005F	096727136	30F26E6A58	0	0	1	1	1	00	11	10
318	79	05B7FE3	12D000BF	12CE4E26C	61E4DCD4B1	0	1	0	1	0	11	00	11
319	80	0B6FFC7	25A0017F	059C9C4D8	43C9B9A963	1	1	0	1	0	00	11	00
320	81	16DFF8E	4B4002FF	0B39389B1	07937352C6	0	0	1	1	0	11	00	11
321	82	0DBFF1C	168005FF	167271363	0F26E6A58C	1	1	0	0	1	01	11	00
322	83	1B7FE38	2D000BFF	0CE4E26C7	1E4DCD4B18	1	0	1	0	1	10	01	11
323	84	16FFC70	5A0017FF	19C9C4D8F	3C9B9A9631	0	0	1	1	0	11	10	01
324	85	0DFF8E1	34002FFF	139389B1E	7937352C62	1	0	0	0	0	00	11	10
325	86	1BFF1C3	68005FFF	07271363D	726E6A58C4	1	0	0	0	1	10	00	11
326	87	17FE387	5000BFFE	0E4E26C7B	64DCD4B188	0	0	1	1	0	00	10	00
327	88	0FFC70F	20017FFD	1C9C4D8F6	49B9A96311	1	0	1	1	1	00	00	10
328	89	1FF8E1F	4002FFFB	19389B1ED	137352C623	1	0	1	0	0	01	00	00
329	90	1FF1C3F	0005FFF7	1271363DB	26E6A58C46	1	0	0	1	1	00	01	00
330	91	1FE387F	000BFFEE	04E26C7B6	4DCD4B188C	1	0	0	1	0	10	00	01
331	92	1FC70FF	0017FFDC	09C4D8F6D	1B9A963118	1	0	1	1	1	00	10	00
332	93	1F8E1FF	002FFFB8	1389B1EDA	37352C6231	1	0	0	0	1	01	00	10
333	94	1F1C3FF	005FFF70	071363DB4	6E6A58C462	1	0	0	0	0	00	01	00
334	95	1E387FE	00BFFEE0	0E26C7B68	5CD4B188C5	1	1	1	1	0	01	00	01
335	96	1C70FFC	017FFDC1	1C4D8F6D1	39A963118A	1	0	1	1	0	11	01	00
336	97	18E1FF9	02FFFB82	189B1EDA2	7352C62315	1	1	1	0	0	11	11	01
337	98	11C3FF2	05FFF705	11363DB45	66A58C462B	0	1	0	1	1	11	11	11
338	99	0387FE4	0BFFEE0A	026C7B68B	4D4B188C56	0	1	0	0	0	11	11	11
339	100	070FFC9	17FFDC15	04D8F6D16	1A963118AD	0	1	0	1	1	11	11	11
340	101	0E1FF92	2FFFB82B	09B1EDA2C	352C62315A	1	1	1	0	0	10	11	11

Sample Data

341	102	1C3FF24	5FFF7057	1363DB458	6A58C462B4	1	1	0	0	0	10	10	11
342	103	187FE48	3FFEE0AE	06C7B68B0	54B188C569	1	1	0	1	1	01	10	10
343	104	10FFC90	7FFDC15C	0D8F6D161	2963118AD2	0	1	1	0	1	01	01	10
344	105	01FF920	7FFB82B9	1B1EDA2C2	52C62315A5	0	1	1	1	0	00	01	01
345	106	03FF240	7FF70573	163DB4584	258C462B4B	0	1	0	1	0	10	00	01
346	107	07FE481	7FEE0AE6	0C7B68B08	4B188C5696	0	1	1	0	0	00	10	00
347	108	0FFC902	7FDC15CD	18F6D1610	163118AD2D	1	1	1	0	1	00	00	10
348	109	1FF9204	7FB82B9A	11EDA2C20	2C62315A5B	1	1	0	0	0	01	00	00
349	110	1FF2408	7F705735	03DB45841	58C462B4B6	1	0	0	1	1	00	01	00
350	111	1FE4810	7EE0AE6B	07B68B082	3188C5696C	1	1	0	1	1	10	00	01
351	112	1FC9021	7DC15CD6	0F6D16105	63118AD2D8	1	1	1	0	1	00	10	00
352	113	1F92042	7B82B9AD	1EDA2C20B	462315A5B0	1	1	1	0	1	00	00	10
353	114	1F24084	7705735A	1DB458416	0C462B4B61	1	0	1	0	0	01	00	00
354	115	1E48108	6E0AE6B5	1B68B082C	188C5696C3	1	0	1	1	0	11	01	00
355	116	1C90211	5C15CD6A	16D161059	3118AD2D86	1	0	0	0	0	10	11	01
356	117	1920422	382B9AD5	0DA2C20B3	62315A5B0D	1	0	1	0	0	10	10	11
357	118	1240845	705735AA	1B4584167	4462B4B61A	0	0	1	0	1	10	10	10
358	119	048108A	60AE6B55	168B082CF	08C5696C34	0	1	0	1	0	01	10	10
359	120	0902114	415CD6AB	0D161059E	118AD2D869	1	0	1	1	0	10	01	10
360	121	1204228	02B9AD56	1A2C20B3D	2315A5B0D2	0	1	1	0	0	11	10	01
361	122	0408451	05735AAD	14584167B	462B4B61A4	0	0	0	0	1	11	11	10
362	123	08108A2	0AE6B55B	08B082CF7	0C5696C348	1	1	1	0	0	10	11	11
363	124	1021144	15CD6AB6	1161059EF	18AD2D8690	0	1	0	1	0	10	10	11
364	125	0042289	2B9AD56C	02C20B3DE	315A5B0D20	0	1	0	0	1	10	10	10

1.5 FOURTH SET OF SAMPLES

```
Initial values for the key, pan address and clock

K'c4[0]   = 21   K'c4[1]   = 87    K'c4[2]   = F0    K'c4[3]  = 4A
K'c4[4]   = BA   K'c4[5]   = 90    K'c4[6]   = 31    K'c4[7]  = D0
K'c4[8]   = 78   K'c4[9]   = 0D    K'c4[10]  = 4C    K'c4[11] = 53
K'c4[12]  = E0   K'c4[13]  = 15    K'c4[14]  = 3A    K'c4[15] = 63

Addr4[0] = 2C   Addr4[1] = 7F    Addr4[2] = 94
Addr4[3] = 56   Addr4[4] = 0F    Addr4[5] = 1B

CL4[0]  = 5F   CL4[1]  = 1A    CL4[2]  = 00    CL4[3]  = 02


==============================================================================================
         Fill LFSRs with initial data
==============================================================================================

  t  clk#    LFSR1    LFSR2     LFSR3      LFSR4           X1 X2 X3 X4   Z  C[t+1] C[t] C[t-1]

  0     0    0000000* 00000000* 000000000* 0000000000*     0  0  0  0    0  00      00   00
  1     1    0000000* 00000001* 000000001* 0000000001*     0  0  0  0    0  00      00   00
  2     2    0000001* 00000002* 000000002* 0000000003*     0  0  0  0    0  00      00   00
  3     3    0000002* 00000004* 000000004* 0000000007*     0  0  0  0    0  00      00   00
  4     4    0000004* 00000009* 000000008* 000000000F*     0  0  0  0    0  00      00   00
  5     5    0000008* 00000013* 000000010* 000000001E*     0  0  0  0    0  00      00   00
  6     6    0000010* 00000027* 000000021* 000000003D*     0  0  0  0    0  00      00   00
  7     7    0000021* 0000004F* 000000043* 000000007A*     0  0  0  0    0  00      00   00
  8     8    0000042* 0000009F* 000000087* 00000000F4*     0  0  0  0    0  00      00   00
  9     9    0000084* 0000013F* 00000010F* 00000001E9*     0  0  0  0    0  00      00   00
 10    10    0000108* 0000027F* 00000021F* 00000003D2*     0  0  0  0    0  00      00   00
 11    11    0000211* 000004FE* 00000043E* 00000007A5*     0  0  0  0    0  00      00   00
 12    12    0000422* 000009FC* 00000087C* 0000000F4A*     0  0  0  0    0  00      00   00
 13    13    0000845* 000013F8* 0000010F8* 0000001E94*     0  0  0  0    0  00      00   00
 14    14    000108B* 000027F0* 0000021F1* 0000003D29*     0  0  0  0    0  00      00   00
 15    15    0002117* 00004FE1* 0000043E3* 0000007A52*     0  0  0  0    0  00      00   00
 16    16    000422E* 00009FC2* 0000087C6* 000000F4A4*     0  0  0  0    0  00      00   00
 17    17    000845D* 00013F84* 000010F8C* 000001E948*     0  0  0  0    0  00      00   00
 18    18    00108BA* 00027F08* 000021F18* 000003D290*     0  0  0  0    0  00      00   00
 19    19    0021174* 0004FE10* 000043E30* 000007A520*     0  0  0  0    0  00      00   00
 20    20    00422E8* 0009FC21* 000087C61* 00000F4A41*     0  0  0  0    0  00      00   00
 21    21    00845D1* 0013F842* 00010F8C3* 00001E9482*     0  0  0  0    0  00      00   00
 22    22    0108BA3* 0027F084* 00021F186* 00003D2905*     0  0  0  0    0  00      00   00
 23    23    0211747* 004FE109* 00043E30C* 00007A520B*     0  0  0  0    0  00      00   00
 24    24    0422E8F* 009FC213* 00087C619* 0000F4A417*     0  1  0  0    1  00      00   00
 25    25    0845D1E* 013F8426* 0010F8C32* 0001E9482F*     1  0  0  0    1  00      00   00
 26    26    108BA3D  027F084D* 0021F1864* 0003D2905E*     0  0  0  0    0  00      00   00
 27    27    011747B  04FE109B* 0043E30C9* 0007A520BC*     0  1  0  0    1  00      00   00
 28    28    022E8F6  09FC2136* 0087C6192* 000F4A4179*     0  1  0  0    1  00      00   00
 29    29    045D1EC  13F8426C* 010F8C325* 001E9482F2*     0  1  0  0    1  00      00   00
 30    30    08BA3D9  27F084D8* 021F1864B* 003D2905E5*     1  1  0  0    0  01      00   00
 31    31    11747B3  4FE109B0* 043E30C97* 007A520BCA*     0  1  0  0    1  00      00   00
 32    32    02E8F67  1FC21360  087C6192E* 00F4A41795*     0  1  1  1    1  01      00   00
 33    33    05D1ECF  3F8426C1  10F8C325C* 01E9482F2B*     0  1  0  1    0  01      00   00
 34    34    0BA3D9F  7F084D82  01F1864B8  03D2905E56*     1  0  0  1    0  01      00   00
```

35	35	1747B3E	7E109B04	03E30C970	07A520BCAC*	0	0	0	1	1	00	00	00
36	36	0E8F67C	7C213608	07C6192E1	0F4A417958*	1	0	0	0	1	00	00	00
37	37	1D1ECF8	78426C11	0F8C325C3	1E9482F2B1*	1	0	1	1	1	01	00	00
38	38	1A3D9F0	7084D822	1F1864B86	3D2905E563*	1	1	1	0	1	01	00	00
39	39	147B3E1	6109B044	1E30C970C	7A520BCAC6*	0	0	1	0	1	00	00	00

==========

Start clocking Summation Combiner

==========

40	1	08F67C2	42136088	1C6192E18	74A417958D	1	0	1	1	1	01	00	00
41	2	11ECF84	0426C111	18C325C30	69482F2B1B	0	0	1	0	0	00	01	00
42	3	03D9F08	084D8222	11864B861	52905E5637	0	0	0	1	1	11	00	01
43	4	07B3E10	109B0444	030C970C3	2520BCAC6E	0	1	0	0	0	01	11	00
44	5	0F67C21	21360889	06192E186	4A417958DC	1	0	0	0	0	10	01	11
45	6	1ECF843	426C1112	0C325C30C	1482F2B1B8	1	0	1	1	1	11	10	01
46	7	1D9F086	04D82225	1864B8619	2905E56370	1	1	1	0	0	01	11	10
47	8	1B3E10D	09B0444B	10C970C32	520BCAC6E1	1	1	0	0	1	10	01	11
48	9	167C21B	13608897	0192E1865	2417958DC3	0	0	0	0	0	00	10	01
49	10	0CF8436	26C1112F	0325C30CB	482F2B1B87	1	1	0	0	0	00	00	10
50	11	19F086D	4D82225E	064B86197	105E56370F	1	1	0	0	0	01	00	00
51	12	13E10DB	1B0444BC	0C970C32F	20BCAC6E1F	0	0	1	1	1	00	01	00
52	13	07C21B7	36088979	192E1865E	417958DC3F	0	0	1	0	1	11	00	01
53	14	0F8436E	6C1112F2	125C30CBD	02F2B1B87F	1	0	0	1	1	01	11	00
54	15	1F086DD	582225E4	04B86197B	05E56370FF	1	0	0	1	1	10	01	11
55	16	1E10DBA	30444BC9	0970C32F7	0BCAC6E1FF	1	0	1	1	1	11	10	01
56	17	1C21B75	60889793	12E1865EE	17958DC3FF	1	1	0	1	0	01	11	10
57	18	18436EA	41112F27	05C30CBDD	2F2B1B87FF	1	0	0	0	0	10	01	11
58	19	1086DD4	02225E4E	0B86197BA	5E56370FFF	0	0	1	0	1	00	10	01
59	20	010DBA8	0444BC9D	170C32F74	3CAC6E1FFF	0	0	0	1	1	01	00	10
60	21	021B750	0889793A	0E1865EE8	7958DC3FFF	0	1	1	0	1	00	01	00
61	22	0436EA0	1112F274	1C30CBDD0	72B1B87FFE	0	0	1	1	0	10	00	01
62	23	086DD40	2225E4E9	186197BA1	656370FFFC	1	0	1	0	0	00	10	00
63	24	10DBA81	444BC9D3	10C32F743	4AC6E1FFF8	0	0	0	1	1	01	00	10
64	25	01B7502	089793A7	01865EE86	158DC3FFF1	0	1	0	1	1	00	01	00
65	26	036EA05	112F274E	030CBDD0D	2B1B87FFE3	0	0	0	0	0	11	00	01
66	27	06DD40B	225E4E9C	06197BA1A	56370FFFC6	0	0	0	0	1	10	11	00
67	28	0DBA817	44BC9D39	0C32F7434	2C6E1FFF8D	1	1	1	0	1	10	10	11
68	29	1B7502E	09793A72	1865EE868	58DC3FFF1B	1	0	1	1	1	01	10	10
69	30	16EA05D	12F274E5	10CBDD0D0	31B87FFE36	0	1	0	1	1	01	01	10
70	31	0DD40BA	25E4E9CB	0197BA1A1	6370FFFC6D	1	1	0	0	1	11	01	01
71	32	1BA8174	4BC9D397	032F74343	46E1FFF8DA	1	1	0	1	0	11	11	01
72	33	17502E8	1793A72F	065EE8687	0DC3FFF1B4	0	1	0	1	1	11	11	11
73	34	0EA05D0	2F274E5E	0CBDD0D0F	1B87FFE369	1	0	1	1	0	10	11	11
74	35	1D40BA0	5E4E9CBD	197BA1A1F	370FFFC6D2	1	0	1	0	0	10	10	11
75	36	1A81741	3C9D397B	12F74343F	6E1FFF8DA5	1	1	0	0	0	01	10	10
76	37	1502E82	793A72F6	05EE8687F	5C3FFF1B4B	0	0	0	0	1	00	01	10
77	38	0A05D05	7274E5ED	0BDD0D0FF	387FFE3696	1	0	1	0	0	10	00	01
78	39	140BA0B	64E9CBDA	17BA1A1FF	70FFFC6D2C	0	1	0	1	0	00	10	00
79	40	0817416	49D397B4	0F74343FE	61FFF8DA59	1	1	1	1	0	11	00	10
80	41	102E82C	13A72F69	1EE8687FD	43FFF1B4B3	0	1	1	1	0	00	11	00
81	42	005D058	274E5ED2	1DD0D0FFA	07FFE36966	0	0	1	1	0	11	00	11
82	43	00BA0B0	4E9CBDA5	1BA1A1FF5	0FFFC6D2CD	0	1	1	1	0	00	11	00
83	44	0174160	1D397B4A	174343FEA	1FFF8DA59B	0	0	0	1	1	10	00	11
84	45	02E82C0	3A72F695	0E8687FD4	3FFF1B4B37	0	0	1	1	0	00	10	00
85	46	05D0580	74E5ED2B	1D0D0FFA9	7FFE36966E	0	1	1	1	1	00	00	10
86	47	0BA0B00	69CBDA56	1A1A1FF53	7FFC6D2CDC	1	1	1	1	0	10	00	00
87	48	1741600	5397B4AC	14343FEA6	7FF8DA59B8	0	1	0	1	0	00	10	00
88	49	0E82C01	272F6959	08687FD4D	7FF1B4B370	1	0	1	1	1	00	00	10

Sample Data

89	50	1D05802	4E5ED2B3	10D0FFA9A	7FE36966E0	1	0	0	1	0	01	00	00
90	51	1A0B004	1CBDA566	01A1FF535	7FC6D2CDC0	1	1	0	1	0	11	01	00
91	52	1416009	397B4ACC	0343FEA6B	7F8DA59B80	0	0	0	1	0	10	11	01
92	53	082C013	72F69599	0687FD4D7	7F1B4B3701	1	1	0	0	0	10	10	11
93	54	1058026	65ED2B33	0D0FFA9AF	7E36966E03	0	1	1	0	0	01	10	10
94	55	00B004D	4BDA5667	1A1FF535E	7C6D2CDC06	0	1	1	0	1	01	01	10
95	56	016009B	17B4ACCE	143FEA6BD	78DA59B80D	0	1	0	1	1	11	01	01
96	57	02C0137	2F69599D	087FD4D7B	71B4B3701A	0	0	1	1	1	10	11	01
97	58	058026F	5ED2B33B	10FFA9AF6	636966E034	0	1	0	0	1	01	10	11
98	59	0B004DF	3DA56677	01FF535ED	46D2CDC068	1	1	0	1	0	10	01	10
99	60	16009BF	7B4ACCEF	03FEA6BDB	0DA59B80D0	0	0	0	1	1	00	10	01
100	61	0C0137F	769599DF	07FD4D7B7	1B4B3701A1	1	1	0	0	0	00	00	10
101	62	18026FE	6D2B33BE	0FFA9AF6E	36966E0342	1	0	1	1	1	01	00	00
102	63	1004DFC	5A56677D	1FF535EDD	6D2CDC0684	0	0	1	0	0	00	01	00
103	64	0009BF9	34ACCEFB	1FEA6BDBB	5A59B80D09	0	1	1	0	0	10	00	01
104	65	00137F2	69599DF7	1FD4D7B76	34B3701A12	0	0	1	1	0	00	10	00
105	66	0026FE5	52B33BEF	1FA9AF6EC	6966E03424	0	1	1	0	0	00	00	10
106	67	004DFCA	256677DF	1F535EDD8	52CDC06848	0	0	1	1	0	01	00	00
107	68	009BF94	4ACCEFBE	1EA6BDBB0	259B80D091	0	1	1	1	0	11	01	00
108	69	0137F29	1599DF7C	1D4D7B760	4B3701A123	0	1	1	0	1	10	11	01
109	70	026FE53	2B33BEF9	1A9AF6EC0	166E034246	0	0	1	0	1	01	10	11
110	71	04DFCA7	56677DF2	1535EDD81	2CDC06848D	0	0	0	1	0	01	01	10
111	72	09BF94F	2CCEFBE4	0A6BDBB03	59B80D091B	1	1	1	1	1	00	01	01
112	73	137F29E	599DF7C9	14D7B7607	33701A1236	0	1	0	0	1	11	00	01
113	74	06FE53C	333BEF93	09AF6EC0E	66E034246C	0	0	1	1	1	01	11	00
114	75	0DFCA79	6677DF26	135EDD81D	4DC06848D8	1	0	0	1	1	10	01	11
115	76	1BF94F2	4CEFBE4D	06BDBB03B	1B80D091B1	1	1	0	1	1	11	10	01
116	77	17F29E5	19DF7C9A	0D7B76077	3701A12363	0	1	1	0	1	00	11	10
117	78	0FE53CA	33BEF934	1AF6EC0EF	6E034246C6	1	1	1	0	1	11	00	11
118	79	1FCA794	677DF269	15EDD81DF	5C06848D8C	1	0	0	0	0	01	11	00
119	80	1F94F29	4EFBE4D2	0BDBB03BE	380D091B19	1	1	1	0	0	01	01	11
120	81	1F29E53	1DF7C9A5	17B76077D	701A123633	1	1	0	0	1	11	01	01
121	82	1E53CA6	3BEF934B	0F6EC0EFB	6034246C66	1	1	1	0	0	11	11	01
122	83	1CA794D	77DF2696	1EDD81DF6	406848D8CD	1	1	1	0	0	10	11	11
123	84	194F29B	6FBE4D2C	1DBB03BED	00D091B19B	1	1	1	1	0	11	10	11
124	85	129E536	5F7C9A59	1B76077DA	01A1236337	0	0	1	1	1	00	11	10
125	86	053CA6C	3EF934B3	16EC0EFB4	034246C66E	0	1	0	0	1	10	00	11
126	87	0A794D9	7DF26967	0DD81DF69	06848D8CDD	1	1	1	1	0	01	10	00
127	88	14F29B3	7BE4D2CF	1BB03BED3	0D091B19BB	0	1	1	0	1	01	01	10
128	89	09E5366	77C9A59F	176077DA6	1A12363377	1	1	0	0	1	11	01	01
129	90	13CA6CD	6F934B3F	0EC0EFB4D	34246C66EF	0	1	1	0	1	10	11	01
130	91	0794D9B	5F26967F	1D81DF69A	6848D8CDDF	0	0	1	0	1	01	10	11
131	92	0F29B37	3E4D2CFE	1B03BED35	5091B19BBE	1	0	1	1	0	10	01	10
132	93	1E5366F	7C9A59FD	16077DA6B	212363377C	1	1	0	0	0	11	10	01
133	94	1CA6CDF	7934B3FB	0C0EFB4D6	4246C66EF9	1	0	1	0	1	00	11	10
134	95	194D9BE	726967F6	181DF69AD	048D8CDDF2	1	0	1	1	1	11	00	11
135	96	129B37D	64D2CFED	103BED35B	091B19BBE5	0	1	0	0	0	01	11	00
136	97	05366FA	49A59FDA	0077DA6B7	12363377CA	0	1	0	0	0	10	01	11
137	98	0A6CDF5	134B3FB4	00EFB4D6E	246C66EF95	1	0	0	0	1	00	10	01
138	99	14D9BEA	26967F69	01DF69ADD	48D8CDDF2B	0	1	0	1	0	00	00	10
139	100	09B37D4	4D2CFED2	03BED35BB	11B19BBE56	1	0	0	1	0	01	00	00
140	101	1366FA8	1A59FDA5	077DA6B77	2363377CAC	0	0	0	0	1	01	01	00
141	102	06CDF51	34B3FB4A	0EFB4D6EF	46C66EF959	0	1	1	1	0	00	01	01
142	103	0D9BEA2	6967F695	1DF69ADDF	0D8CDDF2B2	1	0	1	1	1	10	00	01
143	104	1B37D45	52CFED2A	1BED35BBF	1B19BBE564	1	1	1	0	1	00	10	00
144	105	166FA8A	259FDA54	17DA6B77E	363377CAC8	0	1	0	0	1	01	00	10
145	106	0CDF515	4B3FB4A9	0FB4D6EFC	6C66EF9591	1	0	1	0	1	00	01	00

Sample Data

146	107	19BEA2B	167F6952	1F69ADDF8	58CDDF2B22	1	0	1	1	1	10	00	01
147	108	137D457	2CFED2A5	1ED35BBF1	319BBE5645	0	1	1	1	1	00	10	00
148	109	06FA8AF	59FDA54A	1DA6B77E2	63377CAC8B	0	1	1	0	0	00	00	10
149	110	0DF515F	33FB4A95	1B4D6EFC4	466EF95916	1	1	1	0	1	01	00	00
150	111	1BEA2BF	67F6952A	169ADDF88	0CDDF2B22C	1	1	0	1	0	11	01	00
151	112	17D457F	4FED2A55	0D35BBF10	19BBE56459	0	1	1	1	0	11	11	01
152	113	0FA8AFE	1FDA54AB	1A6B77E20	3377CAC8B3	1	1	1	0	0	10	11	11
153	114	1F515FD	3FB4A957	14D6EFC40	66EF959166	1	1	0	1	1	10	10	11
154	115	1EA2BFA	7F6952AF	09ADDF880	4DDF2B22CC	1	0	1	1	1	01	10	10
155	116	1D457F4	7ED2A55F	135BBF100	1BBE564598	1	1	0	1	0	10	01	10
156	117	1A8AFE8	7DA54ABF	06B77E200	377CAC8B31	1	1	0	0	0	11	10	01
157	118	1515FD0	7B4A957F	0D6EFC401	6EF9591663	0	0	1	1	1	00	11	10
158	119	0A2BFA1	76952AFE	1ADDF8803	5DF2B22CC7	1	1	1	1	0	00	00	11
159	120	1457F42	6D2A55FD	15BBF1007	3BE564598E	0	0	0	1	1	00	00	00
160	121	08AFE84	5A54ABFB	0B77E200F	77CAC8B31C	1	0	1	1	1	01	00	00
161	122	115FD09	34A957F7	16EFC401F	6F95916639	0	1	0	1	1	00	01	00
162	123	02BFA12	6952AFEF	0DDF8803E	5F2B22CC73	0	0	1	0	1	11	00	01
163	124	057F424	52A55FDF	1BBF1007D	3E564598E7	0	1	1	0	1	01	11	00
164	125	0AFE848	254ABFBF	177E200FA	7CAC8B31CF	1	0	0	1	1	10	01	11
165	126	15FD090	4A957F7E	0EFC401F5	795916639E	0	1	1	0	0	11	10	01
166	127	0BFA121	152AFEFD	1DF8803EA	72B22CC73C	1	0	1	1	0	01	11	10
167	128	17F4243	2A55FDFA	1BF1007D4	6564598E78	0	0	1	0	0	10	01	11
168	129	0FE8486	54ABFBF4	17E200FA8	4AC8B31CF0	1	1	0	1	1	11	10	01
169	130	1FD090C	2957F7E8	0FC401F51	15916639E1	1	0	1	1	0	01	11	10
170	131	1FA1219	52AFEFD1	1F8803EA3	2B22CC73C2	1	1	1	0	0	01	01	11
171	132	1F42432	255FDFA2	1F1007D47	564598E785	1	0	1	0	1	11	01	01
172	133	1E84865	4ABFBF44	1E200FA8F	2C8B31CF0B	1	1	1	1	1	11	11	01
173	134	1D090CB	157F7E88	1C401F51E	5916639E17	1	0	1	0	1	11	11	11
174	135	1A12196	2AFEFD11	18803EA3C	322CC73C2E	1	1	1	0	0	10	11	11
175	136	142432C	55FDFA23	11007D479	64598E785C	0	1	0	0	1	01	10	11
176	137	0848659	2BFBF446	0200FA8F2	48B31CF0B9	1	1	0	1	0	10	01	10
177	138	1090CB2	57F7E88C	0401F51E4	116639E173	0	1	0	0	1	00	10	01
178	139	0121964	2FEFD118	0803EA3C8	22CC73C2E6	0	1	1	1	1	00	00	10
179	140	02432C9	5FDFA230	1007D4791	4598E785CD	0	1	0	1	0	01	00	00
180	141	0486593	3FBF4461	000FA8F23	0B31CF0B9B	0	1	0	0	0	00	01	00
181	142	090CB26	7F7E88C3	001F51E47	16639E1736	1	0	0	0	1	11	00	01
182	143	121964D	7EFD1187	003EA3C8F	2CC73C2E6C	0	1	0	1	1	01	11	00
183	144	0432C9B	7DFA230E	007D4791E	598E785CD8	0	1	0	1	1	10	01	11
184	145	0865936	7BF4461C	00FA8F23C	331CF0B9B0	1	1	0	0	0	11	10	01
185	146	10CB26D	77E88C38	01F51E479	6639E17361	0	1	0	0	0	00	11	10
186	147	01964DA	6FD11870	03EA3C8F2	4C73C2E6C2	0	1	0	0	1	10	00	11
187	148	032C9B4	5FA230E1	07D4791E4	18E785CD84	0	1	0	1	0	00	10	00
188	149	0659368	3F4461C2	0FA8F23C9	31CF0B9B09	0	0	1	1	0	00	00	10
189	150	0CB26D0	7E88C384	1F51E4793	639E173612	1	1	1	1	0	10	00	00
190	151	1964DA0	7D118709	1EA3C8F27	473C2E6C24	1	0	1	0	0	00	10	00
191	152	12C9B41	7A230E12	1D4791E4E	0E785CD848	0	0	1	0	1	01	00	10
192	153	0593683	74461C24	1A8F23C9C	1CF0B9B091	0	0	1	1	1	00	01	00
193	154	0B26D06	688C3848	151E47938	39E1736123	1	1	0	1	1	10	00	01
194	155	164DA0D	51187091	0A3C8F271	73C2E6C247	0	0	1	1	0	00	10	00
195	156	0C9B41A	2230E123	14791E4E3	6785CD848F	1	0	0	1	0	00	00	10
196	157	1936835	4461C247	08F23C9C6	4F0B9B091E	1	0	1	0	0	01	00	00
197	158	126D06A	08C3848E	11E47938D	1E1736123C	0	1	0	0	0	00	01	00
198	159	04DA0D5	1187091C	03C8F271B	3C2E6C2478	0	1	0	0	1	11	00	01
199	160	09B41AA	230E1238	0791E4E37	785CD848F1	1	0	0	0	0	01	11	00
200	161	1368354	461C2470	0F23C9C6F	70B9B091E3	0	0	1	1	1	10	01	11
201	162	06D06A9	0C3848E1	1E47938DF	61736123C6	0	0	1	0	1	00	10	01
202	163	0DA0D52	187091C3	1C8F271BE	42E6C2478D	1	0	1	1	1	00	00	10

Sample Data

203	164	1B41AA4	30E12387	191E4E37C	05CD848F1A	1	1	1	1	0	10	00	00
204	165	1683549	61C2470F	123C9C6F9	0B9B091E34	0	1	0	1	0	00	10	00
205	166	0D06A92	43848E1E	047938DF3	1736123C68	1	1	0	0	0	00	00	10
206	167	1A0D524	07091C3C	08F271BE7	2E6C2478D1	1	0	1	0	0	01	00	00
207	168	141AA49	0E123879	11E4E37CF	5CD848F1A2	0	0	0	1	0	00	01	00
208	169	0835492	1C2470F3	03C9C6F9F	39B091E345	1	0	0	1	0	10	00	01
209	170	106A925	3848E1E6	07938DF3F	736123C68B	0	0	0	0	0	11	10	00
210	171	00D524A	7091C3CD	0F271BE7E	66C2478D16	0	1	1	1	0	01	11	10
211	172	01AA495	6123879B	1E4E37CFD	4D848F1A2D	0	0	1	1	1	10	01	11
212	173	035492A	42470F36	1C9C6F9FB	1B091E345B	0	0	1	0	1	00	10	01
213	174	06A9255	048E1E6C	1938DF3F6	36123C68B7	0	1	1	0	0	00	00	10
214	175	0D524AB	091C3CD8	1271BE7EC	6C2478D16E	1	0	0	0	1	00	00	00
215	176	1AA4957	123879B1	04E37CFD8	5848F1A2DD	1	0	0	0	1	00	00	00
216	177	15492AF	2470F363	09C6F9FB0	3091E345BA	0	0	1	1	0	01	00	00
217	178	0A9255E	48E1E6C7	138DF3F61	6123C68B75	1	1	0	0	1	00	01	00
218	179	1524ABD	11C3CD8F	071BE7EC3	42478D16EB	0	1	0	0	1	11	00	01
219	180	0A4957B	23879B1F	0E37CFD87	048F1A2DD6	1	1	1	1	1	00	11	00
220	181	1492AF6	470F363F	1C6F9FB0E	091E345BAD	0	0	1	0	1	10	00	11
221	182	09255EC	0E1E6C7F	18DF3F61D	123C68B75B	1	0	1	0	0	00	10	00
222	183	124ABD9	1C3CD8FF	11BE7EC3A	2478D16EB6	0	0	0	0	0	01	00	10
223	184	04957B3	3879B1FE	037CFD874	48F1A2DD6D	0	0	0	1	0	00	01	00
224	185	092AF66	70F363FD	06F9FB0E9	11E345BADB	1	1	0	1	1	10	00	01
225	186	1255ECD	61E6C7FA	0DF3F61D3	23C68B75B7	0	1	1	1	1	00	10	00
226	187	04ABD9B	43CD8FF5	1BE7EC3A7	478D16EB6E	0	1	1	1	1	00	00	10
227	188	0957B37	079B1FEA	17CFD874E	0F1A2DD6DD	1	1	0	0	0	01	00	00
228	189	12AF66F	0F363FD4	0F9FB0E9C	1E345BADBB	0	0	1	0	0	00	01	00
229	190	055ECDE	1E6C7FA9	1F3F61D39	3C68B75B76	0	0	1	0	1	11	00	01
230	191	0ABD9BC	3CD8FF53	1E7EC3A73	78D16EB6EC	1	1	1	1	1	00	11	00
231	192	157B379	79B1FEA7	1CFD874E6	71A2DD6DD9	0	1	1	1	1	11	00	11
232	193	0AF66F3	7363FD4E	19FB0E9CD	6345BADBB2	1	0	1	0	1	01	11	00
233	194	15ECDE6	66C7FA9D	13F61D39A	468B75B765	0	1	0	1	1	10	01	11
234	195	0BD9BCC	4D8FF53A	07EC3A735	0D16EB6ECA	1	1	0	0	0	11	10	01
235	196	17B3799	1B1FEA75	0FD874E6A	1A2DD6DD94	0	0	1	0	0	00	11	10
236	197	0F66F33	363FD4EA	1FB0E9CD5	345BADBB28	1	0	1	0	0	11	00	11
237	198	1ECDE67	6C7FA9D5	1F61D39AA	68B75B7650	1	0	1	1	0	00	11	00
238	199	1D9BCCF	58FF53AB	1EC3A7354	516EB6ECA0	1	1	1	0	1	11	00	11
239	200	1B3799E	31FEA756	1D874E6A8	22DD6DD940	1	1	1	1	1	00	11	00

```
Z[0]  = 3F
Z[1]  = B1
Z[2]  = 67
Z[3]  = D2
Z[4]  = 2F
Z[5]  = A6
Z[6]  = 1F
Z[7]  = B9
Z[8]  = E6
Z[9]  = 84
Z[10] = 43
Z[11] = 07
Z[12] = D8
Z[13] = 1E
Z[14] = E7
Z[15] = C3
```

```
==========================================================================================
         Reload this pattern into the LFSRs
         Hold content of Summation Combiner regs and calculate new C[t+1] and Z values
==========================================================================================
LFSR1  <= 0E62F3F
LFSR2  <= 6C84A6B1
LFSR3  <= 11E431F67
LFSR4  <= 61E707B9D2
C[t+1] <= 00

==========================================================================================
         Generating 125 key symbols (encryption/decryption sequence)
==========================================================================================
240     1    0E62F3F  6C84A6B1  11E431F67  61E707B9D2      1  1  0  1    0  00     11   00
241     2    1CC5E7F  59094D63  03C863ECE  43CE0F73A5      1  0  0  1    0  11     00   11
242     3    198BCFF  32129AC6  0790C7D9D  079C1EE74A      1  0  0  1    1  01     11   00
243     4    13179FE  6425358C  0F218FB3A  0F383DCE94      0  0  1  0    0  10     01   11
244     5    062F3FD  484A6B19  1E431F675  1E707B9D28      0  0  1  0    1  00     10   01
245     6    0C5E7FB  1094D632  1C863ECEB  3CE0F73A50      1  1  1  1    0  11     00   10
246     7    18BCFF7  2129AC64  190C7D9D7  79C1EE74A1      1  0  1  1    0  00     11   00
247     8    1179FEE  425358C8  1218FB3AE  7383DCE942      0  0  0  1    1  10     00   11
248     9    02F3FDD  04A6B190  0431F675D  6707B9D285      0  1  0  0    1  11     10   00
249    10    05E7FBB  094D6320  0863ECEBB  4E0F73A50B      0  0  1  0    0  00     11   10
250    11    0BCFF77  129AC640  10C7D9D77  1C1EE74A16      1  1  0  0    0  11     00   11
251    12    179FEEE  25358C80  018FB3AEE  383DCE942C      0  0  0  0    1  10     11   00
252    13    0F3FDDC  4A6B1900  031F675DD  707B9D2859      1  0  0  0    1  01     10   11
253    14    1E7FBB8  14D63200  063ECEBBA  60F73A50B3      1  1  0  1    0  10     01   10
254    15    1CFF771  29AC6401  0C7D9D774  41EE74A167      1  1  1  1    0  10     10   01
255    16    19FEEE2  5358C803  18FB3AEE9  03DCE942CE      1  0  1  1    1  01     10   10
256    17    13FDDC4  26B19007  11F675DD2  07B9D2859C      0  1  0  1    1  01     01   10
257    18    07FBB88  4D63200E  03ECEBBA4  0F73A50B38      0  0  0  0    1  10     01   01
258    19    0FF7711  1AC6401D  07D9D7748  1EE74A1670      1  1  0  1    1  11     10   01
259    20    1FEEE23  358C803B  0FB3AEE91  3DCE942CE1      1  1  1  1    1  01     11   10
260    21    1FDDC47  6B190076  1F675DD23  7B9D2859C2      1  0  1  1    0  01     01   11
261    22    1FBB88F  563200ED  1ECEBBA47  773A50B385      1  0  1  0    1  11     01   01
262    23    1F7711E  2C6401DB  1D9D7748F  6E74A1670A      1  0  1  0    1  10     11   01
263    24    1EEE23D  58C803B6  1B3AEE91E  5CE942CE15      1  1  1  1    0  11     10   11
264    25    1DDC47A  3190076C  1675DD23D  39D2859C2B      1  1  0  1    0  01     11   10
265    26    1BB88F4  63200ED9  0CEBBA47A  73A50B3856      1  0  1  1    0  01     01   11
266    27    17711E8  46401DB2  19D7748F5  674A1670AD      0  0  1  0    0  11     01   01
267    28    0EE23D0  0C803B64  13AEE91EA  4E942CE15B      1  1  0  1    0  11     11   01
268    29    1DC47A0  190076C8  075DD23D4  1D2859C2B7      1  0  0  0    0  11     11   11
269    30    1B88F41  3200ED90  0EBBA47A9  3A50B3856E      1  0  1  0    1  11     11   11
270    31    1711E83  6401DB20  1D7748F53  74A1670ADC      0  0  1  1    1  11     11   11
271    32    0E23D07  4803B641  1AEE91EA7  6942CE15B8      1  0  1  0    1  11     11   11
272    33    1C47A0F  10076C82  15DD23D4F  52859C2B71      1  0  0  1    1  11     11   11
273    34    188F41E  200ED905  0BBA47A9E  250B3856E3      1  0  1  0    1  11     11   11
274    35    111E83C  401DB20A  17748F53D  4A1670ADC7      0  0  0  0    1  00     11   11
275    36    023D078  003B6414  0EE91EA7A  142CE15B8E      0  0  1  0    1  10     00   11
276    37    047A0F0  0076C828  1DD23D4F5  2859C2B71C      0  0  1  0    1  11     10   00
277    38    08F41E1  00ED9050  1BA47A9EA  50B3856E39      1  1  1  1    1  01     11   10
278    39    11E83C2  01DB20A0  1748F53D5  21670ADC72      0  1  0  0    0  10     01   11
279    40    03D0785  03B64141  0E91EA7AA  42CE15B8E4      0  1  1  1    1  11     10   01
280    41    07A0F0A  076C8283  1D23D4F54  059C2B71C8      0  0  1  1    1  00     11   10
281    42    0F41E14  0ED90507  1A47A9EA9  0B3856E390      1  1  1  0    1  11     00   11
282    43    1E83C29  1DB20A0F  148F53D52  1670ADC720      1  1  0  0    1  01     11   00
283    44    1D07853  3B64141E  091EA7AA5  2CE15B8E40      1  0  1  1    0  01     01   11
```

Sample Data

284	45	1A0F0A6	76C8283C	123D4F54B	59C2B71C81	1	1	0	1	0	00	01	01
285	46	141E14C	6D905079	047A9EA97	33856E3902	0	1	0	1	0	10	00	01
286	47	083C299	5B20A0F2	08F53D52F	670ADC7204	1	0	1	0	0	00	10	00
287	48	1078533	364141E4	11EA7AA5E	4E15B8E408	0	0	0	0	0	01	00	10
288	49	00F0A67	6C8283C8	03D4F54BC	1C2B71C811	0	1	0	0	0	00	01	00
289	50	01E14CE	59050791	07A9EA978	3856E39022	0	0	0	0	0	11	00	01
290	51	03C299C	320A0F23	0F53D52F1	70ADC72045	0	0	1	1	1	01	11	00
291	52	0785339	64141E47	1EA7AA5E2	615B8E408A	0	0	1	0	0	10	01	11
292	53	0F0A673	48283C8E	1D4F54BC4	42B71C8115	1	0	1	1	1	11	10	01
293	54	1E14CE6	1050791C	1A9EA9788	056E39022B	1	0	1	0	1	00	11	10
294	55	1C299CD	20A0F239	153D52F10	0ADC720456	1	1	0	1	1	11	00	11
295	56	185339B	4141E472	0A7AA5E20	15B8E408AC	1	0	1	1	0	00	11	00
296	57	10A6736	0283C8E4	14F54BC41	2B71C81158	0	1	0	0	1	10	00	11
297	58	014CE6C	050791C9	09EA97882	56E39022B0	0	0	1	1	0	00	10	00
298	59	0299CD9	0A0F2393	13D52F104	2DC7204561	0	0	0	1	1	01	00	10
299	60	05339B3	141E4726	07AA5E208	5B8E408AC3	0	0	0	1	0	00	01	00
300	61	0A67366	283C8E4C	0F54BC411	371C811587	1	0	1	0	0	10	00	01
301	62	14CE6CC	50791C98	1EA978822	6E39022B0F	0	0	1	0	1	11	10	00
302	63	099CD99	20F23930	1D52F1045	5C7204561E	1	1	1	0	0	01	11	10
303	64	1339B33	41E47260	1AA5E208B	38E408AC3D	0	1	1	1	0	01	01	11
304	65	0673666	03C8E4C0	154BC4117	71C811587A	0	1	0	1	1	11	01	01
305	66	0CE6CCC	0791C980	0A978822E	639022B0F5	1	1	1	1	1	11	11	01
306	67	19CD999	0F239301	152F1045C	47204561EB	1	0	0	0	0	11	11	11
307	68	139B332	1E472603	0A5E208B9	0E408AC3D6	0	0	1	0	0	11	11	11
308	69	0736664	3C8E4C06	14BC41172	1C811587AD	0	1	0	1	1	11	11	11
309	70	0E6CCC8	791C980C	0978822E5	39022B0F5A	1	0	1	0	1	11	11	11
310	71	1CD9990	72393019	12F1045CB	7204561EB4	1	0	0	0	0	11	11	11
311	72	19B3320	64726033	05E208B97	6408AC3D69	1	0	0	0	0	11	11	11
312	73	1366640	48E4C067	0BC41172F	4811587AD3	0	1	1	0	1	11	11	11
313	74	06CCC81	11C980CF	178822E5E	1022B0F5A6	0	1	0	0	0	11	11	11
314	75	0D99903	2393019E	0F1045CBC	204561EB4C	1	1	1	0	0	10	11	11
315	76	1B33206	4726033D	1E208B979	408AC3D699	1	0	1	1	1	10	10	11
316	77	166640D	0E4C067B	1C41172F2	011587AD33	0	0	1	0	1	10	10	10
317	78	0CCC81B	1C980CF6	18822E5E5	022B0F5A66	1	1	1	0	1	01	10	10
318	79	1999036	393019EC	11045CBCA	04561EB4CD	1	0	0	0	0	01	01	10
319	80	133206C	726033D9	0208B9794	08AC3D699B	0	0	0	1	0	11	01	01
320	81	06640D9	64C067B3	041172F29	11587AD337	0	1	0	0	0	10	11	01
321	82	0CC81B3	4980CF66	0822E5E53	22B0F5A66F	1	1	1	1	0	11	10	11
322	83	1990366	13019ECC	1045CBCA6	4561EB4CDF	1	0	0	0	0	00	11	10
323	84	13206CC	26033D98	008B9794D	0AC3D699BE	0	0	0	1	1	10	00	11
324	85	0640D98	4C067B31	01172F29B	1587AD337C	0	0	0	1	1	11	10	00
325	86	0C81B30	180CF662	022E5E537	2B0F5A66F9	1	0	0	0	0	00	11	10
326	87	1903660	3019ECC5	045CBCA6F	561EB4CDF3	1	0	0	0	1	10	00	11
327	88	1206CC1	6033D98A	08B9794DE	2C3D699BE6	0	0	1	0	1	11	10	00
328	89	040D983	4067B315	1172F29BD	587AD337CC	0	0	0	0	1	11	11	10
329	90	081B306	00CF662A	02E5E537A	30F5A66F98	1	1	0	1	0	10	11	11
330	91	103660C	019ECC55	05CBCA6F4	61EB4CDF31	0	1	0	1	0	10	10	11
331	92	006CC19	033D98AB	0B9794DE8	43D699BE62	0	0	1	1	0	01	10	10
332	93	00D9833	067B3156	172F29BD0	07AD337CC5	0	0	0	1	0	01	01	10
333	94	01B3066	0CF662AC	0E5E537A0	0F5A66F98B	0	1	1	0	1	11	01	01
334	95	03660CD	19ECC559	1CBCA6F41	1EB4CDF317	0	1	1	1	0	11	11	01
335	96	06CC19B	33D98AB2	19794DE83	3D699BE62F	0	1	1	0	1	11	11	11
336	97	0D98336	67B31565	12F29BD06	7AD337CC5F	1	1	0	1	0	10	11	11
337	98	1B3066D	4F662ACA	05E537A0C	75A66F98BF	1	0	0	1	0	10	10	11
338	99	1660CDB	1ECC5594	0BCA6F418	6B4CDF317E	0	1	1	0	0	01	10	10
339	100	0CC19B7	3D98AB29	1794DE831	5699BE62FC	1	1	0	1	0	10	01	10
340	101	198336F	7B315653	0F29BD062	2D337CC5F9	1	0	1	0	0	11	10	01

Sample Data

341	102	13066DE	7662ACA7	1E537A0C5	5A66F98BF2	0	0	1	0	0	00	11	10
342	103	060CDBC	6CC5594F	1CA6F418B	34CDF317E4	0	1	1	1	1	11	00	11
343	104	0C19B78	598AB29F	194DE8317	699BE62FC9	1	1	1	1	1	00	11	00
344	105	18336F1	3315653F	129BD062E	5337CC5F92	1	0	0	0	1	10	00	11
345	106	1066DE2	662ACA7E	0537A0C5C	266F98BF25	0	0	0	0	0	11	10	00
346	107	00CDBC5	4C5594FD	0A6F418B9	4CDF317E4B	0	0	1	1	1	00	11	10
347	108	019B78B	18AB29FA	14DE83172	19BE62FC96	0	1	0	1	0	11	00	11
348	109	0336F16	315653F4	09BD062E5	337CC5F92C	0	0	1	0	0	01	11	00
349	110	066DE2D	62ACA7E8	137A0C5CA	66F98BF258	0	1	0	1	1	10	01	11
350	111	0CDBC5B	45594FD1	06F418B95	4DF317E4B1	1	0	0	1	0	11	10	01
351	112	19B78B6	0AB29FA2	0DE83172B	1BE62FC962	1	1	1	1	1	01	11	10
352	113	136F16C	15653F45	1BD062E57	37CC5F92C5	0	0	1	1	1	10	01	11
353	114	06DE2D9	2ACA7E8B	17A0C5CAE	6F98BF258B	0	1	0	1	0	11	10	01
354	115	0DBC5B2	5594FD16	0F418B95D	5F317E4B16	1	1	1	0	0	01	11	10
355	116	1B78B64	2B29FA2C	1E83172BB	3E62FC962C	1	0	1	0	1	10	01	11
356	117	16F16C8	5653F458	1D062E577	7CC5F92C58	0	0	1	1	0	11	10	01
357	118	0DE2D91	2CA7E8B0	1A0C5CAEF	798BF258B1	1	1	1	1	1	01	11	10
358	119	1BC5B23	594FD161	1418B95DF	7317E4B163	1	0	0	0	0	10	01	11
359	120	178B647	329FA2C2	083172BBF	662FC962C7	0	1	1	0	0	11	10	01
360	121	0F16C8E	653F4584	1062E577F	4C5F92C58E	1	0	0	0	0	00	11	10
361	122	1E2D91C	4A7E8B09	00C5CAEFE	18BF258B1C	1	0	0	1	0	11	00	11
362	123	1C5B238	14FD1613	018B95DFC	317E4B1639	1	1	0	0	1	01	11	00
363	124	18B6471	29FA2C27	03172BBF9	62FC962C72	1	1	0	1	0	01	01	11
364	125	116C8E2	53F4584E	062E577F3	45F92C58E4	0	1	0	1	1	11	01	01

2 FREQUENCY HOPPING SAMPLE DATA

The section contains three sets of sample data showing the basic and adapted hopping schemes for different combinations of addresses and initial clock values.

2.1 FIRST SET

```
Hop sequence {k} for PAGE SCAN/INQUIRY SCAN SUBSTATE:
CLKN start:      0x0000000
UAP / LAP:       0x00000000
#ticks:          0000 | 1000 | 2000 | 3000 | 4000 | 5000 | 6000 | 7000 |
                 -------------------------------------------------------
0x0000000:          0 |    2 |    4 |    6 |    8 |   10 |   12 |   14 |
0x0008000:         16 |   18 |   20 |   22 |   24 |   26 |   28 |   30 |
0x0010000:         32 |   34 |   36 |   38 |   40 |   42 |   44 |   46 |
0x0018000:         48 |   50 |   52 |   54 |   56 |   58 |   60 |   62 |
0x0020000:          0 |    2 |    4 |    6 |    8 |   10 |   12 |   14 |
0x0028000:         16 |   18 |   20 |   22 |   24 |   26 |   28 |   30 |
0x0030000:         32 |   34 |   36 |   38 |   40 |   42 |   44 |   46 |
0x0038000:         48 |   50 |   52 |   54 |   56 |   58 |   60 |   62 |

Hop sequence {k} for PAGE STATE/INQUIRY SUBSTATE:
CLKE start:      0x0000000
UAP / LAP:       0x00000000
#ticks:          00 01 02 03 | 04 05 06 07 | 08 09 0a 0b | 0c 0d 0e 0f |
                 -------------------------------------------------------
0x0000000:       48 50 09 13 | 52 54 41 45 | 56 58 11 15 | 60 62 43 47 |
0x0000010:       00 02 64 68 | 04 06 17 21 | 08 10 66 70 | 12 14 19 23 |
0x0000020:       48 50 09 13 | 52 54 41 45 | 56 58 11 15 | 60 62 43 47 |
0x0000030:       00 02 64 68 | 04 06 17 21 | 08 10 66 70 | 12 14 19 23 |
...
0x0001000:       48 18 09 05 | 20 22 33 37 | 24 26 03 07 | 28 30 35 39 |
0x0001010:       32 34 72 76 | 36 38 25 29 | 40 42 74 78 | 44 46 27 31 |
0x0001020:       48 18 09 05 | 20 22 33 37 | 24 26 03 07 | 28 30 35 39 |
0x0001030:       32 34 72 76 | 36 38 25 29 | 40 42 74 78 | 44 46 27 31 |
...
0x0002000:       16 18 01 05 | 52 54 41 45 | 56 58 11 15 | 60 62 43 47 |
0x0002010:       00 02 64 68 | 04 06 17 21 | 08 10 66 70 | 12 14 19 23 |
0x0002020:       16 18 01 05 | 52 54 41 45 | 56 58 11 15 | 60 62 43 47 |
0x0002030:       00 02 64 68 | 04 06 17 21 | 08 10 66 70 | 12 14 19 23 |
...
0x0003000:       48 50 09 13 | 52 22 41 37 | 24 26 03 07 | 28 30 35 39 |
0x0003010:       32 34 72 76 | 36 38 25 29 | 40 42 74 78 | 44 46 27 31 |
0x0003020:       48 50 09 13 | 52 22 41 37 | 24 26 03 07 | 28 30 35 39 |
0x0003030:       32 34 72 76 | 36 38 25 29 | 40 42 74 78 | 44 46 27 31 |

Hop sequence {k} for SLAVE PAGE RESPONSE SUBSTATE:
CLKN* =          0x0000010
UAP / LAP:       0x00000000
#ticks:          00 | 02 04 | 06 08 | 0a 0c | 0e 10 | 12 14 | 16 18 | 1a 1c | 1e
                 ---------------------------------------------------------------
0x0000012:       64 | 02 68 | 04 17 | 06 21 | 08 66 | 10 70 | 12 19 | 14 23 | 16
0x0000032:       01 | 18 05 | 20 33 | 22 37 | 24 03 | 26 07 | 28 35 | 30 39 | 32
0x0000052:       72 | 34 76 | 36 25 | 38 29 | 40 74 | 42 78 | 44 27 | 46 31 | 48
0x0000072:       09 | 50 13 | 52 41 | 54 45 | 56 11 | 58 15 | 60 43 | 62 47 | 00

Hop sequence {k} for MASTER PAGE RESPONSE SUBSTATE:
Offset value:    24
CLKE* =          0x0000012
UAP / LAP:       0x00000000
#ticks:          00 02 | 04 06 | 08 0a | 0c 0e | 10 12 | 14 16 | 18 1a | 1c 1e |
                 ---------------------------------------------------------------
0x0000014:       02 68 | 04 17 | 06 21 | 08 66 | 10 70 | 12 19 | 14 23 | 16 01 |
0x0000034:       18 05 | 20 33 | 22 37 | 24 03 | 26 07 | 28 35 | 30 39 | 32 72 |
0x0000054:       34 76 | 36 25 | 38 29 | 40 74 | 42 78 | 44 27 | 46 31 | 48 09 |
0x0000074:       50 13 | 52 41 | 54 45 | 56 11 | 58 15 | 60 43 | 62 47 | 00 64 |
```

Hop sequence {k} for CONNECTION STATE (Basic channel hopping sequence; ie, non-AFH):
CLK start: 0x0000010
UAP/LAP: 0x00000000

#ticks:	00 02	04 06	08 0a	0c 0e	10 12	14 16	18 1a	1c 1e
0x0000010:	08 66	10 70	12 19	14 23	16 01	18 05	20 33	22 37
0x0000030:	24 03	26 07	28 35	30 39	32 72	34 76	36 25	38 29
0x0000050:	40 74	42 78	44 27	46 31	48 09	50 13	52 41	54 45
0x0000070:	56 11	58 15	60 43	62 47	32 17	36 19	34 49	38 51
0x0000090:	40 21	44 23	42 53	46 55	48 33	52 35	50 65	54 67
0x00000b0:	56 37	60 39	58 69	62 71	64 25	68 27	66 57	70 59
0x00000d0:	72 29	76 31	74 61	78 63	01 41	05 43	03 73	07 75
0x00000f0:	09 45	13 47	11 77	15 00	64 49	66 53	68 02	70 06
0x0000110:	01 51	03 55	05 04	07 08	72 57	74 61	76 10	78 14
0x0000130:	09 59	11 63	13 12	15 16	17 65	19 69	21 18	23 22
0x0000150:	33 67	35 71	37 20	39 24	25 73	27 77	29 26	31 30
0x0000170:	41 75	43 00	45 28	47 32	17 02	21 04	19 34	23 36
0x0000190:	33 06	37 08	35 38	39 40	25 10	29 12	27 42	31 44
0x00001b0:	41 14	45 16	43 46	47 48	49 18	53 20	51 50	55 52
0x00001d0:	65 22	69 24	67 54	71 56	57 26	61 28	59 58	63 60
0x00001f0:	73 30	77 32	75 62	00 64	49 34	51 42	57 66	59 74
0x0000210:	53 36	55 44	61 68	63 76	65 50	67 58	73 03	75 11
0x0000230:	69 52	71 60	77 05	00 13	02 38	04 46	10 70	12 78
0x0000250:	06 40	08 48	14 72	16 01	18 54	20 62	26 07	28 15
0x0000270:	22 56	24 64	30 09	32 17	02 66	06 74	10 19	14 27
0x0000290:	04 70	08 78	12 23	16 31	18 03	22 11	26 35	30 43
0x00002b0:	20 07	24 15	28 39	32 47	34 68	38 76	42 21	46 29
0x00002d0:	36 72	40 01	44 25	48 33	50 05	54 13	58 37	62 45
0x00002f0:	52 09	56 17	60 41	64 49	34 19	36 35	50 51	52 67
0x0000310:	38 21	40 37	54 53	56 69	42 27	44 43	58 59	60 75
0x0000330:	46 29	48 45	62 61	64 77	66 23	68 39	03 55	05 71
0x0000350:	70 25	72 41	07 57	09 73	74 31	76 47	11 63	13 00
0x0000370:	78 33	01 49	15 65	17 02	66 51	70 67	03 04	07 20
0x0000390:	68 55	72 71	05 08	09 24	74 59	78 75	11 12	15 28
0x00003b0:	76 63	01 00	13 16	17 32	19 53	23 69	35 06	39 22
0x00003d0:	21 57	25 73	37 10	41 26	27 61	31 77	43 14	47 30
0x00003f0:	29 65	33 02	45 18	49 34	19 04	21 08	23 20	25 24

Sample Data

```
Hop Sequence {k} for CONNECTION STATE (Adapted channel hopping sequence with
all channel used; ie, AFH(79)):
CLK start:     0x0000010
ULAP:          0x00000000
Used Channels:0x7fffffffffffffffffff
#ticks:        00 02 | 04 06 | 08 0a | 0c 0e | 10 12 | 14 16 | 18 1a | 1c 1e |
               ---------------------------------------------------------------
0x0000010      08 08 | 10 10 | 12 12 | 14 14 | 16 16 | 18 18 | 20 20 | 22 22 |
0x0000030      24 24 | 26 26 | 28 28 | 30 30 | 32 32 | 34 34 | 36 36 | 38 38 |
0x0000050      40 40 | 42 42 | 44 44 | 46 46 | 48 48 | 50 50 | 52 52 | 54 54 |
0x0000070      56 56 | 58 58 | 60 60 | 62 62 | 32 32 | 36 36 | 34 34 | 38 38 |
0x0000090      40 40 | 44 44 | 42 42 | 46 46 | 48 48 | 52 52 | 50 50 | 54 54 |
0x00000b0      56 56 | 60 60 | 58 58 | 62 62 | 64 64 | 68 68 | 66 66 | 70 70 |
0x00000d0      72 72 | 76 76 | 74 74 | 78 78 | 01 01 | 05 05 | 03 03 | 07 07 |
0x00000f0      09 09 | 13 13 | 11 11 | 15 15 | 64 64 | 66 66 | 68 68 | 70 70 |
0x0000110      01 01 | 03 03 | 05 05 | 07 07 | 72 72 | 74 74 | 76 76 | 78 78 |
0x0000130      09 09 | 11 11 | 13 13 | 15 15 | 17 17 | 19 19 | 21 21 | 23 23 |
0x0000150      33 33 | 35 35 | 37 37 | 39 39 | 25 25 | 27 27 | 29 29 | 31 31 |
0x0000170      41 41 | 43 43 | 45 45 | 47 47 | 17 17 | 21 21 | 19 19 | 23 23 |
0x0000190      33 33 | 37 37 | 35 35 | 39 39 | 25 25 | 29 29 | 27 27 | 31 31 |
0x00001b0      41 41 | 45 45 | 43 43 | 47 47 | 49 49 | 53 53 | 51 51 | 55 55 |
0x00001d0      65 65 | 69 69 | 67 67 | 71 71 | 57 57 | 61 61 | 59 59 | 63 63 |
0x00001f0      73 73 | 77 77 | 75 75 | 00 00 | 49 49 | 51 51 | 57 57 | 59 59 |
0x0000210      53 53 | 55 55 | 61 61 | 63 63 | 65 65 | 67 67 | 73 73 | 75 75 |
0x0000230      69 69 | 71 71 | 77 77 | 00 00 | 02 02 | 04 04 | 10 10 | 12 12 |
0x0000250      06 06 | 08 08 | 14 14 | 16 16 | 18 18 | 20 20 | 26 26 | 28 28 |
0x0000270      22 22 | 24 24 | 30 30 | 32 32 | 02 02 | 06 06 | 10 10 | 14 14 |
0x0000290      04 04 | 08 08 | 12 12 | 16 16 | 18 18 | 22 22 | 26 26 | 30 30 |
0x00002b0      20 20 | 24 24 | 28 28 | 32 32 | 34 34 | 38 38 | 42 42 | 46 46 |
0x00002d0      36 36 | 40 40 | 44 44 | 48 48 | 50 50 | 54 54 | 58 58 | 62 62 |
0x00002f0      52 52 | 56 56 | 60 60 | 64 64 | 34 34 | 36 36 | 50 50 | 52 52 |
0x0000310      38 38 | 40 40 | 54 54 | 56 56 | 42 42 | 44 44 | 58 58 | 60 60 |
0x0000330      46 46 | 48 48 | 62 62 | 64 64 | 66 66 | 68 68 | 03 03 | 05 05 |
0x0000350      70 70 | 72 72 | 07 07 | 09 09 | 74 74 | 76 76 | 11 11 | 13 13 |
0x0000370      78 78 | 01 01 | 15 15 | 17 17 | 66 66 | 70 70 | 03 03 | 07 07 |
0x0000390      68 68 | 72 72 | 05 05 | 09 09 | 74 74 | 78 78 | 11 11 | 15 15 |
0x00003b0      76 76 | 01 01 | 13 13 | 17 17 | 19 19 | 23 23 | 35 35 | 39 39 |
0x00003d0      21 21 | 25 25 | 37 37 | 41 41 | 27 27 | 31 31 | 43 43 | 47 47 |
0x00003f0      29 29 | 33 33 | 45 45 | 49 49 | 19 19 | 21 21 | 23 23 | 25 25 |
```

Sample Data

```
Hop Sequence {k} for CONNECTION STATE (Adapted channel hopping sequence with
channels 0 to 21 unused):
CLK start:     0x0000010
ULAP:          0x00000000
Used Channels:0x7fffffffffffffc00000
#ticks:        00 02 | 04 06 | 08 0a | 0c 0e | 10 12 | 14 16 | 18 1a | 1c 1e |
               ---------------------------------------------------------------
0x0000010      30 30 | 32 32 | 34 34 | 36 36 | 38 38 | 40 40 | 42 42 | 22 22 |
0x0000030      24 24 | 26 26 | 28 28 | 30 30 | 32 32 | 34 34 | 36 36 | 38 38 |
0x0000050      40 40 | 42 42 | 44 44 | 46 46 | 48 48 | 50 50 | 52 52 | 54 54 |
0x0000070      56 56 | 58 58 | 60 60 | 62 62 | 32 32 | 36 36 | 34 34 | 38 38 |
0x0000090      40 40 | 44 44 | 42 42 | 46 46 | 48 48 | 52 52 | 50 50 | 54 54 |
0x00000b0      56 56 | 60 60 | 58 58 | 62 62 | 64 64 | 68 68 | 66 66 | 70 70 |
0x00000d0      72 72 | 76 76 | 74 74 | 78 78 | 45 45 | 49 49 | 47 47 | 51 51 |
0x00000f0      53 53 | 57 57 | 55 55 | 59 59 | 64 64 | 66 66 | 68 68 | 70 70 |
0x0000110      45 45 | 47 47 | 49 49 | 51 51 | 72 72 | 74 74 | 76 76 | 78 78 |
0x0000130      53 53 | 55 55 | 57 57 | 59 59 | 61 61 | 63 63 | 65 65 | 23 23 |
0x0000150      33 33 | 35 35 | 37 37 | 39 39 | 25 25 | 27 27 | 29 29 | 31 31 |
0x0000170      41 41 | 43 43 | 45 45 | 47 47 | 61 61 | 65 65 | 63 63 | 23 23 |
0x0000190      33 33 | 37 37 | 35 35 | 39 39 | 25 25 | 29 29 | 27 27 | 31 31 |
0x00001b0      41 41 | 45 45 | 43 43 | 47 47 | 49 49 | 53 53 | 51 51 | 55 55 |
0x00001d0      65 65 | 69 69 | 67 67 | 71 71 | 57 57 | 61 61 | 59 59 | 63 63 |
0x00001f0      73 73 | 77 77 | 75 75 | 66 66 | 49 49 | 51 51 | 57 57 | 59 59 |
0x0000210      53 53 | 55 55 | 61 61 | 63 63 | 65 65 | 67 67 | 73 73 | 75 75 |
0x0000230      69 69 | 71 71 | 77 77 | 66 66 | 68 68 | 70 70 | 76 76 | 78 78 |
0x0000250      72 72 | 74 74 | 23 23 | 25 25 | 27 27 | 29 29 | 26 26 | 28 28 |
0x0000270      22 22 | 24 24 | 30 30 | 32 32 | 68 68 | 72 72 | 76 76 | 23 23 |
0x0000290      70 70 | 74 74 | 78 78 | 25 25 | 27 27 | 22 22 | 26 26 | 30 30 |
0x00002b0      29 29 | 24 24 | 28 28 | 32 32 | 34 34 | 38 38 | 42 42 | 46 46 |
0x00002d0      36 36 | 40 40 | 44 44 | 48 48 | 50 50 | 54 54 | 58 58 | 62 62 |
0x00002f0      52 52 | 56 56 | 60 60 | 64 64 | 34 34 | 36 36 | 50 50 | 52 52 |
0x0000310      38 38 | 40 40 | 54 54 | 56 56 | 42 42 | 44 44 | 58 58 | 60 60 |
0x0000330      46 46 | 48 48 | 62 62 | 64 64 | 66 66 | 68 68 | 34 34 | 36 36 |
0x0000350      70 70 | 72 72 | 38 38 | 40 40 | 74 74 | 76 76 | 42 42 | 44 44 |
0x0000370      78 78 | 32 32 | 46 46 | 48 48 | 66 66 | 70 70 | 34 34 | 38 38 |
0x0000390      68 68 | 72 72 | 36 36 | 40 40 | 74 74 | 78 78 | 42 42 | 46 46 |
0x00003b0      76 76 | 32 32 | 44 44 | 48 48 | 50 50 | 23 23 | 35 35 | 39 39 |
0x00003d0      52 52 | 25 25 | 37 37 | 41 41 | 27 27 | 31 31 | 43 43 | 47 47 |
0x00003f0      29 29 | 33 33 | 45 45 | 49 49 | 50 50 | 52 52 | 23 23 | 25 25 |
```

Sample Data

```
Hop Sequence {k} for CONNECTION STATE (Adapted channel hopping sequence with
even channels used):
CLK start:     0x0000010
ULAP:          0x00000000
Used Channels:0x55555555555555555555
#ticks:        00 02 | 04 06 | 08 0a | 0c 0e | 10 12 | 14 16 | 18 1a | 1c 1e |
               ---------------------------------------------------------------
0x0000010      08 08 | 10 10 | 12 12 | 14 14 | 16 16 | 18 18 | 20 20 | 22 22 |
0x0000030      24 24 | 26 26 | 28 28 | 30 30 | 32 32 | 34 34 | 36 36 | 38 38 |
0x0000050      40 40 | 42 42 | 44 44 | 46 46 | 48 48 | 50 50 | 52 52 | 54 54 |
0x0000070      56 56 | 58 58 | 60 60 | 62 62 | 32 32 | 36 36 | 34 34 | 38 38 |
0x0000090      40 40 | 44 44 | 42 42 | 46 46 | 48 48 | 52 52 | 50 50 | 54 54 |
0x00000b0      56 56 | 60 60 | 58 58 | 62 62 | 64 64 | 68 68 | 66 66 | 70 70 |
0x00000d0      72 72 | 76 76 | 74 74 | 78 78 | 00 00 | 04 04 | 02 02 | 06 06 |
0x00000f0      08 08 | 12 12 | 10 10 | 14 14 | 64 64 | 66 66 | 68 68 | 70 70 |
0x0000110      00 00 | 02 02 | 04 04 | 06 06 | 72 72 | 74 74 | 76 76 | 78 78 |
0x0000130      08 08 | 10 10 | 12 12 | 14 14 | 16 16 | 18 18 | 20 20 | 22 22 |
0x0000150      32 32 | 34 34 | 36 36 | 38 38 | 24 24 | 26 26 | 28 28 | 30 30 |
0x0000170      40 40 | 42 42 | 44 44 | 46 46 | 16 16 | 20 20 | 18 18 | 22 22 |
0x0000190      32 32 | 36 36 | 34 34 | 38 38 | 24 24 | 28 28 | 26 26 | 30 30 |
0x00001b0      40 40 | 44 44 | 42 42 | 46 46 | 48 48 | 52 52 | 50 50 | 54 54 |
0x00001d0      64 64 | 68 68 | 66 66 | 70 70 | 56 56 | 60 60 | 58 58 | 62 62 |
0x00001f0      72 72 | 76 76 | 74 74 | 00 00 | 48 48 | 50 50 | 56 56 | 58 58 |
0x0000210      52 52 | 54 54 | 60 60 | 62 62 | 64 64 | 66 66 | 72 72 | 74 74 |
0x0000230      68 68 | 70 70 | 76 76 | 00 00 | 02 02 | 04 04 | 10 10 | 12 12 |
0x0000250      06 06 | 08 08 | 14 14 | 16 16 | 18 18 | 20 20 | 26 26 | 28 28 |
0x0000270      22 22 | 24 24 | 30 30 | 32 32 | 02 02 | 06 06 | 10 10 | 14 14 |
0x0000290      04 04 | 08 08 | 12 12 | 16 16 | 18 18 | 22 22 | 26 26 | 30 30 |
0x00002b0      20 20 | 24 24 | 28 28 | 32 32 | 34 34 | 38 38 | 42 42 | 46 46 |
0x00002d0      36 36 | 40 40 | 44 44 | 48 48 | 50 50 | 54 54 | 58 58 | 62 62 |
0x00002f0      52 52 | 56 56 | 60 60 | 64 64 | 34 34 | 36 36 | 50 50 | 52 52 |
0x0000310      38 38 | 40 40 | 54 54 | 56 56 | 42 42 | 44 44 | 58 58 | 60 60 |
0x0000330      46 46 | 48 48 | 62 62 | 64 64 | 66 66 | 68 68 | 00 00 | 02 02 |
0x0000350      70 70 | 72 72 | 04 04 | 06 06 | 74 74 | 76 76 | 08 08 | 10 10 |
0x0000370      78 78 | 78 78 | 12 12 | 14 14 | 66 66 | 70 70 | 00 00 | 04 04 |
0x0000390      68 68 | 72 72 | 02 02 | 06 06 | 74 74 | 78 78 | 08 08 | 12 12 |
0x00003b0      76 76 | 78 78 | 10 10 | 14 14 | 16 16 | 20 20 | 32 32 | 36 36 |
0x00003d0      18 18 | 22 22 | 34 34 | 38 38 | 24 24 | 28 28 | 40 40 | 44 44 |
0x00003f0      26 26 | 30 30 | 42 42 | 46 46 | 16 16 | 18 18 | 20 20 | 22 22 |
```

Sample Data

```
Hop Sequence {k} for CONNECTION STATE (Adapted channel hopping sequence with
odd channels used):
CLK start:     0x0000010
ULAP:          0x00000000
Used Channels:0x2aaaaaaaaaaaaaaaaaa
#ticks:        00 02 | 04 06 | 08 0a | 0c 0e | 10 12 | 14 16 | 18 1a | 1c 1e |
               ---------------------------------------------------------------
0x0000010      09 09 | 11 11 | 13 13 | 15 15 | 17 17 | 19 19 | 21 21 | 23 23 |
0x0000030      25 25 | 27 27 | 29 29 | 31 31 | 33 33 | 35 35 | 37 37 | 39 39 |
0x0000050      41 41 | 43 43 | 45 45 | 47 47 | 49 49 | 51 51 | 53 53 | 55 55 |
0x0000070      57 57 | 59 59 | 61 61 | 63 63 | 33 33 | 37 37 | 35 35 | 39 39 |
0x0000090      41 41 | 45 45 | 43 43 | 47 47 | 49 49 | 53 53 | 51 51 | 55 55 |
0x00000b0      57 57 | 61 61 | 59 59 | 63 63 | 65 65 | 69 69 | 67 67 | 71 71 |
0x00000d0      73 73 | 77 77 | 75 75 | 01 01 | 01 01 | 05 05 | 03 03 | 07 07 |
0x00000f0      09 09 | 13 13 | 11 11 | 15 15 | 65 65 | 67 67 | 69 69 | 71 71 |
0x0000110      01 01 | 03 03 | 05 05 | 07 07 | 73 73 | 75 75 | 77 77 | 01 01 |
0x0000130      09 09 | 11 11 | 13 13 | 15 15 | 17 17 | 19 19 | 21 21 | 23 23 |
0x0000150      33 33 | 35 35 | 37 37 | 39 39 | 25 25 | 27 27 | 29 29 | 31 31 |
0x0000170      41 41 | 43 43 | 45 45 | 47 47 | 17 17 | 21 21 | 19 19 | 23 23 |
0x0000190      33 33 | 37 37 | 35 35 | 39 39 | 25 25 | 29 29 | 27 27 | 31 31 |
0x00001b0      41 41 | 45 45 | 43 43 | 47 47 | 49 49 | 53 53 | 51 51 | 55 55 |
0x00001d0      65 65 | 69 69 | 67 67 | 71 71 | 57 57 | 61 61 | 59 59 | 63 63 |
0x00001f0      73 73 | 77 77 | 75 75 | 03 03 | 49 49 | 51 51 | 57 57 | 59 59 |
0x0000210      53 53 | 55 55 | 61 61 | 63 63 | 65 65 | 67 67 | 73 73 | 75 75 |
0x0000230      69 69 | 71 71 | 77 77 | 03 03 | 05 05 | 07 07 | 13 13 | 15 15 |
0x0000250      09 09 | 11 11 | 17 17 | 19 19 | 21 21 | 23 23 | 29 29 | 31 31 |
0x0000270      25 25 | 27 27 | 33 33 | 35 35 | 05 05 | 09 09 | 13 13 | 17 17 |
0x0000290      07 07 | 11 11 | 15 15 | 19 19 | 21 21 | 25 25 | 29 29 | 33 33 |
0x00002b0      23 23 | 27 27 | 31 31 | 35 35 | 37 37 | 41 41 | 45 45 | 49 49 |
0x00002d0      39 39 | 43 43 | 47 47 | 51 51 | 53 53 | 57 57 | 61 61 | 65 65 |
0x00002f0      55 55 | 59 59 | 63 63 | 67 67 | 37 37 | 39 39 | 53 53 | 55 55 |
0x0000310      41 41 | 43 43 | 57 57 | 59 59 | 45 45 | 47 47 | 61 61 | 63 63 |
0x0000330      49 49 | 51 51 | 65 65 | 67 67 | 69 69 | 71 71 | 03 03 | 05 05 |
0x0000350      73 73 | 75 75 | 07 07 | 09 09 | 77 77 | 01 01 | 11 11 | 13 13 |
0x0000370      03 03 | 01 01 | 15 15 | 17 17 | 69 69 | 73 73 | 03 03 | 07 07 |
0x0000390      71 71 | 75 75 | 05 05 | 09 09 | 77 77 | 03 03 | 11 11 | 15 15 |
0x00003b0      01 01 | 01 01 | 13 13 | 17 17 | 19 19 | 23 23 | 35 35 | 39 39 |
0x00003d0      21 21 | 25 25 | 37 37 | 41 41 | 27 27 | 31 31 | 43 43 | 47 47 |
0x00003f0      29 29 | 33 33 | 45 45 | 49 49 | 19 19 | 21 21 | 23 23 | 25 25 |
```

2.2 SECOND SET

```
Hop sequence {k} for PAGE SCAN/INQUIRY SCAN SUBSTATE:
CLKN start:      0x0000000
ULAP:            0x2a96ef25
#ticks:          0000 | 1000 | 2000 | 3000 | 4000 | 5000 | 6000 | 7000 |
                 -------------------------------------------------------
0x0000000:         49 |   13 |   17 |   51 |   55 |   19 |   23 |   53 |
0x0008000:         57 |   21 |   25 |   27 |   31 |   74 |   78 |   29 |
0x0010000:         33 |   76 |    1 |   35 |   39 |    3 |    7 |   37 |
0x0018000:         41 |    5 |    9 |   43 |   47 |   11 |   15 |   45 |
0x0020000:         49 |   13 |   17 |   51 |   55 |   19 |   23 |   53 |
0x0028000:         57 |   21 |   25 |   27 |   31 |   74 |   78 |   29 |
0x0030000:         33 |   76 |    1 |   35 |   39 |    3 |    7 |   37 |
0x0038000:         41 |    5 |    9 |   43 |   47 |   11 |   15 |   45 |

Hop sequence {k} for PAGE STATE/INQUIRY SUBSTATE:
CLKE start:      0x0000000
ULAP:            0x2a96ef25
#ticks:          00 01 02 03 | 04 05 06 07 | 08 09 0a 0b | 0c 0d 0e 0f |
                 ---------------------------------------------------------
0x0000000:       41 05 10 04 | 09 43 06 16 | 47 11 18 12 | 15 45 14 32 |
0x0000010:       49 13 34 28 | 17 51 30 24 | 55 19 26 20 | 23 53 22 40 |
0x0000020:       41 05 10 04 | 09 43 06 16 | 47 11 18 12 | 15 45 14 32 |
0x0000030:       49 13 34 28 | 17 51 30 24 | 55 19 26 20 | 23 53 22 40 |
...
0x0001000:       41 21 10 36 | 25 27 38 63 | 31 74 65 59 | 78 29 61 00 |
0x0001010:       33 76 02 75 | 01 35 77 71 | 39 03 73 67 | 07 37 69 08 |
0x0001020:       41 21 10 36 | 25 27 38 63 | 31 74 65 59 | 78 29 61 00 |
0x0001030:       33 76 02 75 | 01 35 77 71 | 39 03 73 67 | 07 37 69 08 |
...
0x0002000:       57 21 42 36 | 09 43 06 16 | 47 11 18 12 | 15 45 14 32 |
0x0002010:       49 13 34 28 | 17 51 30 24 | 55 19 26 20 | 23 53 22 40 |
0x0002020:       57 21 42 36 | 09 43 06 16 | 47 11 18 12 | 15 45 14 32 |
0x0002030:       49 13 34 28 | 17 51 30 24 | 55 19 26 20 | 23 53 22 40 |
...
0x0003000:       41 05 10 04 | 09 27 06 63 | 31 74 65 59 | 78 29 61 00 |
0x0003010:       33 76 02 75 | 01 35 77 71 | 39 03 73 67 | 07 37 69 08 |
0x0003020:       41 05 10 04 | 09 27 06 63 | 31 74 65 59 | 78 29 61 00 |
0x0003030:       33 76 02 75 | 01 35 77 71 | 39 03 73 67 | 07 37 69 08 |

Hop sequence {k} for SLAVE PAGE RESPONSE SUBSTATE:
CLKN* =          0x0000010
ULAP:            0x2a96ef25
#ticks:          00 | 02 04 | 06 08 | 0a 0c | 0e 10 | 12 14 | 16 18 | 1a 1c | 1e
                 ----------------------------------------------------------------
0x0000012:       34 | 13 28 | 17 30 | 51 24 | 55 26 | 19 20 | 23 22 | 53 40 | 57
0x0000032:       42 | 21 36 | 25 38 | 27 63 | 31 65 | 74 59 | 78 61 | 29 00 | 33
0x0000052:       02 | 76 75 | 01 77 | 35 71 | 39 73 | 03 67 | 07 69 | 37 08 | 41
0x0000072:       10 | 05 04 | 09 06 | 43 16 | 47 18 | 11 12 | 15 14 | 45 32 | 49

Hop sequence {k} for MASTER PAGE RESPONSE SUBSTATE:
Offset value:    24
CLKE* =          0x0000012
ULAP:            0x2a96ef25
#ticks:          00 02 | 04 06 | 08 0a | 0c 0e | 10 12 | 14 16 | 18 1a | 1c 1e |
                 ----------------------------------------------------------------
0x0000014:       13 28 | 17 30 | 51 24 | 55 26 | 19 20 | 23 22 | 53 40 | 57 42 |
0x0000034:       21 36 | 25 38 | 27 63 | 31 65 | 74 59 | 78 61 | 29 00 | 33 02 |
0x0000054:       76 75 | 01 77 | 35 71 | 39 73 | 03 67 | 07 69 | 37 08 | 41 10 |
0x0000074:       05 04 | 09 06 | 43 16 | 47 18 | 11 12 | 15 14 | 45 32 | 49 34 |
```

Hop sequence {k} for CONNECTION STATE (Basic channel hopping sequence; ie, non-AFH):
CLK start: 0x0000010
ULAP: 0x2a96ef25

#ticks:	00 02	04 06	08 0a	0c 0e	10 12	14 16	18 1a	1c 1e
0x0000010:	55 26	19 20	23 22	53 40	57 42	21 36	25 38	27 63
0x0000030:	31 65	74 59	78 61	29 00	33 02	76 75	01 77	35 71
0x0000050:	39 73	03 67	07 69	37 08	41 10	05 04	09 06	43 16
0x0000070:	47 18	11 12	15 14	45 32	02 66	47 60	49 64	04 54
0x0000090:	06 58	51 52	53 56	08 70	10 74	55 68	57 72	59 14
0x00000b0:	61 18	27 12	29 16	63 30	65 34	31 28	33 32	67 22
0x00000d0:	69 26	35 20	37 24	71 38	73 42	39 36	41 40	75 46
0x00000f0:	77 50	43 44	45 48	00 62	26 11	69 05	73 07	36 17
0x0000110:	40 19	04 13	08 15	38 25	42 27	06 21	10 23	12 48
0x0000130:	16 50	59 44	63 46	14 56	18 58	61 52	65 54	28 64
0x0000150:	32 66	75 60	00 62	30 72	34 74	77 68	02 70	20 01
0x0000170:	24 03	67 76	71 78	22 09	58 43	24 37	26 41	68 47
0x0000190:	70 51	36 45	38 49	72 55	74 59	40 53	42 57	44 78
0x00001b0:	46 03	12 76	14 01	48 07	50 11	16 05	18 09	60 15
0x00001d0:	62 19	28 13	30 17	64 23	66 27	32 21	34 25	52 31
0x00001f0:	54 35	20 29	22 33	56 39	19 04	62 63	66 00	07 73
0x0000210:	11 10	54 69	58 06	23 75	27 12	70 71	74 08	76 33
0x0000230:	01 49	44 29	48 45	13 35	17 51	60 31	64 47	05 41
0x0000250:	09 57	52 37	56 53	21 43	25 59	68 39	72 55	78 65
0x0000270:	03 02	46 61	50 77	15 67	51 36	17 18	19 34	41 24
0x0000290:	43 40	09 22	11 38	57 28	59 44	25 26	27 42	29 63
0x00002b0:	31 00	76 61	78 77	45 67	47 04	13 65	15 02	37 71
0x00002d0:	39 08	05 69	07 06	53 75	55 12	21 73	23 10	33 16
0x00002f0:	35 32	01 14	03 30	49 20	75 60	39 48	43 56	00 66
0x0000310:	04 74	47 62	51 70	08 68	12 76	55 64	59 72	61 18
0x0000330:	65 26	29 14	33 22	69 20	73 28	37 16	41 24	77 34
0x0000350:	02 42	45 30	49 38	06 36	10 44	53 32	57 40	63 50
0x0000370:	67 58	31 46	35 54	71 52	28 13	73 03	75 11	34 17
0x0000390:	36 25	02 15	04 23	42 21	44 29	10 19	12 27	14 48
0x00003b0:	16 56	61 46	63 54	22 52	24 60	69 50	71 58	30 64
0x00003d0:	32 72	77 62	00 70	38 68	40 76	06 66	08 74	18 01
0x00003f0:	20 09	65 78	67 07	26 05	44 29	32 23	36 25	70 43

Sample Data

```
Hop Sequence {k} for CONNECTION STATE (Adapted channel hopping sequence with
all channel used; ie, AFH(79)):
CLK start:     0x0000010
ULAP:          0x2a96ef25
Used Channels:0x7fffffffffffffffff
#ticks:        00 02 | 04 06 | 08 0a | 0c 0e | 10 12 | 14 16 | 18 1a | 1c 1e |
               ---------------------------------------------------------------
0x0000010      55 55 | 19 19 | 23 23 | 53 53 | 57 57 | 21 21 | 25 25 | 27 27 |
0x0000030      31 31 | 74 74 | 78 78 | 29 29 | 33 33 | 76 76 | 01 01 | 35 35 |
0x0000050      39 39 | 03 03 | 07 07 | 37 37 | 41 41 | 05 05 | 09 09 | 43 43 |
0x0000070      47 47 | 11 11 | 15 15 | 45 45 | 02 02 | 47 47 | 49 49 | 04 04 |
0x0000090      06 06 | 51 51 | 53 53 | 08 08 | 10 10 | 55 55 | 57 57 | 59 59 |
0x00000b0      61 61 | 27 27 | 29 29 | 63 63 | 65 65 | 31 31 | 33 33 | 67 67 |
0x00000d0      69 69 | 35 35 | 37 37 | 71 71 | 73 73 | 39 39 | 41 41 | 75 75 |
0x00000f0      77 77 | 43 43 | 45 45 | 00 00 | 26 26 | 69 69 | 73 73 | 36 36 |
0x0000110      40 40 | 04 04 | 08 08 | 38 38 | 42 42 | 06 06 | 10 10 | 12 12 |
0x0000130      16 16 | 59 59 | 63 63 | 14 14 | 18 18 | 61 61 | 65 65 | 28 28 |
0x0000150      32 32 | 75 75 | 00 00 | 30 30 | 34 34 | 77 77 | 02 02 | 20 20 |
0x0000170      24 24 | 67 67 | 71 71 | 22 22 | 58 58 | 24 24 | 26 26 | 68 68 |
0x0000190      70 70 | 36 36 | 38 38 | 72 72 | 74 74 | 40 40 | 42 42 | 44 44 |
0x00001b0      46 46 | 12 12 | 14 14 | 48 48 | 50 50 | 16 16 | 18 18 | 60 60 |
0x00001d0      62 62 | 28 28 | 30 30 | 64 64 | 66 66 | 32 32 | 34 34 | 52 52 |
0x00001f0      54 54 | 20 20 | 22 22 | 56 56 | 19 19 | 62 62 | 66 66 | 07 07 |
0x0000210      11 11 | 54 54 | 58 58 | 23 23 | 27 27 | 70 70 | 74 74 | 76 76 |
0x0000230      01 01 | 44 44 | 48 48 | 13 13 | 17 17 | 60 60 | 64 64 | 05 05 |
0x0000250      09 09 | 52 52 | 56 56 | 21 21 | 25 25 | 68 68 | 72 72 | 78 78 |
0x0000270      03 03 | 46 46 | 50 50 | 15 15 | 51 51 | 17 17 | 19 19 | 41 41 |
0x0000290      43 43 | 09 09 | 11 11 | 57 57 | 59 59 | 25 25 | 27 27 | 29 29 |
0x00002b0      31 31 | 76 76 | 78 78 | 45 45 | 47 47 | 13 13 | 15 15 | 37 37 |
0x00002d0      39 39 | 05 05 | 07 07 | 53 53 | 55 55 | 21 21 | 23 23 | 33 33 |
0x00002f0      35 35 | 01 01 | 03 03 | 49 49 | 75 75 | 39 39 | 43 43 | 00 00 |
0x0000310      04 04 | 47 47 | 51 51 | 08 08 | 12 12 | 55 55 | 59 59 | 61 61 |
0x0000330      65 65 | 29 29 | 33 33 | 69 69 | 73 73 | 37 37 | 41 41 | 77 77 |
0x0000350      02 02 | 45 45 | 49 49 | 06 06 | 10 10 | 53 53 | 57 57 | 63 63 |
0x0000370      67 67 | 31 31 | 35 35 | 71 71 | 28 28 | 73 73 | 75 75 | 34 34 |
0x0000390      36 36 | 02 02 | 04 04 | 42 42 | 44 44 | 10 10 | 12 12 | 14 14 |
0x00003b0      16 16 | 61 61 | 63 63 | 22 22 | 24 24 | 69 69 | 71 71 | 30 30 |
0x00003d0      32 32 | 77 77 | 00 00 | 38 38 | 40 40 | 06 06 | 08 08 | 18 18 |
0x00003f0      20 20 | 65 65 | 67 67 | 26 26 | 44 44 | 32 32 | 36 36 | 70 70 |
```

Sample Data

```
Hop Sequence {k} for CONNECTION STATE (Adapted channel hopping sequence with
channels 0 to 21 unused):
CLK start:     0x0000010
ULAP:          0x2a96ef25
Used Channels:0x7fffffffffffffc00000
#ticks:        00 02 | 04 06 | 08 0a | 0c 0e | 10 12 | 14 16 | 18 1a | 1c 1e |
               ---------------------------------------------------------------
0x0000010      55 55 | 50 50 | 23 23 | 53 53 | 57 57 | 52 52 | 25 25 | 27 27 |
0x0000030      31 31 | 74 74 | 78 78 | 29 29 | 33 33 | 76 76 | 32 32 | 35 35 |
0x0000050      39 39 | 34 34 | 38 38 | 37 37 | 41 41 | 36 36 | 40 40 | 43 43 |
0x0000070      47 47 | 42 42 | 46 46 | 45 45 | 55 55 | 47 47 | 49 49 | 57 57 |
0x0000090      59 59 | 51 51 | 53 53 | 61 61 | 63 63 | 55 55 | 57 57 | 59 59 |
0x00000b0      61 61 | 27 27 | 29 29 | 63 63 | 65 65 | 31 31 | 33 33 | 67 67 |
0x00000d0      69 69 | 35 35 | 37 37 | 71 71 | 73 73 | 39 39 | 41 41 | 75 75 |
0x00000f0      77 77 | 43 43 | 45 45 | 53 53 | 26 26 | 69 69 | 73 73 | 36 36 |
0x0000110      40 40 | 57 57 | 61 61 | 38 38 | 42 42 | 59 59 | 63 63 | 65 65 |
0x0000130      69 69 | 59 59 | 63 63 | 67 67 | 71 71 | 61 61 | 65 65 | 28 28 |
0x0000150      32 32 | 75 75 | 53 53 | 30 30 | 34 34 | 77 77 | 55 55 | 73 73 |
0x0000170      24 24 | 67 67 | 71 71 | 22 22 | 58 58 | 24 24 | 26 26 | 68 68 |
0x0000190      70 70 | 36 36 | 38 38 | 72 72 | 74 74 | 40 40 | 42 42 | 44 44 |
0x00001b0      46 46 | 65 65 | 67 67 | 48 48 | 50 50 | 69 69 | 71 71 | 60 60 |
0x00001d0      62 62 | 28 28 | 30 30 | 64 64 | 66 66 | 32 32 | 34 34 | 52 52 |
0x00001f0      54 54 | 73 73 | 22 22 | 56 56 | 37 37 | 62 62 | 66 66 | 25 25 |
0x0000210      29 29 | 54 54 | 58 58 | 23 23 | 27 27 | 70 70 | 74 74 | 76 76 |
0x0000230      76 76 | 44 44 | 48 48 | 31 31 | 35 35 | 60 60 | 64 64 | 23 23 |
0x0000250      27 27 | 52 52 | 56 56 | 39 39 | 25 25 | 68 68 | 72 72 | 78 78 |
0x0000270      78 78 | 46 46 | 50 50 | 33 33 | 51 51 | 35 35 | 37 37 | 41 41 |
0x0000290      43 43 | 27 27 | 29 29 | 57 57 | 59 59 | 25 25 | 27 27 | 29 29 |
0x00002b0      31 31 | 76 76 | 78 78 | 45 45 | 47 47 | 31 31 | 33 33 | 37 37 |
0x00002d0      39 39 | 23 23 | 25 25 | 53 53 | 55 55 | 39 39 | 23 23 | 33 33 |
0x00002f0      35 35 | 76 76 | 78 78 | 49 49 | 75 75 | 39 39 | 43 43 | 40 40 |
0x0000310      44 44 | 47 47 | 51 51 | 48 48 | 52 52 | 55 55 | 59 59 | 61 61 |
0x0000330      65 65 | 29 29 | 33 33 | 69 69 | 73 73 | 37 37 | 41 41 | 77 77 |
0x0000350      42 42 | 45 45 | 49 49 | 46 46 | 50 50 | 53 53 | 57 57 | 63 63 |
0x0000370      67 67 | 31 31 | 35 35 | 71 71 | 28 28 | 73 73 | 75 75 | 34 34 |
0x0000390      36 36 | 42 42 | 44 44 | 42 42 | 44 44 | 50 50 | 52 52 | 54 54 |
0x00003b0      56 56 | 61 61 | 63 63 | 22 22 | 24 24 | 69 69 | 71 71 | 30 30 |
0x00003d0      32 32 | 77 77 | 40 40 | 38 38 | 40 40 | 46 46 | 48 48 | 58 58 |
0x00003f0      60 60 | 65 65 | 67 67 | 26 26 | 44 44 | 32 32 | 36 36 | 70 70 |
```

Sample Data

```
Hop Sequence {k} for CONNECTION STATE (Adapted channel hopping sequence with
even channels used):
CLK start:     0x0000010
ULAP:          0x2a96ef25
Used Channels:0x55555555555555555555
#ticks:        00 02 | 04 06 | 08 0a | 0c 0e | 10 12 | 14 16 | 18 1a | 1c 1e |
               ---------------------------------------------------------------
0x0000010      52 52 | 16 16 | 20 20 | 50 50 | 54 54 | 18 18 | 22 22 | 24 24 |
0x0000030      28 28 | 74 74 | 78 78 | 26 26 | 30 30 | 76 76 | 78 78 | 32 32 |
0x0000050      36 36 | 00 00 | 04 04 | 34 34 | 38 38 | 02 02 | 06 06 | 40 40 |
0x0000070      44 44 | 08 08 | 12 12 | 42 42 | 02 02 | 44 44 | 46 46 | 04 04 |
0x0000090      06 06 | 48 48 | 50 50 | 08 08 | 10 10 | 52 52 | 54 54 | 56 56 |
0x00000b0      58 58 | 24 24 | 26 26 | 60 60 | 62 62 | 28 28 | 30 30 | 64 64 |
0x00000d0      66 66 | 32 32 | 34 34 | 68 68 | 70 70 | 36 36 | 38 38 | 72 72 |
0x00000f0      74 74 | 40 40 | 42 42 | 00 00 | 26 26 | 66 66 | 70 70 | 36 36 |
0x0000110      40 40 | 04 04 | 08 08 | 38 38 | 42 42 | 06 06 | 10 10 | 12 12 |
0x0000130      16 16 | 56 56 | 60 60 | 14 14 | 18 18 | 58 58 | 62 62 | 28 28 |
0x0000150      32 32 | 72 72 | 00 00 | 30 30 | 34 34 | 74 74 | 02 02 | 20 20 |
0x0000170      24 24 | 64 64 | 68 68 | 22 22 | 58 58 | 24 24 | 26 26 | 68 68 |
0x0000190      70 70 | 36 36 | 38 38 | 72 72 | 74 74 | 40 40 | 42 42 | 44 44 |
0x00001b0      46 46 | 12 12 | 14 14 | 48 48 | 50 50 | 16 16 | 18 18 | 60 60 |
0x00001d0      62 62 | 28 28 | 30 30 | 64 64 | 66 66 | 32 32 | 34 34 | 52 52 |
0x00001f0      54 54 | 20 20 | 22 22 | 56 56 | 14 14 | 62 62 | 66 66 | 02 02 |
0x0000210      06 06 | 54 54 | 58 58 | 18 18 | 22 22 | 70 70 | 74 74 | 76 76 |
0x0000230      76 76 | 44 44 | 48 48 | 08 08 | 12 12 | 60 60 | 64 64 | 00 00 |
0x0000250      04 04 | 52 52 | 56 56 | 16 16 | 20 20 | 68 68 | 72 72 | 78 78 |
0x0000270      78 78 | 46 46 | 50 50 | 10 10 | 46 46 | 12 12 | 14 14 | 36 36 |
0x0000290      38 38 | 04 04 | 06 06 | 52 52 | 54 54 | 20 20 | 22 22 | 24 24 |
0x00002b0      26 26 | 76 76 | 78 78 | 40 40 | 42 42 | 08 08 | 10 10 | 32 32 |
0x00002d0      34 34 | 00 00 | 02 02 | 48 48 | 50 50 | 16 16 | 18 18 | 28 28 |
0x00002f0      30 30 | 76 76 | 78 78 | 44 44 | 70 70 | 34 34 | 38 38 | 00 00 |
0x0000310      04 04 | 42 42 | 46 46 | 08 08 | 12 12 | 50 50 | 54 54 | 56 56 |
0x0000330      60 60 | 24 24 | 28 28 | 64 64 | 68 68 | 32 32 | 36 36 | 72 72 |
0x0000350      02 02 | 40 40 | 44 44 | 06 06 | 10 10 | 48 48 | 52 52 | 58 58 |
0x0000370      62 62 | 26 26 | 30 30 | 66 66 | 28 28 | 68 68 | 70 70 | 34 34 |
0x0000390      36 36 | 02 02 | 04 04 | 42 42 | 44 44 | 10 10 | 12 12 | 14 14 |
0x00003b0      16 16 | 56 56 | 58 58 | 22 22 | 24 24 | 64 64 | 66 66 | 30 30 |
0x00003d0      32 32 | 72 72 | 00 00 | 38 38 | 40 40 | 06 06 | 08 08 | 18 18 |
0x00003f0      20 20 | 60 60 | 62 62 | 26 26 | 44 44 | 32 32 | 36 36 | 70 70 |
```

Sample Data

```
Hop Sequence {k} for CONNECTION STATE (Adapted channel hopping sequence with
odd channels used):
CLK start:     0x0000010
ULAP:          0x2a96ef25
Used Channels:0x2aaaaaaaaaaaaaaaaaa
#ticks:        00 02 | 04 06 | 08 0a | 0c 0e | 10 12 | 14 16 | 18 1a | 1c 1e |
               ---------------------------------------------------------------
0x0000010      55 55 | 19 19 | 23 23 | 53 53 | 57 57 | 21 21 | 25 25 | 27 27 |
0x0000030      31 31 | 77 77 | 03 03 | 29 29 | 33 33 | 01 01 | 01 01 | 35 35 |
0x0000050      39 39 | 03 03 | 07 07 | 37 37 | 41 41 | 05 05 | 09 09 | 43 43 |
0x0000070      47 47 | 11 11 | 15 15 | 45 45 | 07 07 | 47 47 | 49 49 | 09 09 |
0x0000090      11 11 | 51 51 | 53 53 | 13 13 | 15 15 | 55 55 | 57 57 | 59 59 |
0x00000b0      61 61 | 27 27 | 29 29 | 63 63 | 65 65 | 31 31 | 33 33 | 67 67 |
0x00000d0      69 69 | 35 35 | 37 37 | 71 71 | 73 73 | 39 39 | 41 41 | 75 75 |
0x00000f0      77 77 | 43 43 | 45 45 | 05 05 | 31 31 | 69 69 | 73 73 | 41 41 |
0x0000110      45 45 | 09 09 | 13 13 | 43 43 | 47 47 | 11 11 | 15 15 | 17 17 |
0x0000130      21 21 | 59 59 | 63 63 | 19 19 | 23 23 | 61 61 | 65 65 | 33 33 |
0x0000150      37 37 | 75 75 | 05 05 | 35 35 | 39 39 | 77 77 | 07 07 | 25 25 |
0x0000170      29 29 | 67 67 | 71 71 | 27 27 | 63 63 | 29 29 | 31 31 | 73 73 |
0x0000190      75 75 | 41 41 | 43 43 | 77 77 | 01 01 | 45 45 | 47 47 | 49 49 |
0x00001b0      51 51 | 17 17 | 19 19 | 53 53 | 55 55 | 21 21 | 23 23 | 65 65 |
0x00001d0      67 67 | 33 33 | 35 35 | 69 69 | 71 71 | 37 37 | 39 39 | 57 57 |
0x00001f0      59 59 | 25 25 | 27 27 | 61 61 | 19 19 | 67 67 | 71 71 | 07 07 |
0x0000210      11 11 | 59 59 | 63 63 | 23 23 | 27 27 | 75 75 | 01 01 | 03 03 |
0x0000230      01 01 | 49 49 | 53 53 | 13 13 | 17 17 | 65 65 | 69 69 | 05 05 |
0x0000250      09 09 | 57 57 | 61 61 | 21 21 | 25 25 | 73 73 | 77 77 | 05 05 |
0x0000270      03 03 | 51 51 | 55 55 | 15 15 | 51 51 | 17 17 | 19 19 | 41 41 |
0x0000290      43 43 | 09 09 | 11 11 | 57 57 | 59 59 | 25 25 | 27 27 | 29 29 |
0x00002b0      31 31 | 03 03 | 05 05 | 45 45 | 47 47 | 13 13 | 15 15 | 37 37 |
0x00002d0      39 39 | 05 05 | 07 07 | 53 53 | 55 55 | 21 21 | 23 23 | 33 33 |
0x00002f0      35 35 | 01 01 | 03 03 | 49 49 | 75 75 | 39 39 | 43 43 | 07 07 |
0x0000310      11 11 | 47 47 | 51 51 | 15 15 | 19 19 | 55 55 | 59 59 | 61 61 |
0x0000330      65 65 | 29 29 | 33 33 | 69 69 | 73 73 | 37 37 | 41 41 | 77 77 |
0x0000350      09 09 | 45 45 | 49 49 | 13 13 | 17 17 | 53 53 | 57 57 | 63 63 |
0x0000370      67 67 | 31 31 | 35 35 | 71 71 | 35 35 | 73 73 | 75 75 | 41 41 |
0x0000390      43 43 | 09 09 | 11 11 | 49 49 | 51 51 | 17 17 | 19 19 | 21 21 |
0x00003b0      23 23 | 61 61 | 63 63 | 29 29 | 31 31 | 69 69 | 71 71 | 37 37 |
0x00003d0      39 39 | 77 77 | 07 07 | 45 45 | 47 47 | 13 13 | 15 15 | 25 25 |
0x00003f0      27 27 | 65 65 | 67 67 | 33 33 | 51 51 | 39 39 | 43 43 | 77 77 |
```

2.3 THIRD SET

```
Hop sequence {k} for PAGE SCAN/INQUIRY SCAN SUBSTATE:
CLKN start:      0x0000000
ULAP:            0x6587cba9
#ticks:          0000 | 1000 | 2000 | 3000 | 4000 | 5000 | 6000 | 7000 |
                 -------------------------------------------------------
0x0000000:         16 |   65 |   67 |   18 |   20 |   53 |   55 |    6 |
0x0008000:          8 |   57 |   59 |   10 |   12 |   69 |   71 |   22 |
0x0010000:         24 |   73 |   75 |   26 |   28 |   45 |   47 |   77 |
0x0018000:          0 |   49 |   51 |    2 |    4 |   61 |   63 |   14 |
0x0020000:         16 |   65 |   67 |   18 |   20 |   53 |   55 |    6 |
0x0028000:          8 |   57 |   59 |   10 |   12 |   69 |   71 |   22 |
0x0030000:         24 |   73 |   75 |   26 |   28 |   45 |   47 |   77 |
0x0038000:          0 |   49 |   51 |    2 |    4 |   61 |   63 |   14 |

Hop sequence {k} for PAGE STATE/INQUIRY SUBSTATE:
CLKE start:      0x0000000
ULAP:            0x6587cba9
#ticks:          00 01 02 03 | 04 05 06 07 | 08 09 0a 0b | 0c 0d 0e 0f |
                 -------------------------------------------------------
0x0000000:       00 49 36 38 | 51 02 42 40 | 04 61 44 46 | 63 14 50 48 |
0x0000010:       16 65 52 54 | 67 18 58 56 | 20 53 60 62 | 55 06 66 64 |
0x0000020:       00 49 36 38 | 51 02 42 40 | 04 61 44 46 | 63 14 50 48 |
0x0000030:       16 65 52 54 | 67 18 58 56 | 20 53 60 62 | 55 06 66 64 |
...
0x0001000:       00 57 36 70 | 59 10 74 72 | 12 69 76 78 | 71 22 03 01 |
0x0001010:       24 73 05 07 | 75 26 11 09 | 28 45 13 30 | 47 77 34 32 |
0x0001020:       00 57 36 70 | 59 10 74 72 | 12 69 76 78 | 71 22 03 01 |
0x0001030:       24 73 05 07 | 75 26 11 09 | 28 45 13 30 | 47 77 34 32 |
...
0x0002000:       08 57 68 70 | 51 02 42 40 | 04 61 44 46 | 63 14 50 48 |
0x0002010:       16 65 52 54 | 67 18 58 56 | 20 53 60 62 | 55 06 66 64 |
0x0002020:       08 57 68 70 | 51 02 42 40 | 04 61 44 46 | 63 14 50 48 |
0x0002030:       16 65 52 54 | 67 18 58 56 | 20 53 60 62 | 55 06 66 64 |
...
0x0003000:       00 49 36 38 | 51 10 42 72 | 12 69 76 78 | 71 22 03 01 |
0x0003010:       24 73 05 07 | 75 26 11 09 | 28 45 13 30 | 47 77 34 32 |
0x0003020:       00 49 36 38 | 51 10 42 72 | 12 69 76 78 | 71 22 03 01 |
0x0003030:       24 73 05 07 | 75 26 11 09 | 28 45 13 30 | 47 77 34 32 |

Hop sequence {k} for SLAVE PAGE RESPONSE SUBSTATE:
CLKN* =          0x0000010
ULAP:            0x6587cba9
#ticks:          00 | 02 04 | 06 08 | 0a 0c | 0e 10 | 12 14 | 16 18 | 1a 1c | 1e
                 ---------------------------------------------------------------
0x0000012:       52 | 65 54 | 67 58 | 18 56 | 20 60 | 53 62 | 55 66 | 06 64 | 08
0x0000032:       68 | 57 70 | 59 74 | 10 72 | 12 76 | 69 78 | 71 03 | 22 01 | 24
0x0000052:       05 | 73 07 | 75 11 | 26 09 | 28 13 | 45 30 | 47 34 | 77 32 | 00
0x0000072:       36 | 49 38 | 51 42 | 02 40 | 04 44 | 61 46 | 63 50 | 14 48 | 16

Hop sequence {k} for MASTER PAGE RESPONSE SUBSTATE:
Offset value:    24
CLKE* =          0x0000012
ULAP:            0x6587cba9
#ticks:          00 02 | 04 06 | 08 0a | 0c 0e | 10 12 | 14 16 | 18 1a | 1c 1e |
                 -------------------------------------------------------------
0x0000014:       65 54 | 67 58 | 18 56 | 20 60 | 53 62 | 55 66 | 06 64 | 08 68 |
0x0000034:       57 70 | 59 74 | 10 72 | 12 76 | 69 78 | 71 03 | 22 01 | 24 05 |
0x0000054:       73 07 | 75 11 | 26 09 | 28 13 | 45 30 | 47 34 | 77 32 | 00 36 |
0x0000074:       49 38 | 51 42 | 02 40 | 04 44 | 61 46 | 63 50 | 14 48 | 16 52 |
```

Hop sequence {k} for CONNECTION STATE (Basic channel hopping sequence; ie, non-AFH):
CLK start: 0x0000010
ULAP: 0x6587cba9

#ticks:	00 02	04 06	08 0a	0c 0e	10 12	14 16	18 1a	1c 1e
0x0000010:	20 60	53 62	55 66	06 64	08 68	57 70	59 74	10 72
0x0000030:	12 76	69 78	71 03	22 01	24 05	73 07	75 11	26 09
0x0000050:	28 13	45 30	47 34	77 32	00 36	49 38	51 42	02 40
0x0000070:	04 44	61 46	63 50	14 48	50 05	16 07	20 09	48 11
0x0000090:	52 13	06 15	10 17	38 19	42 21	08 23	12 25	40 27
0x00000b0:	44 29	22 31	26 33	54 35	58 37	24 39	28 41	56 43
0x00000d0:	60 45	77 62	02 64	30 66	34 68	00 70	04 72	32 74
0x00000f0:	36 76	14 78	18 01	46 03	72 29	42 39	44 43	74 41
0x0000110:	76 45	46 47	48 51	78 49	01 53	50 63	52 67	03 65
0x0000130:	05 69	54 55	56 59	07 57	09 61	58 71	60 75	11 73
0x0000150:	13 77	30 15	32 19	62 17	64 21	34 31	36 35	66 33
0x0000170:	68 37	38 23	40 27	70 25	27 61	72 71	76 73	25 75
0x0000190:	29 77	78 00	03 02	31 04	35 06	01 16	05 18	33 20
0x00001b0:	37 22	07 08	11 10	39 12	43 14	09 24	13 26	41 28
0x00001d0:	45 30	62 47	66 49	15 51	19 53	64 63	68 65	17 67
0x00001f0:	21 69	70 55	74 57	23 59	53 22	35 12	37 28	67 14
0x0000210:	69 30	23 32	25 48	55 34	57 50	39 40	41 56	71 42
0x0000230:	73 58	27 36	29 52	59 38	61 54	43 44	45 60	75 46
0x0000250:	77 62	15 00	17 16	47 02	49 18	31 08	33 24	63 10
0x0000270:	65 26	19 04	21 20	51 06	06 54	65 42	69 58	18 46
0x0000290:	22 62	55 64	59 01	08 68	12 05	71 72	75 09	24 76
0x00002b0:	28 13	57 66	61 03	10 70	14 07	73 74	77 11	26 78
0x00002d0:	30 15	47 32	51 48	00 36	04 52	63 40	67 56	16 44
0x00002f0:	20 60	49 34	53 50	02 38	38 78	12 05	14 13	44 07
0x0000310:	46 15	16 17	18 25	48 19	50 27	24 33	26 41	56 35
0x0000330:	58 43	20 21	22 29	52 23	54 31	28 37	30 45	60 39
0x0000350:	62 47	00 64	02 72	32 66	34 74	08 01	10 09	40 03
0x0000370:	42 11	04 68	06 76	36 70	70 31	42 35	46 43	74 39
0x0000390:	78 47	48 49	52 57	01 53	05 61	56 65	60 73	09 69
0x00003b0:	13 77	50 51	54 59	03 55	07 63	58 67	62 75	11 71
0x00003d0:	15 00	32 17	36 25	64 21	68 29	40 33	44 41	72 37
0x00003f0:	76 45	34 19	38 27	66 23	11 71	05 18	07 22	13 20

Sample Data

```
Hop Sequence {k} for CONNECTION STATE (Adapted channel hopping sequence with
all channel used; ie, AFH(79)):
CLK start:     0x0000010
ULAP:          0x6587cba9
Used Channels:0x7fffffffffffffffffff
#ticks:        00 02 | 04 06 | 08 0a | 0c 0e | 10 12 | 14 16 | 18 1a | 1c 1e |
               ---------------------------------------------------------------
0x0000010      20 20 | 53 53 | 55 55 | 06 06 | 08 08 | 57 57 | 59 59 | 10 10 |
0x0000030      12 12 | 69 69 | 71 71 | 22 22 | 24 24 | 73 73 | 75 75 | 26 26 |
0x0000050      28 28 | 45 45 | 47 47 | 77 77 | 00 00 | 49 49 | 51 51 | 02 02 |
0x0000070      04 04 | 61 61 | 63 63 | 14 14 | 50 50 | 16 16 | 20 20 | 48 48 |
0x0000090      52 52 | 06 06 | 10 10 | 38 38 | 42 42 | 08 08 | 12 12 | 40 40 |
0x00000b0      44 44 | 22 22 | 26 26 | 54 54 | 58 58 | 24 24 | 28 28 | 56 56 |
0x00000d0      60 60 | 77 77 | 02 02 | 30 30 | 34 34 | 00 00 | 04 04 | 32 32 |
0x00000f0      36 36 | 14 14 | 18 18 | 46 46 | 72 72 | 42 42 | 44 44 | 74 74 |
0x0000110      76 76 | 46 46 | 48 48 | 78 78 | 01 01 | 50 50 | 52 52 | 03 03 |
0x0000130      05 05 | 54 54 | 56 56 | 07 07 | 09 09 | 58 58 | 60 60 | 11 11 |
0x0000150      13 13 | 30 30 | 32 32 | 62 62 | 64 64 | 34 34 | 36 36 | 66 66 |
0x0000170      68 68 | 38 38 | 40 40 | 70 70 | 27 27 | 72 72 | 76 76 | 25 25 |
0x0000190      29 29 | 78 78 | 03 03 | 31 31 | 35 35 | 01 01 | 05 05 | 33 33 |
0x00001b0      37 37 | 07 07 | 11 11 | 39 39 | 43 43 | 09 09 | 13 13 | 41 41 |
0x00001d0      45 45 | 62 62 | 66 66 | 15 15 | 19 19 | 64 64 | 68 68 | 17 17 |
0x00001f0      21 21 | 70 70 | 74 74 | 23 23 | 53 53 | 35 35 | 37 37 | 67 67 |
0x0000210      69 69 | 23 23 | 25 25 | 55 55 | 57 57 | 39 39 | 41 41 | 71 71 |
0x0000230      73 73 | 27 27 | 29 29 | 59 59 | 61 61 | 43 43 | 45 45 | 75 75 |
0x0000250      77 77 | 15 15 | 17 17 | 47 47 | 49 49 | 31 31 | 33 33 | 63 63 |
0x0000270      65 65 | 19 19 | 21 21 | 51 51 | 06 06 | 65 65 | 69 69 | 18 18 |
0x0000290      22 22 | 55 55 | 59 59 | 08 08 | 12 12 | 71 71 | 75 75 | 24 24 |
0x00002b0      28 28 | 57 57 | 61 61 | 10 10 | 14 14 | 73 73 | 77 77 | 26 26 |
0x00002d0      30 30 | 47 47 | 51 51 | 00 00 | 04 04 | 63 63 | 67 67 | 16 16 |
0x00002f0      20 20 | 49 49 | 53 53 | 02 02 | 38 38 | 12 12 | 14 14 | 44 44 |
0x0000310      46 46 | 16 16 | 18 18 | 48 48 | 50 50 | 24 24 | 26 26 | 56 56 |
0x0000330      58 58 | 20 20 | 22 22 | 52 52 | 54 54 | 28 28 | 30 30 | 60 60 |
0x0000350      62 62 | 00 00 | 02 02 | 32 32 | 34 34 | 08 08 | 10 10 | 40 40 |
0x0000370      42 42 | 04 04 | 06 06 | 36 36 | 70 70 | 42 42 | 46 46 | 74 74 |
0x0000390      78 78 | 48 48 | 52 52 | 01 01 | 05 05 | 56 56 | 60 60 | 09 09 |
0x00003b0      13 13 | 50 50 | 54 54 | 03 03 | 07 07 | 58 58 | 62 62 | 11 11 |
0x00003d0      15 15 | 32 32 | 36 36 | 64 64 | 68 68 | 40 40 | 44 44 | 72 72 |
0x00003f0      76 76 | 34 34 | 38 38 | 66 66 | 11 11 | 05 05 | 07 07 | 13 13 |
```

Sample Data

```
Hop Sequence {k} for CONNECTION STATE (Adapted channel hopping sequence with
channels 0 to 21 unused):
CLK start:     0x0000010
ULAP:          0x6587cba9
Used Channels:0x7fffffffffffffc00000
#ticks:        00 02 | 04 06 | 08 0a | 0c 0e | 10 12 | 14 16 | 18 1a | 1c 1e |
               ---------------------------------------------------------------
0x0000010      29 29 | 53 53 | 55 55 | 72 72 | 74 74 | 57 57 | 59 59 | 76 76 |
0x0000030      78 78 | 69 69 | 71 71 | 22 22 | 24 24 | 73 73 | 75 75 | 26 26 |
0x0000050      28 28 | 45 45 | 47 47 | 77 77 | 66 66 | 49 49 | 51 51 | 68 68 |
0x0000070      70 70 | 61 61 | 63 63 | 23 23 | 50 50 | 25 25 | 29 29 | 48 48 |
0x0000090      52 52 | 72 72 | 76 76 | 38 38 | 42 42 | 74 74 | 78 78 | 40 40 |
0x00000b0      44 44 | 22 22 | 26 26 | 54 54 | 58 58 | 24 24 | 28 28 | 56 56 |
0x00000d0      60 60 | 77 77 | 68 68 | 30 30 | 34 34 | 66 66 | 70 70 | 32 32 |
0x00000f0      36 36 | 23 23 | 27 27 | 46 46 | 72 72 | 42 42 | 44 44 | 74 74 |
0x0000110      76 76 | 46 46 | 48 48 | 78 78 | 32 32 | 50 50 | 52 52 | 34 34 |
0x0000130      36 36 | 54 54 | 56 56 | 38 38 | 40 40 | 58 58 | 60 60 | 42 42 |
0x0000150      44 44 | 30 30 | 32 32 | 62 62 | 64 64 | 34 34 | 36 36 | 66 66 |
0x0000170      68 68 | 38 38 | 40 40 | 70 70 | 27 27 | 72 72 | 76 76 | 25 25 |
0x0000190      29 29 | 78 78 | 34 34 | 31 31 | 35 35 | 32 32 | 36 36 | 33 33 |
0x00001b0      37 37 | 38 38 | 42 42 | 39 39 | 43 43 | 40 40 | 44 44 | 41 41 |
0x00001d0      45 45 | 62 62 | 66 66 | 46 46 | 50 50 | 64 64 | 68 68 | 48 48 |
0x00001f0      52 52 | 70 70 | 74 74 | 23 23 | 53 53 | 35 35 | 37 37 | 67 67 |
0x0000210      69 69 | 23 23 | 25 25 | 55 55 | 57 57 | 39 39 | 41 41 | 71 71 |
0x0000230      73 73 | 27 27 | 29 29 | 59 59 | 61 61 | 43 43 | 45 45 | 75 75 |
0x0000250      77 77 | 46 46 | 48 48 | 47 47 | 49 49 | 31 31 | 33 33 | 63 63 |
0x0000270      65 65 | 50 50 | 52 52 | 51 51 | 59 59 | 65 65 | 69 69 | 71 71 |
0x0000290      22 22 | 55 55 | 59 59 | 61 61 | 65 65 | 71 71 | 75 75 | 24 24 |
0x00002b0      28 28 | 57 57 | 61 61 | 63 63 | 67 67 | 73 73 | 77 77 | 26 26 |
0x00002d0      30 30 | 47 47 | 51 51 | 53 53 | 57 57 | 63 63 | 67 67 | 69 69 |
0x00002f0      73 73 | 49 49 | 53 53 | 55 55 | 38 38 | 65 65 | 67 67 | 44 44 |
0x0000310      46 46 | 69 69 | 71 71 | 48 48 | 50 50 | 24 24 | 26 26 | 56 56 |
0x0000330      58 58 | 73 73 | 22 22 | 52 52 | 54 54 | 28 28 | 30 30 | 60 60 |
0x0000350      62 62 | 53 53 | 55 55 | 32 32 | 34 34 | 61 61 | 63 63 | 40 40 |
0x0000370      42 42 | 57 57 | 59 59 | 36 36 | 70 70 | 42 42 | 46 46 | 74 74 |
0x0000390      78 78 | 48 48 | 52 52 | 76 76 | 23 23 | 56 56 | 60 60 | 27 27 |
0x00003b0      31 31 | 50 50 | 54 54 | 78 78 | 25 25 | 58 58 | 62 62 | 29 29 |
0x00003d0      33 33 | 32 32 | 36 36 | 64 64 | 68 68 | 40 40 | 44 44 | 72 72 |
0x00003f0      76 76 | 34 34 | 38 38 | 66 66 | 29 29 | 23 23 | 25 25 | 31 31 |
```

Sample Data

```
Hop Sequence {k} for CONNECTION STATE (Adapted channel hopping sequence with
even channels used):
CLK start:     0x0000010
ULAP:          0x6587cba9
Used Channels:0x55555555555555555555
#ticks:        00 02 | 04 06 | 08 0a | 0c 0e | 10 12 | 14 16 | 18 1a | 1c 1e |
               ---------------------------------------------------------------
0x0000010      20 20 | 52 52 | 54 54 | 06 06 | 08 08 | 56 56 | 58 58 | 10 10 |
0x0000030      12 12 | 68 68 | 70 70 | 22 22 | 24 24 | 72 72 | 74 74 | 26 26 |
0x0000050      28 28 | 44 44 | 46 46 | 76 76 | 00 00 | 48 48 | 50 50 | 02 02 |
0x0000070      04 04 | 60 60 | 62 62 | 14 14 | 50 50 | 16 16 | 20 20 | 48 48 |
0x0000090      52 52 | 06 06 | 10 10 | 38 38 | 42 42 | 08 08 | 12 12 | 40 40 |
0x00000b0      44 44 | 22 22 | 26 26 | 54 54 | 58 58 | 24 24 | 28 28 | 56 56 |
0x00000d0      60 60 | 76 76 | 02 02 | 30 30 | 34 34 | 00 00 | 04 04 | 32 32 |
0x00000f0      36 36 | 14 14 | 18 18 | 46 46 | 72 72 | 42 42 | 44 44 | 74 74 |
0x0000110      76 76 | 46 46 | 48 48 | 78 78 | 78 78 | 50 50 | 52 52 | 00 00 |
0x0000130      02 02 | 54 54 | 56 56 | 04 04 | 06 06 | 58 58 | 60 60 | 08 08 |
0x0000150      10 10 | 30 30 | 32 32 | 62 62 | 64 64 | 34 34 | 36 36 | 66 66 |
0x0000170      68 68 | 38 38 | 40 40 | 70 70 | 24 24 | 72 72 | 76 76 | 22 22 |
0x0000190      26 26 | 78 78 | 00 00 | 28 28 | 32 32 | 78 78 | 02 02 | 30 30 |
0x00001b0      34 34 | 04 04 | 08 08 | 36 36 | 40 40 | 06 06 | 10 10 | 38 38 |
0x00001d0      42 42 | 62 62 | 66 66 | 12 12 | 16 16 | 64 64 | 68 68 | 14 14 |
0x00001f0      18 18 | 70 70 | 74 74 | 20 20 | 50 50 | 32 32 | 34 34 | 64 64 |
0x0000210      66 66 | 20 20 | 22 22 | 52 52 | 54 54 | 36 36 | 38 38 | 68 68 |
0x0000230      70 70 | 24 24 | 26 26 | 56 56 | 58 58 | 40 40 | 42 42 | 72 72 |
0x0000250      74 74 | 12 12 | 14 14 | 44 44 | 46 46 | 28 28 | 30 30 | 60 60 |
0x0000270      62 62 | 16 16 | 18 18 | 48 48 | 06 06 | 62 62 | 66 66 | 18 18 |
0x0000290      22 22 | 52 52 | 56 56 | 08 08 | 12 12 | 68 68 | 72 72 | 24 24 |
0x00002b0      28 28 | 54 54 | 58 58 | 10 10 | 14 14 | 70 70 | 74 74 | 26 26 |
0x00002d0      30 30 | 44 44 | 48 48 | 00 00 | 04 04 | 60 60 | 64 64 | 16 16 |
0x00002f0      20 20 | 46 46 | 50 50 | 02 02 | 38 38 | 12 12 | 14 14 | 44 44 |
0x0000310      46 46 | 16 16 | 18 18 | 48 48 | 50 50 | 24 24 | 26 26 | 56 56 |
0x0000330      58 58 | 20 20 | 22 22 | 52 52 | 54 54 | 28 28 | 30 30 | 60 60 |
0x0000350      62 62 | 00 00 | 02 02 | 32 32 | 34 34 | 08 08 | 10 10 | 40 40 |
0x0000370      42 42 | 04 04 | 06 06 | 36 36 | 70 70 | 42 42 | 46 46 | 74 74 |
0x0000390      78 78 | 48 48 | 52 52 | 76 76 | 00 00 | 56 56 | 60 60 | 04 04 |
0x00003b0      08 08 | 50 50 | 54 54 | 78 78 | 02 02 | 58 58 | 62 62 | 06 06 |
0x00003d0      10 10 | 32 32 | 36 36 | 64 64 | 68 68 | 40 40 | 44 44 | 72 72 |
0x00003f0      76 76 | 34 34 | 38 38 | 66 66 | 06 06 | 00 00 | 02 02 | 08 08 |
```

Sample Data

```
Hop Sequence {k} for CONNECTION STATE (Adapted channel hopping sequence with
odd channels used):
CLK start:     0x0000010
ULAP:          0x6587cba9
Used Channels:0x2aaaaaaaaaaaaaaaaaa
#ticks:        00 02 | 04 06 | 08 0a | 0c 0e | 10 12 | 14 16 | 18 1a | 1c 1e |
               ---------------------------------------------------------------
0x0000010      23 23 | 53 53 | 55 55 | 09 09 | 11 11 | 57 57 | 59 59 | 13 13 |
0x0000030      15 15 | 69 69 | 71 71 | 25 25 | 27 27 | 73 73 | 75 75 | 29 29 |
0x0000050      31 31 | 45 45 | 47 47 | 77 77 | 03 03 | 49 49 | 51 51 | 05 05 |
0x0000070      07 07 | 61 61 | 63 63 | 17 17 | 53 53 | 19 19 | 23 23 | 51 51 |
0x0000090      55 55 | 09 09 | 13 13 | 41 41 | 45 45 | 11 11 | 15 15 | 43 43 |
0x00000b0      47 47 | 25 25 | 29 29 | 57 57 | 61 61 | 27 27 | 31 31 | 59 59 |
0x00000d0      63 63 | 77 77 | 05 05 | 33 33 | 37 37 | 03 03 | 07 07 | 35 35 |
0x00000f0      39 39 | 17 17 | 21 21 | 49 49 | 75 75 | 45 45 | 47 47 | 77 77 |
0x0000110      01 01 | 49 49 | 51 51 | 03 03 | 01 01 | 53 53 | 55 55 | 03 03 |
0x0000130      05 05 | 57 57 | 59 59 | 07 07 | 09 09 | 61 61 | 63 63 | 11 11 |
0x0000150      13 13 | 33 33 | 35 35 | 65 65 | 67 67 | 37 37 | 39 39 | 69 69 |
0x0000170      71 71 | 41 41 | 43 43 | 73 73 | 27 27 | 75 75 | 01 01 | 25 25 |
0x0000190      29 29 | 03 03 | 03 03 | 31 31 | 35 35 | 01 01 | 05 05 | 33 33 |
0x00001b0      37 37 | 07 07 | 11 11 | 39 39 | 43 43 | 09 09 | 13 13 | 41 41 |
0x00001d0      45 45 | 65 65 | 69 69 | 15 15 | 19 19 | 67 67 | 71 71 | 17 17 |
0x00001f0      21 21 | 73 73 | 77 77 | 23 23 | 53 53 | 35 35 | 37 37 | 67 67 |
0x0000210      69 69 | 23 23 | 25 25 | 55 55 | 57 57 | 39 39 | 41 41 | 71 71 |
0x0000230      73 73 | 27 27 | 29 29 | 59 59 | 61 61 | 43 43 | 45 45 | 75 75 |
0x0000250      77 77 | 15 15 | 17 17 | 47 47 | 49 49 | 31 31 | 33 33 | 63 63 |
0x0000270      65 65 | 19 19 | 21 21 | 51 51 | 11 11 | 65 65 | 69 69 | 23 23 |
0x0000290      27 27 | 55 55 | 59 59 | 13 13 | 17 17 | 71 71 | 75 75 | 29 29 |
0x00002b0      33 33 | 57 57 | 61 61 | 15 15 | 19 19 | 73 73 | 77 77 | 31 31 |
0x00002d0      35 35 | 47 47 | 51 51 | 05 05 | 09 09 | 63 63 | 67 67 | 21 21 |
0x00002f0      25 25 | 49 49 | 53 53 | 07 07 | 43 43 | 17 17 | 19 19 | 49 49 |
0x0000310      51 51 | 21 21 | 23 23 | 53 53 | 55 55 | 29 29 | 31 31 | 61 61 |
0x0000330      63 63 | 25 25 | 27 27 | 57 57 | 59 59 | 33 33 | 35 35 | 65 65 |
0x0000350      67 67 | 05 05 | 07 07 | 37 37 | 39 39 | 13 13 | 15 15 | 45 45 |
0x0000370      47 47 | 09 09 | 11 11 | 41 41 | 75 75 | 47 47 | 51 51 | 01 01 |
0x0000390      05 05 | 53 53 | 57 57 | 01 01 | 05 05 | 61 61 | 65 65 | 09 09 |
0x00003b0      13 13 | 55 55 | 59 59 | 03 03 | 07 07 | 63 63 | 67 67 | 11 11 |
0x00003d0      15 15 | 37 37 | 41 41 | 69 69 | 73 73 | 45 45 | 49 49 | 77 77 |
0x00003f0      03 03 | 39 39 | 43 43 | 71 71 | 11 11 | 05 05 | 07 07 | 13 13 |
```

3 ACCESS CODE SAMPLE DATA

Different access codes (GIAC, DIACs, others...)

```
LAP with LSB as rightmost bit.

                  Bit transmit order on air
               -------------------------------->
LAP:        | Preamble:| Sync word:      | Trailer: |
-------------------------------------------------
000000      |   5     | 7e7041e3 4000000d |    5     |
ffffff      |   a     | e758b522 7ffffff2 |    a     |
9e8b33      |   5     | 475c58cc 73345e72 |    a     |
9e8b34      |   5     | 28ed3c34 cb345e72 |    a     |
9e8b36      |   5     | 62337b64 1b345e72 |    a     |
9e8b39      |   a     | c05747b9 e7345e72 |    a     |
9e8b3d      |   5     | 7084eab0 2f345e72 |    a     |
9e8b42      |   5     | 64c86d2b 90b45e72 |    a     |
9e8b48      |   a     | e3c3725e 04b45e72 |    a     |
9e8b4f      |   a     | 8c7216a6 bcb45e72 |    a     |
9e8b57      |   a     | b2f16c30 fab45e72 |    a     |
9e8b60      |   5     | 57bd3b22 c1b45e72 |    a     |
9e8b6a      |   a     | d0b62457 55b45e72 |    a     |
9e8b75      |   a     | 81843a39 abb45e72 |    a     |
9e8b81      |   5     | 0ca96681 e0745e72 |    a     |
9e8b8e      |   a     | aecd5a5c 1c745e72 |    a     |
9e8b9c      |   5     | 17453fbf ce745e72 |    a     |
9e8bab      |   a     | f20968ad f5745e72 |    a     |
9e8bbb      |   5     | 015f4a1e f7745e72 |    a     |
9e8bcc      |   a     | d8c695a0 0cf45e72 |    a     |
9e8bde      |   5     | 614ef043 def45e72 |    a     |
9e8bf1      |   a     | ba81ddc7 a3f45e72 |    a     |
9e8c05      |   5     | 64a7dc4f 680c5e72 |    a     |
9e8c1a      |   5     | 3595c221 960c5e72 |    a     |
9e8c30      |   a     | cb35cc0d 830c5e72 |    a     |
9e8c47      |   5     | 12ac13b3 788c5e72 |    a     |
9e8c5f      |   5     | 2c2f6925 3e8c5e72 |    a     |
9e8c78      |   5     | 3a351c84 078c5e72 |    a     |
9e8c92      |   5     | 7396d0f3 124c5e72 |    a     |
9e8cad      |   5     | 5b0fdfc4 6d4c5e72 |    a     |
9e8cc9      |   a     | aea2eb38 e4cc5e72 |    a     |
9e8ce6      |   5     | 756dc6bc 99cc5e72 |    a     |
9e8d04      |   5     | 214cf934 882c5e72 |    a     |
9e8d23      |   5     | 37568c95 b12c5e72 |    a     |
9e8d43      |   5     | 72281560 f0ac5e72 |    a     |
9e8d64      |   5     | 643260c1 c9ac5e72 |    a     |
9e8d86      |   a     | e044f493 986c5e72 |    a     |
9e8da9      |   5     | 3b8bd917 e56c5e72 |    a     |
9e8dcd      |   a     | ce26edeb 6cec5e72 |    a     |
9e8df2      |   a     | e6bfe2dc 13ec5e72 |    a     |
9e8e18      |   a     | 82dcde3d c61c5e72 |    a     |
9e8e3f      |   a     | 94c6ab9c ff1c5e72 |    a     |
```

Sample Data

9e8e67	a	969059a6 799c5e72	a
9e8e90	a	c4dfccef 425c5e72	a
9e8eba	5	3a7fc2c3 575c5e72	a
9e8ee5	5	57985401 69dc5e72	a
9e8f11	5	0ae2a363 623c5e72	a
9e8f3e	a	d12d8ee7 1f3c5e72	a
9e8f6c	5	547063a8 0dbc5e72	a
9e8f9b	5	063ff6e1 367c5e72	a
9e8fcb	a	c9bc5cfe f4fc5e72	a
9e8ffc	5	2cf00bec cffc5e72	a
9e902e	a	8ec5052f 5d025e72	a
9e9061	5	1074b15e 61825e72	a
9e9095	a	9d59ede6 2a425e72	a
9e90ca	a	f0be7b24 14c25e72	a
9e9100	5	10e10dd0 c0225e72	a
9e9137	a	f5ad5ac2 fb225e72	a
9e916f	a	f7fba8f8 7da25e72	a
9e91a8	5	2f490e5b c5625e72	a
9e91e2	a	94979982 91e25e72	a
9e921d	5	26cda478 2e125e72	a
9e9259	a	aacb81dd 26925e72	a
9e9296	a	bfac7f5b da525e72	a
9e92d4	a	c9a7b0a7 cad25e72	a
9e9313	a	c142bdde 32325e72	a
616cec	5	586a491f 0dcda18d	5
616ceb	5	37db2de7 b5cda18d	5
616ce9	5	7d056ab7 65cda18d	5
616ce6	a	df61566a 99cda18d	5
616ce2	5	6fb2fb63 51cda18d	5
616cdd	5	472bf454 2ecda18d	5
616cd7	a	c020eb21 bacda18d	5
616cd0	a	af918fd9 02cda18d	5
616cc8	a	9112f54f 44cda18d	5
616cbf	5	488b2af1 bf4da18d	5
616cb5	a	cf803584 2b4da18d	5
616caa	a	9eb22bea d54da18d	5
616c9e	a	a49cb509 9e4da18d	5
616c91	5	06f889d4 624da18d	5
616c83	a	bf70ec37 b04da18d	5
616c74	a	ed3f797e 8b8da18d	5
616c64	5	1e695bcd 898da18d	5
616c53	a	fb250cdf b28da18d	5
616c41	5	42ad693c 608da18d	5
616c2e	a	a5b7cc14 dd0da18d	5
616c1a	a	9f9952f7 960da18d	5
616c05	a	ceab4c99 680da18d	5
616bef	a	d403ddde fdf5a18d	5
616bd8	5	314f8acc c6f5a18d	5
616bc0	5	0fccf05a 80f5a18d	5
616ba7	5	25030d57 7975a18d	5
616b8d	a	dba3037b 6c75a18d	5
616b72	5	4439ce17 13b5a18d	5

Sample Data

616b56	a	8d417247 5ab5a18d	5
616b39	5	6a5bd76f e735a18d	5
616b1b	5	592e8166 b635a18d	5
616afc	5	28609d46 cfd5a18d	5
616adc	5	51cb8c1f 4ed5a18d	5
616abb	5	7b047112 b755a18d	5
616a99	5	4871271b e655a18d	5
616a76	5	24bdc8c4 9b95a18d	5
616a52	a	edc57494 d295a18d	5
616a2d	a	f989f30f 6d15a18d	5
616a07	5	0729fd23 7815a18d	5
6169e0	a	8bf0ba4f 81e5a18d	5
6169b8	a	89a64875 0765a18d	5
61698f	5	6cea1f67 3c65a18d	5
616965	5	2549d310 29a5a18d	5
61693a	5	48ae45d2 1725a18d	5
61690e	5	7280db31 5c25a18d	5
6168e1	a	ce1b9f34 61c5a18d	5
6168b3	5	4b46727b 7345a18d	5
616884	a	ae0a2569 4845a18d	5
616854	a	ea5fc581 4a85a18d	5
616823	5	33c61a3f b105a18d	5
6167f1	a	c49fb8c5 63f9a18d	5
6167be	5	5a2e0cb4 5f79a18d	5
61678a	5	60009257 1479a18d	5
616755	a	86314e62 eab9a18d	5
61671f	5	3defd9bb be39a18d	5
6166e8	a	bff7e728 c5d9a18d	5
6166b0	a	bda11512 4359a18d	5
616677	5	6513b3b1 fb99a18d	5
61663d	a	decd2468 af19a18d	5
616602	a	f6542b5f d019a18d	5
6165c6	a	dc44b49b d8e9a18d	5
616589	5	42f500ea e469a18d	5
61654b	a	bf2885e1 34a9a18d	5
61650c	a	ec4c69b5 4c29a18d	5

4 HEC AND PACKET HEADER SAMPLE DATA

This section contains examples of HECs computed for sample UAP and packet header contents (Data). The resulting 54 bit packet headers are shown in the rightmost column. Note that the UAP, Data and HEC values are in hexadecimal notation, while the header is in octal notation. The header is transmitted from left to right over the air.

UAP	Data	HEC	Header (octal)
00	123	e1	770007 007070 000777
47	123	06	770007 007007 700000
00	124	32	007007 007007 007700
47	124	d5	007007 007070 707077
00	125	5a	707007 007007 077070
47	125	bd	707007 007070 777707
00	126	e2	077007 007007 000777
47	126	05	077007 007070 700000
00	127	8a	777007 007007 070007
47	127	6d	777007 007070 770770
00	11b	9e	770770 007007 777007
47	11b	79	770770 007070 077770
00	11c	4d	007770 007070 770070
47	11c	aa	007770 007007 070707
00	11d	25	707770 007070 700700
47	11d	c2	707770 007007 000077
00	11e	9d	077770 007070 777007
47	11e	7a	077770 007007 077770
00	11f	f5	777770 007070 707777
47	11f	12	777770 007007 007000

5 CRC SAMPLE DATA

```
This section shows the CRC computed for a sample 10 byte payload and a UAP of 0x47.


Data:
-----

data[0] = 0x4e
data[1] = 0x01
data[2] = 0x02
data[3] = 0x03
data[4] = 0x04
data[5] = 0x05
data[6] = 0x06
data[7] = 0x07
data[8] = 0x08
data[9] = 0x09

UAP = 0x47


==> CRC = 6d d2

Codeword (hexadecimal notation):
--------------------------------

4e 01 02 03 04 05 06 07 08 09 6d d2


NB: Over the air each byte in the codeword
    is sent with the LSB first.
```

6 COMPLETE SAMPLE PACKETS

6.1 EXAMPLE OF DH1 PACKET

```
Packet header: (MSB...LSB)
--------------------------
LT_ADDR = 011
TYPE = 0100 (DH1)
FLOW = 0
ARQN = 1
SEQN = 0

Payload: (MSB...LSB)
--------------------
payload length: 5 bytes
logical channel = 10 (UA/I, Start L2CAP message)
flow = 1
data byte 1 = 00000001
data byte 2 = 00000010
data byte 3 = 00000011
data byte 4 = 00000100
data byte 5 = 00000101

HEC and CRC initialization: (MSB...LSB)
---------------------------------------
uap = 01000111

NO WHITENING USED




AIR DATA (LSB...MSB)

Packet header (incl HEC):
-------------------------
111111000
000000111000
000111000
000111111000000000000000

Payload (incl payload header and CRC):
--------------------------------------------------------------
01110100
10000000
01000000
11000000
00100000
10100000
1110110000110110
```

6.2 EXAMPLE OF DM1 PACKET

```
Packet header: (MSB...LSB)
--------------------------
LT_ADDR = 011
TYPE = 0011 (DM1)
FLOW = 0
ARQN = 1
SEQN = 0

Payload: (MSB...LSB)
--------------------
payload length: 5 bytes
logical channel = 10 (UA/I, Start L2CAP message)
flow = 1
data byte 1 = 00000001
data byte 2 = 00000010
data byte 3 = 00000011
data byte 4 = 00000100
data byte 5 = 00000101

HEC and CRC initialization: (MSB...LSB)
---------------------------------------
uap = 01000111

NO WHITENING USED




AIR DATA (LSB...MSB)

Packet header (incl HEC):
-------------------------
111111000
111111000000
000111000
111000000111111111111000

Payload (incl payload header, FEC23, CRC and 6 padded zeros):
--------------------------------------------------------------
0111010010 11001
0000000100 01011
0000110000 11110
0000100000 00111
1010000011 01100
1011000011 00010
0110000000 10001
```

7 WHITENING SEQUENCE SAMPLE DATA

This section shows the output of the whitening sequence generator.

Whitening Sequence (=D7)	Whitening LFSR D7.....D0
1	1111111
1	1101111
1	1001111
0	0001111
0	0011110
0	0111100
1	1111000
1	1100001
1	1010011
0	0110111
1	1101110
1	1001101
0	0001011
0	0010110
0	0101100
1	1011000
0	0100001
1	1000010
0	0010101
0	0101010
1	1010100
0	0111001
1	1110010
1	1110101
1	1111011
1	1100111
1	1011111
0	0101111
1	1011110
0	0101101
1	1011010
0	0100101
1	1001010
0	0000101
0	0001010
0	0010100
0	0101000
1	1010000
0	0110001
1	1100010
1	1010101
0	0111011
1	1110110

1	1111101
1	1101011
1	1000111
0	0011111
0	0111110
1	1111100
1	1101001
1	1000011
0	0010111
0	0101110
1	1011100
0	0101001
1	1010010
0	0110101
1	1101010
1	1000101
0	0011011
0	0110110
1	1101100
1	1001001
0	0000011
0	0000110
0	0001100
0	0011000
0	0110000
1	1100000
1	1010001
0	0110011
1	1100110
1	1011101
0	0101011
1	1010110
0	0111101
1	1111010
1	1100101
1	1011011
0	0100111
1	1001110
0	0001101
0	0011010
0	0110100
1	1101000
1	1000001
0	0010011
0	0100110
1	1001100
0	0001001
0	0010010
0	0100100
1	1001000
0	0000001
0	0000010

Sample Data

0	0000100
0	0001000
0	0010000
0	0100000
1	1000000
0	0010001
0	0100010
1	1000100
0	0011001
0	0110010
1	1100100
1	1011001
0	0100011
1	1000110
0	0011101
0	0111010
1	1110100
1	1111001
1	1100011
1	1010111
0	0111111
1	1111110
1	1101101
1	1001011
0	0000111
0	0001110
0	0011100
0	0111000
1	1110000
1	1110001
1	1110011
1	1110111
1	1111111

8 FEC SAMPLE DATA

```
================================================
 Rate 2/3 FEC -- (15,10) Shortened Hamming Code
================================================

Data is in hexadecimal notation, the codewords are in binary notation. The codeword bits
are sent from left to right over the air interface. The space in the codeword indicates
the start of parity bits.

Data:           Codeword:

0x001       1000000000 11010
0x002       0100000000 01101
0x004       0010000000 11100
0x008       0001000000 01110
0x010       0000100000 00111
0x020       0000010000 11001
0x040       0000001000 10110
0x080       0000000100 01011
0x100       0000000010 11111
0x200       0000000001 10101
```

9 ENCRYPTION KEY SAMPLE DATA

Explanation:

For the sections 9.1 - 9.5, the hexadecimal sample data is written with the least significant byte at the leftmost position and the most significant byte at the rightmost position. Within each byte, the *least significant bit* (LSB) is at the rightmost position and the *most significant bit* (MSB) is at the leftmost position Thus, a line reading:

aco: 48afcdd4bd40fef76693b113

means aco[0]=0x48, ac[1]=0xaf, ..., aco[11]=0x13. The LSB of aco[11] is ‘1’ and the MSB of aco[11] is ‘0’.

Key [i]:	denotes the ith sub-key in Ar or A'r;
round r:	denotes the input to the rth round;
added ->:	denotes the input to round 3 in A'r after adding original input (of round 1).

9.1 FOUR TESTS OF E1

```
rand    :00000000000000000000000000000000
address :000000000000
key     :00000000000000000000000000000000
round  1:00000000000000000000000000000000
Key [ 1]:00000000000000000000000000000000
Key [ 2]:4697b1baa3b7100ac537b3c95a28ac64
round  2:78d19f9307d2476a523ec7a8a026042a
Key [ 3]:ecabaac66795580df89af66e66dc053d
Key [ 4]:8ac3d8896ae9364943bfebd4969b68a0
round  3:600265247668dda0e81c07bbb30ed503
Key [ 5]:5d57921fd5715cbb22c1be7bbc996394
Key [ 6]:2a61b8343219fdfb1740e6511d41448f
round  4:d7552ef7cc9dbde568d80c2215bc4277
Key [ 7]:dd0480dee731d67f01a2f739da6f23ca
Key [ 8]:3ad01cd1303e12a1cd0fe0a8af82592c
round  5:fb06bef32b52ab8f2a4f2b6ef7f6d0cd
Key [ 9]:7dadb2efc287ce75061302904f2e7233
Key [10]:c08dcfa981e2c4272f6c7a9f52e11538
round  6:b46b711ebb3cf69e847a75f0ab884bdd
Key [11]:fc2042c708e409555e8c147660ffdfd7
Key [12]:fa0b21001af9a6b9e89e624cd99150d2
round  7:c585f308ff19404294f06b292e978994
Key [13]:18b40784ea5ba4c80ecb48694b4e9c35
Key [14]:454d54e5253c0c4a8b3fcca7db6baef4
round  8:2665fadb13acf952bf74b4ab12264b9f
Key [15]:2df37c6d9db52674f29353b0f011ed83
Key [16]:b60316733b1e8e70bd861b477e2456f1
Key [17]:884697b1baa3b7100ac537b3c95a28ac
```

Sample Data

```
round  1:158ffe43352085e8a5ec7a88e1ff2ba8
Key [ 1]:e9e5dfc1b3a79583e9e5dfc1b3a79583
Key [ 2]:7595bf57e0632c59f435c16697d4c864
round  2:0b5cc75febcdf7827ca29ec0901b6b5b
Key [ 3]:e31b96afcc75d286ef0ae257cbbc05b7
Key [ 4]:0d2a27b471bc0108c6263aff9d9b3b6b
round  3:e4278526c8429211f7f2f0016220aef4
added ->:f1b68365fd6217f952de6a89831fd95c
Key [ 5]:98d1eb5773cf59d75d3b17b3bc37c191
Key [ 6]:fd2b79282408ddd4ea0aa7511133336f
round  4:d0304ad18337f86040145d27aa5c8153
Key [ 7]:331227756638a41d57b0f7e071ee2a98
Key [ 8]:aa0dd8cc68b406533d0f1d64aabacf20
round  5:84db909d213bb0172b8b6aaf71bf1472
Key [ 9]:669291b0752e63f806fce76f10e119c8
Key [10]:ef8bdd46be8ee0277e9b78adef1ec154
round  6:f835f52921e903dfa762f1df5abd7f95
Key [11]:f3902eb06dc409cfd78384624964bf51
Key [12]:7d72702b21f97984a721c99b0498239d
round  7:ae6c0b4bb09f25c6a5d9788a31b605d1
Key [13]:532e60bceaf902c52a06c2c283ecfa32
Key [14]:181715e5192efb2a64129668cf5d9dd4
round  8:744a6235b86cc0b853cc9f74f6b65311
Key [15]:83017c1434342d4290e961578790f451
Key [16]:2603532f365604646ff65803795ccce5
Key [17]:882f7c907b565ea58dae1c928a0dcf41
sres    :056c0fe6
aco     :48afcdd4bd40fef76693b113
----------------------------------------
rand    :bc3f30689647c8d7c5a03ca80a91eceb
address :7ca89b233c2d
key     :159dd9f43fc3d328efba0cd8a861fa57
round  1:bc3f30689647c8d7c5a03ca80a91eceb
Key [ 1]:159dd9f43fc3d328efba0cd8a861fa57
Key [ 2]:326558b3c15551899a97790e65ff669e
round  2:3e950edf197615638cc19c09f8fedc9b
Key [ 3]:62e879b65b9f53bbfbd020c624b1d682
Key [ 4]:73415f30bac8ab61f410adc9442992db
round  3:6a7640791cb536678936c5ecd4ae5a73
Key [ 5]:5093cfa1d31c1c48acd76df030ea3c31
Key [ 6]:0b4acc2b8f1f694fc7bd91f4a70f3009
round  4:fca2c022a577e2ffb2aa007589693ec7
Key [ 7]:2ca43fc817947804ecff148d50d6f6c6
Key [ 8]:3fcd73524b533e00b7f7825bea2040a4
round  5:e97f8ea4ed1a6f4a36ffc179dc6bb563
Key [ 9]:6c67bec76ae8c8cc4d289f69436d3506
Key [10]:95ed95ee8cb97e61d75848464bffb379
round  6:38b07261d7340d028749de1773a415c7
Key [11]:ff566c1fc6b9da9ac502514550f3e9d2
Key [12]:ab5ce3f5c887d0f49b87e0d380e12f47
round  7:58241f1aed7c1c3e047d724331a0b774
Key [13]:a2cab6f95eac7d655dbe84a6cd4c47f5
```

```
Key [14]:f5caff88af0af8c42a20b5bbd2c8b460
round  8:3d1aaeff53c0910de63b9788b13c490f
Key [15]:185099c1131cf97001e2f36fda415025
Key [16]:a0ebb82676bc75e8378b189eff3f6b1d
Key [17]:cf5b348aaee27ae332b4f1bfa10289a6
round  1:2e4b417b9a2a9cfd7d8417d9a6a556eb
Key [ 1]:fe78b835f26468ab069fd3991b086fda
Key [ 2]:095c5a51c6fa6d3ac1d57fa19aa382bd
round  2:b8bca81d6bb45af9d92beadd9300f5ed
Key [ 3]:1af866df817fd9f4ec00bc704192cffc
Key [ 4]:f4a8a059c1f575f076f5fbb24bf16590
round  3:351aa16dec2c3a4787080249ed323eae
added ->:1b65e2167656d6bafa8c19904bd79445
Key [ 5]:8c9d18d9356a9954d341b4286e88ea1f
Key [ 6]:5c958d370102c9881bf753e69c7da029
round  4:2ce8fef47dda6a5bee74372e33e478a2
Key [ 7]:7eb2985c3697429fbe0da334bb51f795
Key [ 8]:af900f4b63a1138e2874bfb7c628b7b8
round  5:572787f563e1643c1c862b7555637fb4
Key [ 9]:834c8588dd8f3d4f31117a488420d69b
Key [10]:bc2b9b81c15d9a80262f3f48e9045895
round  6:16b4968c5d02853c3a43aa4cdb5f26ac
Key [11]:f08608c9e39ad3147cba61327919c958
Key [12]:2d4131decf4fa3a959084714a9e85c11
round  7:10e4120c7cccef9dd4ba4e6da8571b01
Key [13]:c934fd319c4a2b5361fa8eef05ae9572
Key [14]:4904c17aa47868e40471007cde3a97c0
round  8:f9081772498fed41b6ffd72b71fcf6c6
Key [15]:ea5e28687e97fa3f833401c86e6053ef
Key [16]:1168f58252c4ecfccafbdb3af857b9f2
Key [17]:b3440f69ef951b78b5cbd6866275301b
sres    :8d5205c5
aco     :3ed75df4abd9af638d144e94
----------------------------------------
rand    :0891caee063f5da1809577ff94ccdcfb
address :c62f19f6ce98
key     :45298d06e46bac21421ddfbed94c032b
round  1:0891caee063f5da1809577ff94ccdcfb
Key [ 1]:45298d06e46bac21421ddfbed94c032b
Key [ 2]:8f03e1e1fe1c191cad35a897bc400597
round  2:1c6ca013480a685c1b28e0317f7167e1
Key [ 3]:4f2ce3a092dde854ef496c8126a69e8e
Key [ 4]:968caee2ac6d7008c07283daec67f2f2
round  3:06b4915f5fcc1fc551a52048f0af8a26
Key [ 5]:ab0d5c31f94259a6bf85ee2d22edf56c
Key [ 6]:dfb74855c0085ce73dc17b84bfd50a92
round  4:077a92b040acc86e6e0a877db197a167
Key [ 7]:8f888952662b3db00d4e904e7ea53b5d
Key [ 8]:5e18bfcc07799b0132db88cd6042f599
round  5:7204881fb300914825fdc863e8ceadf3
Key [ 9]:bfca91ad9bd3d1a06c582b1d5512dddf
Key [10]:a88bc477e3fa1d5a59b5e6cf793c7a41
```

Sample Data

```
round  6:27031131d86cea2d747deb4f756143aa
Key [11]:f3cfb8dac8aea2a6a8ef95af3a2a2767
Key [12]:77beb90670c5300b03aa2b2232d3d40c
round  7:fc8c13d49149b1ce8d86f96e44a00065
Key [13]:b578373650af36a06e19fe335d726d32
Key [14]:6bcee918c7d0d24dfdf42237fcf99d53
round  8:04ef5f5a7ddf846cda0a07782fc23866
Key [15]:399f158241eb3e079f45d7b96490e7ea
Key [16]:1bcfbe98ecde2add52aa63ea79fb917a
Key [17]:ee8bc03ec08722bc2b075492873374af
round  1:d989d7a40cde7032d17b52f8117b69d5
Key [ 1]:2ecc6cc797cc41a2ab02007f6af396ae
Key [ 2]:acfaef7609c12567d537ae1cf9dc2198
round  2:8e76eb9a29b2ad5eea790db97aee37c1
Key [ 3]:079c8ff9b73d428df879906a0b87a6c8
Key [ 4]:19f2710baf403a494193d201f3a8c439
round  3:346bb7c35b2539676375aafe3af69089
added ->:edf48e675703a955b2f0fc062b71f95c
Key [ 5]:d623a6498f915cb2c8002765247b2f5a
Key [ 6]:900109093319bc30108b3d9434a77a72
round  4:fafb6c1f3ebbd2477be2da49dd923f69
Key [ 7]:e28e2ee6e72e7f4e5b5c11f10d204228
Key [ 8]:8e455cd11f8b9073a2dfa5413c7a4bc5
round  5:7c72230df588060a3cf920f9b0a08f06
Key [ 9]:28afb26e2c7a64238c41cefc16c53e74
Key [10]:d08dcafc2096395ba0d2dddd0e471f4d
round  6:55991df991db26ff00073a12baa3031d
Key [11]:fcffdcc3ad8faae091a7055b934f87c1
Key [12]:f8df082d77060252c02d91e55bd6a7d6
round  7:70ec682ff864375f63701fa4f6be5377
Key [13]:bef3706e523d708e8a44147d7508bc35
Key [14]:3e98ab283ca2422d56a56cf8b06caeb3
round  8:172f12ec933da85504b4ea5c90f8f0ea
Key [15]:87ad9625d06645d22598dd5ef811ea2c
Key [16]:8bd3db0cc8168009e5da90877e13a36f
Key [17]:0e74631d813a8351ac7039b348c41b42
sres    :00507e5f
aco     :2a5f19fbf60907e69f39ca9f
----------------------------------------
rand    :0ecd61782b4128480c05dc45542b1b8c
address :f428f0e624b3
key     :35949a914225fabad91995d226de1d92
round  1:0ecd61782b4128480c05dc45542b1b8c
Key [ 1]:35949a914225fabad91995d226de1d92
Key [ 2]:ea6b3dcccc8ee5d88de349fa5010404f
round  2:8935e2e263fbc4b9302cabdfc06bce3e
Key [ 3]:920f3a0f2543ce535d4e7f25ad80648a
Key [ 4]:ad47227edf9c6874e80ba80ebb95d2c9
round  3:b4c8b878675f184a0c72f3dab51f8f05
Key [ 5]:81a941ca7202b5e884ae8fa493ecac3d
Key [ 6]:bcde1520bee3660e86ce2f0fb78b9157
round  4:77ced9f2fc42bdd5c6312b87fc2377c5
```

Sample Data

```
Key [ 7]:c8eee7423d7c6efa75ecec0d2cd969d3
Key [ 8]:910b3f838a02ed441fbe863a02b4a1d0
round  5:fe28e8056f3004d60bb207e628b39cf2
Key [ 9]:56c647c1e865eb078348962ae070972d
Key [10]:883965da77ca5812d8104e2b640aec0d
round  6:1f2ba92259d9e88101518f145a33840f
Key [11]:61d4cb7e4f8868a283327806a9bd8d4d
Key [12]:9f57de3a3ff310e21dc1e696ce060304
round  7:cc9b5d0218d29037e88475152ebebb2f
Key [13]:7aa1d8adc1aeed7127ef9a18f6eb2d8e
Key [14]:b4db9da3bf865912acd14904c7f7785d
round  8:b04d352bedc02682e4a7f59d7cda1dba
Key [15]:a13d7141ef1f6c7d867e3d175467381b
Key [16]:08b2bc058e50d6141cdd566a307e1acc
Key [17]:057b2b4b4be5dc0ac49e50489b8006c9
round  1:5cfacc773bae995cd7f1b81e7c9ec7df
Key [ 1]:1e717950f5828f3930fe4a9395858815
Key [ 2]:d1623369b733d98bbc894f75866c544c
round  2:d571ffa21d9daa797b1a0a3c962fc64c
Key [ 3]:4abf27664ae364cc8a7e5bcf88214cc4
Key [ 4]:2aaedda8dc4933dd6aeaf6e5c0d5a482
round  3:e17c8e498a00f125bf654c938c23f36d
added ->:bd765a3eb1ae8a796856048df0c1bab2
Key [ 5]:bc7f8ab2d86000f47b1946cc8d7a7a2b
Key [ 6]:6b28544cb13ec6c5d98470df2cf900b7
round  4:a9727c26f2f06bd9920e83c8605dcd76
Key [ 7]:1be840d9107f2c9523f66bb19f5464a1
Key [ 8]:61d6fb1aa2f0c2b26fb2a3d6de8c177c
round  5:aeff751f146eab7e4626b2e2c9e2fb39
Key [ 9]:adabfc82570c568a233173099f23f4c2
Key [10]:b7df6b55ad266c0f1ff7452101f59101
round  6:cf412b95f454d5185e67ca671892e5bd
Key [11]:8e04a7282a2950dcbaea28f300e22de3
Key [12]:21362c114433e29bda3e4d51f803b0cf
round  7:16165722fe4e07ef88f8056b17d89567
Key [13]:710c8fd5bb3cbb5f132a7061de518bd9
Key [14]:0791de7334f4c87285809343f3ead3bd
round  8:28854cd6ad4a3c572b15490d4b81bc3f
Key [15]:4f47f0e5629a674bfcd13770eb3a3bd9
Key [16]:58a6d9a16a284cc0aead2126c79608a1
Key [17]:a564082a0a98399f43f535fd5cefad34
sres    :80e5629c
aco     :a6fe4dcde3924611d3cc6ba1


========================================
```

9.2 FOUR TESTS OF E21

```
rand    :00000000000000000000000000000000
address :000000000000
round  1:00000000000000000000000000000000
Key [ 1]:00000000000000000000000000000006
Key [ 2]:4697b1baa3b7100ac537b3c95a28dc94
round  2:98611307ab76bbde9a86af1ce8cad412
Key [ 3]:ecabaac66795580df89af66e665d863d
Key [ 4]:8ac3d8896ae9364943bfebd4a2a768a0
round  3:820999ad2e6618f4b578974beeedf9e7
added ->:820999ad2e6618f4b578974beeedf9e7
Key [ 5]:5d57921fd5715cbb22c1bedb1c996394
Key [ 6]:2a61b8343219fdfb1740e9541d41448f
round  4:acd6edec87581ac22dbdc64ea4ced3a2
Key [ 7]:dd0480dee731d67f01ba0f39da6f23ca
Key [ 8]:3ad01cd1303e12a18dcfe0a8af82592c
round  5:1c7798732f09fbfe25795a4a2fbc93c2
Key [ 9]:7dadb2efc287ce7b0c1302904f2e7233
Key [10]:c08dcfa981e2f4572f6c7a9f52e11538
round  6:c05b88b56aa70e9c40c79bb81cd911bd
Key [11]:fc2042c708658a555e8c147660ffdfd7
Key [12]:fa0b21002605a6b9e89e624cd99150d2
round  7:abacc71b481c84c798d1bdf3d62f7e20
Key [13]:18b407e44a5ba4c80ecb48694b4e9c35
Key [14]:454d57e8253c0c4a8b3fcca7db6baef4
round  8:e8204e1183ae85cf19edb2c86215b700
Key [15]:2d0b946d9db52674f29353b0f011ed83
Key [16]:76c316733b1e8e70bd861b477e2456f1
Key [17]:8e4697b1baa3b7100ac537b3c95a28ac
Ka      :d14ca028545ec262cee700e39b5c39ee
----------------------------------------
rand    :2dd9a550343191304013b2d7e1189d09
address :cac4364303b6
round  1:cac4364303b6cac4364303b6cac43643
Key [ 1]:2dd9a550343191304013b2d7e1189d0f
Key [ 2]:14c4335b2c43910c5dcc71d81a14242b
round  2:e169f788aad45a9011f11db5270b1277
Key [ 3]:55bfb712cba168d1a48f6e74cd9f4388
Key [ 4]:2a2b3aacca695caef2821b0fb48cc253
round  3:540f9c76652e92c44987c617035037bf
added ->:9ed3d23566e45c007fcac9a1c9146dfc
Key [ 5]:a06aab22d9a287384042976b4b6b00ee
Key [ 6]:c229d054bb72e8eb230e6dcdb32d16b7
round  4:83659a41675f7171ea57909dc5a79ab4
Key [ 7]:23c4812ab1905ddf77dedaed4105649a
Key [ 8]:40d87e272a7a1554ae2e85e3638cdf52
round  5:0b9382d0ed4f2fccdbb69d0db7b130a4
Key [ 9]:bdc064c6a39f6b84fe40db359f62a3c4
Key [10]:58228db841ce3cee983aa721f36aa1b9
round  6:c6ebda0f8f489792f09c189568226c1f
Key [11]:a815bacd6fa747a0d4f52883ac63ebe7
```

Sample Data

```
Key [12]:a9ce513b38ea006c333ecaaefcf1d0f8
round  7:75a8aba07e69c9065bcd831c40115116
Key [13]:3635e074792d4122130e5b824e52cd60
Key [14]:511bdb61bb28de72a5d794bffbf407df
round  8:57a6e279dcb764cf7dd6a749dd60c735
Key [15]:a32f5f21044b6744b6d913b13cdb4c0a
Key [16]:9722bbaeef281496ef8c23a9d41e92f4
Key [17]:807370560ad7e8a13a054a65a03b4049
Ka      :e62f8bac609139b3999aedbc9d228042
----------------------------------------
rand    :dab3cffe9d5739d1b7bf4a667ae5ee24
address :02f8fd4cd661
round  1:02f8fd4cd66102f8fd4cd66102f8fd4c
Key [ 1]:dab3cffe9d5739d1b7bf4a667ae5ee22
Key [ 2]:e315a8a65d809ec7c289e69c899fbdcc
round  2:ef85ff081b8709405e19f3e275cec7dc
Key [ 3]:df6a119bb50945fc8a3394e7216448f3
Key [ 4]:87fe86fb0d58b5dd0fb3b6b1dab51d07
round  3:aa25c21bf577d92dd97381e3e9edcc54
added ->:a81dbf5723d8dbd524bf5782ebe5c918
Key [ 5]:36cc253c506c0021c91fac9d8c469e90
Key [ 6]:d5fda00f113e303809b7f7d78a1a2b0e
round  4:9e69ce9b53caec3990894d2baed41e0d
Key [ 7]:c14b5edc10cabf16bc2a2ba4a8ae1e40
Key [ 8]:74c6131afc8dce7e11b03b1ea8610c16
round  5:a5460fa8cedca48a14fd02209e01f02e
Key [ 9]:346cfc553c6cbc9713edb55f4dcbc96c
Key [10]:bddf027cb059d58f0509f8963e9bdec6
round  6:92b33f11eadcacc5a43dd05f13d334dd
Key [11]:8eb9e040c36c4c0b4a7fd3dd354d53c4
Key [12]:c6ffecdd5e135b20879b9dfa4b34bf51
round  7:fb0541aa5e5df1a61c51aef606eb5a41
Key [13]:bf12f5a6ba08dfc4fda4bdfc68c997d9
Key [14]:37c4656b9215f3c959ea688fb64ad327
round  8:f0bbd2b94ae374346730581fc77a9c98
Key [15]:e87bb0d86bf421ea4f779a8eee3a866c
Key [16]:faa471e934fd415ae4c0113ec7f0a5ad
Key [17]:95204a80b8400e49db7cf6fd2fd40d9a
Ka      :b0376d0a9b338c2e133c32b69cb816b3
----------------------------------------
rand    :13ecad08ad63c37f8a54dc56e82f4dc1
address :9846c5ead4d9
round  1:9846c5ead4d99846c5ead4d99846c5ea
Key [ 1]:13ecad08ad63c37f8a54dc56e82f4dc7
Key [ 2]:ad04f127bed50b5e671d6510d392eaed
round  2:97374e18cdd0a6f7a5aa49d1ac875c84
Key [ 3]:57ad159e5774fa222f2f3039b9cd5101
Key [ 4]:9a1e9e1068fede02ef90496e25fd8e79
round  3:9dd3260373edd9d5f4e774826b88fd2d
added ->:0519ebe9a7c6719331d1485bf3cec2c7
Key [ 5]:378dce167db62920b0b392f7cfca316e
Key [ 6]:db4277795c87286faee6c9e9a6b71a93
```

```
round  4:40ec6563450299ac4e120d88672504d6
Key [ 7]:ec01aa2f5a8a793b36c1bb858d254380
Key [ 8]:2921a66cfa5bf74ac535424564830e98
round  5:57287bbb041bd6a56c2bd931ed410cd4
Key [ 9]:07018e45aab61b3c3726ee3d57dbd5f6
Key [10]:627381f0fa4c02b0c7d3e7dfbffc3333
round  6:66affa66a8dcd36e36bf6c3f1c6a276e
Key [11]:33b57c925bd5551999f716e138efbe79
Key [12]:a6dc7f9aa95bcc9243aebd12608f657a
round  7:450e65184fd8c72c578d5cdecb286743
Key [13]:a6a6db00fd8c72a28ea57ea542f6e102
Key [14]:dcf3377daeb2e24e61f0ad6620951c1f
round  8:e5eb180b519a4e673f21b7c4f4573f3d
Key [15]:621240b9506b462a7fa250da41844626
Key [16]:ae297810f01f43dc35756cd119ee73d6
Key [17]:b959835ec2501ad3894f8b8f1f4257f9
Ka      :5b61e83ad04d23e9d1c698851fa30447
========================================
```

9.3 THREE TESTS OF E22

(for K_master and overlay generation)

```
rand    :001de169248850245a5f7cc7f0d6d633
PIN     :d5a51083a04a1971f18649ea8b79311a
round  1:001de169248850245a5f7cc7f0d6d623
Key [ 1]:d5a51083a04a1971f18649ea8b79311a
Key [ 2]:7317cdbff57f9b99f9810a2525b17cc7
round  2:5f05c143347b59acae3cb002db23830f
Key [ 3]:f08bd258adf1d4ae4a54d8ccb26220b2
Key [ 4]:91046cbb4ccc43db18d6dd36ca7313eb
round  3:c8f3e3300541a25b6ac5a80c3105f3c4
added ->:c810c45921c9f27f302424cbc1dbc9e7
Key [ 5]:67fb2336f4d9f069da58d11c82f6bd95
Key [ 6]:4fed702c75bd72c0d3d8f38707134c50
round  4:bd5e0c3a97fa55b91a3bbbf306ebb978
Key [ 7]:41c947f80cdc0464c50aa89070af314c
Key [ 8]:680eecfa8daf41c7109c9a5cb1f26d75
round  5:21c1a762c3cc33e75ce8976a73983087
Key [ 9]:6e33fbd94d00ff8f72e8a7a0d2cebc4c
Key [10]:f4d726054c6b948add99fabb5733ddc3
round  6:56d0df484345582f6b574a449ba155eb
Key [11]:4eda2425546a24cac790f49ef2453b53
Key [12]:cf2213624ed1510408a5a3e00b7333df
round  7:120cf9963fe9ff22993f7fdf9600d9b8
Key [13]:d04b1a25b0b8fec946d5ecfa626d04c9
Key [14]:01e5611b0f0e140bdb64585fd3ae5269
round  8:a6337400ad8cb47fefb91332f5cb2713
Key [15]:f15b2dc433f534f61bf718770a3698b1
Key [16]:f990d0273d8ea2b9e0b45917a781c720
Key [17]:f41b3cc13d4301297bb6bdfcb3e5a1dd
Ka      :539e4f2732e5ae2de1e0401f0813bd0d
```

Sample Data

```
----------------------------------------
rand    :67ed56bfcf99825f0c6b349369da30ab
PIN     :7885b515e84b1f082cc499976f1725ce
round  1:67ed56bfcf99825f0c6b349369da30bb
Key [ 1]:7885b515e84b1f082cc499976f1725ce
Key [ 2]:72445901fdaf506beb036f4412512248
round  2:6b160b66a1f6c26c1f3432f463ef5aa1
Key [ 3]:59f0e4982e97633e5e7fd133af8f2c5b
Key [ 4]:b4946ec77a41bf7c729d191e33d458ab
round  3:3f22046c964c3e5ca2a26ec9a76a9f67
added ->:580f5ad359e5c003ae0da25ace44cfdc
Key [ 5]:eb0b839f97bdf534183210678520bbef
Key [ 6]:cff0bc4a94e5c8b2a2d24d9f59031e19
round  4:87aa61fc0ff88e744c195249b9a33632
Key [ 7]:592430f14d8f93db95dd691af045776d
Key [ 8]:3b55b404222bf445a6a2ef5865247695
round  5:83dcf592a854226c4dcd94e1ecf1bc75
Key [ 9]:a9714b86319ef343a28b87456416bd52
Key [10]:e6598b24390b3a0bf2982747993b0d78
round  6:dee0d13a52e96bcf7c72045a21609fc6
Key [11]:62051d8c51973073bff959b032c6e1e2
Key [12]:29e94f4ab73296c453c833e217a1a85b
round  7:08488005761e6c7c4dbb203ae453fe3a
Key [13]:0e255970b3e2fc235f59fc5acb10e8ce
Key [14]:d0dfbb3361fee6d4ffe45babf1cd7abf
round  8:0d81e89bddde7a7065316c47574feb8f
Key [15]:c12eee4eb38b7a171f0f736003774b40
Key [16]:8f962523f1c0abd9a087a0dfb11643d3
Key [17]:24be1c66cf8b022f12f1fb4c60c93fd1
Ka      :04435771e03a9daceb8bb1a493ee9bd8
----------------------------------------
rand    :40a94509238664f244ff8e3d13b119d3
PIN     :1ce44839badde30396d03c4c36f23006
round  1:40a94509238664f244ff8e3d13b119c3
Key [ 1]:1ce44839badde30396d03c4c36f23006
Key [ 2]:6dd97a8f91d628be4b18157af1a9dcba
round  2:0eac5288057d9947a24eabc1744c4582
Key [ 3]:fef9583d5f55fd4107ad832a725db744
Key [ 4]:fc3893507016d7c1db2bd034a230a069
round  3:60b424f1082b0cc3bd61be7b4c0155f0
added ->:205d69f82bb17031f9604c465fb26e33
Key [ 5]:0834d04f3e7e1f7f85f0c1db685ab118
Key [ 6]:1852397f9a3723169058e9b62bb3682b
round  4:2c6b65a49d66af6566675afdd6fa7d7d
Key [ 7]:6c10da21d762ae4ac1ba22a96d9007b4
Key [ 8]:9aa23658b90470a78d686344b8a9b0e7
round  5:a2c537899665113a42f1ac24773bdc31
Key [ 9]:137dee3bf879fe7bd02fe6d888e84f16
Key [10]:466e315a1863f47d0f93bc6827cf3450
round  6:e26982980d79b21ed3e20f8c3e71ba96
Key [11]:0b33cf831465bb5c979e6224d7f79f7c
Key [12]:92770660268ede827810d707a0977d73
```

```
round  7:e7b063c4e2e3110b89b7e1631c762dd5
Key [13]:7be30ae4961cf24ca17625a77bb7a9f8
Key [14]:be65574a33ae30e6e82dbd2826d3cc1a
round  8:7a963e37b2c2e76b489cfe40a2cf00e5
Key [15]:ed0ba7dd30d60a5e69225f0a33011e5b
Key [16]:765c990f4445e52b39e6ed6105ad1c4f
Key [17]:52627bf9f35d94f30d5b07ef15901adc
Ka      :9cde4b60f9b5861ed9df80858bac6f7f


========================================
```

9.4 TESTS OF E22 WITH PIN AUGMENTING

for PIN lengths 1,...,16 bytes

```
rand    :24b101fd56117d42c0545a4247357048
PIN length =16 octets
PIN     :fd397c7f5c1f937cdf82d8816cc377e2
round  1:24b101fd56117d42c0545a4247357058
Key [ 1]:fd397c7f5c1f937cdf82d8816cc377e2
Key [ 2]:0f7aac9c9b53f308d9fdbf2c78e3c30e
round  2:838edfe1226266953ccba8379d873107
Key [ 3]:0b8ac18d4bb44fad2efa115e43945abc
Key [ 4]:887b16b062a83bfa469772c25b456312
round  3:8cd0c9283120aba89a7f9d635dd4fe3f
added ->:a881cad5673128ea5ad3f7211a096e67
Key [ 5]:2248cbe6d299e9d3e8fd35a91178f65b
Key [ 6]:b92af6237385bd31f8fb57fb1bdd824e
round  4:2648d9c618a622b10ef80c4dbaf68b99
Key [ 7]:2bf5ffe84a37878ede2d4c30be60203b
Key [ 8]:c9cb6cec60cb8a8f29b99fcf3e71e40f
round  5:b5a7d9e96f68b14ccebf361de3914d0f
Key [ 9]:5c2f8a702e4a45575b103b0cce8a91c6
Key [10]:d453db0c9f9ddbd11e355d9a34d9b11b
round  6:632a091e7eefe1336857ddafd1ff3265
Key [11]:32805db7e59c5ed4acabf38d27e3fece
Key [12]:fde3a8eedfa3a12be09c1a8a00890fd7
round  7:048531e9fd3efa95910540150f8b137b
Key [13]:def07eb23f3a378f059039a2124bc4c2
Key [14]:2608c58f23d84a09b9ce95e5caac1ab4
round  8:461814ec7439d412d0732f0a6f799a6a
Key [15]:0a7ed16481a623e56ee1442ffa74f334
Key [16]:12add59aca0d19532f1516979954e369
Key [17]:dd43d02d39ffd6a386a4b98b4ac6eb23
Ka      :a5f2adf328e4e6a2b42f19c8b74ba884
----------------------------------------
rand    :321964061ac49a436f9fb9824ac63f8b
PIN length =15 octets
PIN     :ad955d58b6b8857820ac1262d617a6
address :0314c0642543
round  1:321964061ac49a436f9fb9824ac63f9b
```

Sample Data

```
Key [ 1]:ad955d58b6b8857820ac1262d617a603
Key [ 2]:f281736f68e3d30b2ac7c67f125dc416
round  2:7c4a4ece1398681f4bafd309328b7770
Key [ 3]:43c157f4c8b360387c32ab330f9c9aa8
Key [ 4]:3a3049945a298f6d076c19219c47c3cb
round  3:9672b00738bdfaf9bd92a855bc6f3afb
added ->:a48b1401228194bad23161d7f6357960
Key [ 5]:c8e2eaa6d73b7de18f3228ab2173bc69
Key [ 6]:8623f44488222e66a293677cf30bf2bb
round  4:9b30247aad3bf133712d034b46d21c68
Key [ 7]:f3e500902fba31db9bae50ef30e484a4
Key [ 8]:49d4b1137c18f4752dd9955a5a8d2f43
round  5:4492c25fda08083a768b4b5588966b23
Key [ 9]:9d59c451989e74785cc097eda7e42ab8
Key [10]:251de25f3917dcd99c18646107a641fb
round  6:21ae346635714d2623041f269978c0ee
Key [11]:80b8f78cb1a49ec0c3e32a238e60fddf
Key [12]:beb84f4d20a501e4a24ecfbde481902b
round  7:9b56a3d0f8932f20c6a77a229514fb00
Key [13]:852571b44f35fd9d9336d3c1d2506656
Key [14]:d0a0d510fb06ba76e69b8ee3ebc1b725
round  8:6cd8492b2fd31a86978bcdf644eb08a8
Key [15]:c7ffd523f32a874ed4a93430a25976de
Key [16]:16cdcb25e62964876d951fdcc07030d3
Key [17]:def32c0e12596f9582e5e3c52b303f52
Ka      :c0ec1a5694e2b48d54297911e6c98b8f
----------------------------------------
rand    :d4ae20c80094547d7051931b5cc2a8d6
PIN length =14 octets
PIN     :e1232e2c5f3b833b3309088a87b6
address :fabecc58e609
round  1:d4ae20c80094547d7051931b5cc2a8c6
Key [ 1]:e1232e2c5f3b833b3309088a87b6fabe
Key [ 2]:5f0812b47cd3e9a30d7707050fffa1f2
round  2:1f45f16be89794bef33e4547c9c0916a
Key [ 3]:77b681944763244ffa3cd71b248b79b5
Key [ 4]:e2814e90e04f485958ce58c9133e2be6
round  3:b10d2f4ac941035263cee3552d774d2f
added ->:65bb4f82c9d5572f131f764e7139f5e9
Key [ 5]:520acad20801dc639a2c6d66d9b79576
Key [ 6]:c72255cdb61d42be72bd45390dd25ba5
round  4:ead4dc34207b6ea721c62166e155aaad
Key [ 7]:ebf04c02075bf459ec9c3ec06627d347
Key [ 8]:a1363dd2812ee800a4491c0c74074493
round  5:f507944f3018e20586d81d7f326aae9d
Key [ 9]:b0b6ba79493dc833d7f425be7b8dadb6
Key [10]:08cd23e536b9b9b53e85eb004cba3111
round  6:fff450f4302a2b3571e8405e148346da
Key [11]:fec22374c6937dcd26171f4d2edfada3
Key [12]:0f1a8ef5979c69ff44f620c2e007b6e4
round  7:de558779589897f3402a90ee78c3f921
Key [13]:901fb66f0779d6aad0c0fba1fe812cb5
```

Sample Data

```
Key [14]:a0cab3cd15cd23603adc8d4474efb239
round  8:b2df0aa0c9f07fbbaa02f510a29cf540
Key [15]:18edc3f4296dd6f1dea13f7c143117a1
Key [16]:8d3d52d700a379d72ded81687f7546c7
Key [17]:5927badfe602f29345f840bb53e1dea6
Ka      :d7b39be13e3692c65b4a9e17a9c55e17
----------------------------------------
rand    :272b73a2e40db52a6a61c6520549794a
PIN length =13 octets
PIN     :549f2694f353f5145772d8ae1e
address :20487681eb9f
round  1:272b73a2e40db52a6a61c6520549795a
Key [ 1]:549f2694f353f5145772d8ae1e204876
Key [ 2]:42c855593d66b0c458fd28b95b6a5fbf
round  2:d7276dc8073f7677c31f855bde9501e2
Key [ 3]:75d0a69ae49a2da92e457d767879df52
Key [ 4]:b3aa7e7492971afaa0fb2b64827110df
round  3:71aae503831133d19bc452da4d0e409b
added ->:56d558a1671ee8fbf12518884857b9c1
Key [ 5]:9c8cf1604a98e9a503c342e272de5cf6
Key [ 6]:d35bc2df6b85540a27642106471057d9
round  4:f41a709c89ea80481aa3d2b9b2a9f8ca
Key [ 7]:b454dda74aeb4eff227ba48a58077599
Key [ 8]:bcba6aec050116aa9b7c6a9b7314d796
round  5:20fdda20f4a26b1bd38eb7f355a7be87
Key [ 9]:d41f8a9de0a716eb7167a1b6e321c528
Key [10]:5353449982247782d168ab43f17bc4d8
round  6:a70e316997eeed49a5a9ef9ba5e913b5
Key [11]:32cbc9cf1a81e36a45153972347ce4ac
Key [12]:5747619006cf4ef834c749f2c4b9feb6
round  7:e66f2317a825f589f76b47b6aa6e73fb
Key [13]:f9b68beba0a09d2a570a7dc88cc3c3c2
Key [14]:55718f9a4f0b1f9484e8c6b186a41a4b
round  8:5f68f940440a9798e074776019804ada
Key [15]:4ecc29be1b4d78433f6aa30db974a7fb
Key [16]:8470a066ffb00cda7b08059599f919f5
Key [17]:f39a36d74e960a051e1ca98b777848f4
Ka      :9ac64309a37c25c3b4a584fc002a1618
----------------------------------------
rand    :7edb65f01a2f45a2bc9b24fb3390667e
PIN length =12 octets
PIN     :2e5a42797958557b23447ca8
address :04f0d2737f02
round  1:7edb65f01a2f45a2bc9b24fb3390666e
Key [ 1]:2e5a42797958557b23447ca804f0d273
Key [ 2]:18a97c856561eb23e71af8e9e1be4799
round  2:3436e12db8ffdc1265cb5a86da2fed0b
Key [ 3]:7c0908dcbc73201e17c4f7aa1ab8aec8
Key [ 4]:7cb58833602fbe4194c7cc797ce8c454
round  3:caed6af4226f67e4ad1914620803ef2a
added ->:b4c8cf04389eac4611b438993b935544
Key [ 5]:f4dce7d607b5234562d0ebb2267b08b8
```

```
Key [ 6]:560b75c5545751fd8fa99fa4346e654b
round  4:ee67c87d6f74bb75db98f68bff0192c1
Key [ 7]:32f10cefd8d3e6424c6f91f1437808af
Key [ 8]:a934a46045be30fb3be3a5f3f7b18837
round  5:792398dcbeb8d10bdb07ae3c819e943c
Key [ 9]:a0f12e97c677a0e8ac415cd2c8a7ca88
Key [10]:e27014c908785f5ca03e8c6a1da3bf13
round  6:e778b6e0c3e8e7edf90861c7916d97a8
Key [11]:1b4a4303bcc0b2e0f41c72d47654bd9f
Key [12]:4b1302a50046026d6c9054fc8387965a
round  7:1fafddc7efa5f04c1dec1869d3f2d9bb
Key [13]:58c334bb543d49eca562cdbe0280e0fc
Key [14]:bdb60d383c692d06476b76646c8dec48
round  8:3d7c326d074bd6aa222ea050f04a3c7f
Key [15]:78c0162506be0b5953e8403c01028f93
Key [16]:24d7dbbe834dbd7b67f57fcf0d39d60f
Key [17]:2e74f1f3331c0f6585e87b2f715e187e
Ka      :d3af4c81e3f482f062999dee7882a73b
----------------------------------------
rand    :26a92358294dce97b1d79ec32a67e81a
PIN length =11 octets
PIN     :05fbad03f52fa9324f7732
address :b9ac071f9d70
round  1:26a92358294dce97b1d79ec32a67e80a
Key [ 1]:05fbad03f52fa9324f7732b9ac071f9d
Key [ 2]:2504c9691c04a18480c8802e922098c0
round  2:0be20e3d76888e57b6bf77f97a8714fb
Key [ 3]:576b2791d1212bea8408212f2d43e77e
Key [ 4]:90ae36dcce8724adb618f912d1b27297
round  3:1969667060764453257d906b7e58bd5b
added ->:3f12892849c312c494542ea854bfa551
Key [ 5]:bc492c42c9e87f56ec31af5474e9226e
Key [ 6]:c135d1dbed32d9519acfb4169f3e1a10
round  4:ac404205118fe771e54aa6f392da1153
Key [ 7]:83ccbdbbaf17889b7d18254dc9252fa1
Key [ 8]:80b90a1767d3f2848080802764e21711
round  5:41795e89ae9a0cf776ffece76f47fd7a
Key [ 9]:cc24e4a86e8eed129118fd3d5223a1dc
Key [10]:7b1e9c0eb9dab083574be7b7015a62c9
round  6:29ca9e2f87ca00370ef1633505bfba4b
Key [11]:888e6d88cf4beb965cf7d4f32b696baa
Key [12]:6d642f3e5510b0b043a44daa2cf5eec0
round  7:81fc891c3c6fd99acc00028a387e2366
Key [13]:e224f85da2ab63a23e2a3a036e421358
Key [14]:c8dc22aaa739e2cb85d6a0c08226c7d0
round  8:e30b537e7a000e3d2424a9c0f04c4042
Key [15]:a969aa818c6b324bae391bedcdd9d335
Key [16]:6974b6f2f07e4c55f2cc0435c45bebd1
Key [17]:134b925ebd98e6b93c14aee582062fcb
Ka      :be87b44d079d45a08a71d15208c5cb50
----------------------------------------
rand    :0edef05327eab5262430f21fc91ce682
```

Sample Data

```
PIN length =10 octets
PIN     :8210e47390f3f48c32b3
address :7a3cdfe377d1
round  1:0edef05327eab5262430f21fc91ce692
Key [ 1]:8210e47390f3f48c32b37a3cdfe377d1
Key [ 2]:c6be4c3e425e749b620a94c779e33a7e
round  2:07ca3c7a7a6bcbc31d79a856d9cffc0e
Key [ 3]:2587cec2a4b8e4f996a9ed664350d5dd
Key [ 4]:70e4bf72834d9d3dbb7eb2c239216dc0
round  3:792ad2ac4e4559d1463714d2f161b6f4
added ->:7708c2ff692f0ef7626706cd387d9c66
Key [ 5]:6696e1e7f8ac037e1fff3598f0c164e2
Key [ 6]:23dbfe4d0b561bea08fbcef25e49b648
round  4:7d8c71a9d7fbdcbd851bdf074550b100
Key [ 7]:b03648acd021550edee904431a02f00c
Key [ 8]:cb169220b7398e8f077730aa4bf06baa
round  5:b6fcaa45064ffd557e4b7b30cfbb83e0
Key [ 9]:af602c2ba16a454649951274c2be6527
Key [10]:5d60b0a7a09d524143eca13ad680bc9c
round  6:b3416d391a0c26c558843debd0601e9e
Key [11]:9a2f39bfe558d9f562c5f09a5c3c0263
Key [12]:72cae8eebd7fabd9b1848333c2aab439
round  7:abe4b498d9c36ea97b8fd27d7f813913
Key [13]:15f27ea11e83a51645d487b81371d7dc
Key [14]:36083c8666447e03d33846edf444eb12
round  8:8032104338a945ba044d102eabda3b22
Key [15]:0a3a8977dd48f3b6c1668578befadd02
Key [16]:f06b6675d78ca0ee5b1761bdcdab516d
Key [17]:cbc8a7952d33aa0496f7ea2d05390b23
Ka      :bf0706d76ec3b11cce724b311bf71ff5
----------------------------------------
rand    :86290e2892f278ff6c3fb917b020576a
PIN length = 9 octets
PIN     :3dcdffcfd086802107
address :791a6a2c5cc3
round  1:86290e2892f278ff6c3fb917b0205765
Key [ 1]:3dcdffcfd086802107791a6a2c5cc33d
Key [ 2]:b4962f40d7bb19429007062a3c469521
round  2:1ec59ffd3065f19991872a7863b0ef02
Key [ 3]:eb9ede6787dd196b7e340185562bf28c
Key [ 4]:2964e58aacf7287d1717a35b100ae23b
round  3:f817406f1423fc2fe33e25152679eaaf
added ->:7e404e47861574d08f7dde02969941ca
Key [ 5]:6abf9a314508fd61e486fa4e376c3f93
Key [ 6]:6da148b7ee2632114521842cbb274376
round  4:e9c2a8fac22b8c7cf0c619e2b3f890ed
Key [ 7]:df889cc34fda86f01096d52d116e620d
Key [ 8]:5eb04b147dc39d1974058761ae7b73fc
round  5:444a8aac0efee1c02f8d38f8274b7b28
Key [ 9]:8426cc59eee391b2bd50cf8f1efef8b3
Key [10]:8b5d220a6300ade418da791dd8151941
round  6:9185f983db150b1bccab1e5c12eb63a1
```

```
Key [11]:82ba4ddef833f6a4d18b07aa011f2798
Key [12]:ce63d98794682054e73d0359dad35ec4
round  7:5eded2668f5916dfd036c09e87902886
Key [13]:da794357652e80c70ad8b0715dbe33d6
Key [14]:732ef2c0c3220b31f3820c375e27bb29
round  8:88a5291b4acbba009a85b7dd6a834b3b
Key [15]:3ce75a61d4b465b70c95d7ccd5799633
Key [16]:5df9bd2c3a17a840cdaafb76c171db7c
Key [17]:3f8364b089733d902bccb0cd3386846f
Ka      :cdb0cc68f6f6fbd70b46652de3ef3ffb
----------------------------------------
rand    :3ab52a65bb3b24a08eb6cd284b4b9d4b
PIN length = 8 octets
PIN     :d0fb9b6838d464d8
address :25a868db91ab
round  1:3ab52a65bb3b24a08eb6cd284b4b9d45
Key [ 1]:d0fb9b6838d464d825a868db91abd0fb
Key [ 2]:2573f47b49dad6330a7a9155b7ae8ba1
round  2:ad2ffdff408fcfab44941016a9199251
Key [ 3]:d2c5b8fb80cba13712905a589adaee71
Key [ 4]:5a3381511b338719fae242758dea0997
round  3:2ddc17e570d7931a2b1d13f6ace928a5
added ->:17914180cb12b7baa5d3e0dee734c5e0
Key [ 5]:e0a4d8ac27fbe2783b7bcb3a36a6224d
Key [ 6]:949324c6864deac3eca8e324853e11c3
round  4:62c1db5cf31590d331ec40ad692e8df5
Key [ 7]:6e67148088a01c2d4491957cc9ddc4aa
Key [ 8]:557431deab7087bb4c03fa27228f60c6
round  5:9c8933bc361f4bde4d1bda2b5f8bb235
Key [ 9]:a2551aca53329e70ade3fd2bb7664697
Key [10]:05d0ad35de68a364b54b56e2138738fe
round  6:9156db34136aa06655bf28a05be0596a
Key [11]:1616a6b13ce2f2895c722e8495181520
Key [12]:b12e78a1114847b01f6ed2f5a1429a23
round  7:84dcc292ed836c1c2d523f2a899a2ad5
Key [13]:316e144364686381944e95afd8a026bb
Key [14]:1ab551b88d39d97ea7a9fe136dbfe2e1
round  8:87bdcac878d777877f4eccf042cfee5e
Key [15]:70e21ab08c23c7544524b64492b25cc9
Key [16]:35f730f2ae2b950a49a1bf5c8b9f8866
Key [17]:2f16924c22db8b74e2eadf1ba4ebd37c
Ka      :983218718ca9aa97892e312d86dd9516
----------------------------------------
rand    :a6dc447ff08d4b366ff96e6cf207e179
PIN length = 7 octets
PIN     :9c57e10b4766cc
address :54ebd9328cb6
round  1:a6dc447ff08d4b366ff96e6cf207e174
Key [ 1]:9c57e10b4766cc54ebd9328cb69c57e1
Key [ 2]:00a609f4d61db26993c8177e3ee2bba8
round  2:1ed26b96a306d7014f4e5c9ee523b73d
Key [ 3]:646d7b5f9aaa528384bda3953b542764
```

Sample Data

```
Key [ 4]:a051a42212c0e9ad5c2c248259aca14e
round  3:a53f526db18e3d7d53edbfc9711041ed
added ->:031b9612411b884b3ce62da583172299
Key [ 5]:d1bd5e64930e7f838d8a33994462d8b2
Key [ 6]:5dc7e2291e32435665ebd6956bec3414
round  4:9438be308ec83f35c560e2796f4e0559
Key [ 7]:10552f45af63b0f15e2919ab37f64fe7
Key [ 8]:c44d5717c114a58b09207392ebe341f8
round  5:b79a7b14386066d339f799c40479cb3d
Key [ 9]:6886e47b782325568eaf59715a75d8ff
Key [10]:8e1e335e659cd36b132689f78c147bda
round  6:ef232462228aa166438d10c34e17424b
Key [11]:8843efeedd5c2b7c3304d647f932f4d1
Key [12]:13785aaedd0adf67abb4f01872392785
round  7:02d133fe40d15f1073673b36bba35abd
Key [13]:837d7ca2722419e6be3fae35900c3958
Key [14]:93f8442973e7fccf2e7232d1d057c73a
round  8:275506a3d08c84e94cc58ed60054505e
Key [15]:8a7a9edffa3c52918bc6a45f57d91f5d
Key [16]:f214a95d777f763c56109882c4b52c84
Key [17]:10e2ee92c5ea1ddc5eb010e55510c403
Ka      :9cd6650ead86323e87cafb1ff516d1e0
----------------------------------------
rand    :3348470a7ea6cc6eb81b40472133262c
PIN length = 6 octets
PIN     :fcad169d7295
address :430d572f8842
round  1:3348470a7ea6cc6eb81b404721332620
Key [ 1]:fcad169d7295430d572f8842fcad169d
Key [ 2]:b3479d4d4fd178c43e7bc5b0c7d8983c
round  2:af976da9225066d563e10ab955e6fc32
Key [ 3]:7112462b37d82dd81a2a35d9eb43cb7c
Key [ 4]:c5a7030f8497945ac7b84600d1d161fb
round  3:d08f826ebd55a0bd7591c19a89ed9bde
added ->:e3d7c964c3fb6cd3cdac01dda820c1fe
Key [ 5]:84b0c6ef4a63e4dff19b1f546d683df5
Key [ 6]:f4023edfc95d1e79ed4bb4de9b174f5d
round  4:6cd952785630dfc7cf81eea625e42c5c
Key [ 7]:ea38dd9a093ac9355918632c90c79993
Key [ 8]:dbba01e278ddc76380727f5d7135a7de
round  5:93573b2971515495978264b88f330f7f
Key [ 9]:d4dc3a31be34e412210fafa6eca00776
Key [10]:39d1e190ee92b0ff16d92a8be58d2fa0
round  6:b3f01d5e7fe1ce6da7b46d8c389baf47
Key [11]:1eb081328d4bcf94c9117b12c5cf22ac
Key [12]:7e047c2c552f9f1414d946775fabfe30
round  7:0b833bff6106d5bae033b4ce5af5a924
Key [13]:e78e685d9b2a7e29e7f2a19d1bc38ebd
Key [14]:1b582272a3121718c4096d2d8602f215
round  8:23de0bbdc70850a7803f4f10c63b2c0f
Key [15]:8569e860530d9c3d48a0870dac33f676
Key [16]:6966b528fdd1dc222527052c8f6cf5a6
```

```
Key [17]:a34244c757154c53171c663b0b56d5c2
Ka      :98f1543ab4d87bd5ef5296fb5e3d3a21
----------------------------------------
rand    :0f5bb150b4371ae4e5785293d22b7b0c
PIN length = 5 octets
PIN     :b10d068bca
address :b44775199f29
round  1:0f5bb150b4371ae4e5785293d22b7b07
Key [ 1]:b10d068bcab44775199f29b10d068bca
Key [ 2]:aec70d1048f1bbd2c18040318a8402ad
round  2:342d2b79d7fb7cd110379742b9842c79
Key [ 3]:6d8d5cf338f29ef4420639ef488e4fa9
Key [ 4]:a1584117541b759ba6d9f7eb2bedcbba
round  3:9407e8e3e810603921bf81cfda62770a
added ->:9b6299b35c477addc437d35c088df20d
Key [ 5]:09a20676666aeed6f22176274eb433f4
Key [ 6]:840472c001add5811a054be5f5c74754
round  4:9a3ba953225a7862c0a842ed3d0b2679
Key [ 7]:fad9e45c8bf70a972fcd9bff0e8751f5
Key [ 8]:e8f30ff666dfd212263416496ff3b2c2
round  5:2c573b6480852e875df34b28a5c44509
Key [ 9]:964cdba0cf8d593f2fc40f96daf8267a
Key [10]:bcd65c11b13e1a70bcd4aafba8864fe3
round  6:21b0cc49e880c5811d24dee0194e6e9e
Key [11]:468c8548ea9653c1a10df6288dd03c1d
Key [12]:5d252d17af4b09d3f4b5f7b5677b8211
round  7:e6d6bdcd63e1d37d9883543ba86392fd
Key [13]:e814bf307c767428c67793dda2df95c7
Key [14]:4812b979fdc20f0ff0996f61673a42cc
round  8:e3dde7ce6bd7d8a34599aa04d6a760ab
Key [15]:5b1e2033d1cd549fc4b028146eb5b3b7
Key [16]:0f284c14fb8fe706a5343e3aa35af7b1
Key [17]:b1f7a4b7456d6b577fded6dc7a672e37
Ka      :c55070b72bc982adb972ed05d1a74ddb
----------------------------------------
rand    :148662a4baa73cfadb55489159e476e1
PIN length = 4 octets
PIN     :fb20f177
address :a683bd0b1896
round  1:148662a4baa73cfadb55489159e476eb
Key [ 1]:fb20f177a683bd0b1896fb20f177a683
Key [ 2]:47266cefbfa468ca7916b458155dc825
round  2:3a942eb6271c3f4e433838a5d3fcbd27
Key [ 3]:688853a6d6575eb2f6a2724b0fbc133b
Key [ 4]:7810df048019634083a2d9219d0b5fe0
round  3:9c835b98a063701c0887943596780769
added ->:8809bd3c1a0aace6d3dcdca4cf5c7d82
Key [ 5]:c78f6dcf56da1bbd413828b33f5865b3
Key [ 6]:eb3f3d407d160df3d293a76d1a513c4a
round  4:7e68c4bafa020a4a59b5a1968105bab5
Key [ 7]:d330e038d6b19d5c9bb0d7285a360064
Key [ 8]:9bd3ee50347c00753d165faced702d9c
```

```
round  5:227bad0cf0838bdb15b3b3872c24f592
Key [ 9]:9543ad0fb3fe74f83e0e2281c6d4f5f0
Key [10]:746cd0383c17e0e80e6d095a87fd0290
round  6:e026e98c71121a0cb739ef6f59e14d26
Key [11]:fa28bea4b1c417536608f11f406ea1dd
Key [12]:3aee0f4d21699df9cb8caf5354a780ff
round  7:cd6a6d8137d55140046f8991da1fa40a
Key [13]:372b71bc6d1aa6e785358044fbcf05f4
Key [14]:00a01501224c0405de00aa2ce7b6ab04
round  8:52cd7257fe8d0c782c259bcb6c9f5942
Key [15]:c7015c5c1d7c030e00897f104a006d4a
Key [16]:260a9577790c62e074e71e19fd2894df
Key [17]:c041b7a231493acd15ddcdaee94b9f52
Ka      :7ec864df2f1637c7e81f2319ae8f4671
----------------------------------------
rand    :193a1b84376c88882c8d3b4ee93ba8d5
PIN length = 3 octets
PIN     :a123b9
address :4459a44610f6
round  1:193a1b84376c88882c8d3b4ee93ba8dc
Key [ 1]:a123b94459a44610f6a123b94459a446
Key [ 2]:5f64d384c8e990c1d25080eb244dde9b
round  2:3badbd58f100831d781ddd3ccedefd3f
Key [ 3]:5abc00eff8991575c00807c48f6dbea5
Key [ 4]:127521158ad6798fb6479d1d2268abe6
round  3:0b53075a49c6bf2df2421c655fdedf68
added ->:128d22de7e3247a5decf572bb61987b4
Key [ 5]:f2a1f620448b8e56665608df2ab3952f
Key [ 6]:7c84c0af02aad91dc39209c4edd220b1
round  4:793f4484fb592e7a78756fd4662f990d
Key [ 7]:f6445b647317e7e493bb92bf6655342f
Key [ 8]:3cae503567c63d3595eb140ce60a84c0
round  5:9e46a8df925916a342f299a8306220a0
Key [ 9]:734ed5a806e072bbecb4254993871679
Key [10]:cda69ccb4b07f65e3c8547c11c0647b8
round  6:6bf9cd82c9e1be13fc58eae0b936c75a
Key [11]:c48e531d3175c2bd26fa25cc8990e394
Key [12]:6d93d349a6c6e9ff5b26149565b13d15
round  7:e96a9871471240f198811d4b8311e9a6
Key [13]:5c4951e85875d663526092cd4cbdb667
Key [14]:f19f7758f5cde86c3791efaf563b3fd0
round  8:e94ca67d3721d5fb08ec069191801a46
Key [15]:bf0c17f3299b37d984ac938b769dd394
Key [16]:7edf4ad772a6b9048588f97be25bde1c
Key [17]:6ee7ba6afefc5b561abbd8d6829e8150
Ka      :ac0daabf17732f632e34ef193658bf5d
----------------------------------------
rand    :1453db4d057654e8eb62d7d62ec3608c
PIN length = 2 octets
PIN     :3eaf
address :411fbbb51d1e
round  1:1453db4d057654e8eb62d7d62ec36084
```

```
Key [ 1]:3eaf411fbbb51d1e3eaf411fbbb51d1e
Key [ 2]:c3a1a997509f00fb4241aba607109c64
round  2:0b78276c1ebc65707d38c9c5fa1372bd
Key [ 3]:3c729833ae1ce7f84861e4dbad6305cc
Key [ 4]:c83a43c3a66595cb8136560ed29be4ff
round  3:23f3f0f6441563d4c202cee0e5cb2335
added ->:3746cbbb418bb73c2964a536cb8e83b1
Key [ 5]:18b26300b86b70acdd1c8f5cbc7c5da8
Key [ 6]:04efc75309b98cd8f1cef5513c18e41e
round  4:c61afa90d3c14bdf588320e857afdc00
Key [ 7]:517c789cecadc455751af73198749fb8
Key [ 8]:fd9711f913b5c844900fa79dd765d0e2
round  5:a8a0e02ceb556af8bfa321789801183a
Key [ 9]:bb5cf30e7d3ceb930651b1d16ee92750
Key [10]:3d97c7862ecab42720e984972f8efd28
round  6:0b58e922438d224db34b68fca9a5ea12
Key [11]:4ce730344f6b09e449dcdb64cd466666
Key [12]:38828c3a56f922186adcd9b713cdcc31
round  7:b90664c4ac29a8b4bb26debec9ffc5f2
Key [13]:d30fd865ea3e9edcff86a33a2c319649
Key [14]:1fdb63e54413acd968195ab6fa424e83
round  8:6934de3067817cefd811abc5736c163b
Key [15]:a16b7c655bbaa262c807cba8ae166971
Key [16]:7903dd68630105266049e23ca607cda7
Key [17]:888446f2d95e6c2d2803e6f4e815ddc9
Ka      :1674f9dc2063cc2b83d3ef8ba692ebef
----------------------------------------
rand    :1313f7115a9db842fcedc4b10088b48d
PIN length = 1 octets
PIN     :6d
address :008aa9be62d5
round  1:1313f7115a9db842fcedc4b10088b48a
Key [ 1]:6d008aa9be62d56d008aa9be62d56d00
Key [ 2]:46ebfeafb6657b0a1984a8dc0893accf
round  2:839b23b83b5701ab095bafd162ec0ac7
Key [ 3]:8e15595edcf058af62498ee3c1dc6098
Key [ 4]:dd409c3444e94b9cc08396ae967542a0
round  3:c0a2010cc44f2139427f093f4f97ae68
added ->:d3b5f81d9eecd97bbe6ccd8e4f1f62e2
Key [ 5]:487deff5d519f6a6481e947b926f633c
Key [ 6]:5b4b6e3477ed5c2c01f6e607d3418963
round  4:1a5517a0efad3575931d8ea3bee8bd07
Key [ 7]:34b980088d2b5fd6b6a2aceeda99c9c4
Key [ 8]:e7d06d06078acc4ecdbc8da800b73078
round  5:d3ce1fdfe716d72c1075ff37a8a2093f
Key [ 9]:7d375bad245c3b757380021af8ecd408
Key [10]:14dac4bc2f4dc4929a6cceec47f4c3a3
round  6:47e90cb55be6e8dd0f583623c2f2257b
Key [11]:66cfda3c63e464b05e2e7e25f8743ad7
Key [12]:77cfccda1ad380b9fdf1df10846b50e7
round  7:f866ae6624f7abd4a4f5bd24b04b6d43
Key [13]:3e11dd84c031a470a8b66ec6214e44cf
```

```
Key [14]:2f03549bdb3c511eea70b65ddbb08253
round  8:02e8e17cf8be4837c9c40706b613dfa8
Key [15]:e2f331229ddfcc6e7bea08b01ab7e70c
Key [16]:b6b0c3738c5365bc77331b98b3fba2ab
Key [17]:f5b3973b636119e577c5c15c87bcfd19
Ka      :38ec0258134ec3f08461ae5c328968a1

========================================
```

9.5 FOUR TESTS OF E3

```
rand    :00000000000000000000000000000000
aco     :48afcdd4bd40fef76693b113
key     :00000000000000000000000000000000
round  1:00000000000000000000000000000000
Key [ 1]:00000000000000000000000000000000
Key [ 2]:4697b1baa3b7100ac537b3c95a28ac64
round  2:78d19f9307d2476a523ec7a8a026042a
Key [ 3]:ecabaac66795580df89af66e66dc053d
Key [ 4]:8ac3d8896ae9364943bfebd4969b68a0
round  3:600265247668dda0e81c07bbb30ed503
Key [ 5]:5d57921fd5715cbb22c1be7bbc996394
Key [ 6]:2a61b8343219fdfb1740e6511d41448f
round  4:d7552ef7cc9dbde568d80c2215bc4277
Key [ 7]:dd0480dee731d67f01a2f739da6f23ca
Key [ 8]:3ad01cd1303e12a1cd0fe0a8af82592c
round  5:fb06bef32b52ab8f2a4f2b6ef7f6d0cd
Key [ 9]:7dadb2efc287ce75061302904f2e7233
Key [10]:c08dcfa981e2c4272f6c7a9f52e11538
round  6:b46b711ebb3cf69e847a75f0ab884bdd
Key [11]:fc2042c708e409555e8c147660ffdfd7
Key [12]:fa0b21001af9a6b9e89e624cd99150d2
round  7:c585f308ff19404294f06b292e978994
Key [13]:18b40784ea5ba4c80ecb48694b4e9c35
Key [14]:454d54e5253c0c4a8b3fcca7db6baef4
round  8:2665fadb13acf952bf74b4ab12264b9f
Key [15]:2df37c6d9db52674f29353b0f011ed83
Key [16]:b60316733b1e8e70bd861b477e2456f1
Key [17]:884697b1baa3b7100ac537b3c95a28ac
round  1:5d3ecb17f26083df0b7f2b9b29aef87c
Key [ 1]:e9e5dfc1b3a79583e9e5dfc1b3a79583
Key [ 2]:7595bf57e0632c59f435c16697d4c864
round  2:de6fe85c5827233fe22514a16f321bd8
Key [ 3]:e31b96afcc75d286ef0ae257cbbc05b7
Key [ 4]:0d2a27b471bc0108c6263aff9d9b3b6b
round  3:7cd335b50d09d139ea6702623af85edb
added ->:211100a2ff6954e6e1e62df913a656a7
Key [ 5]:98d1eb5773cf59d75d3b17b3bc37c191
Key [ 6]:fd2b79282408ddd4ea0aa7511133336f
round  4:991dccb3201b5b1c4ceff65a3711e1e9
Key [ 7]:331227756638a41d57b0f7e071ee2a98
```

```
Key [ 8]:aa0dd8cc68b406533d0f1d64aabacf20
round  5:18768c7964818805fe4c6ecae8a38599
Key [ 9]:669291b0752e63f806fce76f10e119c8
Key [10]:ef8bdd46be8ee0277e9b78adef1ec154
round  6:82f9aa127a72632af43d1a17e7bd3a09
Key [11]:f3902eb06dc409cfd78384624964bf51
Key [12]:7d72702b21f97984a721c99b0498239d
round  7:1543d7870bf2d6d6efab3cbf62dca97d
Key [13]:532e60bceaf902c52a06c2c283ecfa32
Key [14]:181715e5192efb2a64129668cf5d9dd4
round  8:eee3e8744a5f8896de95831ed837ffd5
Key [15]:83017c1434342d4290e961578790f451
Key [16]:2603532f365604646ff65803795ccce5
Key [17]:882f7c907b565ea58dae1c928a0dcf41
kc      :cc802aecc7312285912e90af6a1e1154
----------------------------------------
rand    :950e604e655ea3800fe3eb4a28918087
aco     :68f4f472b5586ac5850f5f74
key     :34e86915d20c485090a6977931f96df5
round  1:950e604e655ea3800fe3eb4a28918087
Key [ 1]:34e86915d20c485090a6977931f96df5
Key [ 2]:8de2595003f9928efaf37e5229935bdb
round  2:d46f5a04c967f55840f83d1cdb5f9afc
Key [ 3]:46f05ec979a97cb6ddf842ecc159c04a
Key [ 4]:b468f0190a0a83783521deae8178d071
round  3:e16edede9cb6297f32e1203e442ac73a
Key [ 5]:8a171624dedbd552356094daaadcf12a
Key [ 6]:3085e07c85e4b99313f6e0c837b5f819
round  4:805144e55e1ece96683d23366fc7d24b
Key [ 7]:fe45c27845169a66b679b2097d147715
Key [ 8]:44e2f0c35f64514e8bec66c5dc24b3ad
round  5:edbaf77af070bd22e9304398471042f1
Key [ 9]:0d534968f3803b6af447eaf964007e7b
Key [10]:f5499a32504d739ed0b3c547e84157ba
round  6:0dab1a4c846aef0b65b1498812a73b50
Key [11]:e17e8e456361c46298e6592a6311f3fb
Key [12]:ec6d14da05d60e8abac807646931711f
round  7:1e7793cac7f55a8ab48bd33bc9c649e0
Key [13]:2b53dde3d89e325e5ff808ed505706ae
Key [14]:41034e5c3fb0c0d4f445f0cf23be79b0
round  8:3723768baa78b6a23ade095d995404da
Key [15]:e2ca373d405a7abf22b494f28a6fd247
Key [16]:74e09c9068c0e8f1c6902d1b70537c30
Key [17]:767a7f1acf75c3585a55dd4a428b2119
round  1:39809afb773efd1b7510cd4cb7c49f34
Key [ 1]:1d0d48d485abddd3798b483a82a0f878
Key [ 2]:aed957e600a5aed5217984dd5fef6fd8
round  2:6436ddbabe92655c87a7d0c12ae5e5f6
Key [ 3]:fee00bb0de89b6ef0a289696a4faa884
Key [ 4]:33ce2f4411db4dd9b7c42cc586b8a2ba
round  3:cec690f7e0aa5f063062301e049a5cc5
added ->:f7462a0c97e85c1d4572fd52b35efbf1
```

Sample Data

```
Key [ 5]:b5116f5c6c29e05e4acb4d02a46a3318
Key [ 6]:ff4fa1f0f73d1a3c67bc2298abc768f9
round  4:dcdfe942e9f0163fc24a4718844b417d
Key [ 7]:5453650c0819e001e48331ad0e9076e0
Key [ 8]:b4ff8dda778e26c0dce08349b81c09a1
round  5:265a16b2f766afae396e7a98c189fda9
Key [ 9]:f638fa294427c6ed94300fd823b31d10
Key [10]:1ccfa0bd86a9879b17d4bc457e3e03d6
round  6:628576b5291d53d1eb8611c8624e863e
Key [11]:0eaee2ef4602ac9ca19e49d74a76d335
Key [12]:6e1062f10a16e0d378476da3943842e9
round  7:d7b9c2e9b2d5ea5c27019324cae882b3
Key [13]:40be960bd22c744c5b23024688e554b9
Key [14]:95c9902cb3c230b44d14ba909730d211
round  8:97fb6065498385e47eb3df6e2ca439dd
Key [15]:10d4b6e1d1d6798aa00aa2951e32d58d
Key [16]:c5d4b91444b83ee578004ab8876ba605
Key [17]:1663a4f98e2862eddd3ec2fb03dcc8a4
kc      :c1beafea6e747e304cf0bd7734b0a9e2
----------------------------------------
rand    :6a8ebcf5e6e471505be68d5eb8a3200c
aco     :658d791a9554b77c0b2f7b9f
key     :35cf77b333c294671d426fa79993a133
round  1:6a8ebcf5e6e471505be68d5eb8a3200c
Key [ 1]:35cf77b333c294671d426fa79993a133
Key [ 2]:c4524e53b95b4bf2d7b2f095f63545fd
round  2:ade94ec585db0d27e17474b58192c87a
Key [ 3]:c99776768c6e9f9dd3835c52cea8d18a
Key [ 4]:f1295db23823ba2792f21217fc01d23f
round  3:da8dc1a10241ef9e6e069267cd2c6825
Key [ 5]:9083db95a6955235bbfad8aeefec5f0b
Key [ 6]:8bab6bc253d0d0c7e0107feab728ff68
round  4:e6665ca0772ceecbc21222ff7be074f8
Key [ 7]:2fa1f4e7a4cf3ccd876ec30d194cf196
Key [ 8]:267364be247184d5337586a19df8bf84
round  5:a857a9326c9ae908f53fee511c5f4242
Key [ 9]:9aef21965b1a6fa83948d107026134c7
Key [10]:d2080c751def5dc0d8ea353cebf7b973
round  6:6678748a1b5f21ac05cf1b117a7c342f
Key [11]:d709a8ab70b0d5a2516900421024b81e
Key [12]:493e4843805f1058d605c8d1025f8a56
round  7:766c66fe9c460bb2ae39ec01e435f725
Key [13]:b1ed21b71daea03f49fe74b2c11fc02b
Key [14]:0e1ded7ebf23c72324a0165a698c65c7
round  8:396e0ff7b2b9b7a3b35c9810882c7596
Key [15]:b3bf4841dc92f440fde5f024f9ce8be9
Key [16]:1c69bc6c2994f4c84f72be8f6b188963
Key [17]:bb7b66286dd679a471e2792270f3bb4d
round  1:45654f2f26549675287200f07cb10ec9
Key [ 1]:1e2a5672e66529e4f427b0682a3a34b6
Key [ 2]:974944f1ce0037b1febcf61a2bc961a2
round  2:990cd869c534e76ed4f4af7b3bfbc6c8
```

```
Key [ 3]:8147631fb1ce95d624b480fc7389f6c4
Key [ 4]:6e90a2db33d284aa13135f3c032aa4f4
round  3:ceb662f875aa6b94e8192b5989abf975
added ->:8b1bb1d753fe01e1c08b2ba9f55c07bc
Key [ 5]:cbad246d24e36741c46401e6387a05f9
Key [ 6]:dcf52aaec5713110345a41342c566fc8
round  4:d4e000be5de78c0f56ff218f3c1df61b
Key [ 7]:8197537aa9d27e67d17c16b182c8ec65
Key [ 8]:d66e00e73d835927a307a3ed79d035d8
round  5:9a4603bdef954cfaade2052604bed4e4
Key [ 9]:71d46257ecc1022bcd312ce6c114d75c
Key [10]:f91212fa528379651fbd2c32890c5e5f
round  6:09a0fd197ab81eb933eece2fe0132dbb
Key [11]:283acc551591fadce821b02fb9491814
Key [12]:ca5f95688788e20d94822f162b5a3920
round  7:494f455a2e7a5db861ece816d4e363e4
Key [13]:ba574aef663c462d35399efb999d0e40
Key [14]:6267afc834513783fef1601955fe0628
round  8:37a819f91c8380fb7880e640e99ca947
Key [15]:fdcd9be5450eef0f8737e6838cd38e2b
Key [16]:8cfbd9b8056c6a1ce222b92b94319b38
Key [17]:4f64c1072c891c39eeb95e63318462e0
kc      :a3032b4df1cceba8adc1a04427224299
----------------------------------------
rand    :5ecd6d75db322c75b6afbd799cb18668
aco     :63f701c7013238bbf88714ee
key     :b9f90c53206792b1826838b435b87d4d
round  1:5ecd6d75db322c75b6afbd799cb18668
Key [ 1]:b9f90c53206792b1826838b435b87d4d
Key [ 2]:15f74bbbde4b9d1e08f858721f131669
round  2:72abb85fc80c15ec2b00d72873ef9ad4
Key [ 3]:ef7fb29f0b01f82706c7439cc52f2dab
Key [ 4]:3003a6aecdee06b9ac295cce30dcdb93
round  3:2f10bab93a0f73742183c68f712dfa24
Key [ 5]:5fcdbb3afdf7df06754c954fc6340254
Key [ 6]:ddaa90756635579573fe8ca1f93d4a38
round  4:183b145312fd99d5ad08e7ca4a52f04e
Key [ 7]:27ca8a7fc703aa61f6d7791fc19f704a
Key [ 8]:702029d8c6e42950762317e730ec5d18
round  5:cbad52d3a026b2e38b9ae6fefffecc32
Key [ 9]:ff15eaa3f73f4bc2a6ccfb9ca24ed9c5
Key [10]:034e745246cd2e2cfc3bda39531ca9c5
round  6:ce5f159d0a1acaacd9fb4643272033a7
Key [11]:0a4d8ff5673731c3dc8fe87e39a34b77
Key [12]:637592fab43a19ac0044a21afef455a2
round  7:8a49424a10c0bea5aba52dbbffcbcce8
Key [13]:6b3fde58f4f6438843cdbe92667622b8
Key [14]:a10bfa35013812f39bf2157f1c9fca4e
round  8:f5e12da0e93e26a5850251697ec0b917
Key [15]:2228fe5384e573f48fdd19ba91f1bf57
Key [16]:5f174db2bc88925c0fbc6b5485bafc08
Key [17]:28ff90bd0dc31ea2bb479feb7d8fe029
```

Sample Data

```
round  1:0c75eed2b54c1cfb9ff522daef94ed4d
Key [ 1]:a21ceb92d3c027326b4de775865fe8d0
Key [ 2]:26f64558a9f0a1652f765efd546f3208
round  2:48d537ac209a6aa07b70000016c602e8
Key [ 3]:e64f9ef630213260f1f79745a0102ae5
Key [ 4]:af6a59d7cebfd0182dcca9a537c4add8
round  3:8b6d517ac893743a401b3fb7911b64e1
added ->:87e23fa87ddf90c1df10616d7eaf51ac
Key [ 5]:9a6304428b45da128ab64c8805c32452
Key [ 6]:8af4d1e9d80cb73ec6b44e9b6e4f39d8
round  4:9f0512260a2f7a5067efc35bf1706831
Key [ 7]:79cc2d138606f0fca4e549c34a1e6d19
Key [ 8]:803dc5cdde0efdbee7a1342b2cd4d344
round  5:0cfd7856edfafac51f29e86365de6f57
Key [ 9]:e8fa996448e6b6459ab51e7be101325a
Key [10]:2acc7add7b294acb444cd933f0e74ec9
round  6:2f1fa34bf352dc77c0983a01e8b7d622
Key [11]:f57de39e42182efd6586b86a90c86bb1
Key [12]:e418dfd1bb22ebf1bfc309cd27f5266c
round  7:ee4f7a53849bf73a747065d35f3752b1
Key [13]:80a995913385658637085 4db6e0470b3
Key [14]:f4c1bc2f764a0193749f5fc09011a1ae
round  8:8fec6f7249760ebf69e370e9a4b80a92
Key [15]:d036cef70d6470c3f52f1b5d25b0c29d
Key [16]:d0956af6b8700888a1cc88f07ad226dc
Key [17]:1ce8b39c4c7677373c30849a3ee08794
kc      :ea520cfc546b00eb7c3a6cea3ecb39ed

========================================
```

Core System Package [Controller volume]

Part H

SECURITY SPECIFICATION

This document describes the specification of the security system which may be used at the link layer. The Encryption, Authentication and Key Generation schemes are specified. The requirements for the supporting process of random number generation are also specified.

CONTENTS

1 Security Overview 749

2 Random Number Generation 751

3 Key Management....753

3.1 Key Types 753

3.2 Key Generation and Initialization 755

3.2.1 Generation of initialization key, ...756

3.2.2 Authentication....756

3.2.3 Generation of a unit key 756

3.2.4 Generation of a combination key....757

3.2.5 Generating the encryption key 758

3.2.6 Point-to-multipoint configuration....759

3.2.7 Modifying the link keys 760

3.2.8 Generating a master key 760

4 Encryption....763

4.1 Encryption Key Size Negotiation....764

4.2 Encryption of Broadcast Messages....764

4.3 Encryption Concept....765

4.4 Encryption Algorithm 766

4.4.1 The operation of the cipher 768

4.5 LFSR Initialization 769

4.6 Key Stream Sequence 772

5 Authentication 773

5.1 Repeated Attempts 775

6 The Authentication And Key-Generating Functions....777

6.1 The Authentication Function E1 777

6.2 The Functions Ar and A'r....779

6.2.1 The round computations....779

6.2.2 The substitution boxes "e" and "l"....779

6.2.3 Key scheduling 780

6.3 E2-Key Generation Function for Authentication....781

6.4 E3-Key Generation Function for Encryption....783

7 List of Figures....785

8 List of Tables 787

1 SECURITY OVERVIEW

Bluetooth wireless technology provides peer-to-peer communications over short distances. In order to provide usage protection and information confidentiality, the system provides security measures both at the application layer and the link layer. These measures are designed to be appropriate for a peer environment. This means that in each device, the authentication and encryption routines are implemented in the same way. Four different entities are used for maintaining security at the link layer: a Bluetooth device address, two secret keys, and a pseudo-random number that shall be regenerated for each new transaction. The four entities and their sizes are summarized in Table 1.1.

Entity	Size
BD_ADDR	48 bits
Private user key, authentication	128 bits
Private user key, encryption configurable length (byte-wise)	8-128 bits
RAND	128 bits

Table 1.1: Entities used in authentication and encryption procedures.

The Bluetooth device address (BD_ADDR) is the 48-bit address. The BD_ADDR can be obtained via user interactions, or, automatically, via an inquiry routine by a device.

The secret keys are derived during initialization and are never disclosed. The encryption key is derived from the authentication key during the authentication process. For the authentication algorithm, the size of the key used is always 128 bits. For the encryption algorithm, the key size may vary between 1 and 16 octets (8 - 128 bits). The size of the encryption key is configurable for two reasons. The first has to do with the many different requirements imposed on cryptographic algorithms in different countries – both with respect to export regulations and official attitudes towards privacy in general. The second reason is to facilitate a future upgrade path for the security without the need of a costly redesign of the algorithms and encryption hardware; increasing the effective key size is the simplest way to combat increased computing power at the opponent side.

The encryption key is entirely different from the authentication key (even though the latter is used when creating the former, as is described in Section 6.4 on page 783). Each time encryption is activated, a new encryption key shall be generated. Thus, the lifetime of the encryption key does not necessarily correspond to the lifetime of the authentication key.

It is anticipated that the authentication key will be more static in its nature than the encryption key – once established, the particular application running on the device decides when, or if, to change it. To underline the fundamental impor-

tance of the authentication key to a specific link, it is often be referred to as the link key.

The RAND is a pseudo-random number which can be derived from a random or pseudo-random process in the device. This is not a static parameter, it will change frequently.

In the remainder of this chapter, the terms user and application will be used interchangeably to designate the entity that is at either side.

2 RANDOM NUMBER GENERATION

Each device has a pseudo-random number generator. Pseudo-random numbers are used for many purposes within the security functions – for instance, for the challenge-response scheme, for generating authentication and encryption keys, etc. Ideally, a true random generator based on some physical process with inherent randomness should be used as a seed. Examples of such processes are thermal noise from a semiconductor or resistor and the frequency instability of a free running oscillator. For practical reasons, a software based solution with a pseudo-random generator is probably preferable. In general, it is quite difficult to classify the randomness of a pseudo-random sequence. Within this specification, the requirements placed on the random numbers used are non-repeating and randomly generated.

The expression ‘non-repeating’ means that it shall be highly unlikely that the value will repeat itself within the lifetime of the authentication key. For example, a non-repeating value could be the output of a counter that is unlikely to repeat during the lifetime of the authentication key, or a date/time stamp.

The expression ‘randomly generated’ means that it shall not be possible to predict its value with a chance that is significantly larger than 0 (e.g., greater than $1/2^L$ for a key length of L bits).

The LM may use such a generator for various purposes; i.e. whenever a random number is needed (such as the RANDs, the unit keys, K_{init}, K_{master}, and random back-off or waiting intervals).

3 KEY MANAGEMENT

It is important that the encryption key size within a specific device cannot be set by the user – this should be a factory preset entity. In order to prevent the user from over-riding the permitted key size, the Bluetooth baseband processing shall not accept an encryption key given from higher software layers. Whenever a new encryption key is required, it shall be created as defined in Section 6.4 on page 783.

Changing a link key shall also be done through the defined baseband procedures. Depending on what kind of link key it is, different approaches are required. The details are found in Section 3.2.7 on page 760.

3.1 KEY TYPES

The link key is a 128-bit random number which is shared between two or more parties and is the base for all security transactions between these parties. The link key itself is used in the authentication routine. Moreover, the link key is used as one of the parameters when the encryption key is derived.

In the following, a session is defined as the time interval for which the device is a member of a particular piconet. Thus, the session terminates when the device disconnects from the piconet.

The link keys are either semi-permanent or temporary. A semi-permanent link key may be stored in non-volatile memory and may be used after the current session is terminated. Consequently, once a semi-permanent link key is defined, it may be used in the authentication of several subsequent connections between the devices sharing it. The designation semi-permanent is justified by the possibility of changing it. How to do this is described in Section 3.2.7 on page 760.

The lifetime of a temporary link key is limited by the lifetime of the current session – it shall not be reused in a later session. Typically, in a point-to-multipoint configuration where the same information is to be distributed securely to several recipients, a common encryption key is useful. To achieve this, a special link key (denoted master key) may temporarily replace the current link keys. The details of this procedure are found in Section 3.2.6 on page 759.

In the following, the current link key is the link key in use at the current moment. It can be semi-permanent or temporary. Thus, the current link key is used for all authentications and all generation of encryption keys in the on-going connection (session).

In order to accommodate different types of applications, four types of link keys have been defined:

- the combination key K_{AB}
- the unit key K_A
- the temporary key K_{master}
- the initialization key K_{init}

Note: the use of unit keys is deprecated since it is implicitly insecure.

In addition to these keys there is an encryption key, denoted K_c. This key is derived from the current link key. Whenever encryption is activated by an LM command, the encryption key shall be changed automatically. The purpose of separating the authentication key and encryption key is to facilitate the use of a shorter encryption key without weakening the strength of the authentication procedure. There are no governmental restrictions on the strength of authentication algorithms. However, in some countries, such restrictions exist on the strength of encryption algorithms.

The combination key K_{AB} and the unit key K_A are functionally indistinguishable; the difference is in the way they are generated. The unit key K_A is generated in, and therefore dependent on, a single device A. The unit key shall be generated once at installation of the device; thereafter, it is very rarely changed. The combination key is derived from information in both devices A and B, and is therefore always dependent on two devices. The combination key is derived for each new combination of two devices.

It depends on the application or the device whether a unit key or a combination key is used. Devices which have little memory to store keys, or are installed in equipment that will be accessible to a large group of users, should use their own unit key. In that case, they only have to store a single key. Applications that require a higher security level should use the combination keys. These applications will require more memory since a combination key for each link to a different device has to be stored.

The master key, K_{master}, shall only be used during the current session. It shall only replace the original link key temporarily. For example, this may be utilized when a master wants to reach more than two devices simultaneously using the same encryption key, see Section 3.2.6 on page 759.

The initialization key, K_{init}, shall be used as the link key during the initialization process when no combination or unit keys have been defined and exchanged yet or when a link key has been lost. The initialization key protects the transfer of initialization parameters. The key is derived from a random number, an L-octet PIN code, and a BD_ADDR. This key shall only be used during initialization.

The PIN may be a fixed number provided with the device (for example when there is no user interface as in a PSTN plug). Alternatively, the PIN can be selected by the user, and then entered in both devices that are to be matched. The latter procedure should be used when both devices have a user interface, for example a phone and a laptop. Entering a PIN in both devices is more secure than using a fixed PIN in one of the devices, and should be used whenever possible. Even if a fixed PIN is used, it shall be possible to change the PIN; this is in order to prevent re-initialization by users who once got hold of the PIN. If no PIN is available, a default value of zero may be used. The length of this default PIN is one byte, PIN(default) = 0x00. This default PIN may be provided by the host.

For many applications the PIN code will be a relatively short string of numbers. Typically, it may consist of only four decimal digits. Even though this gives sufficient security in many cases, there exist countless other, more sensitive, situations where this is not reliable enough. Therefore, the PIN code may be chosen to be any length from 1 to 16 octets. For the longer lengths, the devices exchanging PIN codes may not use mechanical (i.e. human) interaction, but rather may use software at the application layer. For example, this can be a Diffie-Hellman key agreement, where the exchanged key is passed on to the K_{init} generation process in both devices, just as in the case of a shorter PIN code.

3.2 KEY GENERATION AND INITIALIZATION

The link keys must be generated and distributed among the devices in order to be used in the authentication procedure. Since the link keys shall be secret, they shall not be obtainable through an inquiry routine in the same way as the Bluetooth device addresses. The exchange of the keys takes place during an initialization phase which shall be carried out separately for each two devices that are using authentication and encryption. The initialization procedures consist of the following five parts:

- generation of an initialization key
- generation of link key
- link key exchange
- authentication
- generation of encryption key in each device (optional)

After the initialization procedure, the devices can proceed to communicate, or the link can be disconnected. If encryption is implemented, the E_0 algorithm shall be used with the proper encryption key derived from the current link key. For any new connection established between devices A and B, they should use the common link key for authentication, instead of once more deriving K_{init} from the PIN. A new encryption key derived from that particular link key shall be created next time encryption is activated.

If no link key is available, the LM shall automatically start an initialization procedure.

3.2.1 Generation of initialization key, K_{init}

A link key is used temporarily during initialization, the initialization key K_{init}. This key shall be derived by the E_{22} algorithm from a BD_ADDR, a PIN code, the length of the PIN (in octets), and a random number IN_RAND. The principle is depicted in Figure 6.4 on page 783. The 128-bit output from E_{22} shall be used for key exchange during the generation of a link key. When the devices have performed the link key exchange, the initialization key shall be discarded.

When the initialization key is generated, the PIN is augmented with the BD_ADDR. If one device has a fixed PIN the BD_ADDR of the other device shall be used. If both devices have a variable PIN the BD_ADDR of the device that received IN_RAND shall be used. If both devices have a fixed PIN they cannot be paired. Since the maximum length of the PIN used in the algorithm cannot exceed 16 octets, it is possible that not all octets of BD_ADDR will be used. This procedure ensures that K_{init} depends on the identity of the device with a variable PIN. A fraudulent device may try to test a large number of PINs by claiming another BD_ADDR each time. It is the application's responsibility to take countermeasures against this threat. If the device address is kept fixed, the waiting interval before the next try may be increased exponentially (see Section 5.1 on page 775).

The details of the E_{22} algorithm can be found in Section 6.3 on page 781.

3.2.2 Authentication

The authentication procedure shall be carried out as described in Section 5 on page 773. During each authentication, a new AU_RAND_A shall be issued.

Mutual authentication is achieved by first performing the authentication procedure in one direction and then immediately performing the authentication procedure in the opposite direction.

As a side effect of a successful authentication procedure an auxiliary parameter, the Authenticated Ciphering Offset (ACO), will be computed. The ACO shall be used for ciphering key generation as described in Section 3.2.5 on page 758.

The claimant/verifier status is determined by the LM.

3.2.3 Generation of a unit key

A unit key K_A shall be generated when the device is in operation for the first time; i.e. not during each initialization. The unit key shall be generated by the E_{21} algorithm as described in Section 6.3 on page 781. Once created, the unit key should be stored in non-volatile memory and very rarely changed. If after initialization

the unit key is changed, any previously initialized devices will possess a wrong link key. At initialization, the application must determine which of the two parties will provide the unit key as the link key. Typically, this will be the device with restricted memory capabilities, since this device only has to remember its own unit key. The unit key shall be transferred to the other party and then stored as the link key for that particular party. So, for example in Figure 3.1 on page 757, the unit key of device A, K_A, is being used as the link key for the connection A-B; device A sends the unit key K_A to device B; device B will store K_A as the link key K_{BA}. For another initialization, for example with device C, device A will reuse its unit key K_A, whereas device C stores it as K_{CA}.

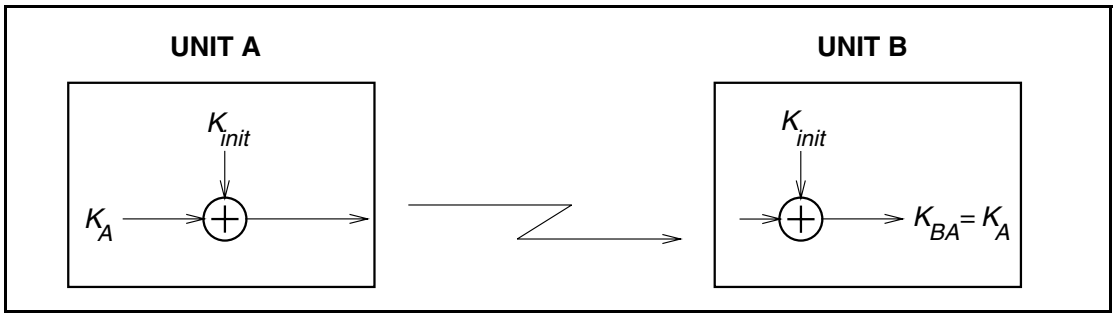

Figure 3.1: Generation of unit key. When the unit key has been exchanged, the initialization key is discarded in both devices.

3.2.4 Generation of a combination key

To use a combination key, it is first generated during the initialization procedure. The combination key is the combination of two numbers generated in device A and B, respectively. First, each device shall generate a random number, LK_RAND_A and LK_RAND_B. Then, utilizing E_{21} with the random number and their own BD_ADDRs, the two random numbers

$$LK_K_A = E_{21}(LK_RAND_A, BD_ADDR_A), \qquad \text{(EQ 1)}$$

and

$$LK_K_B = E_{21}(LK_RAND_B, BD_ADDR_B), \qquad \text{(EQ 2)}$$

shall be created in device A and device B, respectively. These numbers constitute the devices' contribution to the combination key that is to be created. Then, the two random numbers LK_RAND_A and LK_RAND_B shall be exchanged securely by XORing with the current link key, K. Thus, device A shall send $K \oplus LK_RAND_A$ to device B, while device B shall send $K \oplus LK_RAND_B$ to device A. If this is done during the initialization phase the link key $K = K_{init}$.

When the random numbers LK_RAND_A and LK_RAND_B have been mutually exchanged, each device shall recalculate the other device's contribution to the combination key. This is possible since each device knows the Bluetooth device address of the other device. Thus, device A shall calculate (EQ 2) on page 757 and device B shall calculate (EQ 1) on page 757. After this, both devices shall combine the two numbers to generate the 128-bit link key. The combining operation is a simple bitwise modulo-2 addition (i.e. XOR). The result shall be stored in device A as the link key K_{AB} and in device B as the link key K_{BA}. When both devices have derived the new combination key, a mutual authentication procedure shall be initiated to confirm the success of the transaction. The old link key shall be discarded after a successful exchange of a new combination key. The message flow between master and slave and the principle for creating the combination key is depicted in Figure 3.2 on page 758.

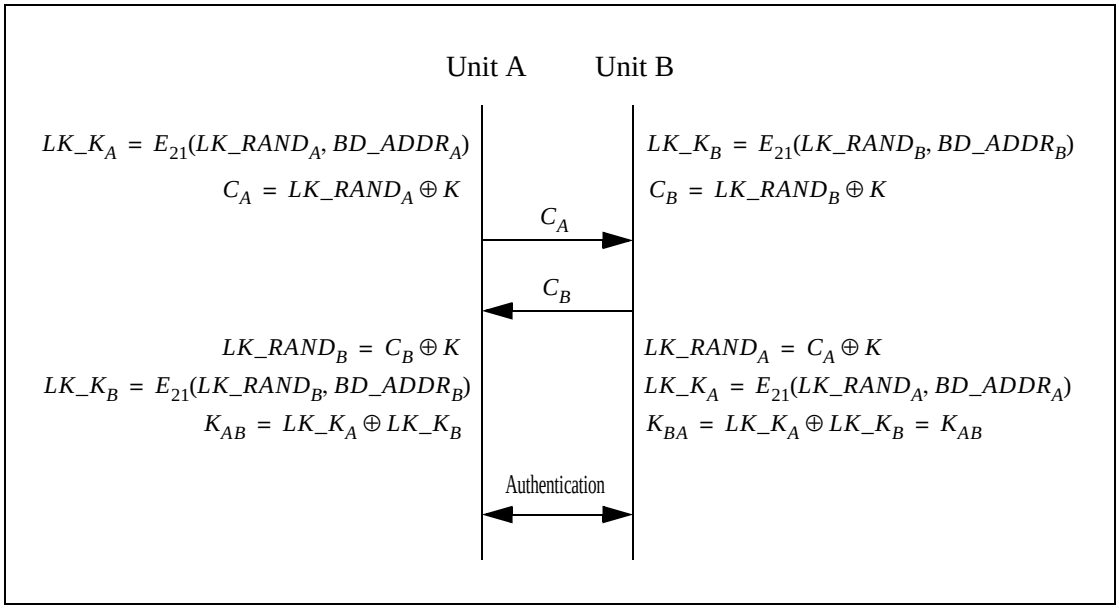

Figure 3.2: Generating a combination key. The old link key (K) is discarded after the exchange of a new combination key has succeeded

3.2.5 Generating the encryption key

The encryption key, K_C, is derived by algorithm E_3 from the current link key, a 96-bit Ciphering OFfset number (COF), and a 128-bit random number. The COF is determined in one of two ways. If the current link key is a master key, then COF shall be derived from the master BD_ADDR. Otherwise the value of COF shall be set to the value of ACO as computed during the authentication procedure. Therefore:[1]

1. $x \cup y$ denotes the concatenation of x and y.

$$\mathrm{COF} = \begin{cases} \mathrm{BD_ADDR} \cup \mathrm{BD_ADDR}, & \text{if link key is a master key} \\ \mathrm{ACO}, & \text{otherwise.} \end{cases} \quad \text{(EQ 3)}$$

There is an explicit call of E_3 when the LM activates encryption. Consequently, the encryption key is automatically changed each time the device enters encryption mode. The details of the key generating function E_3 can be found in Section 6.4 on page 783.

3.2.6 Point-to-multipoint configuration

It is possible for the master to use separate encryption keys for each slave in a point-to-multipoint configuration with ciphering activated. Then, if the application requires more than one slave to listen to the same payload, each slave must be addressed individually. This can cause unwanted capacity loss for the piconet. Moreover, a slave might not be capable of switching between two or more encryption keys in real time (e.g., after looking at the LT_ADDR in the header). Thus, the master cannot use different encryption keys for broadcast messages and individually addressed traffic. Therefore, the master may tell several slave devices to use a common link key (and, hence, indirectly also to use a common encryption key) and may then broadcast the information encrypted. For many applications, this key is only of temporary interest. In the following discussion, this key is denoted by K_{master}.

The transfer of necessary parameters shall be protected by the routine described in Section 3.2.8 on page 760. After the confirmation of successful reception in each slave, the master shall issue a command to the slaves to replace their respective current link key by the new (temporary) master key. Before encryption can be activated, the master shall also generate and distribute a common EN_RAND to all participating slaves. Using this random number and the newly derived master key, each slave shall generate a new encryption key.

Note that the master must negotiate the encryption key length to use individually with each slave that will use the master key. If the master has already negotiated with some of these slaves, it has knowledge of the sizes that can be accepted. There may be situations where the permitted key lengths of some devices are incompatible. In that case, the master must exclude the limiting device from the group.

When all slaves have received the necessary data, the master can communicate information on the piconet securely using the encryption key derived from the new temporary link key. Each slave in possession of the master key can eavesdrop on all encrypted traffic, not only the traffic intended for itself. The master may tell all participants to fall back to their old link keys simultaneously.

3.2.7 Modifying the link keys

A link key based on a unit key can be changed. The unit key is created once during first use. Typically, the link key should be changed rather than the unit key, as several devices may share the same unit key as link key (e.g. a printer whose unit key is distributed to all users using the printer's unit key as link key). Changing the unit key will require re-initialization of all devices connecting. Changing the unit key can be justified in some circumstances, e.g. to deny access to all previously allowed devices.

If the key change concerns combination keys, then the procedure is straightforward. The change procedure is identical to the procedure described in Figure 3.2 on page 758, using the current value of the combination key as link key. This procedure can be carried out at any time after the authentication and encryption start. Since the combination key corresponds to a single link, it can be modified each time this link is established. This will improve the security of the system since then old keys lose their validity after each session.

Starting up an entirely new initialization procedure is also possible. In that case, user interaction is necessary since a PIN will be required in the authentication and encryption procedures.

3.2.8 Generating a master key

The key-change routines described so far are semi-permanent. To create the master link key, which can replace the current link key during a session (see Section 3.2.6 on page 759), other means are needed. First, the master shall create a new link key from two 128-bit random numbers, RAND1 and RAND2. This shall be done by

$$K_{master} = E_{22}(\text{RAND1}, \text{RAND2}, 16). \qquad \text{(EQ 4)}$$

This key is a 128-bit random number. The reason for using the output of E_{22} and not directly choosing a random number as the key, is to avoid possible problems with degraded randomness due to a poor implementation of the random number generator within the device.

Then, a third random number, RAND, shall be transmitted to the slave. Using E_{22} with the current link key and RAND as inputs, both the master and the slave shall compute a 128-bit overlay. The master shall send the bitwise XOR of the overlay and the new link key to the slave. The slave, who knows the overlay, shall recalculate K_{master}. To confirm the success of this transaction, the devices shall perform a mutual authentication procedure using the new link key. This procedure shall then be repeated for each slave that receives the new link key. The ACO values from the authentications shall not replace the current ACO, as this ACO is needed to (re)compute a ciphering key when the master falls back to the previous (non-temporary) link key.

The master activates encryption by an LM command. Before activating encryption, the master shall ensure that all slaves receive the same random number, EN_RAND, since the encryption key is derived through the means of E_3 individually in all participating devices. Each slave shall compute a new encryption key as follows:

$$K_C = E_3(K_{master}, \text{EN_RAND}, \text{COF}) \qquad \text{(EQ 5)}$$

where the value of COF shall be derived from the master's BD_ADDR as specified by equation (EQ 3) on page 759. The details of the encryption key generating function are described in Section 6.4 on page 783. The message flow between the master and the slave when generating the master key is depicted in Figure 3.3. Note that in this case the ACO produced during the authentication is not used when computing the ciphering key.

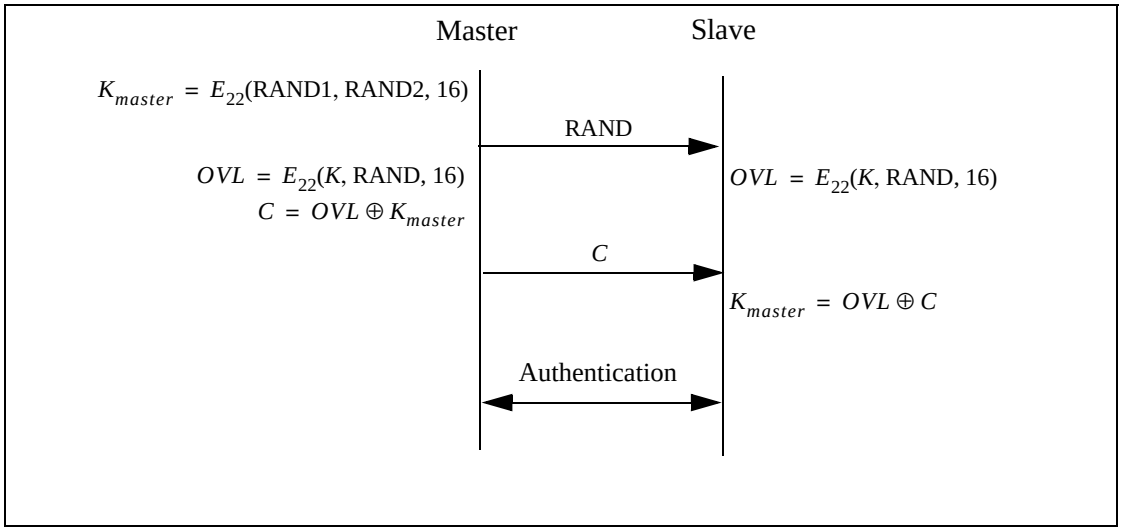

Figure 3.3: Master link key distribution and computation of the corresponding encryption key.

4 ENCRYPTION

User information can be protected by encryption of the packet payload; the access code and the packet header shall never be encrypted. The encryption of the payload shall be carried out with a stream cipher called E_0 that shall be re-synchronized for every payload. The overall principle is shown in Figure 4.1 on page 763.

The stream cipher system E_0 shall consist of three parts:

- the first part performs initialization (generation of the payload key). The payload key generator shall combine the input bits in an appropriate order and shall shift them into the four LFSRs used in the key stream generator.
- the second part generates the key stream bits this shall use a method derived from the summation stream cipher generator attributable to Massey and Rueppel. The second part is the main part of the cipher system, as it will also be used for initialization.
- the third part performs encryption and decryption.

The Massey and Rueppel method has been thoroughly investigated, and there exist good estimates of its strength with respect to presently known methods for cryptanalysis. Although the summation generator has weaknesses that can be used in correlation attacks, the high re-synchronization frequency will disrupt such attacks.

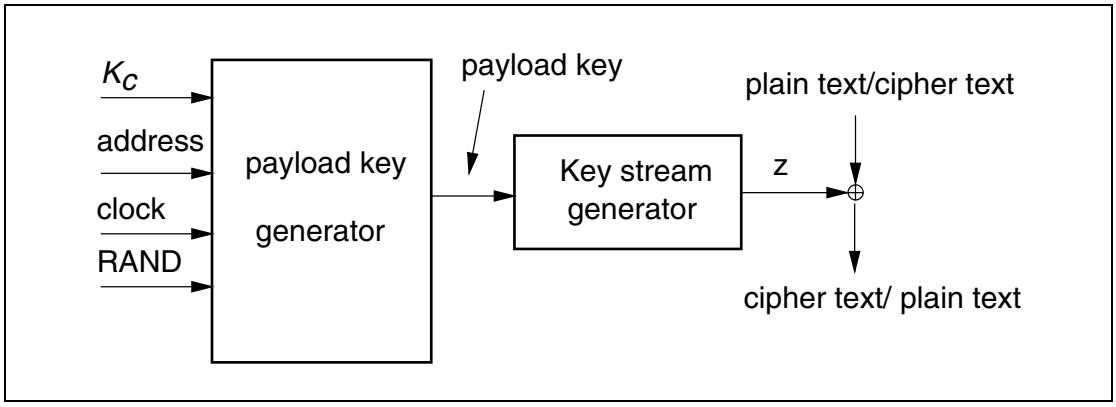

Figure 4.1: Stream ciphering for Bluetooth with E_0.

4.1 ENCRYPTION KEY SIZE NEGOTIATION

Each device implementing the baseband specification shall have a parameter defining the maximal allowed key length, L_{max}, $1 \leq L_{max} \leq 16$ (number of octets in the key). For each application using encryption, a number L_{min} shall be defined indicating the smallest acceptable key size for that particular application. Before generating the encryption key, the devices involved shall negotiate to decide the key size to use.

The master shall send a suggested value, $L_{sug}^{(M)}$, to the slave. Initially, the suggested value shall be set to $L_{max}^{(M)}$. If $L_{min}^{(S)} \leq L_{sug}^{(M)}$, and, the slave supports the suggested length, the slave shall acknowledge and this value shall be the length of the encryption key for this link. However, if both conditions are not fulfilled, the slave shall send a new proposal, $L_{sug}^{(S)} < L_{sug}^{(M)}$, to the master. This value shall be the largest among all supported lengths less than the previous master suggestion. Then, the master shall perform the corresponding test on the slave suggestion. This procedure shall be repeated until a key length agreement is reached, or, one device aborts the negotiation. An abort may be caused by lack of support for L_{sug} and all smaller key lengths, or if $L_{sug} < L_{min}$ in one of the devices. In case of an abort link encryption can not be employed.

The possibility of a failure in setting up a secure link is an unavoidable consequence of letting the application decide whether to accept or reject a suggested key size. However, this is a necessary precaution. Otherwise a fraudulent device could enforce a weak protection on a link by claiming a small maximum key size.

4.2 ENCRYPTION OF BROADCAST MESSAGES

There may be three settings for the baseband regarding encryption:

1. No encryption.
   This is the default setting. No messages are encrypted
2. Point-to-point only encryption.
   Broadcast messages are not encrypted. This may be enabled either during the connection establishment procedure or after the connection has been established.
3. Point-to-point and broadcast encryption.
   All messages are encrypted. This may be enabled after the connection has been established only. This setting should not be enabled unless all affected links share the same master link key as well as the same EN_RAND value, both used in generating the encryption key.

4.3 ENCRYPTION CONCEPT

Broadcast traffic	Individually addressed traffic
No encryption	No encryption
No encryption	Encryption, K_{master}
Encryption, K_{master}	Encryption, K_{master}

Table 4.1: Possible encryption modes for a slave in possession of a master key.

For the encryption routine, a stream cipher algorithm is used in which ciphering bits are bit-wise modulo-2 added to the data stream to be sent over the air interface. The payload is ciphered after the CRC bits are appended, but, prior to the FEC encoding.

Each packet payload shall be ciphered separately. The cipher algorithm E_0 uses the master Bluetooth device address (BD_ADDR), 26 bits of the master real-time clock ($CLK_{26\text{-}1}$) and the encryption key K_C as input, see Figure 4.2 on page 766 (where it is assumed that device A is the master).

The encryption key K_C is derived from the current link key, COF, and a random number, EN_RAND_A (see Section 6.4 on page 783). The random number shall be issued by the master before entering encryption mode. Note that EN_RAND_A is publicly known since it is transmitted as plain text over the air.

Within the E_0 algorithm, the encryption key K_C is modified into another key denoted K'_C. The maximum effective size of this key shall be factory preset and may be set to any multiple of eight between one and sixteen (8-128 bits). The procedure for deriving the key is described in Section 4.5 on page 769.

The real-time clock is incremented for each slot. The E_0 algorithm shall be re-initialized at the start of each new packet (i.e. for Master-to-Slave as well as for Slave-to-Master transmission). By using $CLK_{26\text{-}1}$ at least one bit is changed between two transmissions. Thus, a new keystream is generated after each re-initialization. For packets covering more than a single slot, the Bluetooth clock as found in the first slot shall be used for the entire packet.

The encryption algorithm E_0 generates a binary keystream, K_{cipher}, which shall be modulo-2 added to the data to be encrypted. The cipher is symmetric; decryption shall be performed in exactly the same way using the same key as used for encryption.

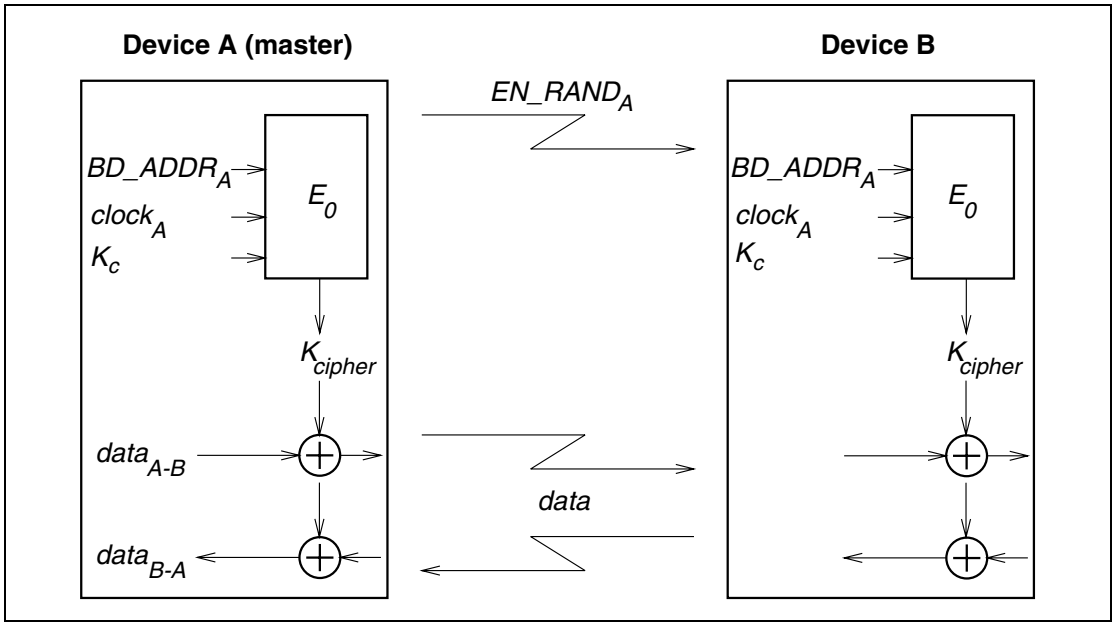

Figure 4.2: Functional description of the encryption procedure

4.4 ENCRYPTION ALGORITHM

The system uses linear feedback shift registers (LFSRs) whose output is combined by a simple finite state machine (called the summation combiner) with 16 states. The output of this state machine is the key stream sequence, or, during initialization phase, the randomized initial start value. The algorithm uses an encryption key K_C, a 48-bit Bluetooth address, the master clock bits $CLK_{26\text{-}1}$, and a 128-bit RAND value. Figure 4.3 on page 767 shows the setup.

There are four LFSRs ($LFSR_1$,...,$LFSR_4$) of lengths $L_1 = 25$, $L_2 = 31$, $L_3 = 33$, and, $L_4 = 39$, with feedback polynomials as specified in Table 4.2 on page 767. The total length of the registers is 128. These polynomials are all primitive. The Hamming weight of all the feedback polynomials is chosen to be five – a reasonable trade-off between reducing the number of required XOR gates in the hardware implementation and obtaining good statistical properties of the generated sequences.

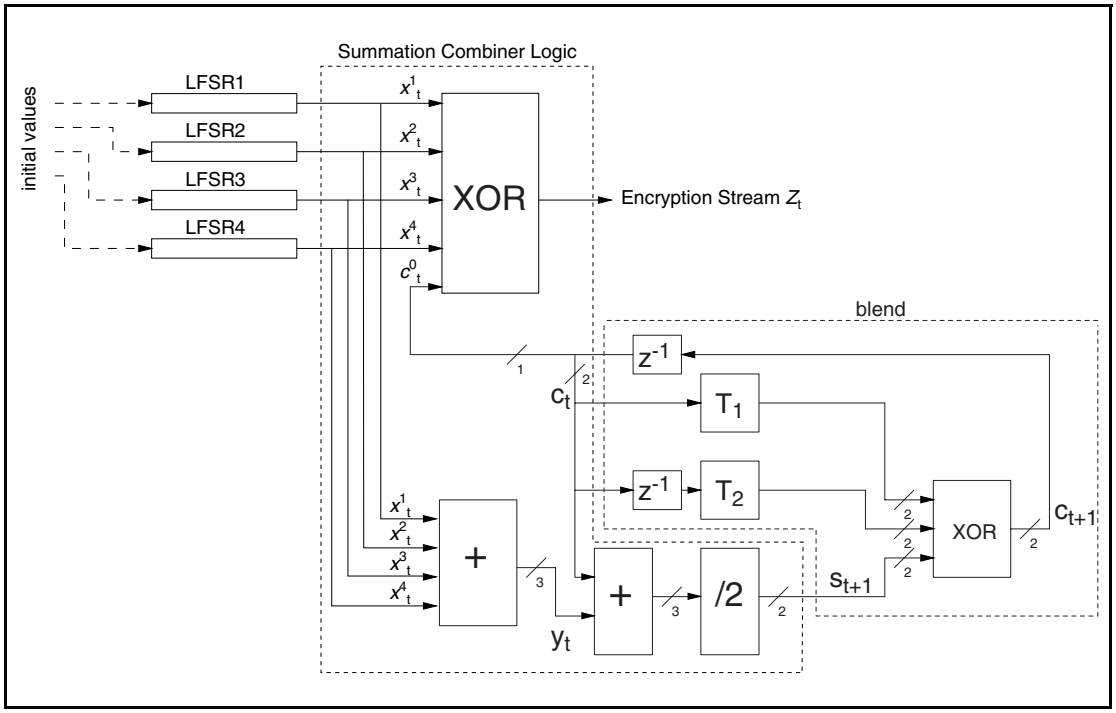

Figure 4.3: Concept of the encryption engine.

i	L_i	**feedback** $f_i(t)$	**weight**
1	25	$t^{25} + t^{20} + t^{12} + t^8 + 1$	5
2	31	$t^{31} + t^{24} + t^{16} + t^{12} + 1$	5
3	33	$t^{33} + t^{28} + t^{24} + t^4 + 1$	5
4	39	$t^{39} + t^{36} + t^{28} + t^4 + 1$	5

Table 4.2: The four primitive feedback polynomials.

Let x_t^i denote the tth symbol of LFSR$_i$. The value y_t is derived from the four-tuple $x_t^1, \ldots, x_t^4$ using the following equation:

$$y_t = \sum_{i=1}^{4} x_t^i, \qquad \text{(EQ 6)}$$

where the sum is over the integers. Thus y_t can take the values 0,1,2,3, or 4. The output of the summation generator is obtained by the following equations:

$$z_t = x_t^1 \oplus x_t^2 \oplus x_t^3 \oplus x_t^4 \oplus c_t^0 \in \{0, 1\}, \qquad \text{(EQ 7)}$$

$$s_{t+1} = (s^1_{t+1}, s^0_{t+1}) = \left\lfloor \frac{y_t + c_t}{2} \right\rfloor \in \{0, 1, 2, 3\}, \quad \text{(EQ 8)}$$

$$c_{t+1} = (c^1_{t+1}, c^0_{t+1}) = s_{t+1} \oplus T_1[c_t] \oplus T_2[c_{t-1}], \quad \text{(EQ 9)}$$

where $T_1[.]$ and $T_2[.]$ are two different linear bijections over GF(4). Suppose GF(4) is generated by the irreducible polynomial $x^2 + x + 1$, and let α be a zero of this polynomial in GF(4). The mappings T_1 and T_2 are now defined as:

$$T_1\colon \mathrm{GF}(4) \to \mathrm{GF}(4)$$
$$x \mapsto x$$
$$T_2\colon \mathrm{GF}(4) \to \mathrm{GF}(4)$$
$$x \mapsto (\alpha + 1)x.$$

The elements of GF(4) can be written as binary vectors. This is summarized in Table 4.3.

x	$T_1[x]$	$T_2[x]$
00	00	00
01	01	11
10	10	01
11	11	10

Table 4.3: The mappings T_1 and T_2.

Since the mappings are linear, they can be implemented using XOR gates; i.e.

$$T_1\colon \quad (x_1, x_0) \mapsto (x_1, x_0),$$
$$T_2\colon \quad (x_1, x_0) \mapsto (x_0, x_1 \oplus x_0).$$

4.4.1 The operation of the cipher

Figure 4.4 on page 768 gives an overview of the operation in time. The encryption algorithm shall run through the initialization phase before the start of transmission or reception of a new packet. Thus, for multislot packets the cipher is initialized using the clock value of the first slot in the multislot sequence.

Figure 4.4: Overview of the operation of the encryption engine. Between each start of a packet (TX or RX), the LFSRs are re-initialized.

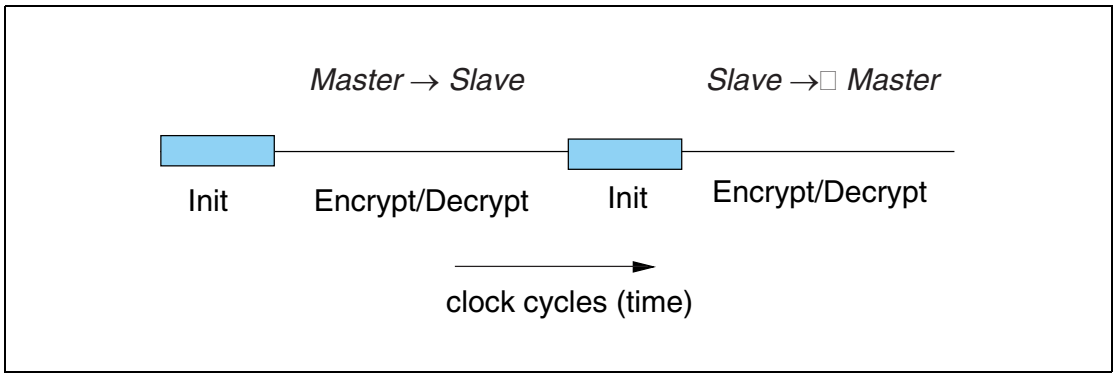

4.5 LFSR INITIALIZATION

The key stream generator is loaded with an initial value for the four LFSRs (in total 128 bits) and the 4 bits that specify the values of c_0 and c_{-1}. The 132 bit initial value is derived from four inputs by using the key stream generator. The input parameters are the key K_C, a 128-bit random number RAND, a 48-bit Bluetooth device address, and the 26 master clock bits $CLK_{26\text{-}1}$.

The effective length of the encryption key may vary between 8 and 128 bits. Note that the actual key length as obtained from E_3 is 128 bits. Then, within E_0, the key length may be reduced by a modulo operation between K_C and a polynomial of desired degree. After reduction, the result is encoded with a block code in order to distribute the starting states more uniformly. The operation shall be as defined in (EQ 10) on page 770.

When the encryption key has been created the LFSRs are loaded with their initial values. Then, 200 stream cipher bits are created by operating the generator. Of these bits, the last 128 are fed back into the key stream generator as an initial value of the four LFSRs. The values of c_t and c_{t-1} are kept. From this point on, when clocked the generator produces the encryption (decryption) sequence which is bitwise XORed to the transmitted (received) payload data.

In the following, octet i of a binary sequence X is $X[i]$. Bit 0 of X is the LSB. Then, the LSB of $X[i]$ corresponds to bit $8i$ of the sequence X, the MSB of $X[i]$ is bit $8i+7$ of X. For instance, bit 24 of the Bluetooth device address is the LSB of BD_ADDR[3].

The details of the initialization shall be as follows:

1. Create the encryption key to use from the 128-bit secret key K_C and the 128-bit publicly known EN_RAND. Let L, $1 \le L \le 16$, be the

effective key length in number of octets. The resulting encryption key is K'_C:

$$K'_C(x) = g_2^{(L)}(x)(K_C(x) \bmod g_1^{(L)}(x)), \qquad \text{(EQ 10)}$$

where $\deg(g_1^{(L)}(x)) = 8L$ and $\deg(g_2^{(L)}(x)) \leq 128 - 8L$. The polynomials are defined in Table 4.4.

2. Shift the 3 inputs K'_C, the Bluetooth device address, the clock, and the six-bit constant 111001 into the LFSRs. In total, 208 bits are shifted in:

   a) Open all switches shown in Figure 4.5 on page 771;

   b) Arrange inputs bits as shown in Figure 4.5; Set the content of all shift register elements to zero. Set $t = 0$.

   c) Start shifting bits into the LFSRs. The rightmost bit at each level of Figure 4.5 is the first bit to enter the corresponding LFSR.

   d) When the first input bit at level i reaches the rightmost position of $LFSR_i$, close the switch of this LFSR.

   e) At $t = 39$ (when the switch of $LFSR_4$ is closed), reset both blend registers $c_{39} = c_{39-1} = 0$; Up to this point, the content of c_t and c_{t-1} has been of no concern. However, their content will now be used in computing the output sequence.

   f) From now on output symbols are generated. The remaining input bits are continuously shifted into their corresponding shift registers. When the last bit has been shifted in, the shift register is clocked with input = 0;

   Note: When finished, $LFSR_1$ has effectively clocked 30 times with feedback closed, $LFSR_2$ has clocked 24 times, $LFSR_3$ has clocked 22 times, and $LFSR_4$ has effectively clocked 16 times with feedback closed.

3. To mix initial data, continue to clock until 200 symbols have been produced with all switches closed ($t = 239$);

4. Keep blend registers c_t and c_{t-1}, make a parallel load of the last 128 generated bits into the LFSRs according to Figure 4.6 at $t = 240$;

After the parallel load in item 4, the blend register contents shall be updated for each subsequent clock.

L	deg	$g_1^{(L)}$	deg	$g_2^{(L)}$
1	[8]	00000000 00000000 00000000 0000011d	[119]	00e275a0 abd218d4 cf928b9b bf6cb08f
2	[16]	00000000 00000000 00000000 0001003f	[112]	0001e3f6 3d7659b3 7f18c258 cff6efef
3	[24]	00000000 00000000 00000000 010000db	[104]	000001be f66c6c3a b1030a5a 1919808b
4	[32]	00000000 00000000 00000001 000000af	[96]	00000001 6ab89969 de17467f d3736ad9

Table 4.4: Polynomials used when creating K'_C. [1]

L	deg	$g_1^{(L)}$	deg	$g_2^{(L)}$
5	[40]	00000000 00000000 00000100 00000039	[88]	00000000 01630632 91da50ec 55715247
6	[48]	00000000 00000000 00010000 00000291	[77]	00000000 00002c93 52aa6cc0 54468311
7	[56]	00000000 00000000 01000000 00000095	[71]	00000000 000000b3 f7fffce2 79f3a073
8	[64]	00000000 00000001 00000000 0000001b	[63]	00000000 00000000 a1ab815b c7ec8025
9	[72]	00000000 00000100 00000000 00000609	[49]	00000000 00000000 0002c980 11d8b04d
10	[80]	00000000 00010000 00000000 00000215	[42]	00000000 00000000 0000058e 24f9a4bb
11	[88]	00000000 01000000 00000000 0000013b	[35]	00000000 00000000 0000000c a76024d7
12	[96]	00000001 00000000 00000000 000000dd	[28]	00000000 00000000 00000000 1c9c26b9
13	[104]	00000100 00000000 00000000 0000049d	[21]	00000000 00000000 00000000 0026d9e3
14	[112]	00010000 00000000 00000000 0000014f	[14]	00000000 00000000 00000000 00004377
15	[120]	01000000 00000000 00000000 000000e7	[7]	00000000 00000000 00000000 00000089
16	[128]	1 00000000 00000000 00000000 00000000	[0]	00000000 00000000 00000000 00000001

Table 4.4: Polynomials used when creating K'_c. . [1]

1. All polynomials are in hexadecimal notation. The LSB is in the rightmost position.

In Figure 4.5, all bits are shifted into the LFSRs, starting with the least significant bit (LSB). For instance, from the third octet of the address, BD_ADDR[2], first BD_ADDR_{16} is entered, followed by BD_ADDR_{17}, etc. Furthermore, CL_0 corresponds to CLK_1,..., CL_{25} corresponds to CLK_{26}.

Note that the output symbols x_t^i, $i = 1, \ldots, 4$ are taken from the positions 24, 24, 32, and 32 for $LFSR_1$, $LFSR_2$,$LFSR_3$, and $LFSR_4$, respectively (counting the leftmost position as number 1).

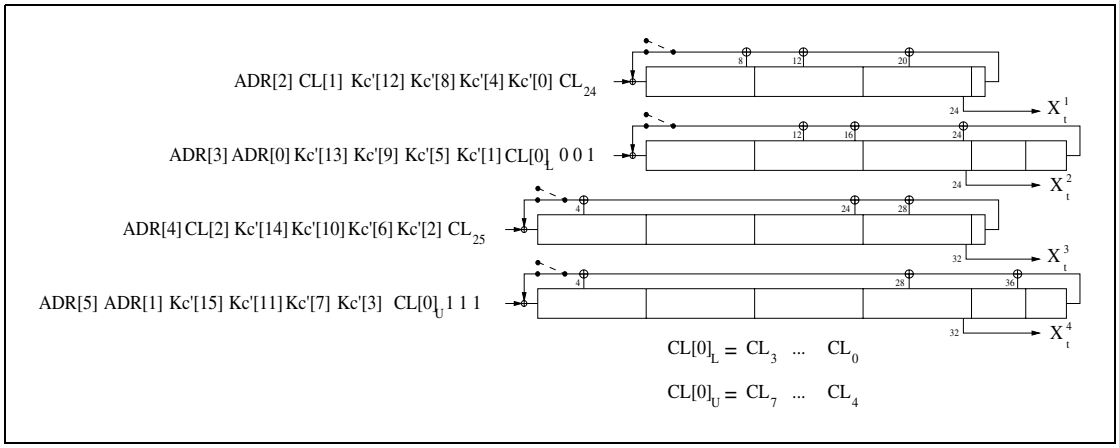

Figure 4.5: Arranging the input to the LFSRs.

In Figure 4.6, the 128 binary output symbols Z_0,..., Z_{127} are arranged in octets denoted Z[0],..., Z[15]. The LSB of Z[0] corresponds to the first of these symbols, the MSB of Z[15] is the last output from the generator. These bits shall be loaded into the LFSRs according to the figure. It is a parallel load and no update of the blend registers is done. The first output symbol is generated at the same time. The octets shall be written into the registers with the LSB in the leftmost position (i.e. the opposite of before). For example, Z_{24} is loaded into position 1 of $LFSR_4$.

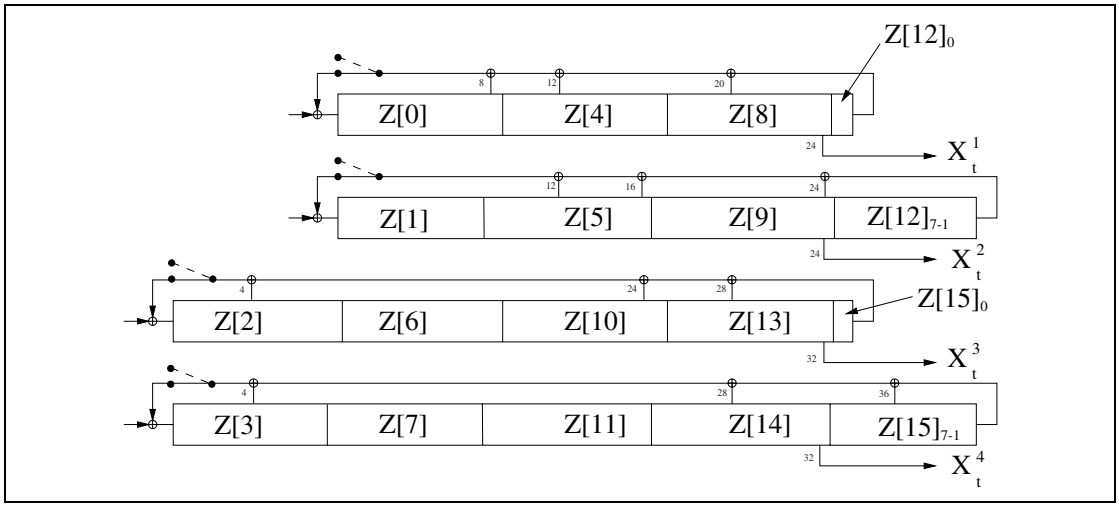

Figure 4.6: Distribution of the 128 last generated output symbols within the LFSRs.

4.6 KEY STREAM SEQUENCE

When the initialization is finished, the output from the summation combiner is used for encryption/decryption. The first bit to use shall be the one produced at the parallel load, i.e. at $t = 240$. The circuit shall be run for the entire length of the current payload. Then, before the reverse direction is started, the entire initialization process shall be repeated with updated values on the input parameters.

Sample data of the encryption output sequence can be found in [Part G] Section 1 on page 649. A necessary, but not sufficient, condition for all Bluetooth compliant implementations of encryption is to produce these encryption streams for identical initialization values.

5 AUTHENTICATION

Authentication uses a challenge-response scheme in which a claimant's knowledge of a secret key is checked through a 2-move protocol using symmetric secret keys. The latter implies that a correct claimant/verifier pair share the same secret key, for example K. In the challenge-response scheme the verifier challenges the claimant to authenticate a random input (the challenge), denoted by AU_RAND_A, with an authentication code, denoted by E_1, and return the result SRES to the verifier, see Figure 5.1 on page 773. This figure also shows that the input to E_1 consists of the tuple AU_RAND_A and the Bluetooth device address (BD_ADDR) of the claimant. The use of this address prevents a simple reflection attack[1]. The secret K shared by devices A and B is the current link key.

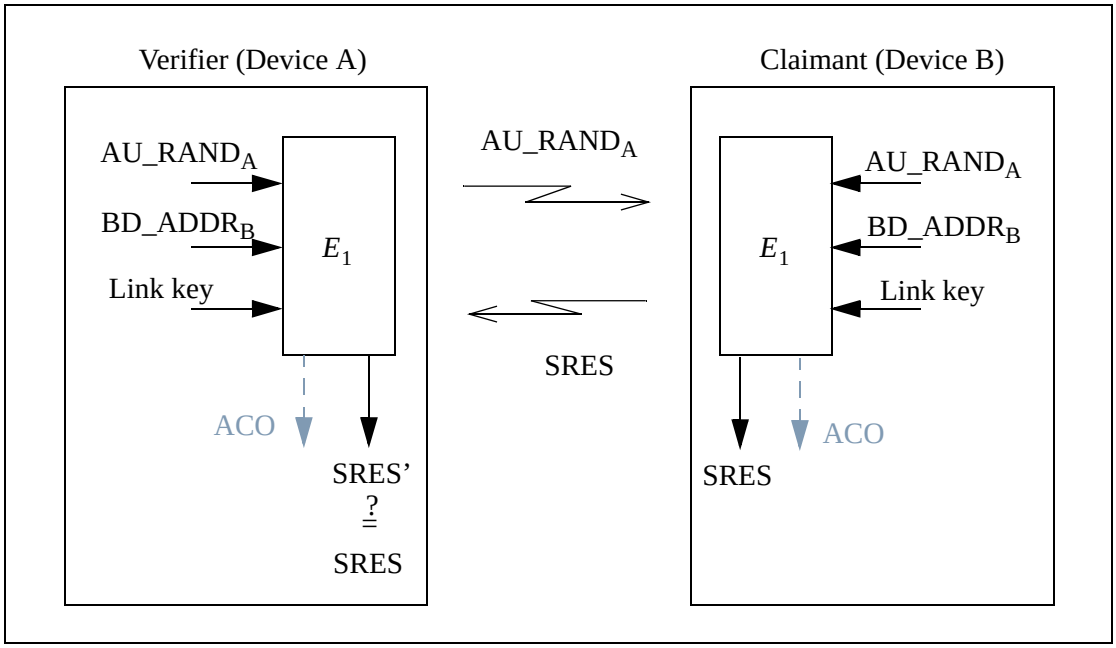

Figure 5.1: Challenge-response for the Bluetooth.

The challenge-response scheme for symmetric keys is depicted in Figure 5.2 on page 774.

1. The reflection attack actually forms no threat because all service requests are dealt with on a FIFO bases. When preemption is introduced, this attack is potentially dangerous.

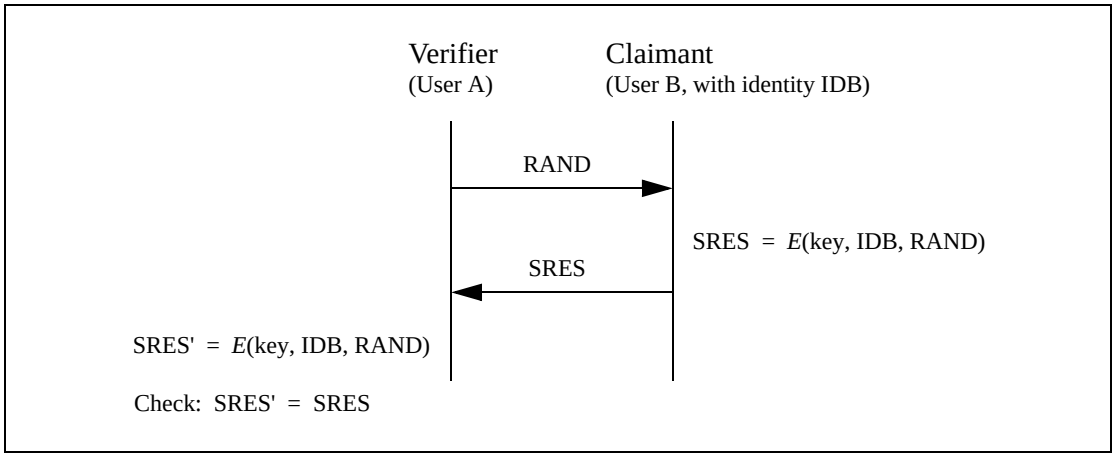

Figure 5.2: Challenge-response for symmetric key systems.

The verifier is not required to be the master. The application indicates which device has to be authenticated. Some applications only require a one-way authentication. However, some peer-to-peer communications, should use a mutual authentication in which each device is subsequently the challenger (verifier) in two authentication procedures. The LM shall process authentication preferences from the application to determine in which direction(s) the authentication(s) takes place. For mutual authentication with the devices of Figure 5.1 on page 773, after device A has successfully authenticated device B, device B could authenticate device A by sending an AU_RAND_B (different from the AU_RAND_A that device A issued) to device A, and deriving the SRES and SRES' from the new AU_RAND_B, the address of device A, and the link key K_{AB}.

If an authentication is successful the value of ACO as produced by E_1 shall be retained.

5.1 REPEATED ATTEMPTS

When the authentication attempt fails, a waiting interval shall pass before the verifier will initiate a new authentication attempt to the same claimant, or before it will respond to an authentication attempt initiated by a device claiming the same identity as the failed device. For each subsequent authentication failure with the same Bluetooth device address, the waiting interval shall be increased exponentially. That is, after each failure, the waiting interval before a new attempt can be made, could be for example, twice as long as the waiting interval prior to the previous attempt[1]. The waiting interval shall be limited to a maximum. The maximum waiting interval depends on the implementation. The waiting time shall exponentially decrease to a minimum when no new failed attempts are made during a certain time period. This procedure prevents an intruder from repeating the authentication procedure with a large number of different keys.

To make the system less vulnerable to denial-of-service attacks, the devices should keep a list of individual waiting intervals for each device it has established contact with. The size of this list may be restricted to only contain the N devices with which the most recent contacts have been made. The number N may vary for different devices depending on available memory size and user environment.

1. Another appropriate value larger than 1 may be used.

6 THE AUTHENTICATION AND KEY-GENERATING FUNCTIONS

This section describes the algorithms used for authentication and key generation.

6.1 THE AUTHENTICATION FUNCTION E_1

The authentication function E_1 is a computationally secure authentication code. E_1 uses the encryption function SAFER+. The algorithm is an enhanced version of an existing 64-bit block cipher SAFER-SK128, and it is freely available. In the following discussion, the block cipher will be denoted as the function A_r which maps using a 128-bit key, a 128-bit input to a 128-bit output, i.e.

$$\begin{aligned} A_r\colon\ \{0,1\}^{128} \times \{0,1\}^{128} &\rightarrow \{0,1\}^{128} \\ (k \times x) &\mapsto t. \end{aligned} \qquad \text{(EQ 11)}$$

The details of A_r are given in the next section. The function E_1 is constructed using A_r as follows

$$\begin{aligned} E_1\colon\ \{0,1\}^{128} \times \{0,1\}^{128} \times \{0,1\}^{48} &\rightarrow \{0,1\}^{32} \times \{0,1\}^{96} \\ (K, \mathrm{RAND}, \mathrm{address}) &\mapsto (\mathrm{SRES}, \mathrm{ACO}), \end{aligned} \qquad \text{(EQ 12)}$$

where $\mathrm{SRES} = Hash(K, \mathrm{RAND}, \mathrm{address}, 6)[0, \ldots, 3]$, where $Hash$ is a keyed hash function defined as[1],

$$\begin{aligned} &Hash\colon \{0,1\}^{128} \times \{0,1\}^{128} \times \{0,1\}^{8 \times L} \times \{6, 12\} \rightarrow \{0,1\}^{128} \\ &(K, I_1, I_2, L) \mapsto A'_r([\tilde{K}], [E(I_2, L) +_{16} (A_r(K, I_1) \oplus_{16} I_1)]), \end{aligned} \qquad \text{(EQ 13)}$$

and where

$$\begin{aligned} &E\colon \{0,1\}^{8 \times L} \times \{6, 12\} \rightarrow \{0,1\}^{8 \times 16} \\ &(X[0, \ldots, L-1], L) \mapsto (X[i(\mathrm{mod\ L})] \ \text{ for } i = 0 \ldots 15), \end{aligned} \qquad \text{(EQ 14)}$$

is an expansion of the L octet word X into a 128-bit word. The function A_r is evaluated twice for each evaluation of E_1. The key $\tilde{K}$ for the second use of A_r (actually A'_r) is offset from K as follows[2]

1. The operator $+_{16}$ denotes bytewise addition mod 256 of the 16 octets, and the operator $\oplus_{16}$ denotes bytewise XORing of the 16 octets.
2. The constants are the largest primes below 257 for which 10 is a primitive root.

$$
\begin{aligned}
\tilde{K}[0] &= (K[0] + 233) \mod 256, & \tilde{K}[1] &= K[1] \oplus 229, \\
\tilde{K}[2] &= (K[2] + 223) \mod 256, & \tilde{K}[3] &= K[3] \oplus 193, \\
\tilde{K}[4] &= (K[4] + 179) \mod 256, & \tilde{K}[5] &= K[5] \oplus 167, \\
\tilde{K}[6] &= (K[6] + 149) \mod 256, & \tilde{K}[7] &= K[7] \oplus 131, \\
\tilde{K}\{8\} &= K[8] \oplus 233, & \tilde{K}[9] &= (K[9] + 229) \mod 256, \\
\tilde{K}[10] &= K[10] \oplus 223, & \tilde{K}[11] &= (K[11] + 193) \mod 256, \\
\tilde{K}[12] &= K[12] \oplus 179, & \tilde{K}[13] &= (K[13] + 167) \mod 256, \\
\tilde{K}[14] &= K[14] \oplus 149, & \tilde{K}[15] &= (K[15] + 131) \mod 256.
\end{aligned}
\qquad \text{(EQ 15)}
$$

A data flowchart of the computation of E_1 is shown in Figure 6.1 on page 778. E_1 is also used to deliver the parameter ACO (Authenticated Ciphering Offset) that is used in the generation of the ciphering key by E_3, see equations (EQ 3) on page 759 and (EQ 23) on page 783. The value of ACO is formed by the octets 4 through 15 of the output of the hash function defined in (EQ 13) on page 777, i.e.

$$\text{ACO} = Hash(K, \text{RAND}, \text{address}, 6)[4, \ldots, 15]. \qquad \text{(EQ 16)}$$

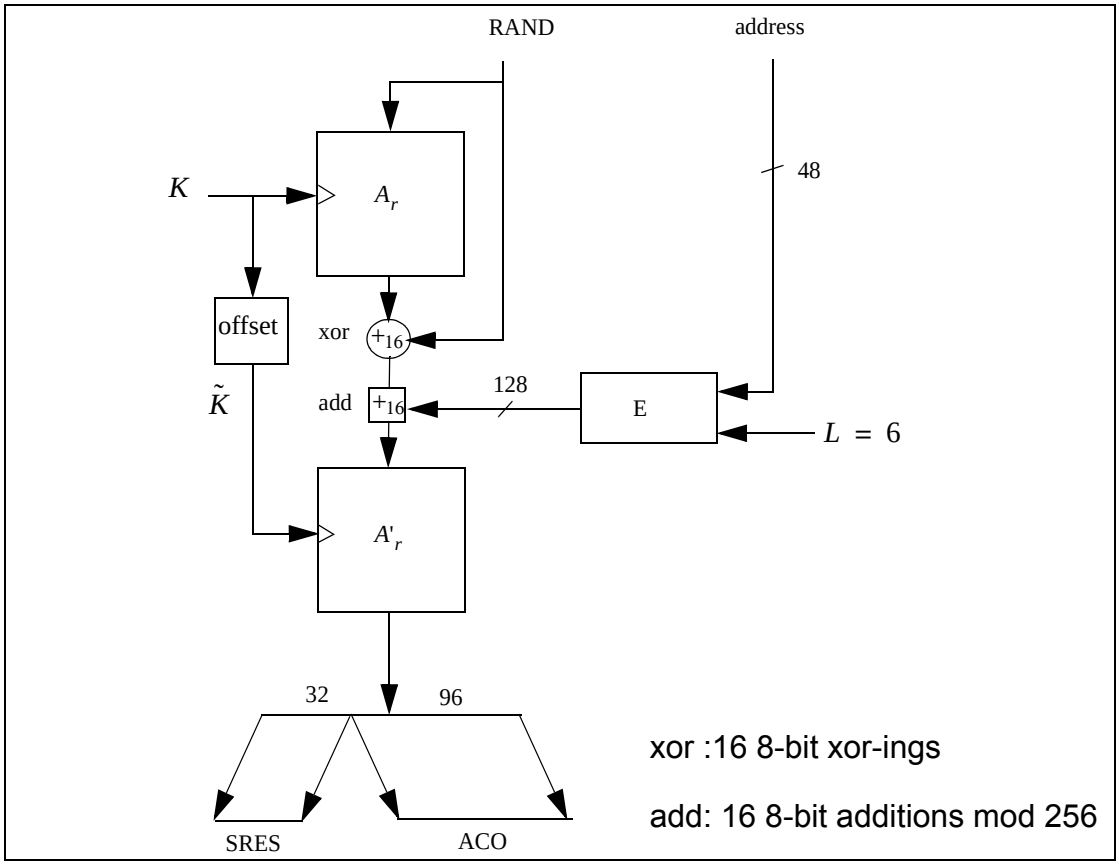

Figure 6.1: Flow of data for the computation of E_1.

6.2 THE FUNCTIONS A_r AND A'_r

The function A_r is identical to SAFER+. It consists of a set of 8 layers, (each layer is called a round) and a parallel mechanism for generating the sub keys $K_p[j]$, $p = 1, 2, \ldots, 17$, which are the round keys to be used in each round. The function will produce a 128-bit result from a 128-bit random input string and a 128-bit key. Besides the function A_r, a slightly modified version referred to as A'_r is used in which the input of round 1 is added to the input of round 3. This is done to make the modified version non-invertible and prevents the use of A'_r (especially in E_{2x}) as an encryption function. See Figure 6.2 on page 780 for details.

6.2.1 The round computations

The computations in each round are a composition of encryption with a round key, substitution, encryption with the next round key, and, finally, a Pseudo Hadamard Transform (PHT). The computations in a round shall be as shown in Figure 6.2 on page 780. The sub keys for round $r, r = 1, 2, \ldots, 8$ are denoted $K_{2r-1}[j]$, $K_{2r}[j]$, $j = 0, 1, \ldots, 15$. After the last round $K_{17}[j]$ is applied identically to all previous odd numbered keys.

6.2.2 The substitution boxes “e” and “l”

In Figure 6.2 on page 780 two boxes are shown, marked “e” and “l”. These boxes implement the same substitutions as are used in SAFER+; i.e. they implement

$$
\begin{aligned}
e, l \quad &: \quad \{0, \ldots, 255\} \rightarrow \{0, \ldots, 255\}, \\
e \quad &: \quad i \mapsto (45^i \pmod{257}) \pmod{256}, \\
l \quad &: \quad i \mapsto j \text{ s.t. } i = e(j).
\end{aligned}
$$

Their role, as in the SAFER+ algorithm, is to introduce non-linearity.

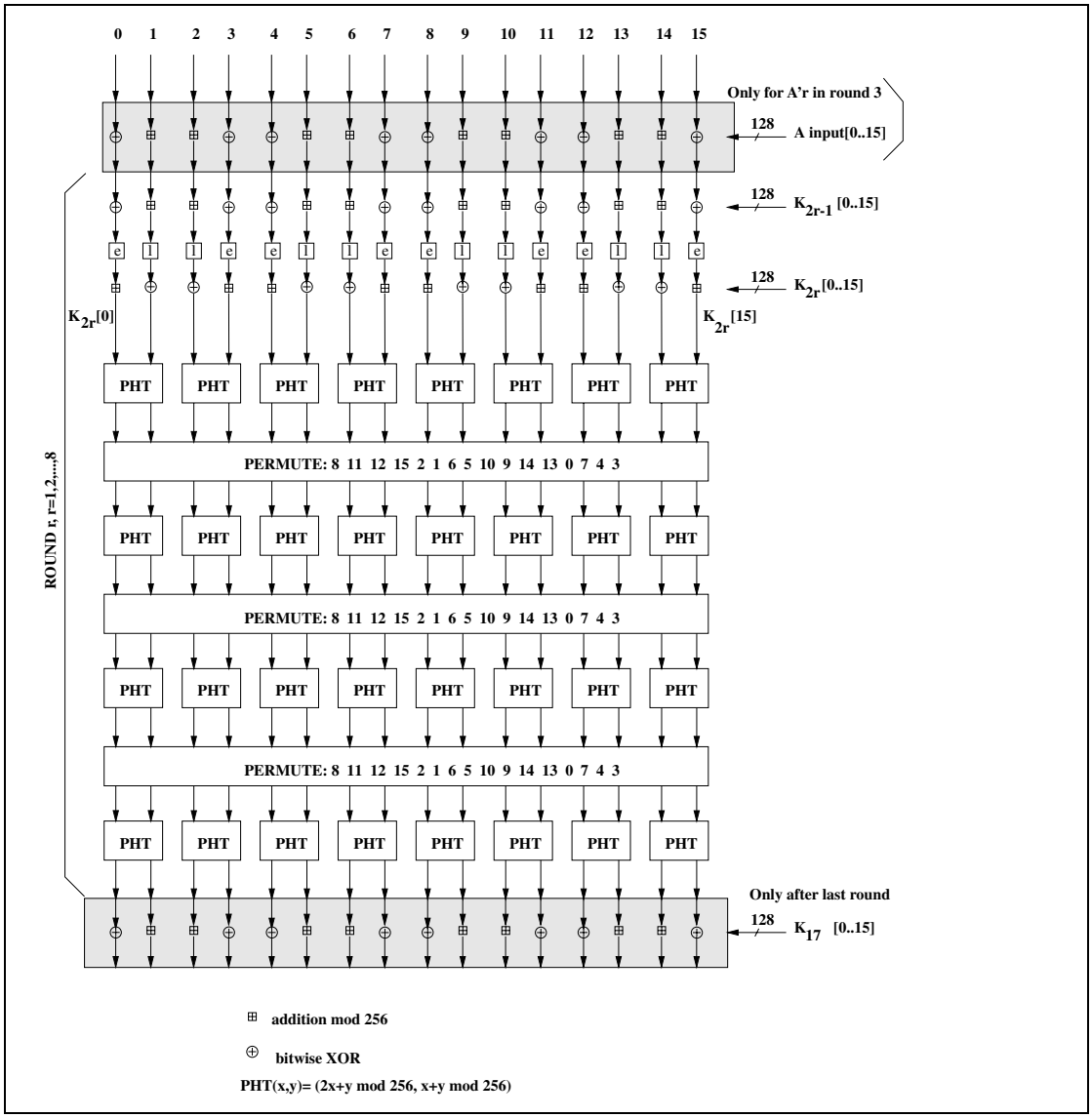

Figure 6.2: One round in A_r and A'_r. The permutation boxes show how input byte indices are mapped onto output byte indices. Thus, position 8 is mapped on position 0 (leftmost), position 11 is mapped on position 1, et cetera.

6.2.3 Key scheduling

In each round, 2 batches of 16 octet-wide keys are needed. These round keys are derived as specified by the key scheduling in SAFER+. Figure 6.3 on page 781 gives an overview of how the round keys $K_p[j]$ are determined. The bias vectors B_2, B_3, ..., B_{17} shall be computed according to following equation:

$$B_p[i] = ((45^{(45^{17p+i+1} \bmod 257)} \bmod 257) \bmod 256), \text{ for } i = 0, \ldots, 15. \qquad \text{(EQ 17)}$$

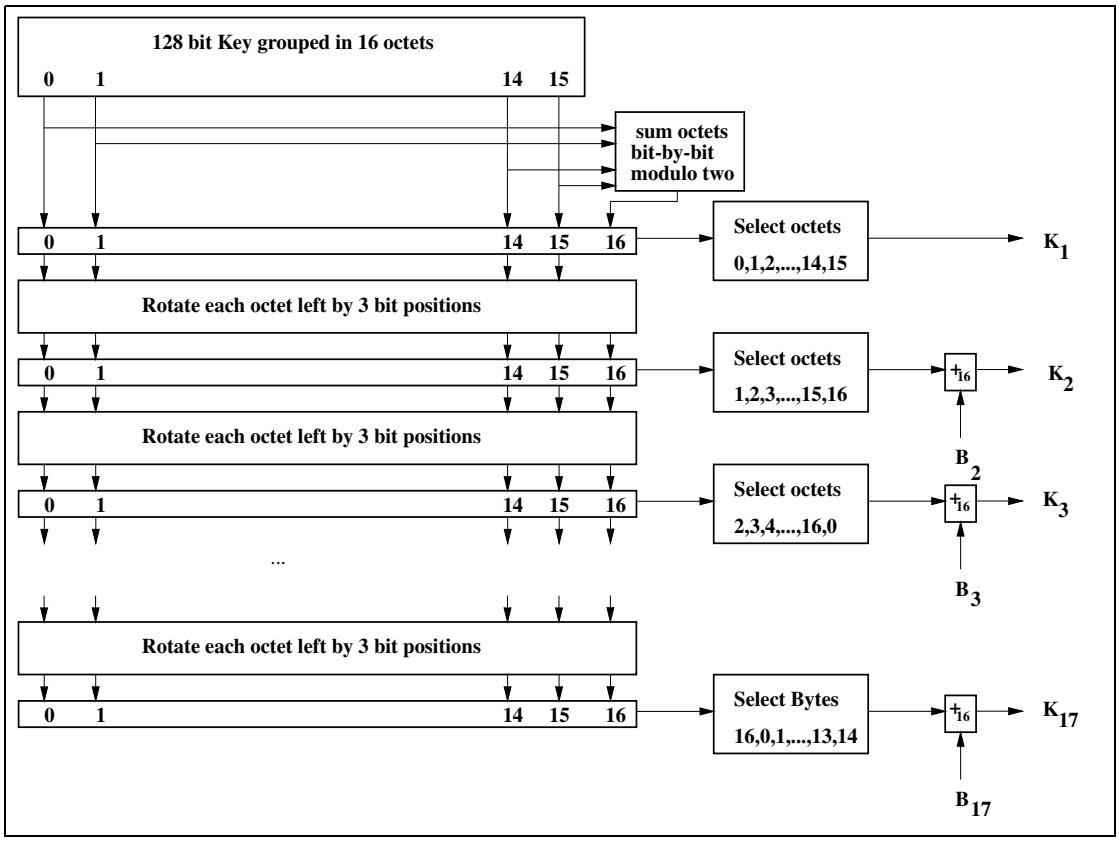

Figure 6.3: Key scheduling in A_r.

6.3 E_2-KEY GENERATION FUNCTION FOR AUTHENTICATION

The key used for authentication shall be derived through the procedure that is shown in Figure 6.4 on page 783. The figure shows two modes of operation for the algorithm. In the first mode, E_{21} produces a 128-bit kink key, K, using a 128-bit RAND value and a 48-bit address. This mode shall be utilized when creating unit keys and combination keys. In the second mode, E_{22} produces a 128-bit link key, K, using a 128-bit RAND value and an L octet user PIN. The second mode shall be used to create the initialization key, and also when a master key is to be generated.

When the initialization key is generated, the PIN is augmented with the BD_ADDR, see Section 3.2.1 on page 756 for which address to use. The augmentation shall always start with the least significant octet of the address immediately following the most significant octet of the PIN. Since the maximum length of the PIN used in the algorithm cannot exceed 16 octets, it is possible that not all octets of BD_ADDR will be used.

This key generating algorithm again exploits the cryptographic function. E_2 for mode 1 (denoted E_{21}) is computed according to following equations:

$$\begin{aligned} E_{21}\colon\ \{0,1\}^{128} \times \{0,1\}^{48} &\rightarrow \{0,1\}^{128} \\ (\mathrm{RAND},\ \mathrm{address}) &\mapsto A'_r(X, Y) \end{aligned} \qquad \text{(EQ 18)}$$

where (for mode 1)

$$\begin{cases} X = \mathrm{RAND}[0\ldots14] \cup (\mathrm{RAND}[15] \oplus 6) \\ Y = \bigcup_{i=0}^{15} \mathrm{address}[i \pmod 6] \end{cases} \qquad \text{(EQ 19)}$$

Let L be the number of octets in the user PIN. The augmenting is defined by

$$\mathrm{PIN}' = \begin{cases} \mathrm{PIN}[0\ldots L-1] \cup \mathrm{BD_ADDR}[0\ldots\min\{5, 15-L\}], & L < 16, \\ \mathrm{PIN}[0\ldots L-1], & L = 16, \end{cases} \qquad \text{(EQ 20)}$$

Then, in mode 2, E_2 (denoted E_{22}) is

$$\begin{aligned} E_{22}\colon\ \{0,1\}^{8L'} \times \{0,1\}^{128} \times \{1,2,\ldots,16\} &\rightarrow \{0,1\}^{128} \\ (\mathrm{PIN}',\ \mathrm{RAND},\ \mathrm{L}') &\mapsto A'_r(X, Y) \end{aligned} \qquad \text{(EQ 21)}$$

where

$$\begin{cases} X = \bigcup_{i=0}^{15} \mathrm{PIN}'[i \pmod{L'}], \\ Y = \mathrm{RAND}[0\ldots14] \cup (\mathrm{RAND}[15] \oplus L'), \end{cases} \qquad \text{(EQ 22)}$$

and $L' = \min\{16, L+6\}$ is the number of octets in PIN'.

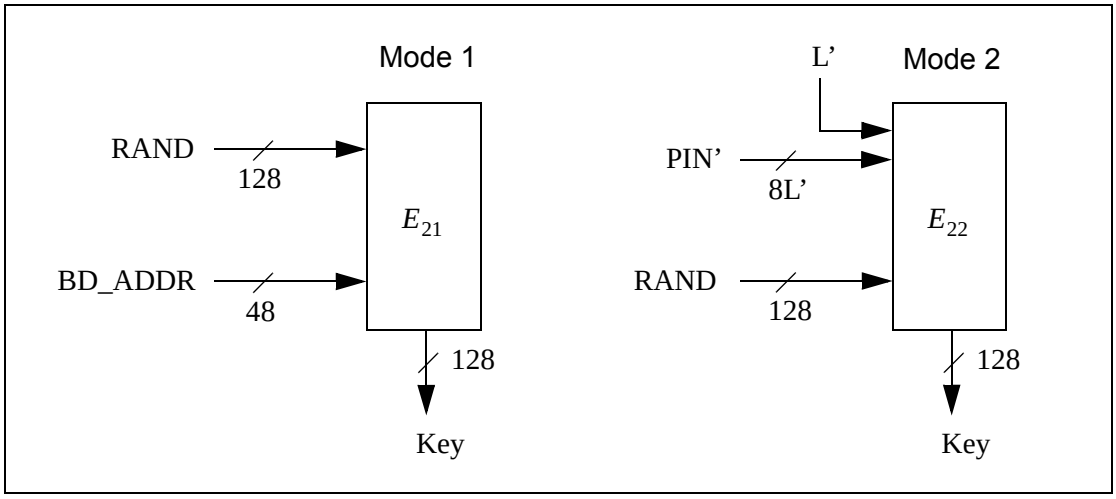

Figure 6.4: Key generating algorithm E_2 and its two modes. Mode 1 is used for unit and combination keys, while mode 2 is used for K_{init} and K_{master}.

6.4 E_3-KEY GENERATION FUNCTION FOR ENCRYPTION

The ciphering key K_C used by E_0 shall be generated by E_3. The function E_3 is constructed using A'_r as follows

$$E_3\colon \{0,1\}^{128} \times \{0,1\}^{128} \times \{0,1\}^{96} \rightarrow \{0,1\}^{128}$$
$$(K, \mathrm{RAND}, \mathrm{COF}) \mapsto Hash(K, \mathrm{RAND}, \mathrm{COF}, 12) \qquad \text{(EQ 23)}$$

where $Hash$ is the hash function as defined by (EQ 13) on page 777. The key length produced is 128 bits. However, before use within E_0, the encryption key K_C is shortened to the correct encryption key length, as described in Section 4.5 on page 769. A block scheme of E_3 is depicted in Figure 6.5.

The value of COF is determined as specified by equation (EQ 3) on page 759.

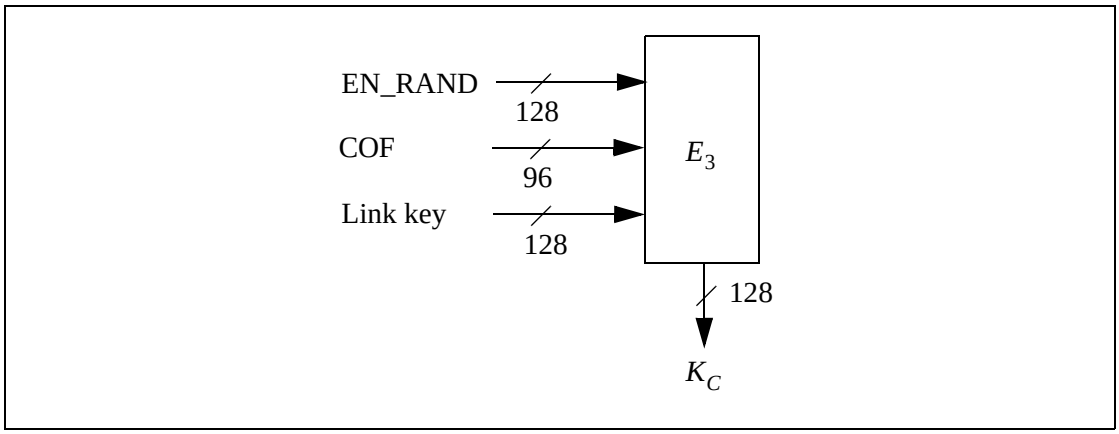

Figure 6.5: Generation of the encryption key.

7 LIST OF FIGURES

Figure 3.1: Generation of unit key. When the unit key has been exchanged, the initialization key is discarded in both devices. 757
Figure 3.2: Generating a combination key. The old link key (K) is discarded after the exchange of a new combination key has succeeded 758
Figure 3.3: Master link key distribution and computation of the corresponding encryption key. 761
Figure 4.1: Stream ciphering for Bluetooth with E0. 763
Figure 4.2: Functional description of the encryption procedure 766
Figure 4.3: Concept of the encryption engine. 767
Figure 4.4: Overview of the operation of the encryption engine. Between each start of a packet (TX or RX), the LFSRs are re-initialized. 768
Figure 4.5: Arranging the input to the LFSRs. 771
Figure 4.6: Distribution of the 128 last generated output symbols within the LFSRs. 772
Figure 5.1: Challenge-response for the Bluetooth. 773
Figure 5.2: Challenge-response for symmetric key systems. 774
Figure 6.1: Flow of data for the computation of E_1. 778
Figure 6.2: One round in and . The permutation boxes show how input byte indices are mapped onto output byte indices. Thus, position 8 is mapped on position 0 (leftmost), position 11 is mapped on position 1, et cetera. 780
Figure 6.3: Key scheduling in A_r. 781
Figure 6.4: Key generating algorithm E_2 and its two modes. Mode 1 is used for unit and combination keys, while mode 2 is used for K_{init} and K_{master}. 783
Figure 6.5: Generation of the encryption key. 783

8 LIST OF TABLES

Table 1.1: Entities used in authentication and encryption procedures.....749
Table 4.1: Possible encryption modes for a slave in possession of a master key.....765
Table 4.2: The four primitive feedback polynomials.....767
Table 4.3: The mappings *T1* and *T2*. 768
Table 4.4: Polynomials used when creating *K'c*. 770

Specification of the Bluetooth System

Wireless connections made easy

Core System Package
[Host volume]

Version 1.2
05 November 2003

1.2

Bluetooth®

Revision History

The Revision History is shown in the “Appendix” on page 53[vol. 0].

Contributors

The persons who contributed to this specification are listed in the “Appendix” on page 53[vol. 0].

Web Site

This specification can also be found on the official Bluetooth website: http://www.bluetooth.com

Disclaimer and Copyright Notice

The copyright in these specifications is owned by the Promoter Members of Bluetooth SIG, Inc. (“Bluetooth SIG”). Use of these specifications and any related intellectual property (collectively, the “Specification”), is governed by the Promoters Membership Agreement among the Promoter Members and Bluetooth SIG (the “Promoters Agreement”), certain membership agreements between Bluetooth SIG and its Adopter and Associate Members (the “Membership Agreements”) and the Bluetooth Specification Early Adopters Agreements (“1.2 Early Adopters Agreements”) among Early Adopter members of the unincorporated Bluetooth special interest group and the Promoter Members (the “Early Adopters Agreement”). Certain rights and obligations of the Promoter Members under the Early Adopters Agreements have been assigned to Bluetooth SIG by the Promoter Members.

Use of the Specification by anyone who is not a member of Bluetooth SIG or a party to an Early Adopters Agreement (each such person or party, a “Member”), is prohibited. The legal rights and obligations of each Member are governed by their applicable Membership Agreement, Early Adopters Agreement or Promoters Agreement. No license, express or implied, by estoppel or otherwise, to any intellectual property rights are granted herein.

Any use of the Specification not in compliance with the terms of the applicable Membership Agreement, Early Adopters Agreement or Promoters Agreement is prohibited and any such prohibited use may result in termination of the applicable Membership Agreement or Early Adopters Agreement and other liability permitted by the applicable agreement or by applicable law to Bluetooth SIG or any of its members for patent, copyright and/or trademark infringement.

THE SPECIFICATION IS PROVIDED “AS IS” WITH NO WARRANTIES WHATSOEVER, INCLUDING ANY WARRANTY OF MERCHANTABILITY, NONINFRINGEMENT, FITNESS FOR ANY PARTICULAR PURPOSE, SATISFACTORY QUALITY, OR REASONABLE SKILL OR CARE, OR ANY WARRANTY ARISING OUT OF ANY COURSE OF DEALING, USAGE, TRADE PRACTICE, PROPOSAL, SPECIFICATION OR SAMPLE.

Each Member hereby acknowledges that products equipped with the Bluetooth® technology (“Bluetooth® Products”) may be subject to various regulatory controls under the laws and regulations of various governments worldwide. Such laws and regulatory controls may govern, among other things, the combination, operation, use, implementation and distribution of Bluetooth® Products. Examples of such laws and regulatory controls include, but are not limited to, airline regulatory controls, telecommunications regulations, technology transfer controls and health and safety regulations. Each Member is solely responsible for the compliance by their Bluetooth® Products with any such laws and regulations and for obtaining any and all required authorizations, permits, or licenses for their Bluetooth® Products related to such regulations within the applicable jurisdictions. Each Member acknowledges that nothing in the Specification provides any information or assistance in connection with securing such compliance, authorizations or licenses. NOTHING IN THE SPECIFICATION CREATES ANY WARRANTIES, EITHER EXPRESS OR IMPLIED, REGARDING SUCH LAWS OR REGULATIONS.

ALL LIABILITY, INCLUDING LIABILITY FOR INFRINGEMENT OF ANY INTELLECTUAL PROPERTY RIGHTS OR FOR NONCOMPLIANCE WITH LAWS, RELATING TO USE OF THE SPECIFICATION IS EXPRESSLY DISCLAIMED. BY USE OF THE SPECIFICATION, EACH MEMBER EXPRESSLY WAIVES ANY CLAIM AGAINST BLUETOOTH SIG AND ITS PROMOTER MEMBERS RELATED TO USE OF THE SPECIFICATION.

Bluetooth SIG reserves the right to adopt any changes or alterations to the Specification as it deems necessary or appropriate and to adopt a process for adding new Bluetooth® profiles after the release of the Specification.

Copyright © 1999, 2000, 2001, 2002, 2003

Agere Systems, Inc.,
Ericsson Technology Licensing, AB,
IBM Corporation,
Intel Corporation,
Microsoft Corporation,
Motorola, Inc.,
Nokia Corporation,
Toshiba Corporation

*Third-party brands and names are the property of their respective owners.

TABLE OF CONTENTS

Part A
LOGICAL LINK CONTROL AND ADAPTATION PROTOCOL SPECIFICATION

Contents **17**

1 Introduction **21**
- 1.1 L2CAP Features 21
- 1.2 Assumptions 25
- 1.3 Scope 25
- 1.4 Terminology 26

2 General Operation **29**
- 2.1 Channel Identifiers 29
- 2.2 Operation Between Devices 29
- 2.3 Operation Between Layers 31
- 2.4 Modes of Operation 31

3 Data Packet Format **33**
- 3.1 Connection-oriented Channel in Basic L2CAP Mode 33
- 3.2 Connectionless Data Channel in Basic L2CAP Mode 34
- 3.3 Connection-oriented Channel in Retransmission/Flow Control Modes 35
  - 3.3.1 L2CAP header fields 35
  - 3.3.2 Control field (2 octets) 36
  - 3.3.3 L2CAP SDU length field (2 octets) 38
  - 3.3.4 Information payload field (0 to 65531 octets) 38
  - 3.3.5 Frame check sequence (2 octets) 39
  - 3.3.6 Invalid frame detection 40

4 Signalling Packet Formats **41**
- 4.1 Command Reject (code 0x01) 43
- 4.2 Connection Request (code 0x02) 44
- 4.3 Connection Response (code 0x03) 46
- 4.4 Configuration Request (code 0x04) 47
- 4.5 Configure Response (code 0x05) 50
- 4.6 Disconnection Request (code 0x06) 52
- 4.7 Disconnection Response (code 0x07) 53
- 4.8 Echo Request (code 0x08) 53
- 4.9 Echo Response (code 0x09) 54
- 4.10 Information Request (code 0x0A) 54
- 4.11 Information Response (code 0x0B) 55
- 4.12 Extended Feature Mask 56

5 Configuration Parameter Options 57
5.1 Maximum Transmission Unit (MTU) 57
5.2 Flush Timeout Option 59
5.3 Quality of Service (QoS) Option 60
5.4 Retransmission and Flow Control Option 64
6 State Machine 67
6.1 General rules for the state machine: 67
6.1.1 CLOSED state 68
6.1.2 WAIT_CONNECT_RSP state 69
6.1.3 WAIT_CONNECT state 69
6.1.4 CONFIG state 70
6.1.5 OPEN state 73
6.1.6 WAIT_DISCONNECT state 73
6.2 Timers events 74
6.2.1 RTX 74
6.2.2 ERTX 75
7 General Procedures 79
7.1 Configuration Process 79
7.1.1 Request path 80
7.1.2 Response path 80
7.2 Fragmentation and Recombination 81
7.2.1 Fragmentation of L2CAP PDUs 81
7.2.2 Recombination of L2CAP PDUs 82
7.3 Encapsulation of SDUs 83
7.3.1 Segmentation of L2CAP SDUs 83
7.3.2 Reassembly of L2CAP SDUs 84
7.3.3 Segmentation and fragmentation 84
7.4 Delivery of Erroneous L2CAP SDUs 85
7.5 Operation with Flushing 85
7.6 Connectionless Data Channel 86
8 Procedures for Flow Control and Retransmission 87
8.1 Information Retrieval 87
8.2 Function of PDU Types for Flow Control and Retransmission ... 87
8.2.1 Information frame (I-frame) 87
8.2.2 Supervisory Frame (S-frame) 87
8.3 Variables and Sequence Numbers 89
8.3.1 Sending peer 89
8.3.2 Receiving peer 91

8.4 Retransmission Mode 93
8.4.1 Transmitting frames....93
8.4.2 Receiving I-frames 95
8.4.3 I-frames pulled by the SDU reassembly function 95
8.4.4 Sending and receiving acknowledgements 96
8.4.5 Receiving REJ frames....97
8.4.6 Waiting acknowledgements....97
8.4.7 Exception conditions 97
8.5 Flow Control Mode....99
8.5.1 Transmitting I-frames 99
8.5.2 Receiving I-frames 100
8.5.3 I-frames pulled by the SDU reassembly function 100
8.5.4 Sending and receiving acknowledgements 100
8.5.5 Waiting acknowledgements....101
8.5.6 Exception conditions 101
9 List of Figures....103
10 List of Tables 105

Appendix A:
Configuration MSCs 107

Part B
SERVICE DISCOVERY PROTOCOL (SDP)

Contents **113**

1 Introduction **115**
1.1 General Description 115
1.2 Motivation 115
1.3 Requirements 115
1.4 Non-requirements and Deferred Requirements 116
1.5 Conventions 116
1.5.1 Bit And Byte Ordering Conventions 116

2 Overview **117**
2.1 SDP Client-Server Interaction 117
2.2 Service Record 118
2.3 Service Attribute 120
2.4 Attribute ID 120
2.5 Attribute Value 121
2.6 Service Class 121
2.6.1 A Printer Service Class Example 122
2.7 Searching for Services 123
2.7.1 UUID 123
2.7.2 Service Search Patterns 124
2.8 Browsing for Services 124
2.8.1 Example Service Browsing Hierarchy 125

3 Data Representation **127**
3.1 Data Element 127
3.2 Data Element Type Descriptor 127
3.3 Data Element Size Descriptor 128
3.4 Data Element Examples 129

4 Protocol Description **131**
4.1 Transfer Byte Order 131
4.2 Protocol Data Unit Format 131
4.3 Partial Responses and Continuation State 133
4.4 Error Handling 133
4.4.1 SDP_ErrorResponse PDU 134
4.5 ServiceSearch Transaction 135
4.5.1 SDP_ServiceSearchRequest PDU 135
4.5.2 SDP_ServiceSearchResponse PDU 136
4.6 ServiceAttribute Transaction 138
4.6.1 SDP_ServiceAttributeRequest PDU 138
4.6.2 SDP_ServiceAttributeResponse PDU 140

4.7 ServiceSearchAttribute Transaction 141
4.7.1 SDP_ServiceSearchAttributeRequest PDU 141
4.7.2 SDP_ServiceSearchAttributeResponse PDU 143
5 Service Attribute Definitions 145
5.1 Universal Attribute Definitions 145
5.1.1 ServiceRecordHandle Attribute 145
5.1.2 ServiceClassIDList Attribute 146
5.1.3 ServiceRecordState Attribute 146
5.1.4 ServiceID Attribute 146
5.1.5 ProtocolDescriptorList Attribute 147
5.1.6 BrowseGroupList Attribute 148
5.1.7 LanguageBaseAttributeIDList Attribute 148
5.1.8 ServiceInfoTimeToLive Attribute 149
5.1.9 ServiceAvailability Attribute 150
5.1.10 BluetoothProfileDescriptorList Attribute 150
5.1.11 DocumentationURL Attribute 151
5.1.12 ClientExecutableURL Attribute 151
5.1.13 IconURL Attribute 152
5.1.14 ServiceName Attribute 152
5.1.15 ServiceDescription Attribute 153
5.1.16 ProviderName Attribute 153
5.1.17 Reserved Universal Attribute IDs 153
5.2 ServiceDiscoveryServer Service Class Attribute Definitions 154
5.2.1 ServiceRecordHandle Attribute 154
5.2.2 ServiceClassIDList Attribute 154
5.2.3 VersionNumberList Attribute 154
5.2.4 ServiceDatabaseState Attribute 155
5.2.5 Reserved Attribute IDs 155
5.3 BrowseGroupDescriptor Service Class Attribute Definitions 155
5.3.1 ServiceClassIDList Attribute 155
5.3.2 GroupID Attribute 156
5.3.3 Reserved Attribute IDs 156

Appendix A:
Background Information 157

Appendix B:
Example SDP Transactions 158

Part C
GENERIC ACCESS PROFILE

Contents **173**
Foreword **177**

1 Introduction **179**
1.1 Scope 179
1.2 Symbols and conventions 179
1.2.1 Requirement status symbols 179
1.2.2 Signaling diagram conventions 180
1.2.3 Notation for timers and counters 180

2 Profile overview **181**
2.1 Profile stack 181
2.2 Configurations and roles 181
2.3 User requirements and scenarios 182
2.4 Profile fundamentals 183
2.5 Conformance 183

3 User interface aspects **185**
3.1 The user interface level 185
3.2 Representation of Bluetooth parameters 185
3.2.1 Bluetooth device address (BD_ADDR) 185
3.2.2 Bluetooth device name (the user-friendly name) 185
3.2.3 Bluetooth passkey (Bluetooth PIN) 186
3.2.4 Class of Device 187
3.3 Pairing 188

4 Modes **189**
4.1 Discoverability modes 189
4.1.1 Non-discoverable mode 190
4.1.2 Limited discoverable mode 190
4.1.3 General discoverable mode 191
4.2 Connectability modes 193
4.2.1 Non-connectable mode 193
4.2.2 Connectable mode 193
4.3 Pairing modes 195
4.3.1 Non-pairable mode 195
4.3.2 Pairable mode 195

5 Security aspects 197
5.1 Authentication 197
5.1.1 Purpose 197
5.1.2 Term on UI level 197
5.1.3 Procedure 198
5.1.4 Conditions 198
5.2 Security modes 198
5.2.1 Security mode 1 (non-secure) 200
5.2.2 Security mode 2 (service level enforced security) 200
5.2.3 Security modes 3 (link level enforced security) 200
6 Idle mode procedures 201
6.1 General inquiry 201
6.1.1 Purpose 201
6.1.2 Term on UI level 201
6.1.3 Description 202
6.1.4 Conditions 202
6.2 Limited inquiry 202
6.2.1 Purpose 202
6.2.2 Term on UI level 203
6.2.3 Description 203
6.2.4 Conditions 203
6.3 Name discovery 204
6.3.1 Purpose 204
6.3.2 Term on UI level 204
6.3.3 Description 204
6.3.4 Conditions 205
6.4 Device discovery 205
6.4.1 Purpose 205
6.4.2 Term on UI level 205
6.4.3 Description 206
6.4.4 Conditions 206
6.5 Bonding 206
6.5.1 Purpose 206
6.5.2 Term on UI level 206
6.5.3 Description 207
6.5.4 Conditions 208

7 Establishment procedures 209
7.1 Link establishment 209
7.1.1 Purpose 209
7.1.2 Term on UI level 209
7.1.3 Description 210
7.1.4 Conditions 211
7.2 Channel establishment 212
7.2.1 Purpose 212
7.2.2 Term on UI level 212
7.2.3 Description 212
7.2.4 Conditions 213
7.3 Connection establishment 214
7.3.1 Purpose 214
7.3.2 Term on UI level 214
7.3.3 Description 214
7.3.4 Conditions 215
7.4 Establishment of additional connection 215
8 Definitions 217
8.1 General definitions 217
8.2 Connection-related definitions 217
8.3 Device-related definitions 218
8.4 Procedure-related definitions 219
8.5 Security-related definitions 219
9 Appendix A (Normative): Timers and constants 221
10 Appendix B (Informative): Information flows of related procedures 223
11 References 227

Part D
TEST SUPPORT

Contents **231**

1 Test Methodology **233**
1.1 Test Scenarios 233
1.1.1 Test setup 233
1.1.2 Transmitter Test 234
1.1.3 LoopBack test 239
1.1.4 Pause test 242
1.2 References 242

2 Test Control Interface (TCI) **243**
2.1 Introduction 243
2.1.1 Terms used 243
2.1.2 Usage of the interface 243
2.2 TCI Configurations 244
2.2.1 Bluetooth RF requirements 244
2.2.2 Bluetooth protocol requirements 245
2.2.3 Bluetooth profile requirements 246
2.3 TCI Configuration and Usage 247
2.3.1 Transport layers 247
2.3.2 Baseband and link manager qualification 248
2.3.3 HCI qualification 250

Core System Package [Host volume]

Part A

LOGICAL LINK CONTROL AND ADAPTATION PROTOCOL SPECIFICATION

The Bluetooth logical link control and adaptation protocol (L2CAP) supports higher level protocol multiplexing, packet segmentation and reassembly, and the conveying of quality of service information. The protocol state machine, packet format and composition are described in this document.

CONTENTS

1 Introduction 21
1.1 L2CAP Features 21
1.2 Assumptions 25
1.3 Scope 25
1.4 Terminology 26
2 General Operation 29
2.1 Channel Identifiers 29
2.2 Operation Between Devices 29
2.3 Operation Between Layers 31
2.4 Modes of Operation 31
3 Data Packet Format 33
3.1 Connection-oriented Channel in Basic L2CAP Mode 33
3.2 Connectionless Data Channel in Basic L2CAP Mode 34
3.3 Connection-oriented Channel in Retransmission/Flow Control Modes 35
3.3.1 L2CAP header fields 35
3.3.2 Control field (2 octets) 36
3.3.3 L2CAP SDU length field (2 octets) 38
3.3.4 Information payload field (0 to 65531 octets) 38
3.3.5 Frame check sequence (2 octets) 39
3.3.6 Invalid frame detection 40
4 Signalling Packet Formats 41
4.1 Command Reject (code 0x01) 43
4.2 Connection Request (code 0x02) 44
4.3 Connection Response (code 0x03) 46
4.4 Configuration Request (code 0x04) 47
4.5 Configuration Response (code 0x05) 50
4.6 Disconnection Request (code 0x06) 52
4.7 Disconnection Response (code 0x07) 53
4.8 Echo Request (code 0x08) 53
4.9 Echo Response (code 0x09) 54
4.10 Information Request (code 0x0A) 54
4.11 Information Response (code 0x0B) 55
4.12 Extended Feature Mask 56
5 Configuration Parameter Options 57
5.1 Maximum Transmission Unit (MTU) 57
5.2 Flush Timeout Option 59
5.3 Quality of Service (QoS) Option 60
5.4 Retransmission and Flow Control Option 64

6 State Machine 67
6.1 General rules for the state machine: 67
6.1.1 CLOSED state 68
6.1.2 WAIT_CONNECT_RSP state 69
6.1.3 WAIT_CONNECT state 69
6.1.4 CONFIG state 70
6.1.5 OPEN state 73
6.1.6 WAIT_DISCONNECT state 73
6.2 Timers events 74
6.2.1 RTX 74
6.2.2 ERTX 75
7 General Procedures 79
7.1 Configuration Process 79
7.1.1 Request path 80
7.1.2 Response path 80
7.2 Fragmentation and Recombination 81
7.2.1 Fragmentation of L2CAP PDUs 81
7.2.2 Recombination of L2CAP PDUs 82
7.3 Encapsulation of SDUs 83
7.3.1 Segmentation of L2CAP SDUs 83
7.3.2 Reassembly of L2CAP SDUs 84
7.3.3 Segmentation and fragmentation 84
7.4 Delivery of Erroneous L2CAP SDUs 85
7.5 Operation with Flushing 85
7.6 Connectionless Data Channel 86
8 Procedures for Flow Control and Retransmission 87
8.1 Information Retrieval 87
8.2 Function of PDU Types for Flow Control and Retransmission ... 87
8.2.1 Information frame (I-frame) 87
8.2.2 Supervisory Frame (S-frame) 87
8.2.2.1 Receiver Ready (RR) 87
8.2.2.2 Reject (REJ) 88
8.3 Variables and Sequence Numbers 89
8.3.1 Sending peer 89
8.3.1.1 Send sequence number TxSeq 89
8.3.1.2 Send state variable NextTXSeq 89
8.3.1.3 Acknowledge state variable ExpectedAckSeq 90

8.3.2 Receiving peer 91
8.3.2.1 Receive sequence number ReqSeq 91
8.3.2.2 Receive state variable, ExpectedTxSeq 91
8.3.2.3 Buffer state variable BufferSeq 91
8.4 Retransmission Mode 93
8.4.1 Transmitting frames 93
8.4.1.1 Last received R was set to zero 93
8.4.1.2 Last received R was set to one 95
8.4.2 Receiving I-frames 95
8.4.3 I-frames pulled by the SDU reassembly function 95
8.4.4 Sending and receiving acknowledgements 96
8.4.4.1 Sending acknowledgements 96
8.4.4.2 Receiving acknowledgements 96
8.4.5 Receiving REJ frames 97
8.4.6 Waiting acknowledgements 97
8.4.7 Exception conditions 97
8.4.7.1 TxSeq Sequence error 97
8.4.7.2 ReqSeq Sequence error 98
8.4.7.3 Timer recovery error 98
8.4.7.4 Invalid frame 98
8.5 Flow Control Mode 99
8.5.1 Transmitting I-frames 99
8.5.2 Receiving I-frames 100
8.5.3 I-frames pulled by the SDU reassembly function 100
8.5.4 Sending and receiving acknowledgements 100
8.5.4.1 Sending acknowledgements 100
8.5.4.2 Receiving acknowledgements 100
8.5.5 Waiting acknowledgements 101
8.5.6 Exception conditions 101
8.5.6.1 TxSeq Sequence error 101
8.5.6.2 ReqSeq Sequence error 102
8.5.6.3 Timer recovery error 102
8.5.6.4 Invalid frame 102

9 List of Figures 103

10 List of Tables 105

Appendix A:
Configuration MSCs 107

1 INTRODUCTION

This section of the Bluetooth Specification defines the Logical Link Control and Adaptation Layer Protocol, referred to as L2CAP. L2CAP is layered over the Link Controller Protocol and resides in the data link layer as shown in Figure 1.1. L2CAP provides connection-oriented and connectionless data services to upper layer protocols with protocol multiplexing capability, segmentation and reassembly operation, and group abstractions. L2CAP permits higher level protocols and applications to transmit and receive upper layer data packets (L2CAP Service Data Units, SDU) up to 64 kilobytes in length. L2CAP also permits per-channel flow control and retransmission via the Flow Control and Retransmission Modes.

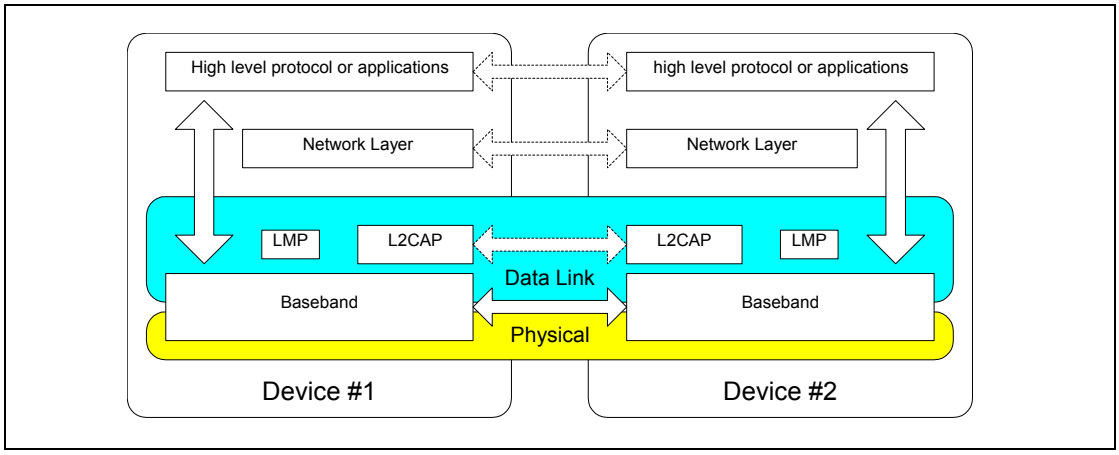

Figure 1.1: L2CAP within protocol layers

The L2CAP layer provides logical channels, named L2CAP channels, which are mapped to L2CAP logical links supported by an ACL logical transport, see baseband specification [vol.2, part B] Section 4.4 on page 86.

1.1 L2CAP FEATURES

The functional requirements for L2CAP include protocol/channel multiplexing, segmentation and reassembly (SAR), per-channel flow control, error control and group management. Figure 1.2 on page 22 illustrates how L2CAP data flows fit into the Bluetooth Protocol Stack. L2CAP lies above the Link Controller Protocol and interfaces with other communication protocols such as the Bluetooth Service Discovery Protocol (SDP), RFCOMM, Telephony Control (TCS) and Bluetooth Network Encapsulation Protocol (BNEP). Voice-quality channels for audio and telephony applications and synchronous transparent connections are usually run over synchronous logical transports, see [vol.2, part B] Section 4.3 on page 86. Packetized audio data, such as IP Telephony, may be sent using communication protocols running over L2CAP.

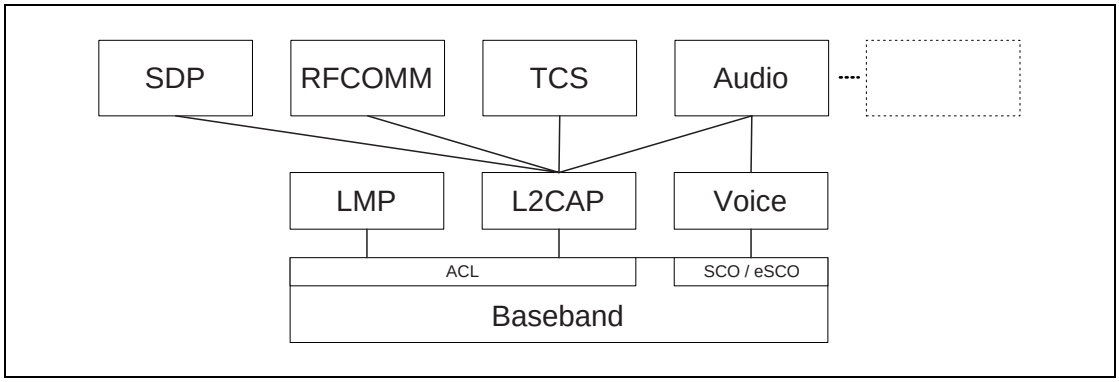

Figure 1.2: L2CAP data flows in Bluetooth Protocol Architecture

Figure 1.3 on page 22 breaks down L2CAP into its architectural components. The Channel Manager provides the control plane functionality and is responsible for all internal signalling, L2CAP peer-to-peer signalling and signalling with higher and lower layers. It performs the state machine functionality described in Section 6 on page 67 and uses message formats described in Section 4 on page 41, Section 5 on page 57. The Retransmission and Flow Control block provides per-channel flow control and optional retransmission for applications that require it. The Resource Manager is responsible for providing a frame relay service to the Channel Manager, the Retransmission and Flow Control block and those application data streams that do not require Retransmission and Flow Control services. It is responsible for coordinating the transmission and reception of packets related to multiple L2CAP channels over the facilities offered at the lower layer interface.

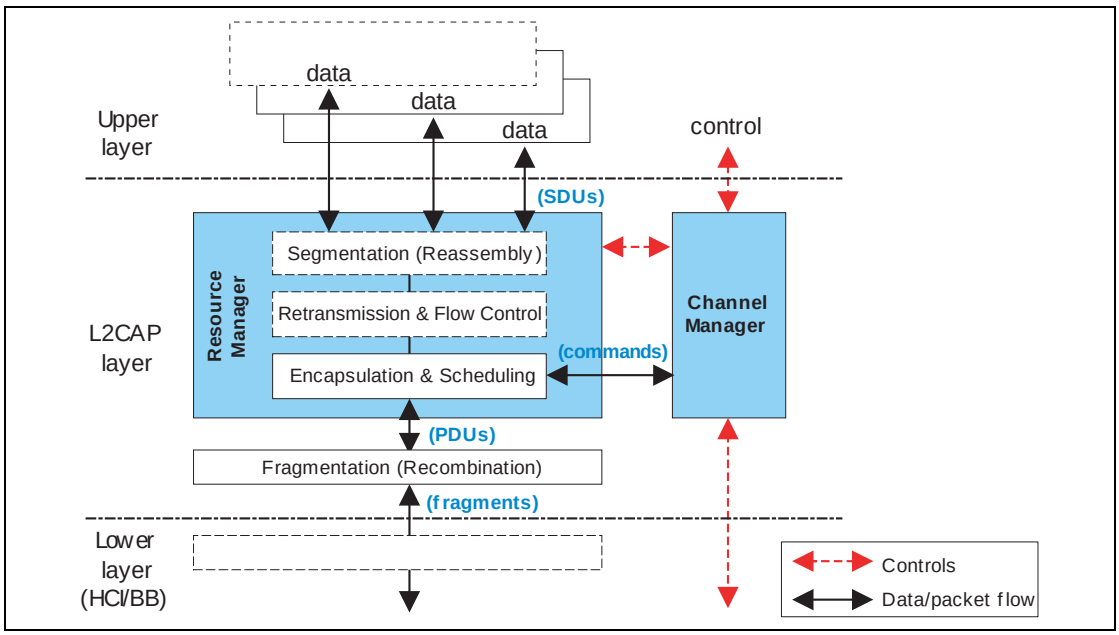

Figure 1.3: L2CAP architectural blocks

- *Protocol/channel multiplexing*

  L2CAP supports multiplexing because the Baseband Protocol does not support any 'type' field identifying the higher layer protocol being multiplexed above it.

  During channel setup, protocol multiplexing capability is used to route the connection request to the correct upper layer protocol.

  For data transfer, logical channel multiplexing is needed to distinguish between multiple upper layer entities. There may be more than one upper layer entity using the same protocol.

- *Segmentation and reassembly*

  With the frame relay service offered by the Resource Manager, the length of transport frames is controlled by the individual applications running over L2CAP. Many multiplexed applications are better served if L2CAP has control over the PDU length. This provides the following benefits:

  a) Segmentation will allow the interleaving of application data units in order to satisfy latency requirements.

  b) Memory and buffer management is easier when L2CAP controls the packet size.

  c) Error correction by retransmission can be made more efficient.

  d) The amount of data that is destroyed when an L2CAP PDU is corrupted or lost can be made smaller than the application's data unit.

  e) The application is decoupled from the segmentation required to map the application packets into the lower layer packets.

- *Flow control per L2CAP channel*

  When several data streams run over the same L2CAP logical link, using separate L2CAP channels, each channel may require individual flow control. Also L2CAP provides flow control services to profiles or applications that need flow control and can avoid having to implement it. Due to the delays between the L2CAP layers, stop-and-go flow control as employed in the baseband is not sufficient. A window based flow control scheme is provided. The use of flow control is an optional aspect of the L2CAP protocol.

- *Error control and retransmissions*

  Some applications require a residual error rate much smaller than the baseband can deliver. L2CAP includes optional error checks and retransmissions of L2CAP PDUs. The error checking in L2CAP protects against errors due to the baseband falsely accepting packet headers and due to failures of the HEC or CRC error checks on the baseband packets. Retransmission Mode also protects against loss of packets due to flush on the same logical transport. The error control works in conjunction with flow control in the sense that the flow control mechanism will throttle retransmissions as well as first transmissions. The use of error control and retransmission procedures is optional.

- *Fragmentation and Recombination*

  The lower layers have limited transmission capabilities and may require fragment sizes different from those created by L2CAP segmentation. Therefore layers below L2CAP may further fragment and recombine L2CAP PDUs to create fragments which fit each layer capabilities. During transmission of an L2CAP PDU, many different levels of fragmentation and recombination may occur in both peer devices.

  The HCI driver or controller may fragment L2CAP PDUs to honor packet size constraints of a host controller interface transport scheme. This results in HCI data packet payloads carrying start and continuation fragments of the L2CAP PDU. Similarly the link controller may fragment L2CAP PDUs to map them into baseband packets. This results in baseband packet payloads carrying start and continuation fragments of the L2CAP PDU.

  Each layer of the protocol stack may pass on diffferent sized fragments of L2CAP PDUs, and the size of fragments created by a layer may be different in each peer device. However the PDU is fragmented within the stack, the receiving L2CAP entity still recombines the fragments to obtain the original L2CAP PDU.

- *Quality of Service*

  The L2CAP connection establishment process allows the exchange of information regarding the quality of service (QoS) expected between two Bluetooth devices. Each L2CAP implementation monitors the resources used by the protocol and ensures that QoS contracts are honored.

1.2 ASSUMPTIONS

The protocol is designed based on the following assumptions:

1. The ACL logical transport and L2CAP logical link between two devices is set up using the Link Manager Protocol. The baseband provides orderly delivery of data packets, although there might be individual packet corruption and duplicates. No more than 1 unicast ACL logical transport exists between any two devices.
2. The baseband always provides the impression of full-duplex communication channels. This does not imply that all L2CAP communications are bi-directional. Multicasts and unidirectional traffic (e.g., video) do not require duplex channels.
3. The L2CAP layer provides a channel with a degree of reliability based on the mechanisms available at the baseband layer and with optional additional packet segmentation and error detection that can be enabled in the enhanced L2CAP layer. The baseband performs data integrity checks and resends data until it has been successfully acknowledged or a timeout occurs. Because acknowledgements may be lost, timeouts may occur even after the data has been successfully sent. The link controller protocol uses a 1-bit sequence number. Note that the use of baseband broadcast packets is prohibited if reliability is required, since all broadcasts start the first segment of an L2CAP packet with the same sequence bit.
4. Some applications will expect independent flow control, independence from the effects of other traffic and, in some cases, better error control than the baseband provides. The Flow and Error Control block provides two modes. Retransmission Mode offers segmentation, flow control and L2CAP PDU retransmissions. Flow control mode offers just the segmentation and flow control functions. If Basic L2CAP mode is chosen, the Flow and Error Control block is not used.

1.3 SCOPE

The following features are outside the scope of L2CAP's responsibilities:

- L2CAP does not transport audio or transparent synchronous data designated for SCO or eSCO logical transports.
- L2CAP does not support a reliable multicast channel. See Section 3.2 on page 34.
- L2CAP does not support the concept of a global group name.

1.4 TERMINOLOGY

The following formal definitions apply:

Term	Description
Upper layer	The system layer above the L2CAP layer, which exchanges data with L2CAP in the form of SDUs. The upper layer may be represented by an application or higher protocol entity known as the Service Level Protocol. The interface of the L2CAP layer with the upper layer is not specified.
Lower layer	The system layer below the L2CAP layer, which exchanges data with the L2CAP layer in the form of PDUs, or fragments of PDUs. The lower layer is mainly represented within the Bluetooth Controller, however a Host Controller Interface (HCI) may be involved, such that an HCI host driver could also be seen as the lower layer. Except for the HCI functional specification (in case HCI is involved) the interface between L2CAP and the lower layer is not specified.
L2CAP channel	The logical connection between two endpoints in peer devices, characterized by their Channel Identifiers (CID), which is multiplexed on the L2CAP logical link, which is supported by an ACL logical transport, see [vol.2, part B] Section 4.4 on page 86
SDU, or L2CAP SDU	Service Data Unit: a packet of data that L2CAP exchanges with the upper layer and transports transparently over an L2CAP channel using the procedures specified here. The term SDU is associated with data originating from upper layer entities only, i.e. does not include any protocol information generated by L2CAP procedures.
Segment, or SDU segment	A part of an SDU, as resulting from the Segmentation procedure. An SDU may be split into one or more segments. Note: this term is relevant only to the Retransmission Mode and Flow Control Mode, not to the Basic L2CAP Mode.
Segmentation	A procedure used in the L2CAP Retransmission and Flow Control Modes, resulting in an SDU being split into one or more smaller units, called Segments, as appropriate for the transport over an L2CAP channel. Note: this term is relevant only to the Retransmission Mode and Flow Control Mode, not to the Basic L2CAP Mode.
Reassembly	The reverse procedure corresponding to Segmentation, resulting in an SDU being re-established from the segments received over an L2CAP channel, for use by the upper layer. Note that the interface between the L2CAP and the upper layer is not specified; therefore, reassembly may actually occur within an upper layer entity although it is conceptually part of the L2CAP layer. Note: this term is relevant only to the Retransmission Mode and Flow Control Mode, not to the Basic L2CAP Mode.
PDU, or L2CAP PDU	Protocol Data Unit a packet of data containing L2CAP protocol information fields, control information, and/or upper layer information data. A PDU is always started by a Basic L2CAP header. Types of PDUs are: B-frames, I-frames, S-frames, C-frames and G-frames.

Table 1.1: Terminology

Term	Description
Basic L2CAP header	Minimum L2CAP protocol information that is present in the beginning of each PDU: a length field and a field containing the Channel Identifier (CID)
Basic information frame (B-frame)	A B-frame is a PDU used in the Basic L2CAP mode for L2CAP data packets. It contains a complete SDU as its payload, encapsulated by a basic L2CAP header.
Information frame (I-frame)	An I-frame is a PDU used in the Retransmission Mode and the Flow Control Mode. It contains an SDU segment and additional protocol information, encapsulated by a basic L2CAP header
Supervisory frame (S-frame)	An S-frame is a PDU used in the Retransmission Mode and the Flow Control Mode. It contains protocol information only, encapsulated by a basic L2CAP header, and no SDU data.
Control frame (C-frame)	A C-frame is a PDU that contains L2CAP signalling messages exchanged between the peer L2CAP entities. C-frames are exclusively used on the L2CAP signalling channel.
Group frame (G-frame)	G-frame is a PDU exclusively used on Connectionless L2CAP channels in the Basic L2CAP mode. It contains a complete SDU as its payload, encapsulated by a specific header.
Fragment	A part of a PDU, as resulting from a fragmentation operation. Fragments are used only in the delivery of data to and from the lower layer. They are not used for peer-to-peer transportation. A fragment may be a Start or Continuation Fragment with respect to the L2CAP PDU. A fragment does not contain any protocol information beyond the PDU; the distinction of start and continuation fragments is transported by lower layer protocol provisions. Note: Start Fragments always begin with the Basic L2CAP header of a PDU.
Fragmentation	A procedure used to split L2CAP PDUs to smaller parts, named fragments, appropriate for delivery to the lower layer transport. Although described within the L2CAP layer, fragmentation may actually occur in an HCI host driver, and/or in the Controller, to accomodate the L2CAP PDU transport to HCI data packet or baseband packet sizes. Fragmentation of PDUs may be applied in all L2CAP modes. Note: in version 1.1, Fragmentation and Recombination was referred to as “Segmentation and Reassembly“.
Recombination	The reverse procedure corresponding to fragmentation, resulting in an L2CAP PDU re-established from fragments. In the receive path, full or partial recombination operations may occur in the Controller and/or the Host, and the location of recombination does not necessarily correspond to where fragmentations occurs on the transmit side.
Maximum Transmission Unit (MTU)	The maximum size of payload data, in octets, that the upper layer entity is capable of accepting, i.e. the MTU corresponds to the maximum SDU size.

Table 1.1: Terminology

Term	Description
Maximum PDU payload Size (MPS)	The maximum size of payload data in octets that the L2CAP layer entity is capable of accepting, i.e. the MPS corresponds to the maximum PDU payload size. Note: in the absence of segmentation, or in the Basic L2CAP Mode, the Maximum Transmission Unit is the equivalent to the Maximum PDU payload Size and shall be made equal in the configuration parameters.
Signalling MTU (MTU_{sig})	The maximum size of command information that the L2CAP layer entity is capable of accepting. The MTU_{sig}, refers to the signalling channel only and corresponds to the maximum size of a C-frame, excluding the Basic L2CAP header. The MTU_{sig} value of a peer is discovered when a C-frame that is too large is rejected by the peer.
Connectionless MTU (MTU_{cnl})	The maximum size of the connection packet information that the L2CAP layer entity is capable of accepting. The MTU_{cnl} refers to the connectionless channel only and corresponds to the maximum G-frame, excluding the Basic L2CAP header. The MTU_{cnl} of a peer can be discovered by sending an Information Request.
MaxTransmit	In Retransmission mode, MaxTransmit controls the number of transmissions of a PDU that L2CAP is allowed to try before assuming that the PDU (and the link) is lost. The minimum value is 1 (only 1 transmission permitted). Note: Setting MaxTransmit to 1 prohibits PDU retransmissions. Failure of a single PDU will cause the link to drop. By comparison, in Flow Control mode, failure of a single PDU will not necessarily cause the link to drop.

Table 1.1: Terminology

2 GENERAL OPERATION

L2CAP is based around the concept of *'channels'*. Each one of the endpoints of an L2CAP channel is referred to by a *channel identifier (CID).*

2.1 CHANNEL IDENTIFIERS

A channel identifier (CID) is the local name representing a logical channel endpoint on the device. The null identifier (0x0000) is an illegal identifier and shall never be used as a destination endpoint. Identifiers from 0x0001 to 0x003F are reserved for specific L2CAP functions. Implementations are free to manage the remaining CIDs in a manner best suited for that particular implementation, with the provision that two simultaneously active L2CAP channels shall not share the same CID. Table 2.1 on page 29 summarizes the definition and partitioning of the CID name space.

CID assignment is relative to a particular device and a device can assign CIDs independently from other devices (unless it needs to use any of the reserved CIDs shown in the table below). Thus, even if the same CID value has been assigned to (remote) channel endpoints by several remote devices connected to a single local device, the local device can still uniquely associate each remote CID with a different device.

CID	Description
0x0000	Null identifier
0x0001	Signalling channel
0x0002	Connectionless reception channel
0x0003-0x003F	Reserved
0x0040-0xFFFF	Dynamically allocated

Table 2.1: CID name space

2.2 OPERATION BETWEEN DEVICES

Figure 2.1 on page 30 illustrates the use of CIDs in a communication between corresponding peer L2CAP entities in separate devices. The connection-oriented data channels represent a connection between two devices, where a CID identifies each endpoint of the channel. The connectionless channels restrict data flow to a single direction. These channels are used to support a channel 'group' where the CID on the source represents one or more remote devices. There are also a number of CIDs reserved for special purposes. The signalling channel is one example of a reserved channel. This channel is used to create and establish connection-oriented data channels and to negotiate changes in the characteristics of connection oriented and connectionless channels. Support for a signalling channel within an L2CAP entity is mandatory.

Note: it is assumed that an L2CAP signalling channel is available immediately when an ACL logical transport is established between two devices, and L2CAP traffic is enabled on the L2CAP logical link.
Another CID is reserved for all incoming connectionless data traffic. In the example below, a CID is used to represent a group consisting of device #3 and #4. Traffic sent from this channel ID is directed to the remote channel reserved for connectionless data traffic.

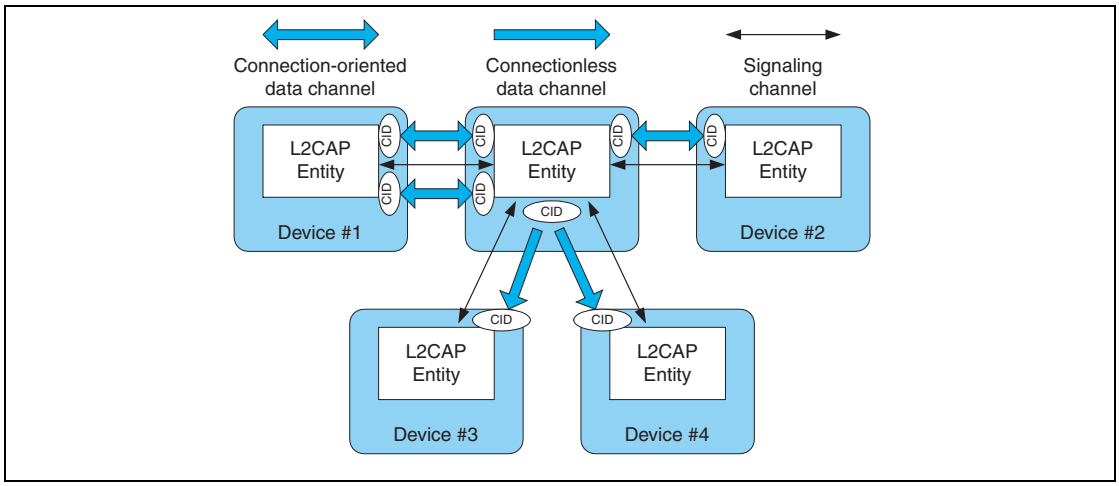

Figure 2.1: Channels between devices

Table 2.2 on page 30 describes the various channels and their source and destination identifiers. A CID is allocated to identify the local endpoint and shall be in the range 0x0040 to 0xFFFF. Section 6 on page 67 describes the state machine associated with each connection-oriented channel. Section 3.1 on page 33 describes the packet format associated with bi-directional channels and Section 3.2 on page 34 describes the packet format associated with uni-directional channels.

Channel Type	Local CID (sending)	Remote CID (receiving)
Connection-oriented	Dynamically allocated	Dynamically allocated
Connectionless data	Dynamically allocated	0x0002 (fixed)
Signalling	0x0001 (fixed)	0x0001 (fixed)

Table 2.2: Types of Channel Identifiers

2.3 OPERATION BETWEEN LAYERS

L2CAP implementations should follow the general architecture described below. L2CAP implementations transfer data between upper layer protocols and the lower layer protocol. This document lists a number of services that should be exported by any L2CAP implementation. Each implementation shall also support a set of signalling commands for use between L2CAP implementations. L2CAP implementations should also be prepared to accept certain types of events from lower layers and generate events to upper layers. How these events are passed between layers is implementation specific.

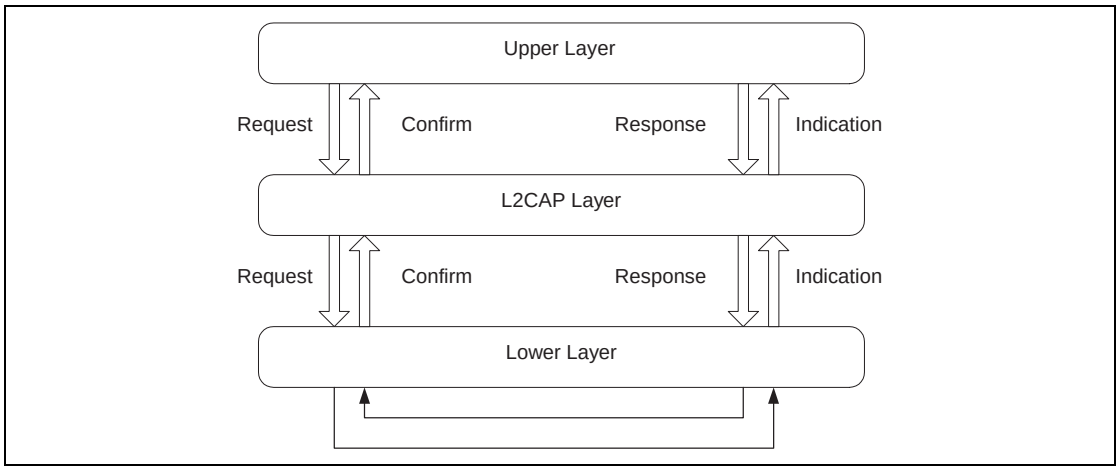

Figure 2.2: L2CAP transaction model.

2.4 MODES OF OPERATION

L2CAP may operate in one of three different modes as selected for each L2CAP channel by an upper layer.

The modes are:

- Basic L2CAP Mode (equivalent to L2CAP specification in Bluetooth v1.1) [1]
- Flow Control Mode
- Retransmission Mode

The modes are enabled using the configuration procedure. The Basic L2CAP Mode is the default mode, which is used when no other mode is agreed.

In Flow Control and Retransmission modes, PDUs exchanged with a peer entity are numbered and acknowledged. The sequence numbers in the PDUs are used to control buffering, and a TxWindow size is used to limit the required buffer space and/or provide a method for flow control. In addition to the window size, the Token Bucket size parameter of the flow specification can be used to

1. Specification of the Bluetooth System v1.1 (Feb 22nd 2001): volume 1, part D.

dimension the buffers; in particular on channels that do not use flow and error control.

In Flow Control Mode no retransmissions take place, but missing PDUs are detected and can be reported as lost.

In Retransmission Mode a timer is used to ensure that all PDUs are delivered to the peer, by retransmiting PDUs as needed. A go-back-n repeat mechanism is used to simplify the protocol and limit the buffering requirements.

3 DATA PACKET FORMAT

L2CAP is packet-based but follows a communication model based on *channels*. A channel represents a data flow between L2CAP entities in remote devices. Channels may be connection-oriented or connectionless.
All packet fields shall use Little Endian byte order.

3.1 CONNECTION-ORIENTED CHANNEL IN BASIC L2CAP MODE

Figure 3.1 on page 33 illustrates the format of the L2CAP PDU within a connection-oriented channel. In basic L2CAP mode, the L2CAP PDU on a connection-oriented channel is also referred to as a "B-frame".

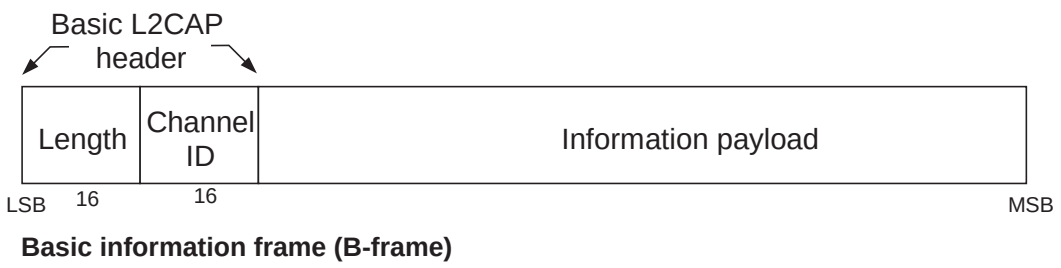

Figure 3.1: PDU format in Basic L2CAP mode on connection-oriented channels (field sizes in bits)

The fields shown are:

- *Length: 2 octets (16 bits)*

  Length indicates the size of the information payload in octets, excluding the length of the L2CAP header. The length of an information payload can be up to 65535 octets. The Length field is used for recombination and serves as a simple integrity check of the recombined L2CAP packet on the receiving end.

- *Channel ID: 2 octets*

  The channel ID (CID) identifies the destination channel endpoint of the packet.

- *Information payload: 0 to 65535 octets*

  This contains the payload received from the upper layer protocol (outgoing packet), or delivered to the upper layer protocol (incoming packet). The MTU is determined during channel configuration (see Section 5.1 on page 57). The minimum supported MTU for the signalling PDUs (MTU_{sig}) is 48 octets (see Section 4 on page 41).

3.2 CONNECTIONLESS DATA CHANNEL IN BASIC L2CAP MODE

Figure 3.2 illustrates the L2CAP PDU format within a connectionless data channel. Here, the L2CAP PDU is also referred to as a "G-frame".

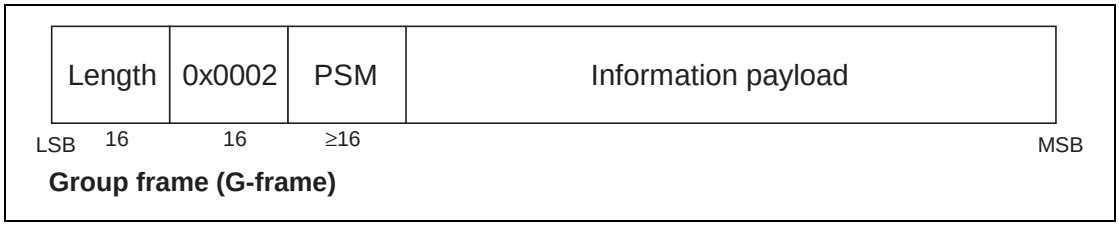

Figure 3.2: L2CAP PDU format in Basic L2CAP mode on Connectionless channel

The fields shown are:

- *Length: 2 octets*

  Length indicates the size of information payload plus the PSM field in octets.
- *Channel ID: 2 octets*

  Channel ID (0x0002) reserved for connectionless traffic.
- *Protocol/Service Multiplexer (PSM): 2 octets (minimum)*

  For information on the PSM field see Section 4.2 on page 44.
- *Information payload: 0 to 65533 octets*

  The payload information to be distributed to all members of the piconet. Implementations shall support a connectionless MTU (MTU_{cnl}) of 48 octets on connectionless channels. Devices may also explicitly change to a larger or smaller connectionless MTU (MTU_{cnl}).

  Note: the maximum size of the Information payload field decreases accordingly if the PSM field is extended beyond the two octet minimum.

3.3 CONNECTION-ORIENTED CHANNEL IN RETRANSMISSION/FLOW CONTROL MODES

To support flow control and retransmissions, L2CAP PDU types with protocol elements in addition to the Basic L2CAP header are defined. The information frames (I-frames) are used for information transfer between L2CAP entities. The supervisory frames (S-frames) are used to acknowledge I-frames and request retransmission of I-frames.

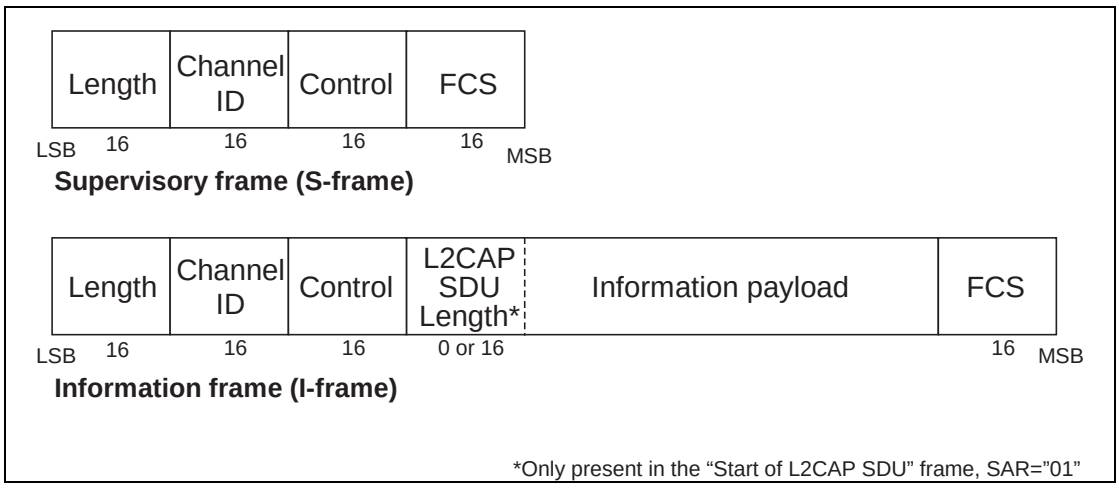

Figure 3.3: L2CAP PDU formats in Flow Control and Retransmission Modes

3.3.1 L2CAP header fields

- *Length: 2 octets*

  The first two octets in the L2CAP PDU contain the length of the entire L2CAP PDU in octets, excluding the Length and CID field.

  For I-frames and S-frames, the Length field therefore includes the octet lengths of the Control, L2CAP SDU Length (when present), Information octets and frame check sequence (FCS) fields.

  If the L2CAP SDU length field is present then the maximum number of Information octets in one I-frame is 65529 octets. If the L2CAP SDU length field is not present then the maximum number of Information octets in one I-frame is 65531 octets.

- *Channel ID: 2 octets*

  This field contains the Channel Identification (CID).

3.3.2 Control field (2 octets)

The Control field identifies the type of frame. The control field will contain sequence numbers where applicable. Its coding is shown in Table 3.1 on page 36. There are two different frame types, Information frame types and Supervisory frame types. Information and Supervisory frames types are distinguished by the rightmost bit in the Control field, as shown in Table 3.1 on page 36.

- *Information frame format (I-frame)*

  The I-frames are used to transfer information between L2CAP entities. Each I-frame has a TxSeq(Send sequence number), ReqSeq(Receive sequence number) which may or may not acknowledge additional I-frames received by the data link layer entity, and a retransmission bit (R bit) that affects whether I-frames are retransmitted.

  The SAR field in the I-frame is used for segmentation and reassembly control. The L2CAP SDU Length field specifies the length of an SDU, including the aggregate length across all segments if segmented.

- *Supervisory frame format (S-frame)*

  S-frames are used to acknowledge I-frames and request retransmission of I-frames. Each S-frame has an ReqSeq sequence number which may acknowledge additional I-frames received by the data link layer entity, and a retransmission bit (R bit) that affects whether I-frames are retransmitted.

  Defined types of S-frames are RR (Receiver Ready) and REJ (Reject).

Frame type	**16**	**15**	**14**	**13**	**12**	**11**	**10**	**9**	**8**	**7**	**6**	**5**	**4**	**3**	**2**	**1**
I	SAR		ReqSeq						R	TxSeq						0
S	X	X	ReqSeq						R	X	X	X	S		0	1

X denotes reserved bits. Shall be coded 0.

Table 3.1: Control Field formats

- *Send Sequence Number - TxSeq (6 bits)*

  The send sequence number is used to number each I-frame, to enable sequencing and retransmission.

- *Receive Sequence Number - ReqSeq (6 bits)*

  The receive sequence number is used by the receiver side to acknowledge I-frames, and in the REJ frame to request the retransmission of an I-frame with a specific send sequence number.

- *Retransmission Disable Bit - R (1 bit)*

  The Retransmission Disable bit is used to implement Flow Control. The receiver sets the bit when its internal receive buffer is full, this happens when one or more I-frames have been received but the SDU reassembly function has not yet pulled all the frames received. When the sender receives a frame with the Retransmission Disable bit set it shall disable the RetransmissionTimer, this causes the sender to stop retransmitting I-frames.

  R=0: Normal operation. Sender uses the RetransmissionTimer to control retransmission of I-frames. Sender does not use the MonitorTimer.

  R=1: Receiver side requests sender to postpone retransmission of I-frames. Sender monitors signalling with the MonitorTimer. Sender does not use the RetransmissionTimer.

  The functions of ReqSeq and R are independent.

- *Segmentation and Reassembly - SAR (2 bits)*

  The SAR bits define whether an L2CAP SDU is segmented. For segmented SDUs, the SAR bits also define which part of an SDU is in this I-frame, thus allowing one L2CAP SDU to span several I-frames.

  An I-frame with SAR="Start of L2CAP SDU" also contains a length indicator, specifying the number of information octets in the total L2CAP SDU. The encoding of the SAR bits is shown in Table 3.2.

00	Unsegmented L2CAP SDU
01	Start of L2CAP SDU
10	End of L2CAP SDU
11	Continuation of L2CAP SDU

Table 3.2: SAR control element format.

- *Supervisory function - S (2 bits)*

  The S-bits mark the type of S-frame. There are two types defined: RR (Receiver Ready) and REJ (Reject). The encoding is shown in Table 3.3.

00	RR - Receiver Ready
01	REJ - Reject
10	Reserved
11	Reserved

Table 3.3: S control element format: type of S-frame.

3.3.3 L2CAP SDU length field (2 octets)

When a SDU spans more than one I-frame, the first I-frame in the sequence shall be identified by SAR=01=”Start of L2CAP SDU”. The L2CAP SDU Length field shall specify the total number of octets in the SDU. The L2CAP SDU Length field shall be present in I-frames with SAR=01 (Start of L2CAP SDU), and shall not be used in any other I-frames. When the SDU is unsegmented (SAR=00), L2CAP SDU Length field is not needed and shall not be present.

3.3.4 Information payload field (0 to 65531 octets)

The information payload field consists of an integral number of octets. The maximum number of octets in this field is the same as the negotiated value of the MPS configuration parameter. The maximum number of octets in this field is also limited by the range of the basic L2CAP header length field. For I-frames without an SDU length field, this limits the maximum number of octets in the field to 65531. For I-frames with an SDU length field, SAR=01, this limits maximum number of octets in the field to 65529. Thus, even if an MPS of 65531 has been negotiated, the range of the basic L2CAP header length field will restrict the number of octets in this field when an SDU length field is present to 65529.

3.3.5 Frame check sequence (2 octets)

The Frame Check Sequence (FCS) is 2 octets. The FCS is constructed using the generator polynomial $g(D) = D^{16} + D^{15} + D^2 + 1$ (see Figure 3.4). The 16 bit LFSR is initially loaded with the value 0x0000, as depicted in Figure 3.5. The switch S is set in position 1 while data is shifted in, LSB first for each octet. After the last bit has entered the LFSR, the switch is set in position 2, and the register contents are transmitted from right to left (i.e. starting with position 15, then position 14, etc). The FCS covers the Basic L2CAP header, Control, L2CAP-SDU length and Information payload fields, if present, as shown in Figure 3.3 on page 35.

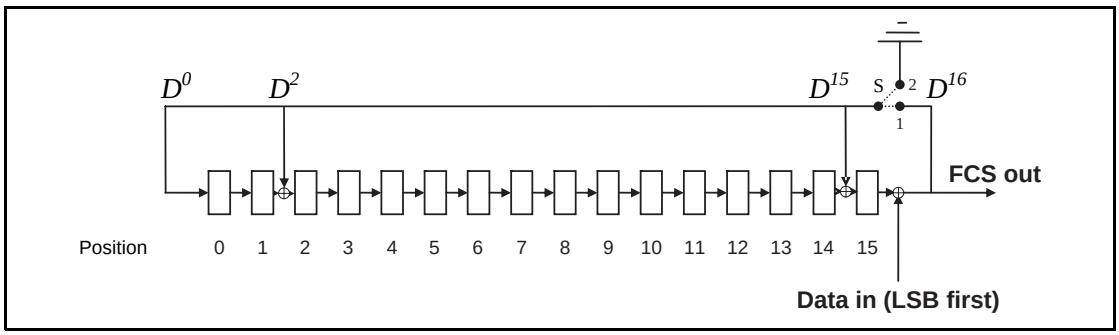

Figure 3.4: The LFSR circuit generating the FCS.

Position	0	1	2	3	4	5	6	7	8	9	10	11	12	13	14	15
LFSR	0	0	0	0	0	0	0	0	0	0	0	0	0	0	0	0

Figure 3.5: Initial state of the FCS generating circuit.

Examples of FCS calculation, $g(D) = D^{16} + D^{15} + D^2 + 1$:

1. ***I Frame***
   Length = 14
   Control = 0x0002 (SAR=0, ReqSeq=0, R=0, TxSeq=1)
   Information Payload = 00 01 02 03 04 05 06 07 08 09 (10 octets, hexadecimal notation)
   ==> FCS = 0x6138
   ==> Data to Send = 0E 00 40 00 02 00 00 01 02 03 04 05 06 07 08 09 38 61 (hexadecimal notation)
2. ***RR Frame***
   Length = 4
   Control = 0x0101 (ReqSeq=1, R=0, S=0)
   ==> FCS = 0x14D4
   ==> Data to Send = 04 00 40 00 01 01 D4 14 (hexadecimal notation)

3.3.6 Invalid frame detection

A received PDU shall be regarded as invalid, if one of the following conditions occurs:

1. Contains an unknown CID.
2. Contains an FCS error.
3. Contains a length greater than the maximum PDU payload size (MPS).
4. I-frame that has fewer than 8 octets.
5. I-frame with SAR=01 (Start of L2CAP SDU) that has fewer than 10 octets.
6. I-frame with SAR bits that do not correspond to a normal sequence of either unsegmented or start, continuation, end for the given CID.
7. S-frame where the length field is not equal to 4.

These error conditions may be used for error reporting.

4 SIGNALLING PACKET FORMATS

This section describes the signalling commands passed between two L2CAP entities on peer devices. All signalling commands are sent to the signalling channel with CID 0x0001. This signalling channel is available as soon as an ACL logical transport is set up and L2CAP traffic is enabled on the L2CAP logical link. Figure 4.1 on page 41 illustrates the general format of L2CAP PDUs containing signalling commands (C-frames). Multiple commands may be sent in a single C-frame. Commands take the form of Requests and Responses. All L2CAP implementations shall support the reception of C-frames with a payload length that does not exceed the signaling MTU. The minimum supported payload length for the C-frame (MTU_{sig}) is 48 octets. L2CAP implementations should not use C-frames that exceed the MTU_{sig} of the peer device. If they ever do, the peer device shall send a Command Reject containing the supported MTU_{sig}. Implementations must be able to handle the reception of multiple commands in an L2CAP packet.

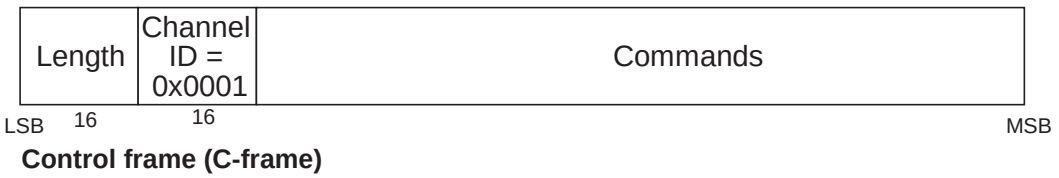

Figure 4.1: L2CAP PDU format on the signalling channel

Figure 4.2 displays the general format of all signalling commands.

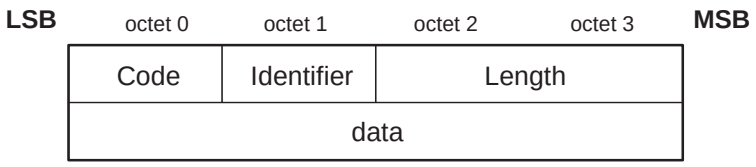

Figure 4.2: Command format

The fields shown are:

- *Code (1 octet)*

  The Code field is one octet long and identifies the type of command. When a packet is received with an unknown Code field, a Command Reject packet (defined in Section 4.1 on page 43) is sent in response.

  Table 4.1 on page 42 lists the codes defined by this document. All codes are specified with the most significant bit in the left-most position.

Code	Description
0x00	RESERVED
0x01	Command reject
0x02	Connection request
0x03	Connection response
0x04	Configure request
0x05	Configure response
0x06	Disconnection request
0x07	Disconnection response
0x08	Echo request
0x09	Echo response
0x0A	Information request
0x0B	Information response

Table 4.1: Signalling Command Codes

- *Identifier (1 octet)*

  The Identifier field is one octet long and matches responses with requests. The requesting device sets this field and the responding device uses the same value in its response. Between any two devices a different Identifier shall be used for each successive command. Following the original transmission of an Identifier in a command, the Identifier may be recycled if all other Identifiers have subsequently been used.

  RTX and ERTX timers are used to determine when the remote end point is not responding to signalling requests. On the expiration of a RTX or ERTX timer, the same identifier shall be used if a duplicate Request is re-sent as stated in Section 6.2 on page 74.

  A device receiving a duplicate request should reply with a duplicate response. A command response with an invalid identifier is silently discarded. Signaling identifier 0x00 is an illegal identifier and shall never be used in any command.

- *Length (2 octets)*

  The Length field is two octets long and indicates the size in octets of the data field of the command only, i.e., it does not cover the Code, Identifier, and Length fields.

- *Data (0 or more octets)*

  The Data field is variable in length. The Code field determines the format of the Data field. The length field determines the length of the data field.

4.1 COMMAND REJECT (CODE 0x01)

A Command Reject packet shall be sent in response to a command packet with an unknown command code or when sending the corresponding response is inappropriate. Figure 4.3 on page 43 displays the format of the packet. The identifier shall match the identifier of the command packet being rejected. Implementations shall always send these packets in response to unidentified signalling packets. Command Reject packets should not be sent in response to an identified Response packet.

When multiple commands are included in an L2CAP packet and the packet exceeds the signalling MTU (MTU_{sig}) of the receiver, a single Command Reject packet shall be sent in response. The identifier shall match the first Request command in the L2CAP packet. If only Responses are recognized, the packet shall be silently discarded.

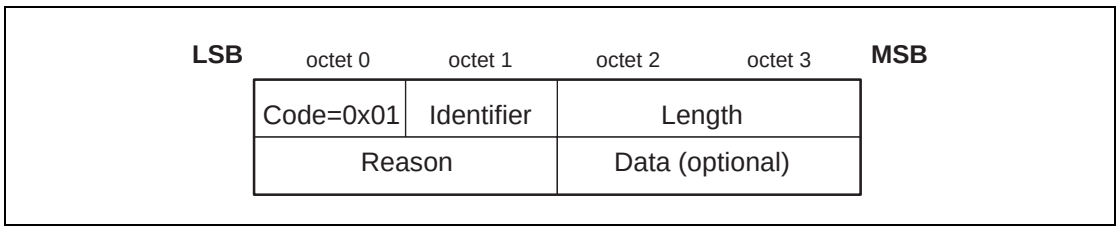

Figure 4.3: Command Reject packet

Figure 4.3 shows the format of the Command Reject packet. The data fields are:

- *Reason (2 octets)*

  The Reason field describes why the Request packet was rejected, and is set to one of the Reason codes in Table 4.2.

Reason value	Description
0x0000	Command not understood
0x0001	Signalling MTU exceeded
0x0002	Invalid CID in request
Other	Reserved

Table 4.2: Reason Code Descriptions

- *Data (0 or more octets)*

  The length and content of the Data field depends on the Reason code. If the Reason code is 0x0000, “Command not understood”, no Data field is used. If the Reason code is 0x0001, “Signalling MTU Exceeded”, the 2-octet Data field represents the maximum signalling MTU the sender of this packet can accept.

  If a command refers to an invalid channel then the Reason code 0x0002 will be returned. Typically a channel is invalid because it does not exist. The data field shall be 4 octets containing the local (first) and remote (second) channel endpoints (relative to the sender of the Command Reject) of the disputed channel. The remote endpoint is the source CID from the rejected command. The local endpoint is the destination CID from the rejected command. If the rejected command contains only one of the channel endpoints, the other one shall be replaced by the null CID 0x0000.

Reason value	Data Length	Data value
0x0000	0 octets	N/A
0x0001	2 octets	Actual MTU_{sig}
0x0002	4 octets	Requested CID

Table 4.3: Reason Data values

4.2 CONNECTION REQUEST (CODE 0x02)

Connection request packets are sent to create an L2CAP channel between two devices. The L2CAP channel shall be established before configuration begins. Figure 4.4 illustrates a Connection Request packet.

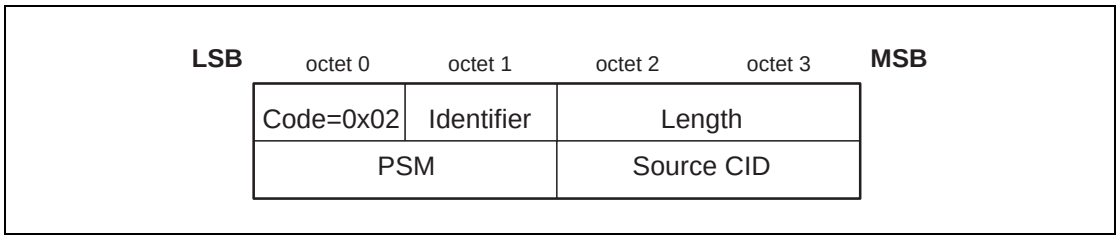

Figure 4.4: Connection Request Packet

The data fields are:

- *Protocol/Service Multiplexor - PSM (2 octets (minimum))*

  The PSM field is at least two octets in length. The structure of the PSM field is based on the ISO 3309 extension mechanism for address fields. All PSM values shall be ODD, that is, the least significant bit of the least significant octet must be ’1’. Also, all PSM values shall have the least significant bit of the most significant octet equal to ’0’. This allows the PSM field to be extended beyond 16 bits. PSM values are separated into two ranges. Values in the first range are assigned by the Bluetooth SIG and indicate protocols. The second range of values are dynamically allocated and used in conjunction with the Service Discovery Protocol (SDP). The dynamically assigned values may be used to support multiple implementations of a particular protocol.

PSM value	Description
0x0001	Service Discovery Protocol
0x0003	RFCOMM
0x0005	Telephony Control Protocol
0x0007	TCS cordless
0x000F	BNEP
0x0011	HID Control
0x0013	HID Interrupt
0x0015	UPnP (ESDP)
0x0017	AVCTP
0x0019	AVDTP
Other < 1000	RESERVED
[0x1001-0xFFFF]	DYNAMICALLY ASSIGNED

Table 4.4: Defined PSM Values[1]

1. The most recent PSM assignments can be found in the Assigned Numbers database on the Bluetooth member website.

- *Source CID - SCID (2 octets)*

  The source CID is two octets in length and represents a channel endpoint on the device sending the request. Once the channel has been configured, data packets flowing to the sender of the request shall be sent to this CID. Thus, the Source CID represents the channel endpoint on the device sending the request and receiving the response.

4.3 CONNECTION RESPONSE (CODE 0x03)

When a device receives a Connection Request packet, it shall send a Connection Response packet. The format of the connection response packet is shown in Figure 4.5.

LSB octet 0	octet 1	octet 2	octet 3 MSB
Code=0x03	Identifier	Length	
Destination CID		Source CID	
Result		Status	

Figure 4.5: Connection Response Packet

The data fields are:

- *Destination Channel Identifier - DCID (2 octets)*

  This field contains the channel endpoint on the device sending this Response packet. Thus, the Destination CID represents the channel endpoint on the device receiving the request and sending the response.

- *Source Channel Identifier - SCID (2 octets)*

  This field contains the channel endpoint on the device receiving this Response packet. This is copied from the SCID field of the connection request packet.

- *Result (2 octets)*

  The result field indicates the outcome of the connection request. The result value of 0x0000 indicates success while a non-zero value indicates the connection request failed or is pending. A logical channel is established on the receipt of a successful result. Table 4.5 on page 46 defines values for this field. The DCID and SCID fields shall be ignored when the result field indicates the connection was refused.

Value	Description
0x0000	Connection successful.
0x0001	Connection pending
0x0002	Connection refused – PSM not supported.
0x0003	Connection refused – security block.
0x0004	Connection refused – no resources available.
Other	Reserved.

Table 4.5: Result values

- *Status (2 octets)*

  Only defined for Result = Pending. Indicates the status of the connection. The status is set to one of the values shown in Table 4.6 on page 47.

Value	Description
0x0000	No further information available
0x0001	Authentication pending
0x0002	Authorization pending
Other	Reserved

Table 4.6: Status values

4.4 CONFIGURATION REQUEST (CODE 0x04)

Configuration Request packets are sent to establish an initial logical link transmission contract between two L2CAP entities and also to re-negotiate this contract whenever appropriate. During a re-negotiation session, all data traffic on the channel should be suspended pending the outcome of the negotiation. Each configuration parameter in a Configuration Request shall be related exclusively to either the outgoing or the incoming data traffic but not both of them. In Section 5 on page 57, the various configuration parameters and their relation to the outgoing or incoming data traffic are shown. If an L2CAP entity receives a Configuration Request while it is waiting for a response it shall not block sending the Configuration Response, otherwise the configuration process may deadlock.

If no parameters need to be negotiated then no options shall be inserted and the continuation flag (C)shall be set to zero. L2CAP entities in remote devices shall negotiate all parameters defined in this document whenever the default values are not acceptable. Any missing configuration parameters are assumed to have their most recently explicitly or implicitly accepted values. Even if all default values are acceptable, a Configuration Request packet with no options shall be sent. Implicitly accepted values are default values for the configuration parameters that have not been explicitly negotiated for the specific channel under configuration.

Each configuration parameter is one-directional. The configuration parameters describe the non default parameters the device sending the Configuration Request will accept. The configuration request can not request a change in the parameters the device receiving the request will accept.

If a device needs to establish the value of a configuration parameter the remote device will accept, then it must wait for a configuration request containing that configuration parameter to be sent from the remote device.

See Section 7.1 on page 79 for details of the configuration procedure.

Figure 4.6 defines the format of the Configuration Request packet.

LSB octet 0	octet 1	octet 2	octet 3 MSB
Code=0x04	Identifier	Length	
Destination CID		Flags	
Configuration Options			

Figure 4.6: Configuration Request Packet

The data fields are:

- *Destination CID - DCID (2 octets)*

  This field contains the channel endpoint on the device receiving this Request packet.

- *Flags (2 octets)*

  Figure 4.7 shows the two-octet Flags field. Note the most significant bit is shown on the left.

MSB	LSB
Reserved	C

Figure 4.7: Configuration Request Flags field format

Only one flag is defined, the Continuation flag (C).

When all configuration options cannot fit into a Configuration Request with length that does not exceed the receiver's MTU_{sig}, the options shall be passed in multiple configuration command packets. If all options fit into the receiver's MTU_{sig}, then they shall be sent in a single configuration request with the continuation flag set to zero. Each Configuration Request shall contain an integral number of options - partially formed options shall not be sent in a packet. Each Request shall be tagged with a different Identifier and shall be matched with a Response with the same Identifier.

When used in the Configuration Request, the continuation flag indicates the responder should expect to receive multiple request packets. The responder shall reply to each Configuration Request packet. The responder may reply to each Configuration Request with a Configuration Response containing the same option(s) present in the Request (except for those error conditions more appropriate for a Command Reject), or the responder may reply with a "Success" Configuration Response packet containing no options, delaying those options until the full Request has been received. The Configuration Request packet with the continuation flag cleared shall be treated as the Configuration Request event in the channel state machine.

When used in the Configuration Response, the continuation flag shall be set to one if the flag is set to one in the Request. If the continuation flag is set to one in the Response when the matching Request has the flag set to zero, it indicates the responder has additional options to send to the requestor. In this situation, the requestor shall send null-option Configuration Requests (with continuation flag set to zero) to the responder until the responder replies with a Configuration Response where the continuation flag is set to zero. The Configuration Response packet with the continuation flag set to zero shall be treated as the Configuration Response event in the channel state machine.

The result of the configuration transaction is the union of all the result values. All the result values must succeed for the configuration transaction to succeed.

Other flags are reserved and shall be set to zero. L2CAP implementations shall ignore these bits.

- *Configuration Options*

  A list of the parameters and their values to be negotiated shall be provided in the Configuration Options field. These are defined in Section 5 on page 57. A Configuration Request may contain no options (referred to as an empty or null configuration request) and can be used to request a response. For an empty configuration request the length field is set to 0x0004.

4.5 CONFIGURATION RESPONSE (CODE 0X05)

Configuration Response packets shall be sent in reply to Configuration Request packets except when the error condition is covered by a Command Reject response. Each configuration parameter value (if any is present) in a Configuration Response reflects an 'adjustment' to a configuration parameter value that has been sent (or, in case of default values, implied) in the corresponding Configuration Request. For example, if a configuration request relates to traffic flowing from device A to device B, the sender of the configuration response may adjust this value for the same traffic flowing from device A to device B, but the response can not adjust the value in the reverse direction.

The options sent in the Response depend on the value in the Result field. Figure 4.8 on page 50 defines the format of the Configuration Response packet. See also Section 7.1 on page 79 for details of the configuration process.

LSB octet 0	octet 1	octet 2	octet 3 MSB
Code=0x05	Identifier	Length	
Source CID		Flags	
Result		Config	

Figure 4.8: Configuration Response Packet

The data fields are:

- *Source CID - SCID (2 octets)*

  This field contains the channel endpoint on the device receiving this Response packet. The device receiving the Response shall check that the Identifier field matches the same field in the corresponding configuration request command and the SCID matches its local CID paired with the original DCID.

- *Flags (2 octets)*

  Figure 4.9 displays the two-octet Flags field. Note the most significant bit is shown on the left.

MSB	LSB
Reserved	C

Figure 4.9: Configuration Response Flags field format

Only one flag is defined, the Continuation flag (C).

More configuration responses will follow when C is set to one. This flag indicates that the parameters included in the response are a partial subset of parameters being sent by the device sending the Response packet.

The other flag bits are reserved and shall be set to zero. L2CAP implementations shall ignore these bits.

- *Result (2 octets)*

  The Result field indicates whether or not the Request was acceptable. See Table 4.7 on page 51 for possible result codes.

Result	Description
0x0000	Success
0x0001	Failure – unacceptable parameters
0x0002	Failure – rejected (no reason provided)
0x0003	Failure – unknown options
Other	RESERVED

Table 4.7: Configuration Response Result codes

- *Configuration Options*

  This field contains the list of parameters being configured. These are defined in Section 5 on page 57. On a successful result, these parameters contain the return values for any wild card parameter values (see Section 5.3 on page 60) contained in the request.

  On an unacceptable parameters failure (Result=0x0001) the rejected parameters shall be sent in the response with the values that would have been accepted if sent in the original request. Any missing configuration parameters are assumed to have their most recently accepted values and they too shall be included in the Configuration Response if they need to be changed.

  Each configuration parameter is one-directional. The configuration parameters describe the non default parameters the device sending the Configuration Request will accept. The configuration request can not request a change in the parameters the device receiving the request will accept.

  If a device needs to establish the value of a configuration parameter the remote device will accept, then it must wait for a configuration request containing that configuration parameter to be sent from the remote device.

  On an unknown option failure (Result=0x0003), the option types not understood by the recipient of the Request shall be included in the Response unless they are hints. Hints are those options in the Request that are skipped if not understood (see Section 5 on page 57). Hints shall not be included in the Response and shall not be the sole cause for rejecting the Request.

  The decision on the amount of time (or messages) spent arbitrating the channel parameters before terminating the negotiation is implementation specific.

4.6 DISCONNECTION REQUEST (CODE 0x06)

Terminating an L2CAP channel requires that a disconnection request be sent and acknowledged by a disconnection response. Figure 4.10 on page 52 shows a disconnection request. The receiver shall ensure that both source and destination CIDs match before initiating a channel disconnection.

Once a Disconnection Request is issued, all incoming data in transit on this L2CAP channel shall be discarded and any new additional outgoing data shall be discarded. Once a disconnection request for a channel has been received, all data queued to be sent out on that channel shall be discarded.

LSB	octet 0	octet 1	octet 2	octet 3	MSB
	Code=0x06	Identifier	Length		
	Destination CID		Source CID		

Figure 4.10: Disconnection Request Packet

The data fields are:

- *Destination CID - DCID (2 octets)*

  This field specifies the endpoint of the channel to be disconnected on the device receiving this request.

- *Source CID - SCID (2 octets)*

  This field specifies the endpoint of the channel to be disconnected on the device sending this request.

The SCID and DCID are relative to the sender of this request and shall match those of the channel to be disconnected. If the DCID is not recognized by the receiver of this message, a CommandReject message with ’invalid CID’ result code shall be sent in response. If the receiver finds a DCID match but the SCID fails to find the same match, the request should be silently discarded.

4.7 DISCONNECTION RESPONSE (CODE 0x07)

Disconnection responses shall be sent in response to each valid disconnection request.

LSB	octet 0	octet 1	octet 2	octet 3	MSB
	Code=0x07	Identifier	Length		
	Destination CID		Source CID		

Figure 4.11: Disconnection Response Packet

The data fields are:

- *Destination CID - DCID (2 octets)*

  This field identifies the channel endpoint on the device sending the response.

- *Source CID - SCID (2 octets)*

  This field identifies the channel endpoint on the device receiving the response.

  The DCID and the SCID (which are relative to the sender of the request), and the Identifier fields shall match those of the corresponding disconnection request command. If the CIDs do not match, the response should be silently discarded at the receiver.

4.8 ECHO REQUEST (CODE 0x08)

Echo requests are used to request a response from a remote L2CAP entity. These requests may be used for testing the link or for passing vendor specific information using the optional data field. L2CAP entities shall respond to a valid Echo Request packet with an Echo Response packet. The Data field is optional and implementation specific. L2CAP entities should ignore the contents of this field if present.

LSB	octet 0	octet 1	octet 2	octet 3	MSB
	Code=0x08	Identifier	Length		
	Data (optional)				

Figure 4.12: Echo Request Packet

4.9 ECHO RESPONSE (CODE 0x09)

An Echo response shall be sent upon receiving a valid Echo Request. The identifier in the response shall match the identifier sent in the Request. The optional and implementation specific data field may contain the contents of the data field in the Request, different data, or no data at all.

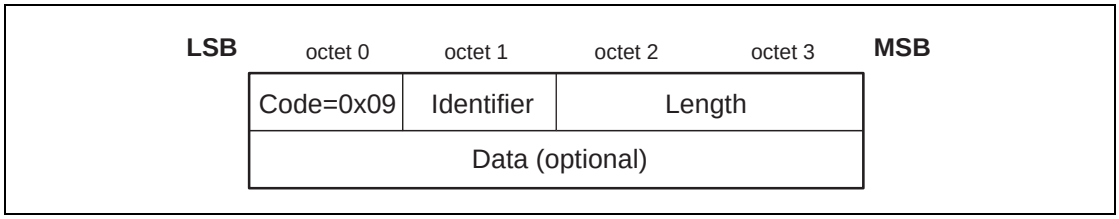

Figure 4.13: Echo Response Packet

4.10 INFORMATION REQUEST (CODE 0X0A)

Information requests are used to request implementation specific information from a remote L2CAP entity. L2CAP implementations shall respond to a valid Information Request with an Information Response. It is optional to send Information Requests.

An L2CAP implementation shall only use optional features or attribute ranges for which the remote L2CAP entity has indicated support through an Information Response. Until an Information Response which indicates support for optional features or ranges has been received only mandatory features and ranges shall be used.

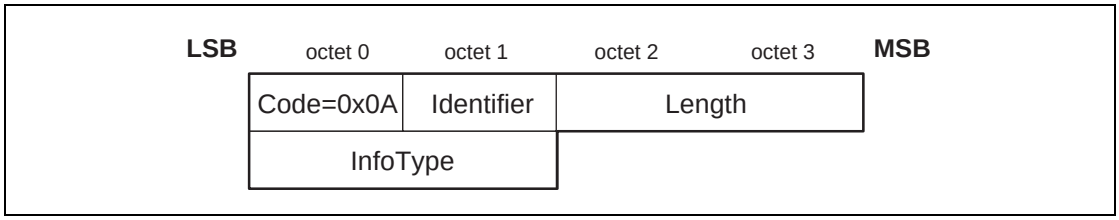

Figure 4.14: Information Request Packet

The data fields are:

- *InfoType (2 octets)*

  The InfoType defines the type of implementation specific information being requested. See Section 4.11 on page 55 for details on the type of information requested.

Value	Description
0x0001	Connectionless MTU
0x0002	Extended features supported
Other	Reserved

Table 4.8: InfoType definitions

4.11 INFORMATION RESPONSE (CODE 0X0B)

An information response shall be sent upon receiving a valid Information Request. The identifier in the response shall match the identifier sent in the Request. The data field shall contain the value associated with the InfoType field sent in the Request, or shall be empty if the InfoType is not supported.

LSB octet 0	octet 1	octet 2	octet 3 MSB
Code=0x0B	Identifier	Length	
InfoType		Result	
Data (optional)			

Figure 4.15: Information Response Packet

The data fields are:

- *InfoType (2 octets)*

  The InfoType defines the type of implementation specific information that was requested. This value shall be copied from the InfoType field in the Information Request.

- *Result (2 octets)*

  The Result contains information about the success of the request. If result is "Success", the data field contains the information as specified in Table 4.10 on page 56. If result is "Not supported", no data shall be returned.

Value	Description
0x0000	Success
0x0001	Not supported
Other	Reserved

Table 4.9: Information Response Result values

- *Data (0 or more octets)*

  The contents of the Data field depends on the InfoType.
  For InfoType = 0x0001 the data field contains the remote entity's 2-octet acceptable connectionless MTU. The default value is defined in Section 3.2 on page 34.

  For InfoType = 0x0002, the data field contains the 4 octet L2CAP extended feature mask. The feature mask refers to the extended features that the L2CAP entity sending the Information Response supports. The feature bits contained in the L2CAP feature mask are specified in Section 4.12 on page 56.

Note: L2CAP entities of versions prior to version 1.2, receiving an Information Request with InfoType = 0x0002 for an L2CAP feature discovery, will return an Information Response with result code "Not supported".

InfoType	Data	Data Length (octets)
0x0001	Connectionless MTU	2
0x0002	Extended feature mask	4

Table 4.10: Information Response Data fields

4.12 EXTENDED FEATURE MASK

The features are represented as a bit mask in the Information Response data field (see Section 4.11 on page 55). For each feature a single bit is specified which shall be set to 1 if the feature is supported and set to 0 otherwise. All unknown, reserved, or unassigned feature bits shall be set to 0.

The feature mask shown in Table 4.11 on page 56 consists of 4 octets (numbered octet 0 ... 3), with bit numbers 0 ... 7 each. Within the Information Response packet data field, bit 0 of octet 0 is aligned leftmost, bit 7 of octet 3 is aligned rightmost.

Note: the L2CAP feature mask is a new concept introduced in Bluetooth v1.2 and thus contains new features introduced after Bluetooth v1.1.

No.	Supported feature	Octet	Bit
0	Flow control mode	0	0
1	Retransmission mode	0	1
2	Bi-directional QoS[1]	0	2
31	Reserved for feature mask extension	3	7

Table 4.11: Extended feature mask.

1. Peer side supports upper layer control of the Link Manager's Bi-directional QoS, see Section 5.3 on page 60 for more details.

5 CONFIGURATION PARAMETER OPTIONS

Options are a mechanism to extend the configuration parameters. Options shall be transmitted as information elements containing an option type, an option length, and one or more option data fields. Figure 5.1 illustrates the format of an option.

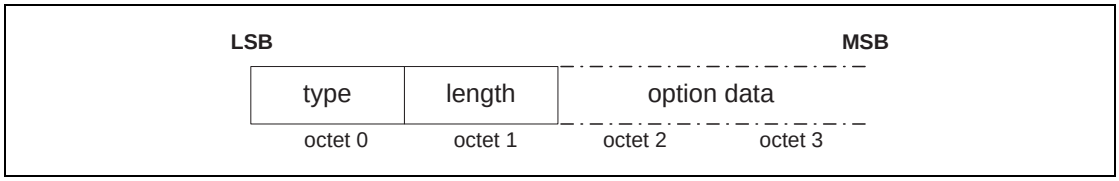

Figure 5.1: Configuration option format

The configuration option fields are:

- *Type (1 octet)*

  The option type field defines the parameters being configured. The most significant bit of the type determines the action taken if the option is not recognized.

  0 - option must be recognized; if the option is not recognized then refuse the configuration request

  1 - option is a hint; if the option is not recognized then skip the option and continue processing

- *Length (1 octet)*

  The length field defines the number of octets in the option data. Thus an option type without option data has a length of 0.

- *Option data*

  The contents of this field are dependent on the option type.

5.1 MAXIMUM TRANSMISSION UNIT (MTU)

This option specifies the maximum SDU size the sender of this option is capable of accepting for a channel. The type is 0x01, and the payload length is 2 octets, carrying the two-octet MTU size value as the only information element (see Figure 5.2 on page 58). Unlike the B-Frame length field, the I-Frame length field may be greater then the configured MTU because it includes the octet lengths of the Control, L2CAP SDU Length (when present), and frame check sequence fields as well as the Information octets.

MTU is not a negotiated value, it is an informational parameter that each device can specify independently. It indicates to the remote device that the local device can receive, in this channel, an MTU larger than the minimum required. All L2CAP implementations shall support a minimum MTU of 48 octets, however some protocols and profiles explicitly require support for a

larger MTU. The minimum MTU for a channel is the larger of the L2CAP minimum 48 octet MTU and any MTU explicitly required by the protocols and profiles using that channel. (Note: the MTU is only affected by the profile directly using the channel. For example, if a service discovery transaction is initiated by a non service discovery profile, that profile does not affect the MTU of the L2CAP channel used for service discovery).

The following rules shall be used when responding to a configuration request specifying the MTU for a channel:

- A request specifying any MTU greater than or equal to the minimum MTU for the channel shall be accepted.
- A request specifying an MTU smaller than the minimum MTU for the channel may be rejected.

The signalling described in Section 4.5 on page 50 may be used to reject an MTU smaller than the minimum MTU for a channel. The "failure-unacceptable parameters" result sent to reject the MTU shall include the proposed value of MTU that the remote device intends to transmit. It is implementation specific whether the local device continues the configuration process or disconnects the channel.

If the remote device sends a positive configuration response it shall include the actual MTU to be used on this channel for traffic flowing into the local device. This is the minimum of the MTU in the configuration request and the outgoing MTU capability of the device sending the configuration response. The new agreed value (the default value in a future re-configuration) is the value specified in the request.

The MTU to be used on this channel for the traffic flowing in the opposite direction will be established when the remote device sends its own Configuration Request as explained in Section 4.4 on page 47.

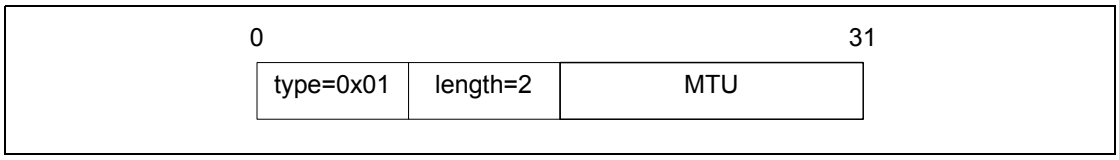

Figure 5.2: MTU Option Format

The option data field is:

- Maximum Transmission Unit - MTU (2 octets)

  The MTU field is the maximum SDU size, in octets, that the originator of the Request can accept for this channel. The MTU is asymmetric and the sender of the Request shall specify the MTU it can receive on this channel if it differs from the default value. L2CAP implementations shall support a minimum MTU size of 48 octets. The default value is 672 octets[1].

5.2 FLUSH TIMEOUT OPTION

This option is used to inform the recipient of the Flush Timeout the sender is going to use. The Flush Timeout is defined in the Baseband specification "Flushing payloads" on page 130[vol. 2]. The type is 0x02 and the payload size is 2 octets.

If the remote device returns a negative response to this option and the local device cannot honor the proposed value, then it shall either continue the configuration process by sending a new request with the original value, or disconnect the channel. The flush timeout applies to all channels on the same ACL logical transport and other channels on the same ACL logical transport may therefore have other values.

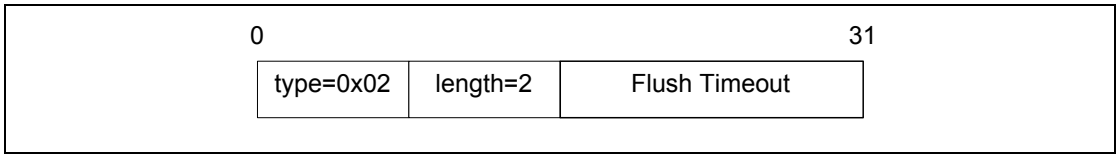

Figure 5.3: Flush Timeout option format.

The option data field is:

- *Flush Timeout*

  This value is the Flush Timeout in milliseconds. This is an asymmetric value and the sender of the Request shall specify its flush timeout value if it differs from the default value of 0xFFFF.

  Possible values are:

  0x0001 - no retransmissions at the baseband level should be performed since the minimum polling interval is 1.25 ms.

  0x0002 to 0xFFFE - Flush Timeout used by the baseband.

  0xFFFF - an infinite amount of retransmissions. This is also referred to as a 'reliable channel'. In this case, the baseband shall continue retransmissions until physical link loss is declared by link manager timeouts.

1. The default MTU was selected based on the payload carried by two baseband DH5 packets (2*341=682) minus the baseband ACL headers (2*2=4) and L2CAP header (6).

5.3 QUALITY OF SERVICE (QOS) OPTION

This option specifies a flow specification similar to RFC 1363[1]. Although the RFC flow specification addresses only the transmit characteristics, the Bluetooth QoS interface can handle the two directions (Tx and Rx) in the negotiation as described below.

If no QoS configuration parameter is negotiated the link shall assume the default parameters. The QoS option is type 0x03.

In a configuration request, this option describes the outgoing traffic flow from the device sending the request. In a positive Configuration Response, this option describes the incoming traffic flow agreement to the device sending the response. In a negative Configuration Response, this option describes the preferred incoming traffic flow to the device sending the response.

L2CAP implementations are only required to support 'Best Effort' service, support for any other service type is optional. Best Effort does not require any guarantees. If no QoS option is placed in the request, Best Effort shall be assumed. If any QoS guarantees are required then a QoS configuration request shall be sent.

The remote device's Configuration Response contains information that depends on the value of the result field (see Section 4.5 on page 50). If the request was for Guaranteed Service, the response shall include specific values for any wild card parameters (see Token Rate and Token Bucket Size descriptions) contained in the request. If the result is "Failure – unacceptable parameters", the response shall include a list of outgoing flow specification parameters and parameter values that would make a new Connection Request from the local device acceptable by the remote device. Both explicitly referenced in a Configuration Request or implied configuration parameters can be included in a Configuration Response. Recall that any missing configuration parameters from a Configuration Request are assumed to have their most recently accepted values.

If a configuration request contains any QoS option parameters set to "do not care" then the configuration response shall set the same parameters to "do not care". This rule applies for both Best Effort and Guaranteed Service.

1. Internet Engineering Task Force, "A Proposed Flow Specification", RFC 1363, September 1992.

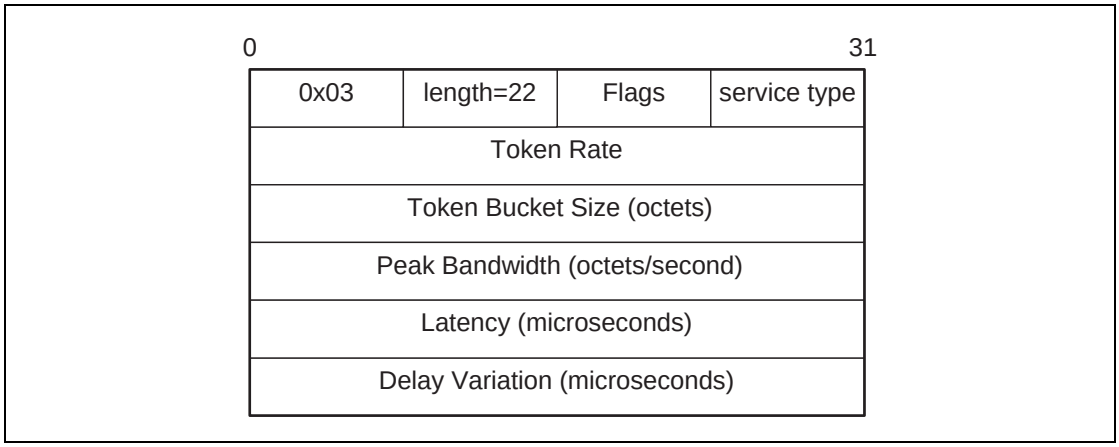

Figure 5.4: Quality of Service (QoS) option format containing Flow Specification.

The option data fields are:

- *Flags (1 octet)*

  Reserved for future use and shall be set to 0 and ignored by the receiver.

- *Service Type (1 octet)*

  This field indicates the level of service required. Table 5.1 on page 61 defines the different services available. The default value is ‘Best effort’.

  If ’Best effort’ is selected, the remaining parameters should be treated as optional by the remote device. The remote device may choose to ignore the fields, try to satisfy the parameters but provide no response (QoS option omitted in the Response message), or respond with the settings it will try to meet.

  If ’No traffic’ is selected, the remainder of the fields shall be ignored because there is no data being sent across the channel in the outgoing direction.

Value	Description
0x00	No traffic
0x01	Best effort (Default)
0x02	Guaranteed
Other	Reserved

Table 5.1: Service type definitions

- *Token Rate (4 octets)*

  The value of this field represents the average data rate with which the application transmits data. The application may send data at this rate continuously. On a short time scale the application may send data in excess of the average data rate, dependent on the specified Token Bucket Size and Peak Bandwidth (see below). The Token Bucket Size and Peak Bandwidth allow the application to transmit data in a 'bursty' fashion.

The Token Rate signalled between two L2CAP peers is the data transmitted by the application and shall exclude the L2CAP protocol overhead. The Token Rate signalled over the interface between L2CAP and the Link Manager shall include the L2CAP protocol overhead. Furthermore the Token Rate value signalled over this interface may also include the aggregation of multiple L2CAP channels onto the same ACL logical transport.

The Token Rate is the rate with which traffic credits are provided. Credits can be accumulated up to the Token Bucket Size. Traffic credits are consumed when data is transmitted by the application. When traffic is transmitted, and there are insufficient credits available, the traffic is non-conformant. The Quality of Service guarantees are only provided for conformant traffic. For non-conformant traffic there may not be sufficient resources such as bandwidth and buffer space. Furthermore non-conformant traffic may violate the QoS guarantees of other traffic flows.

The Token Rate is specified in octets per second. The value 0x00000000 indicates no token rate is specified. This is the default value and means “do not care”. When the Guaranteed service is selected, the default value shall not be used. The value 0xFFFFFFFF is a wild card matching the maximum token rate available. The meaning of this value depends on the service type. For best effort, the value is a hint that the application wants as much bandwidth as possible. For Guaranteed service the value represents the maximum bandwidth available at the time of the request.

- *Token Bucket Size (4 octets)*

  The Token Bucket Size specifies a limit on the 'burstiness' with which the application may transmit data. The application may offer a burst of data equal to the Token Bucket Size instantaneously, limited by the Peak Bandwidth (see below). The Token Bucket Size is specified in octets.

  The Token Bucket Size signalled between two L2CAP peers is the data transmitted by the application and shall exclude the L2CAP protocol overhead. The Token Bucket Size signalled over the interface between L2CAP and Link Manager shall include the L2CAP protocol overhead. Furthermore the Token Bucket Size value over this interface may include the aggregation of multiple L2CAP channels onto the same ACL logical transport.

  The value of 0x00000000 means that no token bucket is needed; this is the default value. When the Guaranteed service is selected, the default value shall not be used. The value 0xFFFFFFFF is a wild card matching the maximum token bucket available. The meaning of this value depends on the service type. For best effort, the value indicates the application wants a bucket as big as possible. For Guaranteed service the value represents the maximum L2CAP SDU size.

  The Token Bucket Size is a property of the traffic carried over the L2CAP channel. The Maximum Transmission Unit (MTU) is a property of an L2CAP implementation. For the Guaranteed service the Token Bucket Size shall be smaller or equal to the MTU.

- *Peak Bandwidth (4 octets)*

  The value of this field, expressed in octets per second, limits how fast packets from applications may be sent back-to-back. Some systems can take advantage of this information, resulting in more efficient resource allocation.

  The Peak Bandwidth signalled between two L2CAP peers specifies the data transmitted by the application and shall exclude the L2CAP protocol overhead. The Peak Bandwidth signalled over the interface between L2CAP and Link Manager shall include the L2CAP protocol overhead. Furthermore the Peak Bandwidth value over this interface may include the aggregation of multiple L2CAP channels onto the same ACL logical transport.

  The value of 0x00000000 means "don't care". This states that the device has no preference on incoming maximum bandwidth, and is the default value. When the Guaranteed service is selected, the default value shall not be used.

- *Access Latency (4 octets)*

  The value of this field is the maximum acceptable delay of an L2CAP packet to the air-interface. The precise interpretation of this number depends on over which interface this flow parameter is signalled. When signalled between two L2CAP peers, the Access Latency is the maximum acceptable delay between the instant when the L2CAP SDU is received from the upper layer and the start of the L2CAP SDU transmission over the air. When signalled over the interface between L2CAP and the Link Manager, it is the maximum delay between the instant the first fragment of an L2CAP PDU is stored in the Host Controller buffer and the initial transmission of the L2CAP packet on the air.

  Thus the Access Latency value may be different when signalled between L2CAP and the Link Manager to account for any queuing delay at the L2CAP transmit side. Furthermore the Access Latency value may include the aggregation of multiple L2CAP channels onto the same ACL logical transport.

  The Access Latency is expressed in microseconds. The value 0xFFFFFFFF means “do not care” and is the default value. When the Guaranteed service is selected, the default value shall not be used.

- *Delay Variation (4 octets)*

  The value of this field is the difference, in microseconds, between the maximum and minimum possible delay of an L2CAP SDU between two L2CAP peers. The Delay Variation is a purely informational parameter. The value 0xFFFFFFFF means “do not care” and is the default value.

5.4 RETRANSMISSION AND FLOW CONTROL OPTION

This option specifies whether retransmission and flow control is used. If the feature is used incoming parameters are specified by this option.

0			31
0x04	**Length=9**	**Mode**	**TxWindow size**
Max Transmit	**Retransmission time-out**		**Monitor time-out** (least significant byte)
Monitor time-out (most significant byte)	**Maximum PDU size (MPS)**		

Figure 5.5: Retransmission and Flow Control option format.

The option data fields are:

- *Mode (1 octet)*

  The field contain the requested mode of the link. Possible values are shown in Table 5.2 on page 64.

Value	Description
0x00	Basic L2CAP mode
0x01	Retransmission Mode
0x02	Flow control mode
Other values	Reserved for future use

Table 5.2: Mode definitions.

  The Basic L2CAP mode is the default. If Basic L2CAP mode is requested then all other parameters shall be ignored.

  Retransmission mode should be enabled if a reliable channel has been requested, or if the L2CAP Flush Time-Out is long enough to contain the round-trip delay of a retransmission request.

- *TxWindow size (1 octet)*

  This field specifies the size of the transmission window for flow control mode and retransmission mode. The range is 1 to 32.

  This parameter should be negotiated to reflect the buffer sizes allocated for the connection on both sides. In general, the Tx Window size should be made as large as possible to maximize channel utilization. Tx Window size also controls the delay on flow control action. The transmitting device can send as many PDUs fit within the window.

- *MaxTransmit (1 octet)*

  This field controls the number of transmissions of a single I-frame that L2CAP is allowed to try in Retransmission mode. The minimum value is 1 (one transmission is permitted).

  MaxTransmit controls the number of retransmissions that L2CAP is allowed to try in Retransmission mode before accepting that a packet and the link is lost. Lower values might be appropriate for services requiring low latency. Higher values will be suitable for a link requiring robust operation. A value of 1 means that no retransmissions will be made but also means that the link will be dropped as soon as a packet is lost. MaxTransmit shall not be set to zero.

- *Retransmission time-out (2 octets)*

  This is the value in milliseconds of the retransmission time-out (this value is used to initialize the RetransmissionTimer, see below).

  The purpose of this timer in retransmission mode is to activate a retransmission in some exceptional cases. In such cases, any delay requirements on the channel may be broken, so the value of the timer should be set high enough to avoid unnecessary retransmissions due to delayed acknowledgements. Suitable values could be 100's of milliseconds and up.

  The purpose of this timer in flow control mode is to supervise I-frame transmissions. If an acknowledgement for an I-frame is not received within the time specified by the RetransmissionTimer value, either because the I-frame has been lost or the acknowledgement has been lost, the timeout will cause the transmitting side to continue transmissions. Suitable values are implementation dependent.

- *Monitor time-out (2 octets)*

  This is the value in milliseconds of the interval at which S-frames should be transmitted on the return channel when no frames are received on the forward channel. (this value is used to initialize the MonitorTimer, see below).

  This timer ensures that lost acknowledgements are retransmitted. Its main use is to recover Retransmission Disable Bit changes in lost frames when no data is being sent. The timer shall be started immediately upon transitioning to the open state. It shall remain active as long as the connection is in the open state and the retransmission timer is not active. Upon expiration of the Monitor timer an S-frame shall be sent and the timer shall be restarted. If the monitor timer is already active when an S-frame is sent, the timer shall be restarted. An idle connection will have periodic monitor traffic sent in both directions. The value for this time-out should also be set to 100's of milliseconds or higher.

- *Maximum PDU payload Size - MPS (2 octets)*

  The maximum size of payload data in octets that the L2CAP layer entity is capable of accepting, i.e. the MPS corresponds to the maximum PDU payload size.

The settings are configured separately for the two directions of an L2CAP connection. For example, an L2CAP connection can be configured as Flow Control

mode in one direction and Retransmission mode in the other direction. If Basic L2CAP mode is configured in one direction and Retransmission mode or Flow control mode is configured in the other direction on the same L2CAP channel then the channel shall not be used.
Note: this asymmetric configuration only occurs during configuration.

6 STATE MACHINE

This section is informative. The state machine may not represent all possible scenarios.

6.1 GENERAL RULES FOR THE STATE MACHINE:

- It is implementation specific, and outside the scope of this specification, how the transmissions are triggered.
- "Ignore" means that the signal can be silently discarded.

The following states have been defined to clarify the protocol; the actual number of states and naming in a given implementation is outside the scope of this specification:

- CLOSED – channel not connected.
- WAIT_CONNECT – a connection request has been received, but only a connection response with indication “pending” can be sent.
- WAIT_CONNECT_RSP – a connection request has been sent, pending a positive connect response.
- CONFIG – the different options are being negotiated for both sides; this state comprises a number of substates, see Section 6.1.3 on page 69
- OPEN – user data transfer state.
- WAIT_DISCONNECT – a disconnect request has been sent, pending a disconnect response.

Below the L2CAP_Data message corresponds to one of the PDU formats used on connection-oriented data channels as described in section 3, including PDUs containing B-frames, I-frames, S-frames.

Some state transitions and actions are triggered only by internal events effecting one of the L2CAP entity implementations, not by preceding L2CAP signalling messages. It is implementation-specific and out of the scope of this specification, how these internal events are realized; just for the clarity of specifying the state machine, the following abstract internal events are used in the state event tables, as far as needed:

- *OpenChannel_Req* – a local L2CAP entity is requested to set up a new connection-oriented channel.
- *OpenChannel_Rsp* – a local L2CAP entity is requested to finally accept or refuse a pending connection request.
- *ConfigureChannel_Req* – a local L2CAP entity is requested to initiate an outgoing configuration request.
- *CloseChannel_Req* – a local L2CAP entity is requested to close a channel.
- *SendData_Req* – a local L2CAP entity is requested to transmit an SDU.
- *ReconfigureChannel_Req* – a local L2CAP entity is requested to reconfigure the parameters of a connection-oriented channel.

There is a single state machine for each L2CAP connection-oriented channel that is active. A state machine is created for each new L2CAP_ConnectReq received. The state machine always starts in the CLOSED state.

To simplify the state event tables, the RTX and ERTX timers, as well as the handling of request retransmissions are described in Section 6.2 on page 74 and not included in the state tables.

L2CAP messages not bound to a specific data channel and thus not impacting a channel state (e.g. L2CAP_InformationReq, L2CAP_EchoReq) are not covered in this section.

The following states and transitions are illustrated in Figure 6.1 on page 76.

6.1.1 CLOSED state

Event	Condition	Action	Next State
OpenChannel_req	-	Send L2CAP_ConnectReq	WAIT_CONNECT_RSP
L2CAP_ConnectReq	Normal, connection is possible	Send L2CAP_ConnectRsp (success)	CONFIG (substate WAIT_CONFIG)
L2CAP_ConnectReq	Need to indicate pending	Send L2CAP_ConnectRsp (pending)	WAIT_CONNECT
L2CAP_ConnectReq	No resource, not approved, etc	Send L2CAP_ConnectRsp (refused)	CLOSED
L2CAP_ConnectRsp	-	Ignore	CLOSED
L2CAP_ConfigReq	-	Send L2CAP_CommandReject (with reason Invalid CID)	CLOSED
L2CAP_ConfigRsp	-	Ignore	CLOSED
L2CAP_DisconnectReq	-	Send L2CAP_DisconnectRsp	CLOSED
L2CAP_DisconnectRsp	-	Ignore	CLOSED
L2CAP_Data	-	Ignore	CLOSED

Table 6.1: CLOSED state event table.

Notes:

- The L2CAP_ConnectReq message is not mentioned in any of the other states apart from the CLOSED state, as it triggers the establishment of a new channel, thus the branch into a new instance of the state machine.

6.1.2 WAIT_CONNECT_RSP state

Event	Condition	Action	Next State
L2CAP_ConnectRsp	Success indicated in result	Send L2CAP_ConfigReq	CONFIG (substate WAIT_CONFIG)
L2CAP_ConnectRsp	Result pending	-	WAIT_CONNECT_RSP
L2CAP_ConnectRsp	Remote side refuses connection	-	CLOSED
L2CAP_ConfigReq	-	Send L2CAP_CommandReject (with reason Invalid CID)	WAIT_CONNECT_RSP
L2CAP_ConfigRsp	-	Ignore	WAIT_CONNECT_RSP
L2CAP_DisconnectRsp	-	Ignore	WAIT_CONNECT_RSP
L2CAP_Data	-	Ignore	WAIT_CONNECT_RSP

Table 6.2: WAIT_CONNECT_RSP state event table.

Notes:

- An L2CAP_DisconnectReq message is not included here, since the Source and Destination CIDs are not available yet to relate it correctly to the state machine of a specific channel.

6.1.3 WAIT_CONNECT state

Event	Condition	Action	Next State
OpenChannel_Rsp	Pending connection request is finally acceptable	Send L2CAP_Connect_Rsp (success)	CONFIG (substate WAIT_CONFIG)
OpenChannel_Rsp	Pending connection request is finally refused	Send L2CAP_Connect_Rsp (refused)	CLOSED
L2CAP_ConnectRsp	-	Ignore	WAIT_CONNECT
L2CAP_ConfigRsp	-	Ignore	WAIT_CONNECT
L2CAP_DisconnectRsp	-	Ignore	WAIT_CONNECT
L2CAP_Data	-	Ignore	WAIT_CONNECT

Table 6.3: WAIT_CONNECT state event table.

Notes:

- An L2CAP_DisconnectReq or L2CAP_ConfigReq message is not included here, since the Source and Destination CIDs are not available yet to relate it correctly to the state machine of a specific channel.

6.1.4 CONFIG state

As it is also described in Section 7.1 on page 79, both L2CAP entities initiate a configuration request during the configuration process. This means that each device adopts an initiator role for the outgoing configuration request, and an acceptor role for the incoming configuration request. Configurations in both directions may occur sequentially, but can also occur in parallel.

The following substates are distinguished within the CONFIG state:

- WAIT_CONFIG – a device has sent or received a connection response, but has neither initiated a configuration request yet, nor received a configuration request with acceptable parameters.
- WAIT_SEND_CONFIG – for the initiator path, a configuration request has not yet been initiated, while for the response path, a request with acceptable options has been received.
- WAIT_CONFIG_REQ_RSP – for the initiator path, a request has been sent but a positive response has not yet been received, and for the acceptor path, a request with acceptable options has not yet been received.
- WAIT_CONFIG_RSP – the acceptor path is complete after having responded to acceptable options, but for the initiator path, a positive response on the recent request has not yet been received.
- WAIT_CONFIG_REQ – the initiator path is complete after having received a positive response, but for the acceptor path, a request with acceptable options has not yet been received.

According to Section 6.1.1 on page 68 and Section 6.1.2 on page 69, the CONFIG state is entered via WAIT_CONFIG substate from either the CLOSED state, the WAIT_CONNECT state, or the WAIT_CONNECT_RSP state. The CONFIG state is left for the OPEN state if both the initiator and acceptor paths complete successfully.

For better overview, separate tables are given: Table 6.4 shows the success transitions; therein, transitions on one of the minimum paths (no previous non-success transitions) are shaded. Table 6.5 on page 71 shows the non-success transitions within the configuration process, and Table 6.6 on page 72 shows further transition cause by events not belonging to the configuration process itself. The following configurtion states and transitions are illustrated in Figure 6.2 on page 77.

Previous state	Event	Condition	Action	Next State
WAIT_CONFIG	*ConfigureChannel_Req*	-	Send L2CAP_Config Req	WAIT_CONFIG _REQ_RSP
WAIT_CONFIG	L2CAP_ConfigReq	Options acceptable	Send L2CAP_Config Rsp (success)	WAIT_SEND _CONFIG

Table 6.4: CONFIG state/substates event table: success transitions within configuration process.

Previous state	Event	Condition	Action	Next State
WAIT_CONFIG _REQ_RSP	L2CAP_ConfigReq	Options acceptable	Send L2CAP_Config Rsp (success)	WAIT_CONFIG _RSP
WAIT_CONFIG _REQ_RSP	L2CAP_ConfigRsp	Remote side accepts options	- (continue waiting for configuration request)	WAIT_CONFIG _REQ
WAIT_CONFIG _REQ	L2CAP_ConfigReq	Options acceptable	Send L2CAP_Config Rsp (success)	OPEN
WAIT_SEND _CONFIG	*ConfigureChannel_ Req*	-	Send L2CAP_Config Req	WAIT_CONFIG _RSP
WAIT_CONFIG _RSP	L2CAP_ConfigRsp	Remote side accepts options	-	OPEN

Table 6.4: CONFIG state/substates event table: success transitions within configuration process.

Previous state	Event	Condition	Action	Next State
WAIT_CONFIG	L2CAP_ConfigReq	Options not acceptable	Send L2CAP_Config Rsp (fail)	WAIT_CONFIG
WAIT_CONFIG	L2CAP_ConfigRsp	-	Ignore	WAIT_CONFIG
WAIT_SEND _CONFIG	L2CAP_ConfigRsp	-	Ignore	WAIT_SEND _CONFIG
WAIT_CONFIG _REQ_RSP	L2CAP_ConfigReq	Options not acceptable	Send L2CAP_Config Rsp (fail)	WAIT_CONFIG _REQ_RSP
WAIT_CONFIG _REQ_RSP	L2CAP_ConfigRsp	Remote side rejects options	Send L2CAP_Config Req (new options)	WAIT_CONFIG _REQ_RSP
WAIT_CONFIG _REQ	L2CAP_ConfigReq	Options not acceptable	Send L2CAP_Config Rsp (fail)	WAIT_CONFIG _REQ
WAIT_CONFIG _REQ	L2CAP_ConfigRsp	-	Ignore	WAIT_CONFIG _REQ
WAIT_CONFIG _RSP	L2CAP_ConfigRsp	Remote side rejects options	Send L2CAP_Config Req (new options)	WAIT_CONFIG _RSP

Table 6.5: CONFIG state/substates event table: non-success transitions within configuration process.

Previous state	Event	Condition	Action	Next State
CONFIG (any substate)	*CloseChannel_Req*	Any internal reason to stop	Send L2CAP_ Disconnect Req	WAIT_ DISCONNECT
CONFIG (any substate)	L2CAP_Disconnect Req	-	Send L2CAP_ Disconnect Rsp	CLOSED
CONFIG (any substate)	L2CAP_Disconnect Rsp	-	Ignore	CONFIG (remain in sub-state)
CONFIG (any substate)	L2CAP_Data	-	Process the PDU	CONFIG (remain in sub-state)

Table 6.6: CONFIG state/substates event table: events not related to configuration process.

Notes:

- Receiving data PDUs (L2CAP_Data) in CONFIG state should be relevant only in case of a transition to a reconfiguration procedure (from OPEN state). Discarding the received data is allowed only in Retransmission Mode. Discarding an S-frame is allowed but not recommended. If a S-frame is discarded, the monitor timer will cause a new S-frame to be sent after a time out.
- Indicating a failure in a configuration response does not necessarily imply a failure of the overall configuration procedure; instead, based on the information received in the negative response, a modified configuration request may be triggered.

6.1.5 OPEN state

Event	Condition	Action	Next State
SendData_req	-	Send L2CAP_Data packet according to configured mode	OPEN
ReconfigureChannel_req	-	Complete outgoing SDU Send L2CAP_ConfigReq	CONFIG (substate WAIT_CONFIG_RSP)
CloseChannel_req	-	Send L2CAP_DisconnectReq	WAIT_DISCONNECT
L2CAP_ConnectRsp	-	Ignore	OPEN
L2CAP_ConfigReq	Incoming config. options acceptable	Complete outgoing SDU Send L2CAP_ConfigRsp (ok)	CONFIG (substate WAIT_CONFIG_REQ)
L2CAP_ConfigReq	Incoming config. options not acceptable	Complete outgoing SDU Send L2CAP_ConfigRsp (fail)	OPEN
L2CAP_DisconnectReq	-	Send L2CAP_DisconnectRsp	CLOSED
L2CAP_DisconnectRsp	-	Ignore	OPEN
L2CAP_Data	-	Process the PDU	OPEN

Table 6.7: OPEN state event table.

6.1.6 WAIT_DISCONNECT state

Event	Condition	Action	Next State
L2CAP_ConnectRsp	-	Ignore	WAIT_DISCONNECT
L2CAP_ConfigReq	-	Send L2CAP_CommandReject with reason Invalid CID	WAIT_DISCONNECT
L2CAP_ConfigRsp	-	Ignore	WAIT_DISCONNECT
L2CAP_DisconnectReq	-	Send L2CAP_DisconnectRsp	CLOSED
L2CAP_DisconnectRsp	-	-	CLOSED
L2CAP_Data	-	Ignore	WAIT_DISCONNECT

Table 6.8: WAIT_DISCONNECT state event table.

6.2 TIMERS EVENTS

6.2.1 RTX

The Response Timeout eXpired (RTX) timer is used to terminate the channel when the remote endpoint is unresponsive to signalling requests. This timer is started when a signalling request (see Section 7 on page 79) is sent to the remote device. This timer is disabled when the response is received. If the initial timer expires, a duplicate Request message may be sent or the channel identified in the request may be disconnected. If a duplicate Request message is sent, the RTX timeout value shall be reset to a new value at least double the previous value. When retransmitting the Request message, the context of the same state shall be assumed as with the original transmission. If a Request message is received that is identified as a duplicate (retransmission), it shall (should??) be processed in the context of the same state which applied when the original Request message was received.

Implementations have the responsibility to decide on the maximum number of Request retransmissions performed at the L2CAP level before terminating the channel identified by the Requests. The one exception is the signalling CID that should never be terminated. The decision should be based on the flush timeout of the signalling link. The longer the flush timeout, the more retransmissions may be performed at the physical layer and the reliability of the channel improves, requiring fewer retransmissions at the L2CAP level.

For example, if the flush timeout is infinite, no retransmissions should be performed at the L2CAP level. When terminating the channel, it is not necessary to send a L2CAP_DisconnectReq and enter WAIT_DISCONNECT state. Channels can be transitioned directly to the CLOSED state.

The value of this timer is implementation-dependent but the minimum initial value is 1 second and the maximum initial value is 60 seconds. One RTX timer shall exist for each outstanding signalling request, including each Echo Request. The timer disappears on the final expiration, when the response is received, or the physical link is lost. The maximum elapsed time between the initial start of this timer and the initiation of channel termination (if no response is received) is 60 seconds.

6.2.2 ERTX

The Extended Response Timeout eXpired (ERTX) timer is used in place of the RTX timer when it is suspected the remote endpoint is performing additional processing of a request signal. This timer is started when the remote endpoint responds that a request is pending, e.g., when an L2CAP_ConnectRsp event with a "connect pending" result (0x0001) is received. This timer is disabled when the formal response is received or the physical link is lost. If the initial timer expires, a duplicate Request may be sent or the channel may be disconnected.

If a duplicate Request is sent, the particular ERTX timer disappears, replaced by a new RTX timer and the whole timing procedure restarts as described previously for the RTX timer.

The value of this timer is implementation-dependent but the minimum initial value is 60 seconds and the maximum initial value is 300 seconds. Similar to RTX, there MUST be at least one ERTX timer for each outstanding request that received a Pending response. There should be at most one (RTX or ERTX) associated with each outstanding request. The maximum elapsed time between the initial start of this timer and the initiation of channel termination (if no response is received) is 300 seconds. When terminating the channel, it is not necessary to send a L2CAP_DisconnectReq and enter WAIT_DISCONNECT state. Channels should be transitioned directly to the CLOSED state.

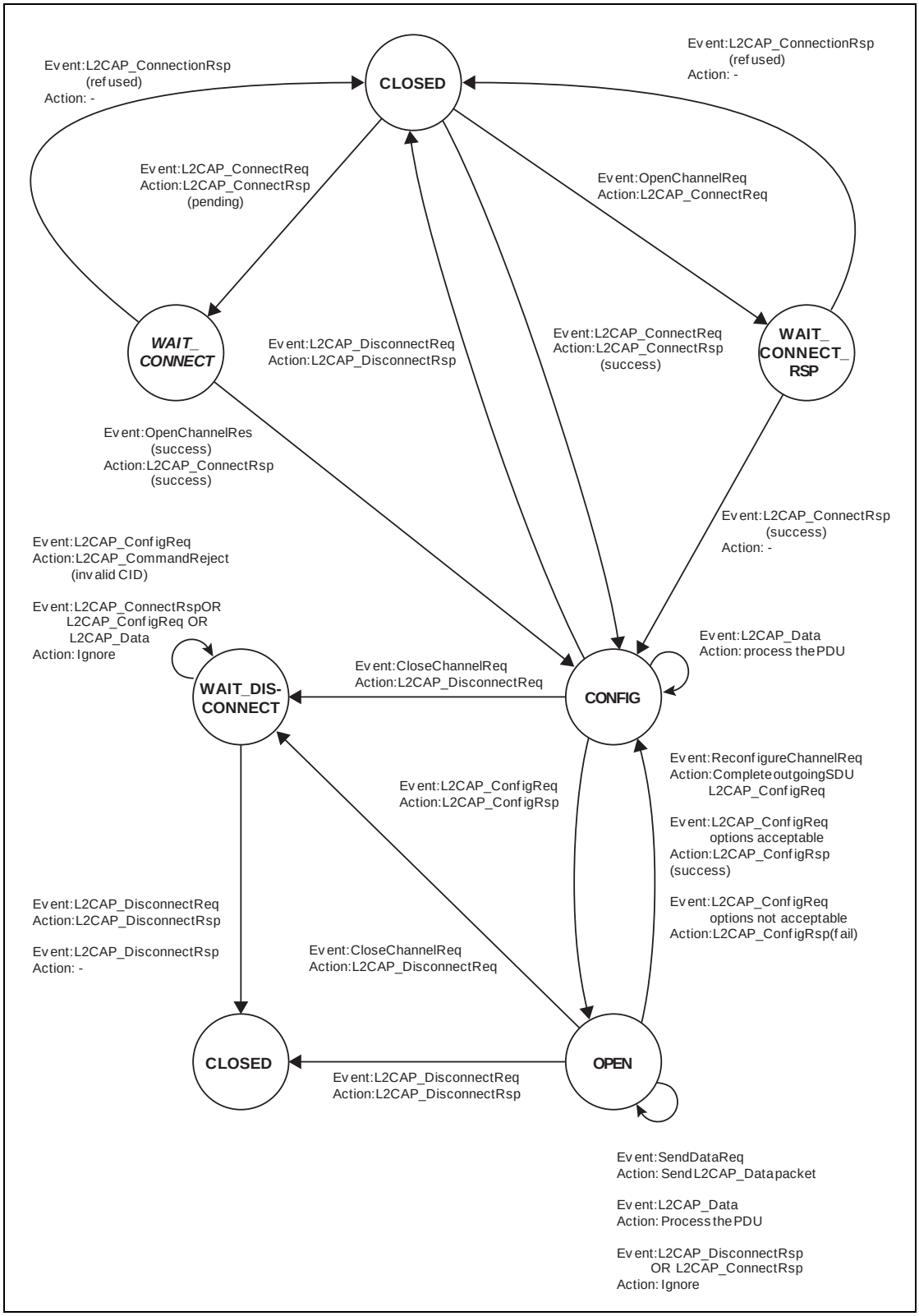

Figure 6.1: States and transitions.

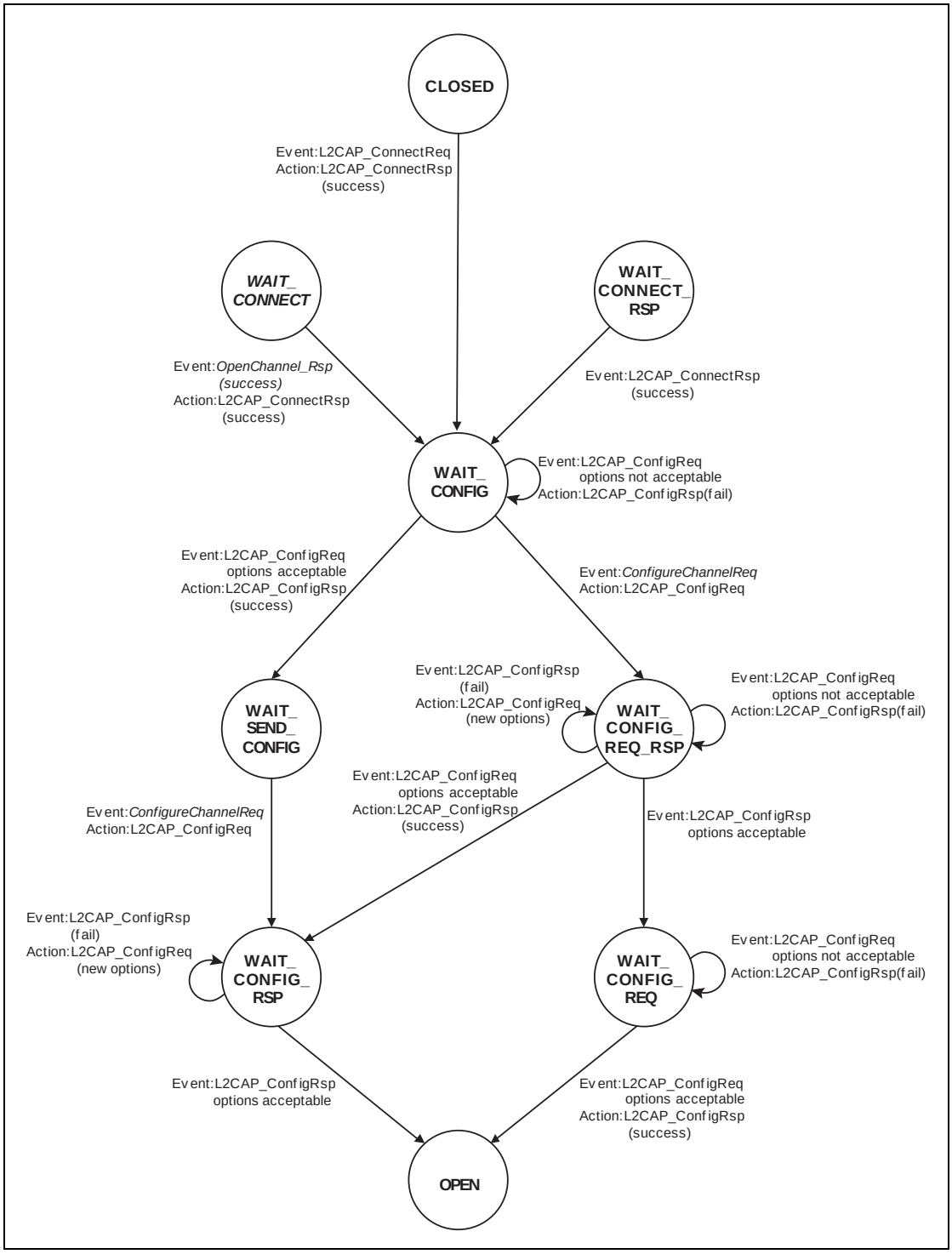

Figure 6.2: Configuration states and transitions.

7 GENERAL PROCEDURES

This section describes the general operation of L2CAP, including the configuration process, the handling and the processing of user data for transportation over the air interface. This section also describes the operation of L2CAP features including the delivery of erroneous packets, the flushing of expired data and operation in connectionless mode.

Procedures for the flow control and retransmission modes are described in Section 8 on page 87.

7.1 CONFIGURATION PROCESS

Configuring the channel parameters shall be done independently for both directions. Both configurations may be done in parallel. For each direction the following procedure shall be used:

1. Informing the remote side of the non-default parameters that the local side will accept using a Configuration Request
2. Remote side responds, agreeing or disagreeing with these values, including the default ones, using a Configuration Response.
3. The local and remote devices repeat steps (1) and (2) until agreement on all parameters is reached.

This process can be abstracted into the initial Request configuration path and a Response configuration path, followed by the reverse direction phase. Reconfiguration follows a similar two-phase process by requiring configuration in both directions.

The decision on the amount of time (or messages) spent configuring the channel parameters before terminating the configuration is left to the implementation, but it shall not last more than 120 seconds.

7.1.1 Request path

The Request Path can configure the following:

- requester's incoming MTU.
- requester's outgoing flush timeout.
- requester's outgoing QoS.
- requester's incoming flow and error control information.

Table 7.1 on page 80 defines the configuration options that may be placed in a Configuration Request.

Parameter	Description
MTU	Incoming MTU information
FlushTO	Outgoing flush timeout
QoS	Outgoing QoS information
RFCMode	Incoming Retransmission and Flow Control Mode

Table 7.1: Parameters allowed in Request

The state machine for the configuration process is described in Section 6 on page 67.

7.1.2 Response path

The Response Path can configure the following:

- responder's outgoing MTU, that is the remote side's incoming MTU.
- remote side's flush timeout.
- responder's incoming QoS Flow Specification (remote side's outgoing QoS Flow Specification).
- responder's Outgoing Flow and Error Control information

If a request-oriented parameter is not present in the Request message (reverts to last agreed value), the remote side may negotiate for a non-default value by including the proposed value in a negative Response message.

Parameter	Description
MTU	Outgoing MTU information
FlushTO	Incoming flush timeout
QoS	Incoming QoS information
RFCMode	Outgoing Retransmission and Flow Control Mode

Table 7.2: Parameters allowed in Response

7.2 FRAGMENTATION AND RECOMBINATION

Fragmentation is the breaking down of PDUs into smaller pieces for delivery from L2CAP to the lower layer. Recombination is the process of reassembling a PDU from fragments delivered up from the lower layer. Fragmentation and Recombination may be applied to any L2CAP PDUs.

7.2.1 Fragmentation of L2CAP PDUs

An L2CAP implementation may fragment any L2CAP PDU for delivery to the lower layers. If L2CAP runs directly over the link controller protocol, then an implementation may fragment the PDU into multiple baseband packets for transmission over the air. If L2CAP runs above the host controller interface, then an implementation may send HCI transport sized fragments to the Controller which passes them to the baseband. All L2CAP fragments associated with an L2CAP PDU shall be passed to the baseband before any other L2CAP PDU for the same logical transport shall be sent.

The two LLID bits defined in the first octet of baseband payload (also called the frame header) are used to signal the start and continuation of L2CAP PDUs. LLID shall be ’10’ for the first segment in an L2CAP PDU and ’01’ for a continuation segment. An illustration of fragmentation is shown in Figure 7.1 on page 81. An example of how fragmentation might be used in a device with HCI is shown in Figure 7.2 on page 82.

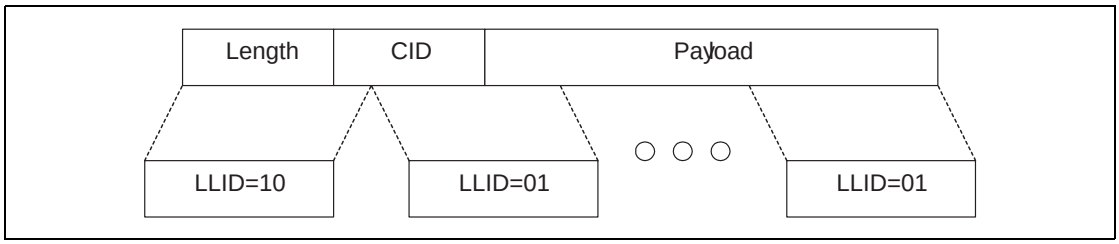

Figure 7.1: L2CAP fragmentation.

Note: The link controller is able to impose a different fragmentation on the PDU by using "start" and "continuation" indications as fragments are translated into baseband packets. Thus, both L2CAP and the link controller use the same mechanism to control the size of fragments.

7.2.2 Recombination of L2CAP PDUs

The link controller protocol attempts to deliver ACL packets in sequence and protects the integrity of the data using a 16-bit CRC. When errors are detected by the baseband it uses an automatic repeat request (ARQ) mechanism.

Recombination of fragments may occur in the Controller but ultimately it is the responsibility of L2CAP to reassemble PDUs and SDUs and to check the length field of the SDUs. As the baseband controller receives ACL packets, it either signals the L2CAP layer on the arrival of each baseband packet, or accumulates a number of packets (before the receive buffer fills up or a timer expires) before passing fragments to the L2CAP layer.

An L2CAP implementation shall use the length field in the header of L2CAP PDUs, see Section 3 on page 33, as a consistency check and shall discard any L2CAP PDUs that fail to match the length field. If channel reliability is not needed, packets with invalid lengths may be silently discarded. For reliable channels, an L2CAP implementation shall indicate to the upper layer that the channel has become unreliable. Reliable channels are defined by having an infinite flush timeout value as specified in Section 5.2 on page 59. For higher data integrity L2CAP should be operated in the Retransmission Mode.

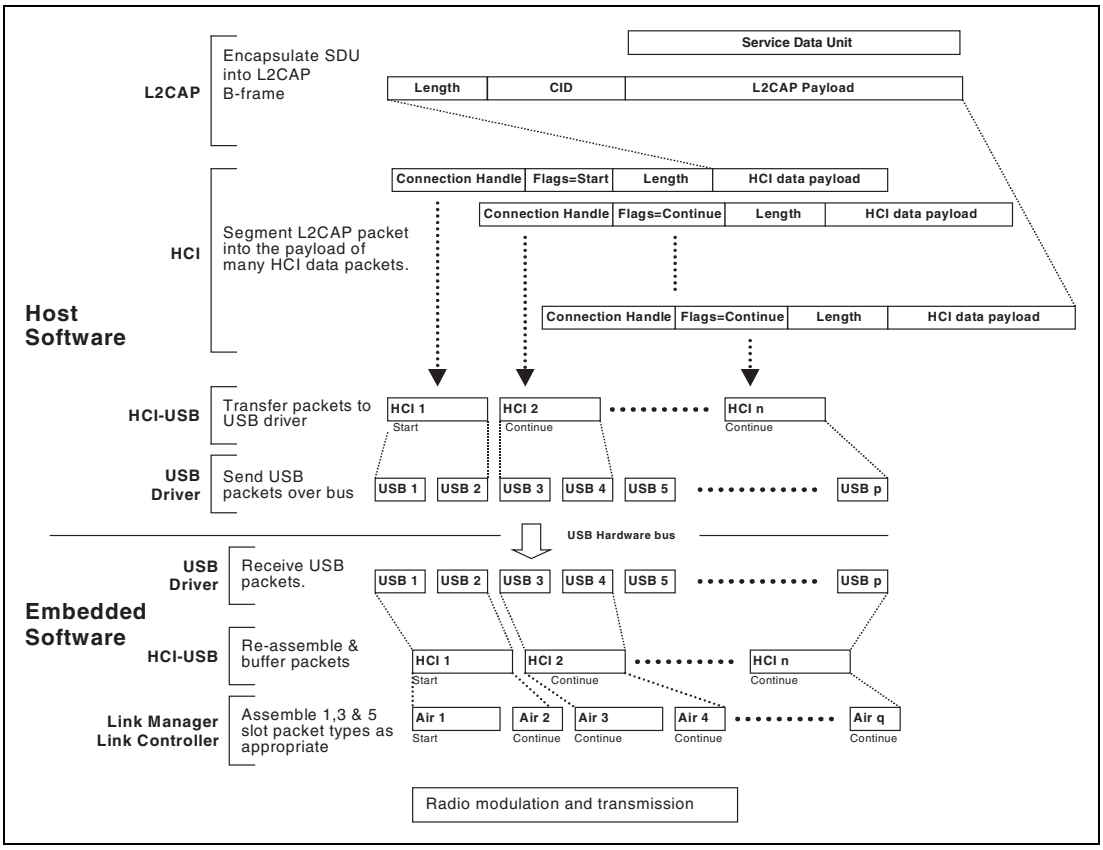

Figure 7.2: Example of fragmentation processes in a device with HCI.

7.3 ENCAPSULATION OF SDUs

All SDUs are encapsulated into one or more L2CAP PDUs.

In Basic L2CAP mode, an SDU shall be encapsulated with a minimum of L2CAP protocol elements, resulting in a type of L2CAP PDU called a Basic Information Frame (B-frame).

Segmentation and Reassembly operations are only used in Retransmission mode and Flow Control mode. SDUs may be segmented into a number of smaller packets called SDU segments. Each segment shall be encapsulated with L2CAP protocol elements resulting in an L2CAP PDU called an Information Frame (I-frame).

The maximum size of an SDU segment shall be given by the Maximum PDU Payload Size (MPS). The MPS parameter may be exported using an implementation specific interface to the upper layer.

Note that this specification does not have a normative service interface with the upper layer, nor does it assume any specific buffer management scheme of a host implementation. Consequently, a reassembly buffer may be part of the upper layer entity. It is assumed that SDU bounderies shall be preserved between peer upper layer entities.

7.3.1 Segmentation of L2CAP SDUs

In Flow Control or Retransmission modes, incoming SDUs may be broken down into segments, which shall then be individually encapsulated with L2CAP protocol elements (header and checksum fields) to form I-frames. I-frames are subject to flow control and may be subject to retransmission procedures. The header carries a 2 bit SAR field that is used to identify whether the I-frame is a 'start', 'end' or 'continuation' packet or whether it carries a complete, unsegmented SDU. Figure 7.3 on page 83 illustrates segmentation and fragmentation.

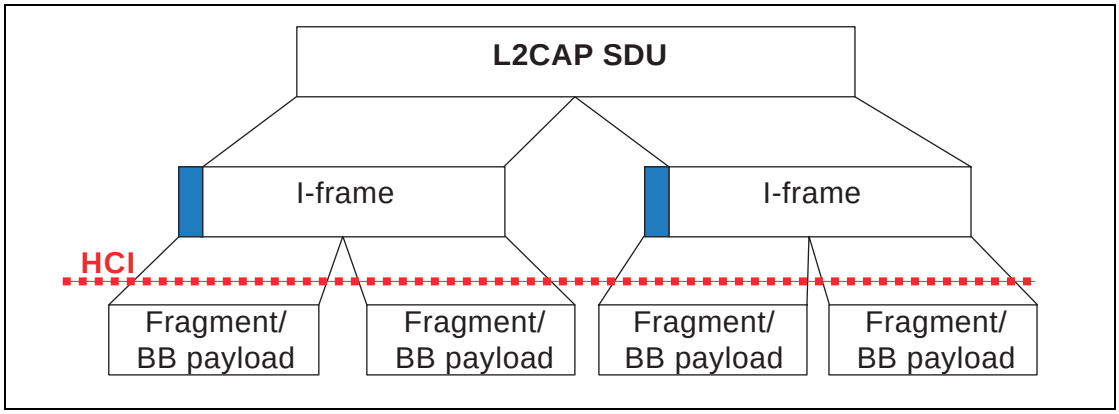

Figure 7.3: Segmentation and fragmentation of an SDU.

7.3.2 Reassembly of L2CAP SDUs

The receiving side uses the SAR field of incoming 'I-frames' for the reassembly process. The L2CAP SDU length field, present in the "start of SDU" I-frame, is an extra integrity check, and together with the sequence numbers may be used to indicate lost L2CAP SDUs to the application. Figure 7.3 on page 83 illustrates segmentation and fragmentation.

7.3.3 Segmentation and fragmentation

Figure 7.4 on page 84 illustrates the use of segmentation and fragmentation operations to transmit a single SDU. Note that while SDUs and L2CAP PDUs are transported in peer-to-peer fashion, the fragment size used by the Fragmentation and Recombination routines is implementation specific and may not be the same in the sender and the receiver. The over-the-air sequence of baseband packets as created by the sender is common to both devices.

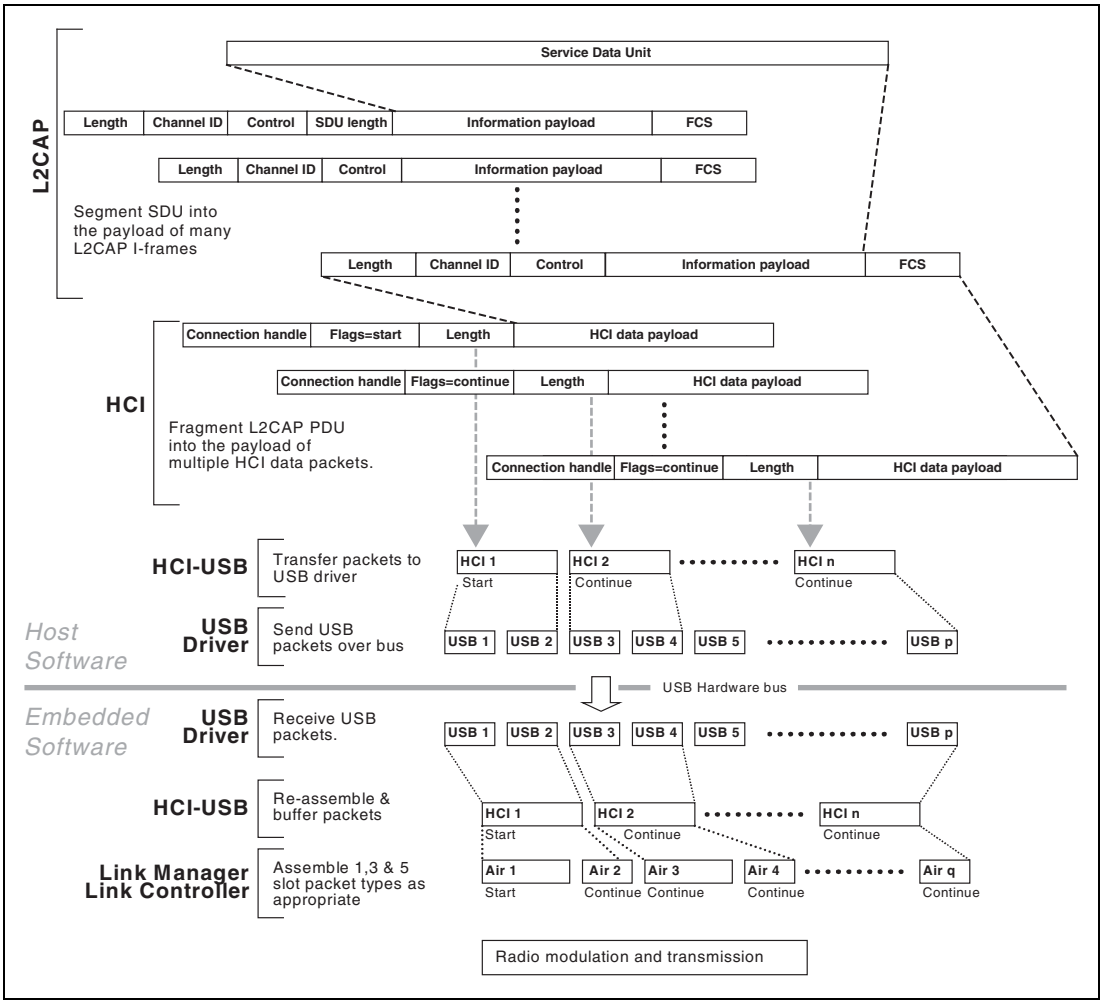

Figure 7.4: Example of segmentation and fragment processes in a device with HCI[1]

1. For simplicity, the stripping of any additional HCI and USB specific information fields prior to the creation of the baseband packets (Air_1, Air_2, etc.) is not shown in the figure.

7.4 DELIVERY OF ERRONEOUS L2CAP SDUS

Some applications may require corrupted or incomplete L2CAP SDUs to be delivered to the upper layer. If delivery of erroneous L2CAP SDUs is enabled, the receiving side will pass information to the upper layer on which parts of the L2CAP SDU (i.e., which L2CAP frames) have been lost, failed the error check, or passed the error check. If delivery of erroneous L2CAP SDUs is disabled, the receiver shall discard any L2CAP SDU segment with any missing frames or any frames failing the error checks. L2CAP SDUs whose length field does not match the actual frame length shall also be discarded.

7.5 OPERATION WITH FLUSHING

In the L2CAP configuration, the Flush Time-Out may be set separately per L2CAP channel, but there is only one flush mechanism per ACL logical transport in the baseband.

When there is more than one L2CAP channel mapped to the same ACL logical transport, the automatic flush time-out does not discriminate between L2CAP channels. The automatic flush time-out flushes a specific L2CAP PDU. The HCI Flush command flushes all outstanding L2CAP PDUs for the ACL logical transport. Therefore, care has to be taken when using the Automatic Flush Time-out and the HCI Flush command:

1. For any connection to be reliable at the L2CAP level, it should use L2CAP retransmission mode if it is mapped to an ACL logical transport with a finite automatic flush time-out. In retransmission mode, loss of flushed L2CAP PDUs on the channel is detected by the L2CAP ARQ mechanism and they are retransmitted.
2. There is only one automatic flush time-out setting per ACL logical transport. Therefore, all time bounded L2CAP channels on an ACL logical transport with a flush time-out setting should configure the same flush time-out value at the L2CAP level.
3. If Automatic Flush Time-out is used, then it should be taken into account that it only flushes one L2CAP PDU. If one PDU has timed out and needs flushing, then others on the same logical transport are also likely to need flushing. Therefore, when retransmission mode is used, flushing should be handled by the HCI Flush command so that all outstanding L2CAP PDUs are flushed.

7.6 CONNECTIONLESS DATA CHANNEL

In addition to connection-oriented channels, L2CAP also has a connectionless channel. The connectionless channel allows transmission to all members of the piconet. Data sent through the connectionless channel is sent in a best-effort manner. The connectionless channel has no quality of service and is unreliable. L2CAP makes no guarantee that data sent through the connectionless channel successfully reaches all members of the piconet. If reliable group transmission is required, it must be implemented at a higher layer.

Transmissions to the connectionless channel will be sent to all members of the piconet. If this data is not for transmission to all members of the piconet, then higher level encryption is required to support private communication.

The local device will not receive transmissions on the conectionless channel, therefore, higher layer protocols must loopback any data traffic being sent to the local device.

An L2CAP service interface could provide basic group management mechanisms including creating a group, adding members to a group, and removing members from a group.

Connectionless data channels shall not be used with Retransmission Mode or Flow Control Mode.

8 PROCEDURES FOR FLOW CONTROL AND RETRANSMISSION

When Flow Control mode or Retransmission mode is used, the procedures defined in this chapter shall be used. Including the numbering of information frames, the handling of SDU segmentation and reassembly, and the detection and notification of errored frames. Retransmission mode also allows the sender to resend errored frames on request from the receiver.

8.1 INFORMATION RETRIEVAL

Before attempting to configure flow control- or retransmission mode on a channel, it is mandatory to verify that the suggested mode is supported by performing an information retrieval for the "Extended features supported" information type (0x0002). If the information retrieval is not successful or the "Extended features mask" bit is not set for the wanted mode, the mode shall not be suggested in a configuration request.

8.2 FUNCTION OF PDU TYPES FOR FLOW CONTROL AND RETRANSMISSION

Two frame formats are defined for flow control and retransmission modes (see Section 3.3 on page 35). The I-frame is used to transport user information instead of the B-frame. The S-frame is used for signalling.

8.2.1 Information frame (I-frame)

I-frames are sequentially numbered frames containing information fields. I-frames also include the functionality of RR frames (see below).

8.2.2 Supervisory Frame (S-frame)

The S-frame is used to control the transmission of I-frames. The S-frame has two formats: Receiver Ready (RR) and Reject (REJ).

8.2.2.1 Receiver Ready (RR)

The receiver ready (RR) S-frame is used to:

1. Acknowledge I-frames numbered up to and including ReqSeq - 1.
2. Enable or disable retransmission of I-frames by updating the receiver with the current status of the Retransmission Disable Bit.

The RR frame has no information field.

8.2.2.2 Reject (REJ)

The reject (REJ) S-frame is used to request retransmission of all I-frames starting with the I-frame with TxSeq equal to ReqSeq specified in the REJ. The value of ReqSeq in the REJ frame acknowledges I-frames numbered up to and including ReqSeq - 1. I-frames that have not been transmitted, shall be transmitted following the retransmitted I-frames.

When a REJ is transmitted, it triggers a REJ Exception condition. A second REJ frame shall not be transmitted until the REJ Exception condition is cleared. The receipt of an I-frame with a TxSeq equal to the ReqSeq of the REJ frame clears the REJ Exception. The REJ Exception condition only applies to traffic in one direction. Note: this means that only valid I-frames can be rejected.

8.3 VARIABLES AND SEQUENCE NUMBERS

The sending peer uses the following variables and Sequence numbers:

- TxSeq – the send Sequence number used to sequentially number each new I-frame transmitted.
- NextTxSeq – the Sequence number to be used in the next new I-frame transmitted.
- ExpectedAckSeq – the Sequence number of the next I-frame expected to be acknowledged by the receiving peer.

The receiving peer uses the following variables and Sequence numbers:

- ReqSeq – The Sequence number sent in an acknowledgement frame to request transmission of I-frame with TxSeq = ReqSeq and acknowledge receipt of I-frames up to and including (ReqSeq-1)
- ExpectedTxSeq – the value of TxSeq expected in the next I-frame.
- BufferSeq – When segmented I-frames are buffered this is used to delay acknowledgement of received I-frame so that new I-frame transmissions do not cause buffer overflow.

All variables have the range 0 to 63. Arithmetic operations on state variables (NextTXSeq, ExpectedTxSeq, ExpectedAckSeq, BufferSeq) and sequence numbers (TxSeq, ReqSeq) contained in this document shall be taken modulo 64.

To perform Modulo 64 operation on negative numbers multiples of 64 shall be added to the negative number until the result becomes non-negative.

8.3.1 Sending peer

8.3.1.1 Send sequence number TxSeq

I-frames contain TxSeq, the send sequence number of the I-frame. When an I-frame is first transmitted, TxSeq is set to the value of the send state variable NextTXSeq. TxSeq is not changed if the I-frame is retransmitted.

8.3.1.2 Send state variable NextTXSeq

The CID sent in the information frame is the destination CID and identifies the remote endpoint of the channel. A send state variable NextTxSeq shall be maintained for each remote endpoint. NextTxSeq is the sequence number of the next in-sequence I-frame to be transmitted to that remote endpoint. When the link is created NextTXSeq shall be initialized to 0.

The value of NextTxSeq shall be incremented by 1 after each in-sequence I-frame transmission, and shall not exceed ExpectedAckSeq by more than the maximum number of outstanding I-frames (TxWindow). The value of TxWindow shall be in the range 1 to 32.

8.3.1.3 Acknowledge state variable ExpectedAckSeq

The CID sent in the information frame is the destination CID and identifies the remote endpoint of the channel. An acknowledge state variable ExpectedAck-Seq shall be maintained for each remote endpoint. ExpectedAckSeq is the sequence number of the next in-sequence I-frame that the remote receiving peer is expected to acknowledge. (ExpectedAckSeq – 1 equals the TxSeq of the last acknowledged I-frame). When the link is created ExpectedAckSeq shall be initialized to 0.
Note that if the next acknowledgement acknowledges a single I-frame then it's ReqSeq will be expectedAckSeq + 1.

If a valid ReqSeq is received from the peer then ExpectedAckSeq is set to ReqSeq. A valid ReqSeq value is one that is in the range ExpectedAckSeq ≤ ReqSeq ≤ NextTxSeq.

Note: The comparison with NextTXSeq must be ≤ in order to handle the situations where there are no outstanding I-frames.

These inequalities shall be interpreted in the following way: ReqSeq is valid, if and only if (ReqSeq-ExpectedAckSeq) mod 64 ≤ (NextTXSeq-ExpectedAck-Seq) mod 64. Furthermore, from the description of NextTXSeq, it can be seen that (NextTXSeq-ExpectedAckSeq) mod 64 ≤ TxWindow.

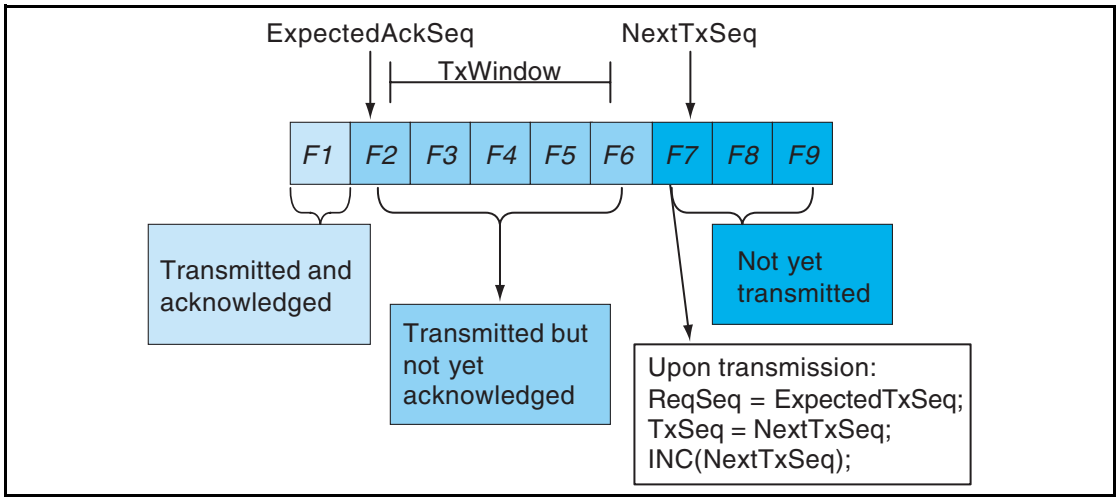

Figure 8.1: Example of the transmitter side

Figure 8.1 on page 90 shows TxWindow=5, and three frames awaiting transmission. The frame with number *F7* may be transmitted when the frame with *F2* is acknowledged. When the frame with *F7* is transmitted, TxSeq is set to the value of NextTXSeq. After TxSeq has been set, NextTxSeq is incremented.

The sending peer expects to receive legal ReqSeq values, these are in the range ExpectedAckSeq up to and including NextTxSeq. Upon receipt of a ReqSeq value equal to the current NextTxSeq all outstanding I-frames have been acknowledged by the receiver.

8.3.2 Receiving peer

8.3.2.1 Receive sequence number ReqSeq

All I-frames and S-frames contain ReqSeq, the send Sequence number (TxSeq) that the receiving peer requests in the next I-frame.

When an I-frame or an S-frame is transmitted, the value of ReqSeq shall be set to the current value of the receive state variable ExpectedTxSeq or the buffer state variable BufferSeq. The value of ReqSeq shall indicate that the data link layer entity transmitting the ReqSeq has correctly received all I-frames numbered up to and including ReqSeq – 1.

Note: The option to set ReqSeq to BufferSeq instead of ExpectedTxSeq allows the receiver to impose flow control for buffer management or other purposes. In this situation, if BufferSeq<>ExpectedTxSeq, the receiver should also set the retransmission disable bit to 1 to prevent unnecessary retransmissions.

8.3.2.2 Receive state variable, ExpectedTxSeq

Each channel shall have a receive state variable (ExpectedTxSeq). The receive state variable is the sequence number (TxSeq) of the next in-sequence I-frame expected.

The value of the receive state variable shall be the last in-sequence, valid I-frame received.

8.3.2.3 Buffer state variable BufferSeq

Each channel may have an associated BufferSeq. BufferSeq is used to delay acknowledgement of frames until they have been pulled by the upper layers, thus preventing buffer overflow. BufferSeq and ExpectedTxSeq are equal when there is no extra segmentation performed and frames are pushed to the upper layer immediately on reception. When buffer space is scarce, for example when frames reside in the buffer for a period, the receiver may choose to set ReqSeq to BufferSeq instead of ExpectedTxSeq, incrementing BufferSeq as buffer space is released. The windowing mechanism will ensure that transmission is halted when ExpectedTxSeq - BufferSeq is equal to TxWindow.

Note: Owing to the variable size of I-frames, updates of BufferSeq may be based on changes in available buffer space instead of delivery of I-frame contents.

I-Frames shall have sequence numbers in the range ExpectedTxSeq ≤ TxSeq < (BufferSeq + TxWindow).

On receipt of an I-frame with TxSeq equal to ExpectedTxSeq, ExpectedTxSeq shall be incremented by 1 regardless of how many I-frames with TxSeq greater than ExpectedTxSeq were previously received.

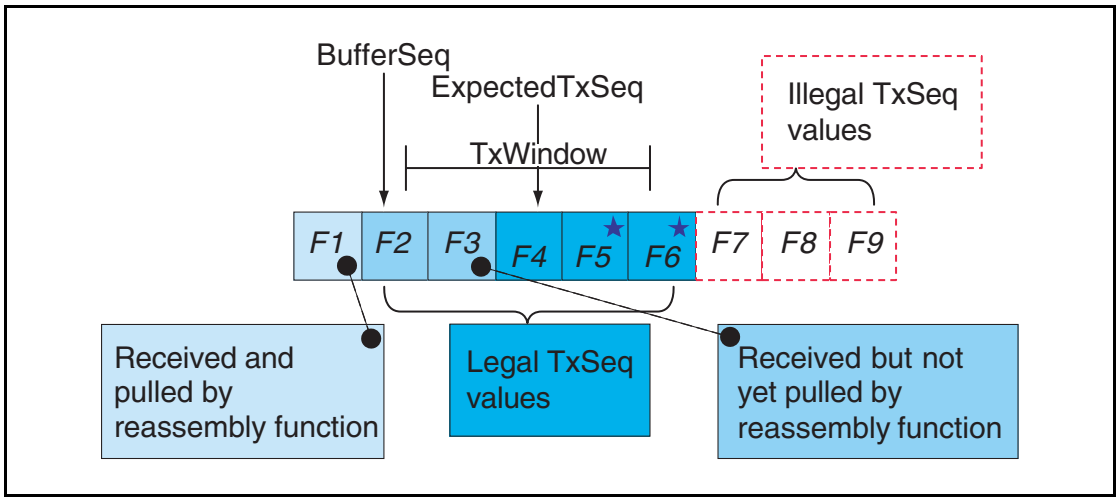

Figure 8.2: Example of the receiver side

Figure 8.2 on page 92 shows TxWindow=5. *F1* is successfully received and pulled by the upper layer. BufferSeq shows that *F2* is the next I-frame to be pulled, and ExpectedTxSeq points to the next I-frame expected from the peer. An I-frame with TxSeq equal to 5 has been received thus triggering an REJ exception. The star indicates I-frames received but discarded owing to the REJ exception. They will be resent as part of the error recovery procedure.

In Figure 8.2 on page 92 there are several I-frames in a buffer awaiting the SDU reassembly function to pull them and the TxWindow is full. The receiver would usually disable retransmission by setting the Retransmission Disable Bit to 1 and send an RR back to the sending side. This tells the transmitting peer that there is no point in performing retransmissions. Both sides will send S-frames to make sure the peer entity knows the current value of the Retransmission Disable Bit.

8.4 RETRANSMISSION MODE

8.4.1 Transmitting frames

A new I-frame shall only be transmitted when the TxWindow is not full. No I-frames shall be transmitted if the last RetransmissionDisableBit (R) received is set to one.

A previously transmitted I-frame may be retransmitted as a result of an error recovery procedure, even if the TxWindow is full. When an I-frame is retransmitted it shall always be sent with the same TxSeq value used in its initial transmission.

The state of the RetransmissionDisableBit (R) is stored and used along with the state of the RetransmissionTimer to decide the actions when transmitting I-frames. The RetransmissionTimer is running whenever I-frames have been sent but not acknowledged.

8.4.1.1 Last received R was set to zero

If the last R received was set to zero, then I-frames may be transmitted. If there are any I-frames which have been sent and not acknowledged then they shall be retransmitted when the RetransmissionTimer elapses. If the retransmission timer has not elapsed then a retransmission shall not be sent and only new I-frames may be sent.

a) If unacknowledged I-frames have been sent and the RetransmissionTimer has elapsed then an unacknowledged I-frame shall be retransmitted. The RetransmissionTimer shall be restarted.

b) If unacknowledged I-frames have been sent, the Retransmission timer has not elapsed then a new I-frame shall be sent if one is waiting and no timer action shall be taken.

c) If no unacknowledged I-frames have been sent, and a new I-frame is waiting, then the new I-frame shall be sent, the RetransmissionTimer shall be started and if the MonitorTimer is running, it shall be stopped.

d) If no unacknowledged I-frames have been sent and and no new I-frames are waiting to be transmitted, and the RetransmissionTimer is running, then the retransmission timer shall be stopped and the monitor timer shall be started.

The table below summarizes actions when the RetransmissionTimer is in use and R=0.

Unacknowledged I-frames sent = Retransmission Timer is running	**Retrans-mission Timer has elapsed**	**New I-frames are waiting**	**Transmit Action**	**Timer Action**
True	True	True or False	Retransmit un-acknowledged I-frame	Restart Retransmission Timer
True	False	True	Transmit new I-frame	No timer action
True	False	False	No transmit action	No Timer action
False	False	True	Transmit new I-frame	Restart Retransmis-sion Timer
False	False	False	No Transmit action	If MonitorTimer is not running then restart MonitorTimer

Table 8.1: Summary of actions when the RetransmissionTimer is in use and R=0.

If the RetransmissionTimer is not in use, no unacknowledged I-frames have been sent and no new I-frames are waiting to be transmitted

a) If the MonitorTimer is running and has not elapsed then no transmit action shall be taken and no timer action shall be taken.

b) If the MonitorTimer has elapsed then an S-frame shall be sent and the MonitorTimer shall be restarted.

If any I-frames become available for transmission then the MonitorTimer shall be stopped, the RetransmissionTimer shall be started and the rules for when the RetransmissionTimer is in use shall be applied.

When an I-frame is sent ReqSeq shall be set to ExpectedTxSeq, TxSeq shall be set to NextTxSeq and NextTxSeq shall be incremented by one.

8.4.1.2 Last received R was set to one

If the last R received was set to one, then I-frames shall not be transmitted. The only frames which may be sent are S-frames. An S-frame shall be sent according to the rules below:

a) If the MonitorTimer is running and has not elapsed then no transmit action shall be taken and no timer action shall be taken.

b) If the MonitorTimer has elapsed then an S-frame shall be sent and the MonitorTimer shall be restarted.

8.4.2 Receiving I-frames

Upon receipt of a valid I-frame with TxSeq equal to ExpectedTxSeq, the frame shall be accepted for the SDU reassembly function. ExpectedTxSeq is used by the reassembly function.

The first valid I-frame received after an REJ was sent, with a TxSeq of the received I-frame equal to ReqSeq of the REJ, shall clear the REJ Exception condition.

The ReqSeq shall be processed according to Section 8.4.6 on page 97.

If a valid I-frame with TxSeq ≠ ExpectedTxSeq is received then an exception condition shall be triggered which is handled according to Section 8.4.7 on page 97.

8.4.3 I-frames pulled by the SDU reassembly function

When the L2CAP layer has removed one or more I-frames from the buffer, BufferSeq may be incremented in accordance with the amount of buffer space released. If BufferSeq is incremented, an acknowledgement shall be sent to the peer entity.

Note: Since the primary purpose of BufferSeq is to prevent buffer overflow, an implementation may choose to set BufferSeq in accordance with how many new incoming I-frames could be stored rather than how many have been removed.

The acknowledgement may either be an RR or an I-frame. The acknowledgement shall be sent to the peer L2CAP entity with ReqSeq equal to BufferSeq. When there are no I-frames buffered for pulling ExpectedTxSeq is equal to BufferSeq.

If the MonitorTimer is active then it shall be restarted to indicate that a signal has been sent to the peer L2CAP entity.

8.4.4 Sending and receiving acknowledgements

Either the MonitorTimer or the RetransmissionTimer shall be active while in Retransmission Mode. Both timers shall not be active concurrently.

8.4.4.1 Sending acknowledgements

Whenever an L2CAP entity transmits an I-frame or an S-frame, ReqSeq shall be set to ExpectedTxSeq or BufferSeq.

8.4.4.2 Receiving acknowledgements

On receipt of a valid S-frame or I-frame, the ReqSeq contained in the frame shall acknowledge previously transmitted I-frames. ReqSeq acknowledges I-frames with a TxSeq up to and including ReqSeq – 1.

The following rules shall be applied:

1. If the RetransmissionDisableBit changed value from 0 to 1 (stop retransmissions) then the receiving entity shall
   - a) If the RetransmissionTimer is running then stop it and start the MonitorTimer.
   - b) Store the state of the RetransmissionDisableBit received.
2. If the RetransmissionDisableBit changed value from 1 to 0 (start retransmissions) then the receiving entity shall
   - a) Store the state of the RetransmissionDisableBit received.
   - b) If there are any I-frames that have been sent but not acknowledged, then stop the MonitorTimer and start the RetransmissionTimer.
   - c) Any buffered I-frames shall be transmitted according to Section 8.4.1 on page 93.
3. If any unacknowledged I-frames were acknowledged by the ReqSeq contained in the frame, and the RetransmissionDisableBit equals 1 (retransmissions stopped), then the receiving entity shall
   - a) Follow the rules in Section 8.4.1 on page 93.
4. If any unacknowledged I-frames were acknowledged by the ReqSeq contained in the frame and the RetransmissionDisableBit equals 0 (retransmissions started) then the receiving entity shall
   - a) If the RetransmissionTimer is running, then stop it.
   - b) If any unacknowledged I-frames have been sent then the RetransmissionTimer shall be restarted.

c) Follow the rules in Section 8.4.1 on page 93.

d) If the RetransmissionTimer is not running and the MonitorTimer is not running, then start the MonitorTimer.

On receipt of a valid S-frame or I-frame the ReqSeq contained in the frame shall acknowledge previously transmitted I-frames. ExpectedAckSeq shall be set to ReqSeq to indicate that the I-frames with TxSeq up to and including (ReqSeq - 1) have been acknowledged.

8.4.5 Receiving REJ frames

Upon receipt of a valid REJ frame, where ReqSeq identifies an I-frame not yet acknowledged, the ReqSeq acknowledges I-frames with TxSeq up to and including ReqSeq - 1. Therefore the REJ acknowledges all I-frames before the I-frame it is rejecting.

ExpectedAckSeq shall be set equal to ReqSeq to mark I-frames up to and including ReqSeq - 1 as received.

NextTXSeq shall be set to ReqSeq to cause transmissions of I-frames to resume from the point where TxSeq equals ReqSeq.

If ReqSeq equals ExpectedAckSeq then the REJ frame shall be ignored.

8.4.6 Waiting acknowledgements

A counter, TransmitCounter, counts the number of times an L2CAP PDU has been transmitted. This shall be set to 1 after the first transmission. If the RetransmissionTimer expires the following actions shall be taken:

1. If the TransmitCounter is less than MaxTransmit then:

   a) Increment the TransmitCounter

   b) Retransmit the last unacknowledged I-frame, according to Section 8.4.1 on page 93.

2. If the TransmitCounter is equal to MaxTransmit this channel to the peer entity shall be assumed lost. The channel shall move to the CLOSED state and appropriate action shall be taken to report this to the upper layers.

8.4.7 Exception conditions

Exception conditions may occur as the result of physical layer errors or L2CAP procedural errors. The error recovery procedures which are available following the detection of an exception condition at the L2CAP layer in Retransmission Mode are defined in this section.

8.4.7.1 TxSeq Sequence error

A TxSeq sequence error exception condition occurs in the receiver when a valid I-frame is received which contains a TxSeq value which is not equal to the expected value, thus TxSeq is not equal to ExpectedTxSeq.

The TxSeq sequence error may be due to three different causes:

- *Duplicated I-frame*

  The duplicated I-frame is identified by a TxSeq in the range BufferSeq to ExpectedTxSeq – 1 (BufferSeq ≤TxSeq<ExpectedTxSeq). The ReqSeq and RetransmissionDisableBit shall be processed according to Section 8.4.4 on page 96. The Information field shall be discarded since it has already been received.

- *Out-of-sequence I-frame*

  The out-of-sequence I-frame is identified by a TxSeq within the legal range. The ReqSeq and RetransmissionDisableBit shall be processed according to Section 8.4.4 on page 96.

  A REJ exception is triggered, and an REJ frame with ReqSeq equal to ExpectedTxSeq shall be sent to initiate recovery. The received I-frame shall be discarded.

- *Invalid TxSeq*

  An invalid TxSeq value is a value that does not meet either of the above conditions. An I-frame with an invalid TxSeq is likely to have errors in the control field and shall be silently discarded.

8.4.7.2 ReqSeq Sequence error

An ReqSeq sequence error exception condition occurs in the transmitter when a valid S-frame or I-frame is received which contains an invalid ReqSeq value. An invalid ReqSeq is one that is not in the range ExpectedAckSeq ≤ ReqSeq ≤ NextTxSeq.

The L2CAP entity shall close the channel as a consequence of an ReqSeq Sequence error.

8.4.7.3 Timer recovery error

If an L2CAP entity fails to receive an acknowledgement for the last I-frame sent, then it will not detect an out-of-sequence exception condition and therefore will not transmit an REJ frame.

The L2CAP entity that transmitted an unacknowledged I-frame shall, on the expiry of the RetransmissionTimer, take appropriate recovery action as defined in Section 8.4.6 on page 97.

8.4.7.4 Invalid frame

Any frame received which is invalid (as defined in Section 3.3.6 on page 40) shall be discarded, and no action shall be taken as a result of that frame.

8.5 FLOW CONTROL MODE

When a link is configured to work in flow control mode, the flow control operation is similar to the procedures in retransmission mode, but all operations dealing with CRC errors in received packets are not used. Therefore

- REJ frames shall not be used in Flow Control Mode.
- The RetransmissionDisableBit shall always be set to zero in the transmitter, and shall be ignored in the receiver.

The behaviour of flow control mode is specified in this section.

Assuming that the TxWindow size is equal to the buffer space available in the receiver (counted in number of I-frames), in flow control mode the number of unacknowledged frames in the transmitter window is always less than or equal to the number of frames for which space is available in the receiver. Note that a missing frame still occupies a place in the window.

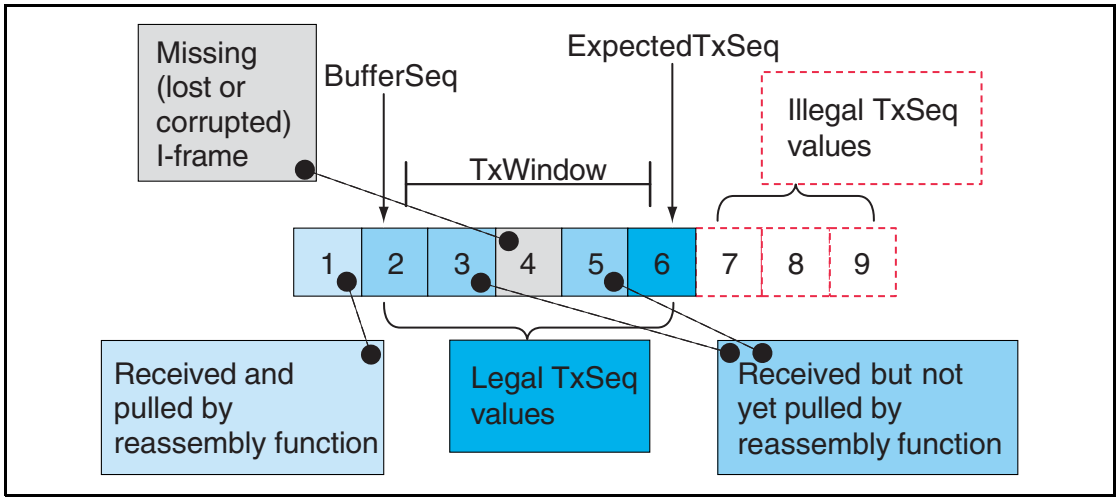

Figure 8.3: Overview of the receiver side when operating in flow control mode

8.5.1 Transmitting I-frames

A new I-frame shall only be transmitted when the TxWindow is not full.

Upon transmission of the I-frame the following actions shall be performed:

- If no unacknowledged I-frames have been sent then the MonitorTimer shall be stopped and the RetransmissionTimer shall be started.
- If any I-frames have been sent and not acknowledged then the RetransmissionTimer remains active and no timer operation is performed.

The control field parameter ReqSeq shall be set to ExpectedTxSeq, TxSeq shall be set to NextTXSeq and NextTXSeq shall be incremented by one.

8.5.2 Receiving I-frames

Upon receipt of a valid I-frame with TxSeq equal to ExpectedTxSeq, the frame shall be made available to the reassembly function. ExpectedTxSeq shall be incremented by one. An acknowledgement shall not be sent until the SDU reassembly function has pulled the I-frame.

Upon receipt of a valid I-frame with an out-of-sequence TxSeq (see Section 8.5.6 on page 101) all frames with a sequence number less than TxSeq shall be assumed lost and marked as missing. The missing I-frames are in the range from ExpectedTxSeq (the frame that the device was expecting to receive) up to TxSeq-1, (the frame that the device actually received). ExpectedTxSeq shall be set to TxSeq +1. The received I-frame shall be made available for pulling by the reassembly function. The acknowledgement shall not occur until the SDU reassembly function has pulled the I-frame. The ReqSeq shall be processed according to Section 8.5.4 on page 100.

8.5.3 I-frames pulled by the SDU reassembly function

When the L2CAP layer has removed one or more I-frames from the buffer, BufferSeq may be incremented in accordance with the amount of buffer space released. If BufferSeq is incremented, an acknowledgement shall be sent to the peer entity. If the MonitorTimer is active then it shall be restarted to indicate that a signal has been sent to the peer L2CAP entity.

Note: Since the primary purpose of BufferSeq is to prevent buffer overflow, an implementation may choose to set BufferSeq in accordance with how many new incoming I-frames could be stored rather than how many have been removed.

The acknowledgement may be an RR or an I-frame. The acknowledgement shall be sent to the peer L2CAP entity with ReqSeq equal to BufferSeq. When there is no I-frame buffered for pulling, ExpectedTxSeq is equal to BufferSeq.

8.5.4 Sending and receiving acknowledgements

One of the timers MonitorTimer or RetransmissionTimer shall always be active while in Flow Control mode. Both timers shall never be active concurrently.

8.5.4.1 Sending acknowledgements

Whenever a data link layer entity transmits an I-frame or a S-frame, ReqSeq shall be set to ExpectedTxSeq or BufferSeq.

8.5.4.2 Receiving acknowledgements

On receipt of a valid S-frame or I-frame the ReqSeq contained in the frame shall be used to acknowledge previously transmitted I-frames. ReqSeq acknowledges I-frames with a TxSeq up to and including ReqSeq – 1.

1. If any outstanding I-frames were acknowledged then
   a) Stop the RetransmissionTimer
   b) If there are still unacknowledged I-frames then restart the RetransmissionTimer, otherwise start the MonitorTimer.
   c) Transmit any I-frames awaiting transmission according to Section 8.5.1 on page 99.

ExpectedAckSeq shall be set to ReqSeq to indicate that the I-frames with TxSeq up to and including ExpectedAckSeq have been acknowledged.

8.5.5 Waiting acknowledgements

If the RetransmissionTimer expires the following actions shall be taken:
The I-frame supervised by the RetransmissionTimer shall be considered lost, and ExpectedAckSeq shall be incremented by one.

1. If I-frames are waiting to be sent
   a) The RetransmissionTimer is restarted
   b) I-frames awaiting transmission are transmitted according to Section 8.5.1 on page 99.
2. If there are no I-frames waiting to be sent
   a) If there are still unacknowledged I-frames the RetransmissionTimer is restarted, otherwise the MonitorTimer is started.

8.5.6 Exception conditions

Exception conditions may occur as the result of physical layer errors or L2CAP procedural errors. The error recovery procedures which are available following the detection of an exception condition at the L2CAP layer in flowcontrol only mode are defined in this section.

8.5.6.1 TxSeq Sequence error

A TxSeq sequence error exception condition occurs in the receiver when a valid I-frame is received which contains a TxSeq value which is not equal to the expected value, thus TxSeq is not equal to ExpectedTxSeq.

The TxSeq sequence error may be due to three different causes:

- *Duplicated I-frame*

  The duplicated I-frame is identified by a TxSeq in the range BufferSeq to ExpectedTxSeq – 1. The ReqSeq shall be processed according to Section 8.5.4 on page 100. The Information field shall be discarded since it has already been received.

- *Out-of-sequence I-frame*

  The out-of-sequence I-frame is identified by a TxSeq within the legal range ExpectedTxSeq < TxSeq < (BufferSeq + TxWindow). The ReqSeq shall be processed according to Section 8.5.4 on page 100.

  The missing I-frame(s) are considered lost and ExpectedTXSeq is set equal to TxSeq+1 as specified in Section 8.5.2 on page 100. The missing I-frame(s) are reported as lost to the SDU reassembly function.

- *Invalid TxSeq*

  An invalid TxSeq value is a value that does not meet either of the above conditions and TxSeq is not equal to ExpectedTxSeq. An I-frame with an invalid TxSeq is likely to have errors in the control field and shall be silently discarded.

8.5.6.2 ReqSeq Sequence error

An ReqSeq sequence error exception condition occurs in the transmitter when a valid S-frame or I-frame is received which contains an invalid ReqSeq value. An invalid ReqSeq is one that is not in the range ExpectedAckSeq ≤ ReqSeq ≤ NextTXSeq.

The L2CAP entity shall close the channel as a consequence of an ReqSeq Sequence error.

8.5.6.3 Timer recovery error

An L2CAP entity that fails to receive an acknowledgement for an I-frame shall, on the expiry of the RetransmissionTimer, take appropriate recovery action as defined in Section 8.5.5 on page 101.

8.5.6.4 Invalid frame

Any frame received that is invalid (as defined in Section 3.3.6 on page 40) shall be discarded, and no action shall be taken as a result of that frame, unless the receiving L2CAP entity is configured to deliver erroneous frames to the layer above L2CAP. In that case, the data contained in invalid frames may also be added to the receive buffer and made available for pulling from the SDU reassembly function.

9 LIST OF FIGURES

Figure 1.1: L2CAP within protocol layers 21
Figure 1.2: L2CAP data flows in Bluetooth Protocol Architecture 22
Figure 1.3: L2CAP architectural blocks 22

Figure 2.1: Channels between devices 30
Figure 2.2: L2CAP transaction model. 31

Figure 3.1: PDU format in Basic L2CAP mode on connection-oriented channels (field sizes in bits) 33
Figure 3.2: L2CAP PDU format in Basic L2CAP mode on Connectionless channel 34
Figure 3.3: L2CAP PDU formats in Flow Control and Retransmission Modes 35
Figure 3.4: The LFSR circuit generating the FCS. 39
Figure 3.5: Initial state of the FCS generating circuit..... 39

Figure 4.1: L2CAP PDU format on the signalling channel 41
Figure 4.2: Command format 41
Figure 4.3: Command Reject packet 43
Figure 4.4: Connection Request Packet 44
Figure 4.5: Connection Response Packet 46
Figure 4.6: Configuration Request Packet 48
Figure 4.7: Configuration Request Flags field format 48
Figure 4.8: Configuration Response Packet 50
Figure 4.9: Configuration Response Flags field format 50
Figure 4.10: Disconnection Request Packet 52
Figure 4.11: Disconnection Response Packet 53
Figure 4.12: Echo Request Packet 53
Figure 4.13: Echo Response Packet 54
Figure 4.14: Information Request Packet 54
Figure 4.15: Information Response Packet 55

Figure 5.1: Configuration option format 57
Figure 5.2: MTU Option Format 58
Figure 5.3: Flush Timeout option format. 59
Figure 5.4: Quality of Service (QoS) option format containing Flow Specification. 61
Figure 5.5: Retransmission and Flow Control option format. 64

Figure 6.1: States and transitions. 76
Figure 6.2: Configuration states and transitions. 77

Figure 7.1: L2CAP fragmentation. 81
Figure 7.2: Example of fragmentation processes in a device with HCI. 82
Figure 7.3: Segmentation and fragmentation of an SDU. 83
Figure 7.4: Example of segmentation and fragment processes in a device with HCI 84

Figure 8.1: Example of the transmitter side 90
Figure 8.2: Example of the receiver side 92
Figure 8.3: Overview of the receiver side when operating in flow control mode 99

10 LIST OF TABLES

Table 1.1: Terminology....26

Table 2.1: CID name space....29
Table 2.2: Types of Channel Identifiers....30

Table 3.1: Control Field formats....36
Table 3.2: SAR control element format....37
Table 3.3: S control element format: type of S-frame....37

Table 4.1: Signalling Command Codes....42
Table 4.2: Reason Code Descriptions....43
Table 4.3: Reason Data values....44
Table 4.4: Defined PSM Values....45
Table 4.5: Result values....46
Table 4.6: Status values....47
Table 4.7: Configuration Response Result codes....51
Table 4.8: InfoType definitions....54
Table 4.9: Information Response Result values....55
Table 4.10: Information Response Data fields....56
Table 4.11: Extended feature mask....56

Table 5.1: Service type definitions....61
Table 5.2: Mode definitions....64

Table 6.1: CLOSED state event table....68
Table 6.2: WAIT_CONNECT_RSP state event table....69
Table 6.3: WAIT_CONNECT state event table....69
Table 6.4: CONFIG state/substates event table: success transitions within configuration process....70
Table 6.5: CONFIG state/substates event table: non-success transitions within configuration process....71
Table 6.6: CONFIG state/substates event table: events not related to configuration process....72
Table 6.7: OPEN state event table....73
Table 6.8: WAIT_DISCONNECT state event table....73

Table 7.1: Parameters allowed in Request....80
Table 7.2: Parameters allowed in Response....80

Table 8.1: Summary of actions when the RetransmissionTimer is in use and R=0....94

APPENDIX A: CONFIGURATION MSCs

The examples in this appendix describe a sample of the multiple possible configuration scenarios that might occur.

Figure I illustrates the basic configuration process. In this example, the devices exchange MTU information. All other values are assumed to be default.

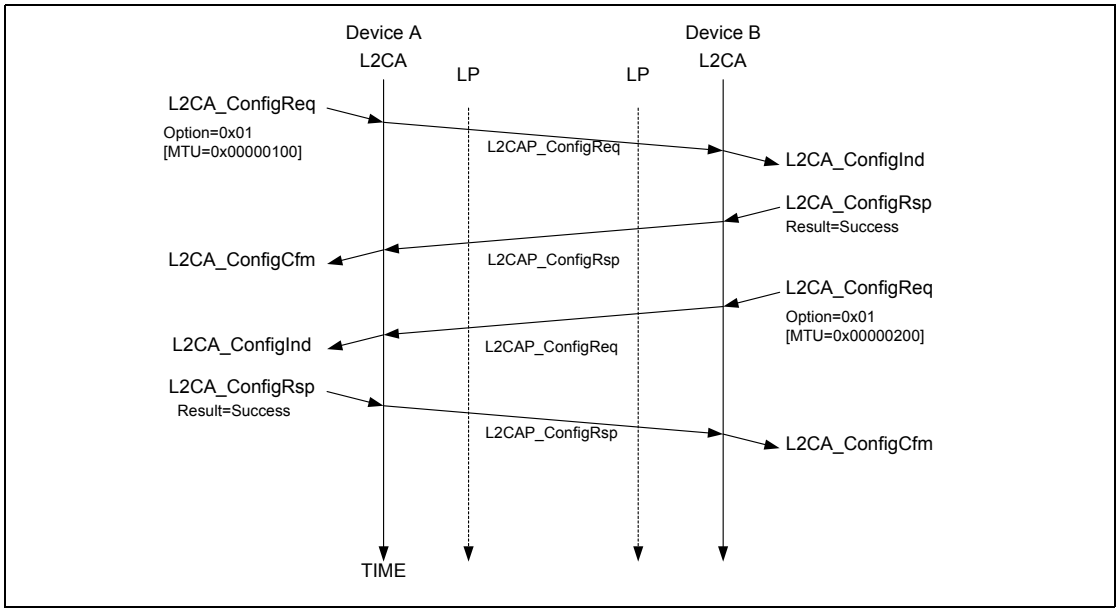

Figure I: Basic MTU exchange

Figure II on page 108 illustrates how two devices interoperate even though one device supports more options than the other does. Device A is an upgraded version. It uses a hypothetically defined option type 0x20 for link-level security. Device B rejects the command using the Configuration Response packet with result 'unknown parameter' informing Device A that option 0x20 is not understood. Device A then resends the request omitting option 0x20. Device B notices that it does not need to such a large MTU and accepts the request but includes in the response the MTU option informing Device A that Device B will not send an L2CAP packet with a payload larger than 0x80 octets over this channel. On receipt of the response, Device A could reduce the buffer allocated to hold incoming traffic.

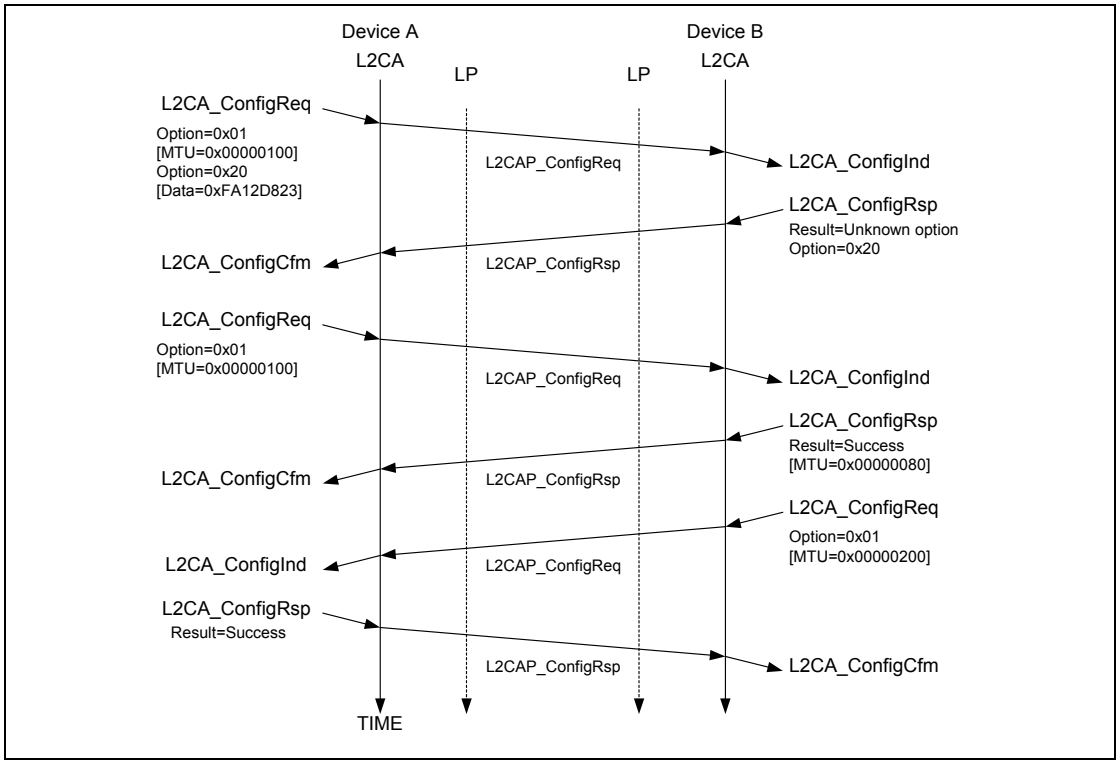

Figure II: Dealing with Unknown Options

Figure III on page 109 illustrates an unsuccessful configuration request. There are two problems described by this example. The first problem is that the configuration request is placed in an L2CAP packet that cannot be accepted by the remote device, due to its size. The remote device informs the sender of this problem using the Command Reject message. Device A then resends the configuration options using two smaller L2CAP_ConfigReq messages.

The second problem is an attempt to configure a channel with an invalid CID. For example device B may not have an open connection on that CID (0x01234567 in this example case).

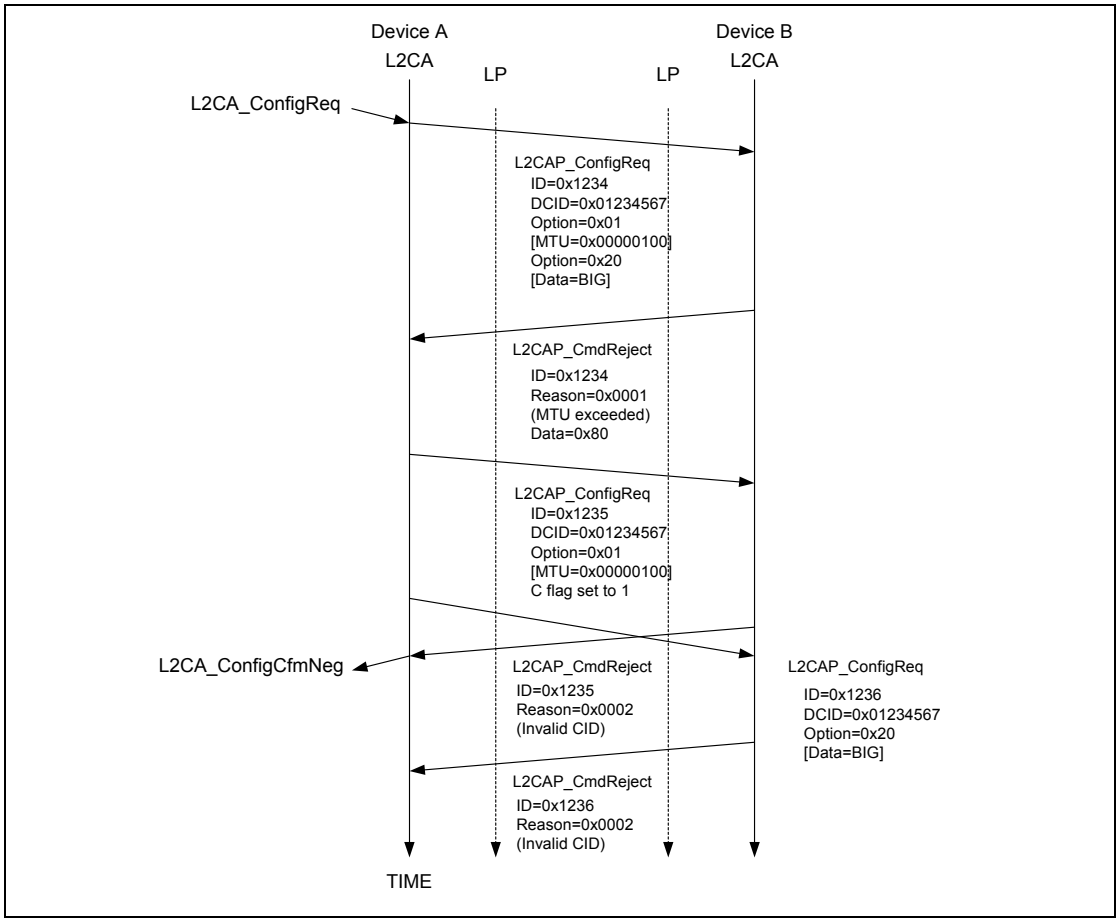

Figure III: Unsuccessful Configuration Request

Core System Package [Host volume]
Part B

SERVICE DISCOVERY PROTOCOL (SDP)

This specification defines a protocol for locating services provided by or available through a Bluetooth device.

CONTENTS

1 Introduction 115
1.1 General Description 115
1.2 Motivation 115
1.3 Requirements 115
1.4 Non-requirements and Deferred Requirements 116
1.5 Conventions 116
1.5.1 Bit And Byte Ordering Conventions 116
2 Overview 117
2.1 SDP Client-Server Interaction 117
2.2 Service Record 118
2.3 Service Attribute 120
2.4 Attribute ID 120
2.5 Attribute Value 121
2.6 Service Class 121
2.6.1 A Printer Service Class Example 122
2.7 Searching for Services 123
2.7.1 UUID 123
2.7.2 Service Search Patterns 124
2.8 Browsing for Services 124
2.8.1 Example Service Browsing Hierarchy 125
3 Data Representation 127
3.1 Data Element 127
3.2 Data Element Type Descriptor 127
3.3 Data Element Size Descriptor 128
3.4 Data Element Examples 129
4 Protocol Description 131
4.1 Transfer Byte Order 131
4.2 Protocol Data Unit Format 131
4.3 Partial Responses and Continuation State 133
4.4 Error Handling 133
4.4.1 SDP_ErrorResponse PDU 134
4.5 ServiceSearch Transaction 135
4.5.1 SDP_ServiceSearchRequest PDU 135
4.5.2 SDP_ServiceSearchResponse PDU 136
4.6 ServiceAttribute Transaction 138
4.6.1 SDP_ServiceAttributeRequest PDU 138
4.6.2 SDP_ServiceAttributeResponse PDU 140
4.7 ServiceSearchAttribute Transaction 141

4.7.1 SDP_ServiceSearchAttributeRequest PDU 141
4.7.2 SDP_ServiceSearchAttributeResponse PDU 143

5 Service Attribute Definitions 145

5.1 Universal Attribute Definitions 145
5.1.1 ServiceRecordHandle Attribute 145
5.1.2 ServiceClassIDList Attribute 146
5.1.3 ServiceRecordState Attribute 146
5.1.4 ServiceID Attribute 146
5.1.5 ProtocolDescriptorList Attribute 147
5.1.6 BrowseGroupList Attribute 148
5.1.7 LanguageBaseAttributeIDList Attribute 148
5.1.8 ServiceInfoTimeToLive Attribute 149
5.1.9 ServiceAvailability Attribute 150
5.1.10 BluetoothProfileDescriptorList Attribute 150
5.1.11 DocumentationURL Attribute 151
5.1.12 ClientExecutableURL Attribute 151
5.1.13 IconURL Attribute 152
5.1.14 ServiceName Attribute 152
5.1.15 ServiceDescription Attribute 153
5.1.16 ProviderName Attribute 153
5.1.17 Reserved Universal Attribute IDs 153
5.2 ServiceDiscoveryServer Service Class Attribute Definitions ... 154
5.2.1 ServiceRecordHandle Attribute 154
5.2.2 ServiceClassIDList Attribute 154
5.2.3 VersionNumberList Attribute 154
5.2.4 ServiceDatabaseState Attribute 155
5.2.5 Reserved Attribute IDs 155
5.3 BrowseGroupDescriptor Service Class Attribute Definitions ... 155
5.3.1 ServiceClassIDList Attribute 155
5.3.2 GroupID Attribute 156
5.3.3 Reserved Attribute IDs 156

Appendix A
Background Information 157

Appendix B
Example SDP Transactions 158

1 INTRODUCTION

1.1 GENERAL DESCRIPTION

The service discovery protocol (SDP) provides a means for applications to discover which services are available and to determine the characteristics of those available services.

1.2 MOTIVATION

Service Discovery in the Bluetooth environment, where the set of services that are available changes dynamically based on the RF proximity of devices in motion, is qualitatively different from service discovery in traditional network-based environments. The service discovery protocol defined in this specification is intended to address the unique characteristics of the Bluetooth environment. See Section , “Appendix A – Background Information,” on page 157, for further information on this topic.

1.3 REQUIREMENTS

The following capabilities have been identified as requirements for version 1.0 of the Service Discovery Protocol.

1. SDP shall provide the ability for clients to search for needed services based on specific attributes of those services.
2. SDP shall permit services to be discovered based on the class of service.
3. SDP shall enable browsing of services without a priori knowledge of the specific characteristics of those services.
4. SDP shall provide the means for the discovery of new services that become available when devices enter RF proximity with a client device as well as when a new service is made available on a device that is in RF proximity with the client device.
5. SDP shall provide a mechanism for determining when a service becomes unavailable when devices leave RF proximity with a client device as well as when a service is made unavailable on a device that is in RF proximity with the client device.
6. SDP shall provide for services, classes of services, and attributes of services to be uniquely identified.
7. SDP shall allow a client on one device to discover a service on another device without consulting a third device.
8. SDP should be suitable for use on devices of limited complexity.
9. SDP shall provide a mechanism to incrementally discover information about the services provided by a device. This is intended to minimize the quantity

of data that must be exchanged in order to determine that a particular service is not needed by a client.

10. SDP should support the caching of service discovery information by intermediary agents to improve the speed or efficiency of the discovery process.
11. SDP should be transport independent.
12. SDP shall function while using L2CAP as its transport protocol.
13. SDP shall permit the discovery and use of services that provide access to other service discovery protocols.
14. SDP shall support the creation and definition of new services without requiring registration with a central authority.

1.4 NON-REQUIREMENTS AND DEFERRED REQUIREMENTS

The Bluetooth SIG recognizes that the following capabilities are related to service discovery. These items are not addressed in SDP version 1.0. However, some may be addressed in future revisions of the specification.

1. SDP 1.0 does not provide access to services. It only provides access to information about services.
2. SDP 1.0 does not provide brokering of services.
3. SDP 1.0 does not provide for negotiation of service parameters.
4. SDP 1.0 does not provide for billing of service use.
5. SDP 1.0 does not provide the means for a client to control or change the operation of a service.
6. SDP 1.0 does not provide an event notification when services, or information about services, become unavailable.
7. SDP 1.0 does not provide an event notification when attributes of services are modified.
8. This specification does not define an application programming interface for SDP.
9. SDP 1.0 does not provide support for service agent functions such as service aggregation or service registration.

1.5 CONVENTIONS

1.5.1 Bit And Byte Ordering Conventions

When multiple bit fields are contained in a single byte and represented in a drawing in this specification, the more significant (high-order) bits are shown toward the left and less significant (low-order) bits toward the right.

Multiple-byte fields are drawn with the more significant bytes toward the left and the less significant bytes toward the right. Multiple-byte fields are transferred in network byte order. See section 4.1 on page 131.

2 OVERVIEW

2.1 SDP CLIENT-SERVER INTERACTION

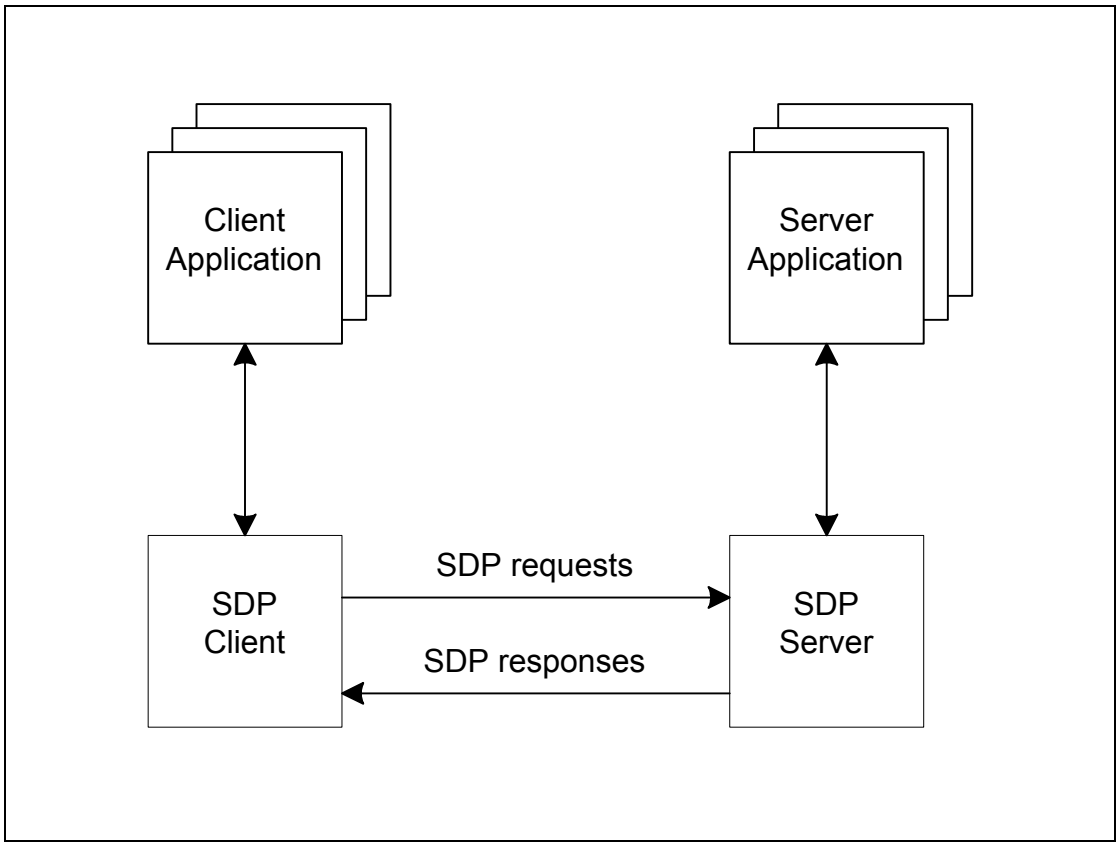

Figure 2.1:

The service discovery mechanism provides the means for client applications to discover the existence of services provided by server applications as well as the attributes of those services. The attributes of a service include the type or class of service offered and the mechanism or protocol information needed to utilize the service.

As far as the Service Discovery Protocol (SDP) is concerned, the configuration shown in Figure 1 may be simplified to that shown in Figure 2.

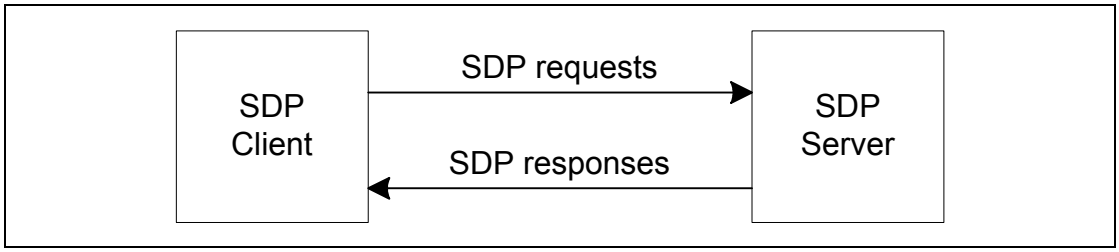

Figure 2.2:

SDP involves communication between an SDP server and an SDP client. The server maintains a list of service records that describe the characteristics of services associated with the server. Each service record contains information about a single service. A client may retrieve information from a service record maintained by the SDP server by issuing an SDP request.

If the client, or an application associated with the client, decides to use a service, it must open a separate connection to the service provider in order to utilize the service. SDP provides a mechanism for discovering services and their attributes (including associated service access protocols), but it does not provide a mechanism for utilizing those services (such as delivering the service access protocols).

There is a maximum of one SDP server per Bluetooth device. (If a Bluetooth device acts only as a client, it needs no SDP server.) A single Bluetooth device may function both as an SDP server and as an SDP client. If multiple applications on a device provide services, an SDP server may act on behalf of those service providers to handle requests for information about the services that they provide.

Similarly, multiple client applications may utilize an SDP client to query servers on behalf of the client applications.

The set of SDP servers that are available to an SDP client can change dynamically based on the RF proximity of the servers to the client. When a server becomes available, a potential client must be notified by a means other than SDP so that the client can use SDP to query the server about its services. Similarly, when a server leaves proximity or becomes unavailable for any reason, there is no explicit notification via the service discovery protocol. However, the client may use SDP to poll the server and may infer that the server is not available if it no longer responds to requests.

Additional information regarding application interaction with SDP is contained in the Bluetooth Service Discovery Profile document.

2.2 SERVICE RECORD

A service is any entity that can provide information, perform an action, or control a resource on behalf of another entity. A service may be implemented as software, hardware, or a combination of hardware and software.

All of the information about a service that is maintained by an SDP server is contained within a single service record. The service record consists entirely of a list of service attributes.

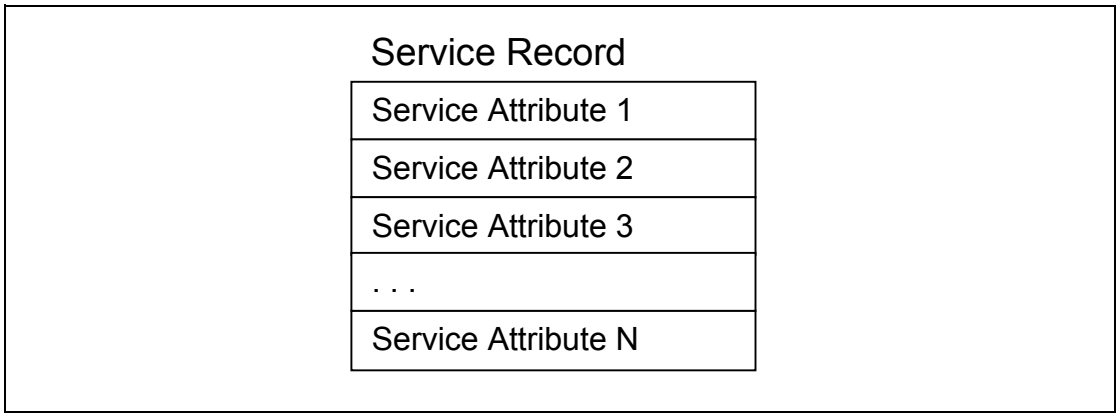

Figure 2.3: Service Record

A service record handle is a 32-bit number that uniquely identifies each service record within an SDP server. It is important to note that, in general, each handle is unique only within each SDP server. If SDP server S1 and SDP server S2 both contain identical service records (representing the same service), the service record handles used to reference these identical service records are completely independent. The handle used to reference the service on S1 will be meaningless if presented to S2.

The service discovery protocol does not provide a mechanism for notifying clients when service records are added to or removed from an SDP server. While an L2CAP (Logical Link Control and Adaptation Protocol) connection is established to a server, a service record handle acquired from the server will remain valid unless the service record it represents is removed. If a service is removed from the server, further requests to the server (during the L2CAP connection in which the service record handle was acquired) using the service's (now stale) record handle will result in an error response indicating an invalid service record handle. An SDP server must ensure that no service record handle values are re-used while an L2CAP connection remains established. Note that service record handles are known to remain valid across successive L2CAP connections while the ServiceDatabaseState attribute value remains unchanged. See the ServiceRecordState and ServiceDatabaseState attributes in section 5 on page 145.

There is one service record handle whose meaning is consistent across all SDP servers. This service record handle has the value 0x00000000 and is a handle to the service record that represents the SDP server itself. This service record contains attributes for the SDP server and the protocol it supports. For example, one of its attributes is the list of SDP protocol versions supported by the server. Service record handle values 0x00000001-0x0000FFFF are reserved.

2.3 SERVICE ATTRIBUTE

Each service attribute describes a single characteristic of a service. Some examples of service attributes are:

ServiceClassIDList	Identifies the type of service represented by a service record. In other words, the list of classes of which the service is an instance
ServiceID	Uniquely identifies a specific instance of a service
ProtocolDescriptorList	Specifies the protocol stack(s) that may be used to utilize a service
ProviderName	The textual name of the individual or organization that provides a service
IconURL	Specifies a URL that refers to an icon image that may be used to represent a service
ServiceName	A text string containing a human-readable name for the service
ServiceDescription	A text string describing the service

See section 5.1 on page 145, for attribute definitions that are common to all service records. Service providers can also define their own service attributes.

A service attribute consists of two components: an attribute ID and an attribute value.

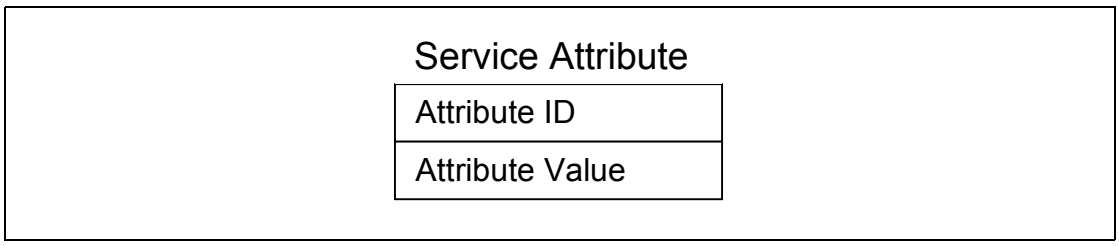

Figure 2.4: Service Attribute

2.4 ATTRIBUTE ID

An attribute ID is a 16-bit unsigned integer that distinguishes each service attribute from other service attributes within a service record. The attribute ID also identifies the semantics of the associated attribute value.

A service class definition specifies each of the attribute IDs for a service class and assigns a meaning to the attribute value associated with each attribute ID.

For example, assume that service class C specifies that the attribute value associated with attribute ID 12345 is a text string containing the date the service was created. Assume further that service A is an instance of service class C. If service A's service record contains a service attribute with an attribute ID

of 12345, the attribute value must be a text string containing the date that service A was created. However, services that are not instances of service class C may assign a different meaning to attribute ID 12345.

All services belonging to a given service class assign the same meaning to each particular attribute ID. See section 2.6 on page 121.

In the Service Discovery Protocol, an attribute ID is often represented as a data element. See section 3 on page 127.

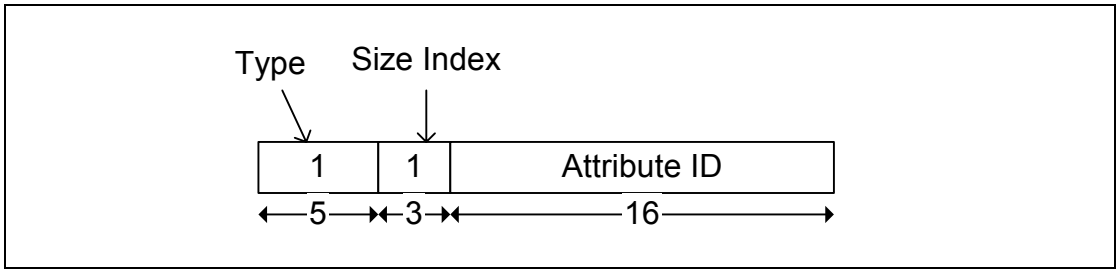

Figure 2.5:

2.5 ATTRIBUTE VALUE

The attribute value is a variable length field whose meaning is determined by the attribute ID associated with it and by the service class of the service record in which the attribute is contained. In the Service Discovery Protocol, an attribute value is represented as a data element. (See section 3 on page 127.) Generally, any type of data element is permitted as an attribute value, subject to the constraints specified in the service class definition that assigns an attribute ID to the attribute and assigns a meaning to the attribute value. See section 5 on page 145, for attribute value examples.

2.6 SERVICE CLASS

Each service is an instance of a service class. The service class definition provides the definitions of all attributes contained in service records that represent instances of that class. Each attribute definition specifies the numeric value of the attribute ID, the intended use of the attribute value, and the format of the attribute value. A service record contains attributes that are specific to a service class as well as universal attributes that are common to all services.

Each service class is also assigned a unique identifier. This service class identifier is contained in the attribute value for the ServiceClassIDList attribute, and is represented as a UUID (see section 2.7.1 on page 123). Since the format and meanings of many attributes in a service record are dependent on the service class of the service record, the ServiceClassIDList attribute is very important. Its value should be examined or verified before any class-specific attributes are used. Since all of the attributes in a service record must conform to all of the service's classes, the service class identifiers contained in the ServiceClassIDList attribute are related. Typically, each service class is a subclass

of another class whose identifier is contained in the list. A service subclass definition differs from its superclass in that the subclass contains additional attribute definitions that are specific to the subclass. The service class identifiers in the ServiceClassIDList attribute are listed in order from the most specific class to the most general class.

When a new service class is defined that is a subclass of an existing service class, the new service class retains all of the attributes defined in its superclass. Additional attributes will be defined that are specific to the new service class. In other words, the mechanism for adding new attributes to some of the instances of an existing service class is to create a new service class that is a subclass of the existing service class.

2.6.1 A Printer Service Class Example

A color postscript printer with duplex capability might conform to 4 ServiceClass definitions and have a ServiceClassIDList with UUIDs (See section 2.7.1 on page 123.) representing the following ServiceClasses:

DuplexColorPostscriptPrinterServiceClassID,
ColorPostscriptPrinterServiceClassID,
PostscriptPrinterServiceClassID,
PrinterServiceClassID

Note that this example is only illustrative. This may not be a practical printer class hierarchy.

2.7 SEARCHING FOR SERVICES

Once an SDP client has a service record handle, it may easily request the values of specific attributes, but how does a client initially acquire a service record handle for the desired service records? The Service Search transaction allows a client to retrieve the service record handles for particular service records based on the values of attributes contained within those service records.

The capability search for service records based on the values of arbitrary attributes is not provided. Rather, the capability is provided to search only for attributes whose values are Universally Unique Identifiers[1] (UUIDs). Important attributes of services that can be used to search for a service are represented as UUIDs.

2.7.1 UUID

A UUID is a universally unique identifier that is guaranteed to be unique across all space and all time. UUIDs can be independently created in a distributed fashion. No central registry of assigned UUIDs is required. A UUID is a 128-bit value.

To reduce the burden of storing and transferring 128-bit UUID values, a range of UUID values has been pre-allocated for assignment to often-used, registered purposes. The first UUID in this pre-allocated range is known as the Bluetooth Base UUID and has the value 00000000-0000-1000-8000-00805F9B34FB, from the Bluetooth Assigned Numbers document. UUID values in the pre-allocated range have aliases that are represented as 16-bit or 32-bit values. These aliases are often called 16-bit and 32-bit UUIDs, but it is important to note that each actually represents a 128-bit UUID value.

The full 128-bit value of a 16-bit or 32-bit UUID may be computed by a simple arithmetic operation.

$$128_bit_value = 16_bit_value * 2^{96} + Bluetooth_Base_UUID$$

$$128_bit_value = 32_bit_value * 2^{96} + Bluetooth_Base_UUID$$

A 16-bit UUID may be converted to 32-bit UUID format by zero-extending the 16-bit value to 32-bits. An equivalent method is to add the 16-bit UUID value to a zero-valued 32-bit UUID.

Note that two 16-bit UUIDs may be compared directly, as may two 32-bit UUIDs or two 128-bit UUIDs. If two UUIDs of differing sizes are to be com-

1. The format of UUIDs is defined by the International Organization for Standardization in ISO/IEC 11578:1996. “Information technology – Open Systems Interconnection – Remote Procedure Call (RPC)”

pared, the shorter UUID must be converted to the longer UUID format before comparison.

2.7.2 Service Search Patterns

A service search pattern is a list of UUIDs used to locate matching service records. A service search pattern is said to match a service record if each and every UUID in the service search pattern is contained within any of the service record's attribute values. The UUIDs need not be contained within any specific attributes or in any particular order within the service record. The service search pattern matches if the UUIDs it contains constitute a subset of the UUIDs in the service record's attribute values. The only time a service search pattern does not match a service record is if the service search pattern contains at least one UUID that is not contained within the service record's attribute values. Note also that a valid service search pattern must contain at least one UUID.

2.8 BROWSING FOR SERVICES

Normally, a client searches for services based on some desired characteristic(s) (represented by a UUID) of the services. However, there are times when it is desirable to discover which types of services are described by an SDP server's service records without any a priori information about the services. This process of looking for any offered services is termed browsing. In SDP, the mechanism for browsing for services is based on an attribute shared by all service classes. This attribute is called the BrowseGroupList attribute. The value of this attribute contains a list of UUIDs. Each UUID represents a browse group with which a service may be associated for the purpose of browsing.

When a client desires to browse an SDP server's services, it creates a service search pattern containing the UUID that represents the root browse group. All services that may be browsed at the top level are made members of the root browse group by having the root browse group's UUID as a value within the BrowseGroupList attribute.

Normally, if an SDP server has relatively few services, all of its services will be placed in the root browse group. However, the services offered by an SDP server may be organized in a browse group hierarchy, by defining additional browse groups below the root browse group. Each of these additional browse groups is described by a service record with a service class of BrowseGroupDescriptor.

A browse group descriptor service record defines a new browse group by means of its Group ID attribute. In order for a service contained in one of these newly defined browse groups to be browseable, the browse group descriptor service record that defines the new browse group must in turn be browseable. The hierarchy of browseable services that is provided by the use of browse group descriptor service records allows the services contained in an SDP

server to be incrementally browsed and is particularly useful when the SDP server contains many service records.

2.8.1 Example Service Browsing Hierarchy

Here is a fictitious service browsing hierarchy that may illuminate the manner in which browse group descriptors are used. Browse group descriptor service records are identified with (G); other service records with (S).

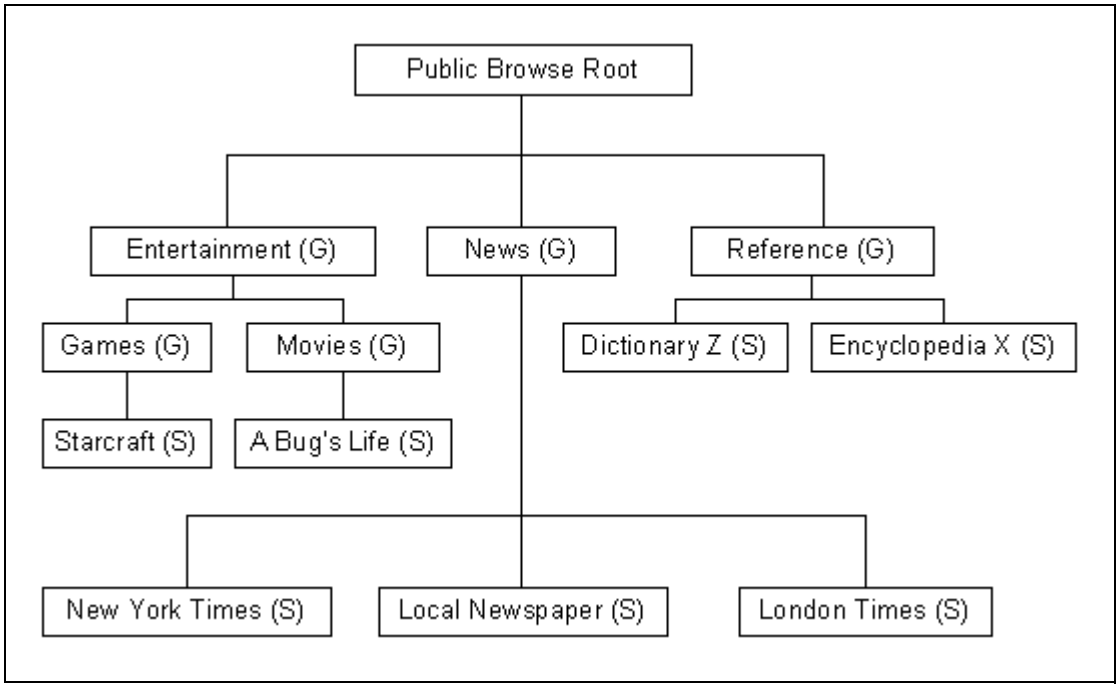

Figure 2.6:

This table shows the services records and service attributes necessary to implement the browse hierarchy.

Service Name	Service Class	Attribute Name	Attribute Value
Entertainment	BrowseGroupDescriptor	BrowseGroupList	PublicBrowseRoot
		GroupID	EntertainmentID
News	BrowsegroupDescriptor	BrowseGroupList	PublicBrowseRoot
		GroupID	NewsID
Reference	BrowseGroupDescriptor	BrowseGroupList	PublicBrowseRoot
		GroupID	ReferenceID
Games	BrowseGroupDescriptor	BrowseGroupList	EntertainmentID
		GroupID	GamesID
Movies	BrowseGroupDescriptor	BrowseGroupList	EntertainmentID
		GroupID	MoviesID
Starcraft	Video Game Class ID	BrowseGroupList	GamesID
A Bug's Life	Movie Class ID	BrowseGroupList	MovieID
Dictionary Z	Dictionary Class ID	BrowseGroupList	ReferenceID
Encyclopedia X	Encyclopedia Class ID	BrowseGroupList	ReferenceID
New York Times	Newspaper ID	BrowseGroupList	NewspaperID
London Times	Newspaper ID	BrowseGroupList	NewspaperID
Local Newspaper	Newspaper ID	BrowseGroupList	NewspaperID

Table 2.1:

3 DATA REPRESENTATION

Attribute values can contain information of various types with arbitrary complexity; thus enabling an attribute list to be generally useful across a wide variety of service classes and environments.

SDP defines a simple mechanism to describe the data contained within an attribute value. The primitive construct used is the data element.

3.1 DATA ELEMENT

A data element is a typed data representation. It consists of two fields: a header field and a data field. The header field, in turn, is composed of two parts: a type descriptor and a size descriptor. The data is a sequence of bytes whose length is specified in the size descriptor (described in section 3.3 on page 128) and whose meaning is (partially) specified by the type descriptor.

3.2 DATA ELEMENT TYPE DESCRIPTOR

A data element type is represented as a 5-bit type descriptor. The type descriptor is contained in the most significant (high-order) 5 bits of the first byte of the data element header. The following types have been defined.

Type Descriptor Value	Valid Size Descriptor Values	Type Description
0	0	Nil, the null type
1	0, 1, 2, 3, 4	Unsigned Integer
2	0, 1, 2, 3, 4	Signed twos-complement integer
3	1, 2, 4	UUID, a universally unique identifier
4	5, 6, 7	Text string
5	0	Boolean[1]
6	5, 6, 7	Data element sequence, a data element whose data field is a sequence of data elements
7	5, 6, 7	Data element alternative, data element whose data field is a sequence of data elements from which one data element is to be selected.
8	5, 6, 7	URL, a uniform resource locator
9-31		Reserved

Table 3.1: Data Element Type.

1. False is represented by the value 0, and true is represented by the value 1. However, to maximise interoperability, any non-zero value received must be accepted as representing true.

3.3 DATA ELEMENT SIZE DESCRIPTOR

The data element size descriptor is represented as a 3-bit size index followed by 0, 8, 16, or 32 bits. The size index is contained in the least significant (low-order) 3 bits of the first byte of the data element header. The size index is encoded as follows.

Size Index	Additional bits	Data Size
0	0	1 byte. Exception: if the data element type is nil, the data size is 0 bytes.
1	0	2 bytes
2	0	4 bytes
3	0	8 bytes
4	0	16 bytes
5	8	The data size is contained in the additional 8 bits, which are interpreted as an unsigned integer.
6	16	The data size is contained in the additional 16 bits, which are interpreted as an unsigned integer.
7	32	The data size is contained in the additional 32 bits, which are interpreted as an unsigned integer.

Table 3.2:

3.4 DATA ELEMENT EXAMPLES

Nil is represented as:

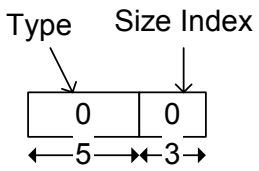

A 16-bit signed integer is represented as:

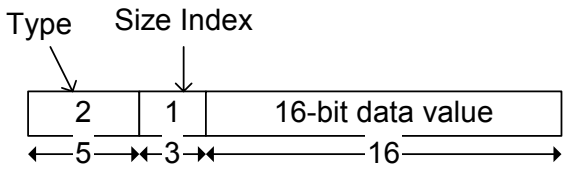

The 3 character ASCII string "Hat" is represented as:

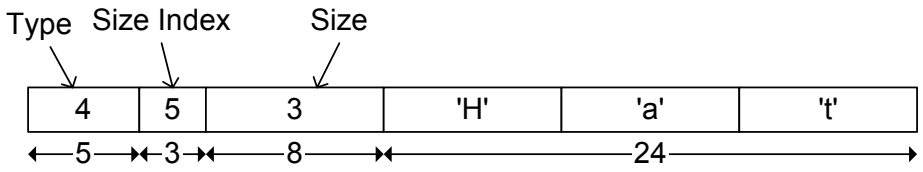

Figure 3.1:

4 PROTOCOL DESCRIPTION

SDP is a simple protocol with minimal requirements on the underlying transport. It can function over a reliable packet transport (or even unreliable, if the client implements timeouts and repeats requests as necessary).

SDP uses a request/response model where each transaction consists of one request protocol data unit (PDU) and one response PDU. In the case where SDP is used with the Bluetooth L2CAP transport protocol, only one SDP request PDU per connection to a given SDP server may be outstanding at a given instant. In other words, a client must receive a response to each request before issuing another request on the same L2CAP connection. Limiting SDP to sending one unacknowledged request PDU provides a simple form of flow control.

The protocol examples found in Appendix B – Example SDP Transactions, may be helpful in understanding the protocol transactions.

4.1 TRANSFER BYTE ORDER

The service discovery protocol transfers multiple-byte fields in standard network byte order (Big Endian), with more significant (high-order) bytes being transferred before less-significant (low-order) bytes.

4.2 PROTOCOL DATA UNIT FORMAT

Every SDP PDU consists of a PDU header followed by PDU-specific parameters. The header contains three fields: a PDU ID, a Transaction ID, and a ParameterLength. Each of these header fields is described here. Parameters may include a continuation state parameter, described below; PDU-specific parameters for each PDU type are described later in separate PDU descriptions.

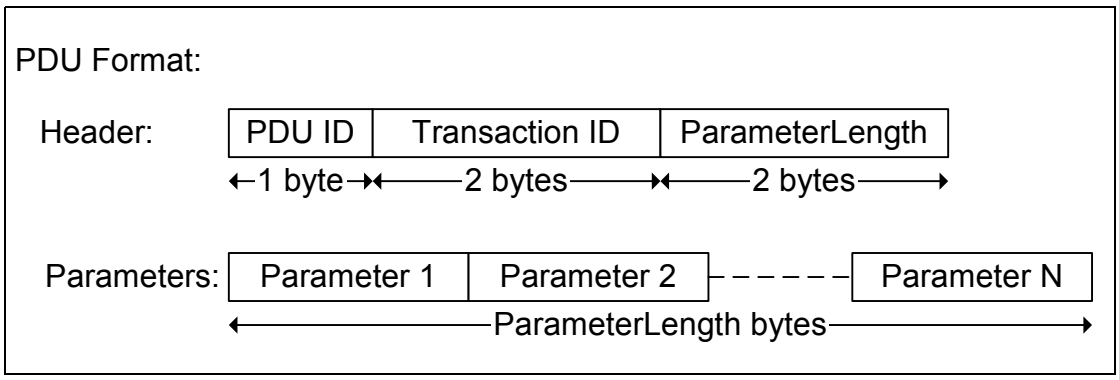

Figure 4.1:

PDU ID: *Size: 1 Byte*

Value	Parameter Description
N	The PDU ID field identifies the type of PDU. I.e. its meaning and the specific parameters.
0x00	Reserved
0x01	SDP_ErrorResponse
0x02	SDP_ServiceSearchRequest
0x03	SDP_ServiceSearchResponse
0x04	SDP_ServiceAttributeRequest
0x05	SDP_ServiceAttributeResponse
0x06	SDP_ServiceSearchAttributeRequest
0x07	SDP_ServiceSearchAttributeResponse
0x07-0xFF	Reserved

TransactionID: *Size: 2 Bytes*

Value	Parameter Description
N	The TransactionID field uniquely identifies request PDUs and is used to match response PDUs to request PDUs. The SDP client can choose any value for a request's TransactionID provided that it is different from all outstanding requests. The TransactionID value in response PDUs is required to be the same as the request that is being responded to. Range: 0x0000 – 0xFFFF

ParameterLength: *Size: 2 Bytes*

Value	Parameter Description
N	The ParameterLength field specifies the length (in bytes) of all parameters contained in the PDU. Range: 0x0000 – 0xFFFF

4.3 PARTIAL RESPONSES AND CONTINUATION STATE

Some SDP requests may require responses that are larger than can fit in a single response PDU. In this case, the SDP server will generate a partial response along with a continuation state parameter. The continuation state parameter can be supplied by the client in a subsequent request to retrieve the next portion of the complete response. The continuation state parameter is a variable length field whose first byte contains the number of additional bytes of continuation information in the field. The format of the continuation information is not standardized among SDP servers. Each continuation state parameter is meaningful only to the SDP server that generated it.

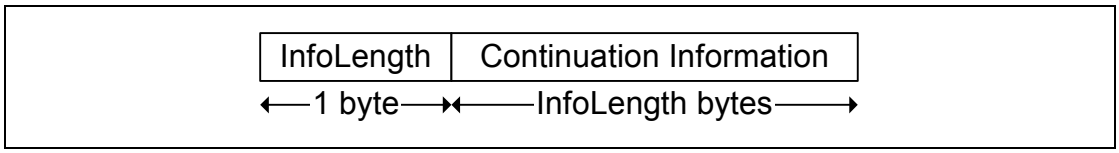

Figure 4.2: Continuation State Format

After a client receives a partial response and the accompanying continuation state parameter, it can re-issue the original request (with a new transaction ID) and include the continuation state in the new request indicating to the server that the remainder of the original response is desired. The maximum allowable value of the InfoLength field is 16 (0x10).

Note that an SDP server can split a response at any arbitrary boundary when it generates a partial response. The SDP server may select the boundary based on the contents of the reply, but is not required to do so.

4.4 ERROR HANDLING

Each transaction consists of a request and a response PDU. Generally, each type of request PDU has a corresponding type of response PDU. However, if the server determines that a request is improperly formatted or for any reason the server cannot respond with the appropriate PDU type, it will respond with an SDP_ErrorResponse PDU.

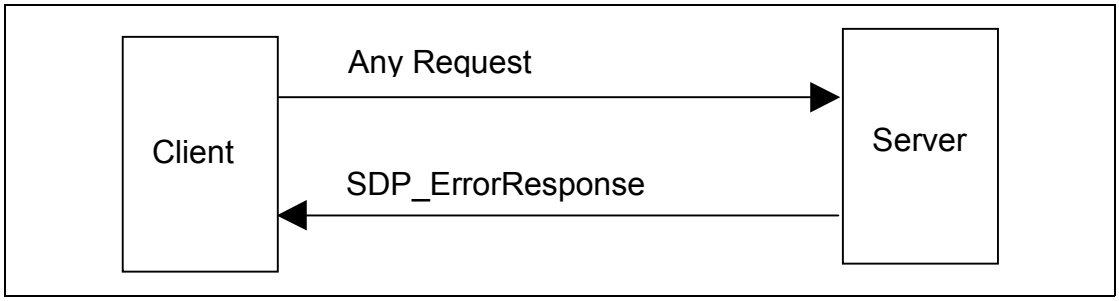

Figure 4.3:

4.4.1 SDP_ErrorResponse PDU

PDU Type	PDU ID	Parameters
SDP_ErrorResponse	0x01	ErrorCode, ErrorInfo

Description:

The SDP server generates this PDU type in response to an improperly formatted request PDU or when the SDP server, for whatever reason, cannot generate an appropriate response PDU.

PDU Parameters:

ErrorCode: *Size: 2 Bytes*

Value	Parameter Description
N	The ErrorCode identifies the reason that an SDP_ErrorResponse PDU was generated.
0x0000	Reserved
0x0001	Invalid/unsupported SDP version
0x0002	Invalid Service Record Handle
0x0003	Invalid request syntax
0x0004	Invalid PDU Size
0x0005	Invalid Continuation State
0x0006	Insufficient Resources to satisfy Request
0x0007-0xFFFF	Reserved

ErrorInfo: *Size: N Bytes*

Value	Parameter Description
Error-specific	ErrorInfo is an ErrorCode-specific parameter. Its interpretation depends on the ErrorCode parameter. The currently defined ErrorCode values do not specify the format of an ErrorInfo field.

4.5 SERVICESEARCH TRANSACTION

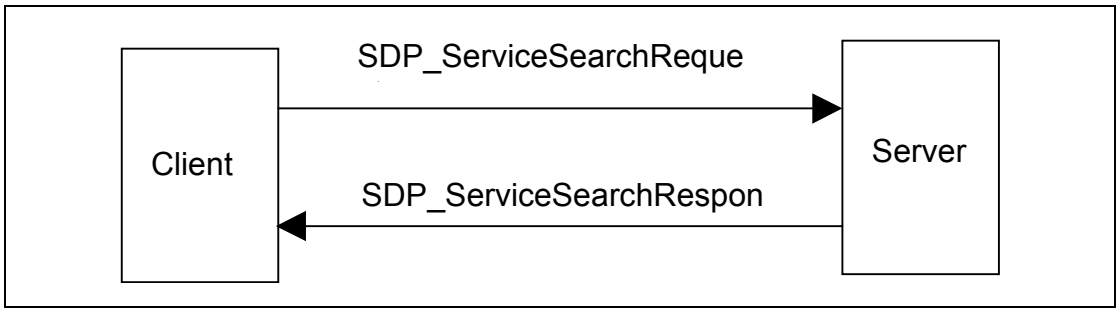

Figure 4.4:

4.5.1 SDP_ServiceSearchRequest PDU

PDU Type	PDU ID	Parameters
SDP_ServiceSearchRequest	0x02	ServiceSearchPattern, MaximumServiceRecordCount, ContinuationState

Description:

The SDP client generates an SDP_ServiceSearchRequest to locate service records that match the service search pattern given as the first parameter of the PDU. Upon receipt of this request, the SDP server will examine its service record data base and return an SDP_ServiceSearchResponse containing the service record handles of service records that match the given service search pattern.

Note that no mechanism is provided to request information for all service records. However, see section 2.8 on page 124 for a description of a mechanism that permits browsing for non-specific services without a priori knowledge of the services.

PDU Parameters:

ServiceSearchPattern: *Size: Varies*

Value	Parameter Description
Data Element Sequence	The ServiceSearchPattern is a data element sequence where each element in the sequence is a UUID. The sequence must contain at least one UUID. The maximum number of UUIDs in the sequence is 12[1]. The list of UUIDs constitutes a service search pattern.

1. The value of 12 has been selected as a compromise between the scope of a service search and the size of a search request PDU. It is not expected that more than 12 UUIDs will be useful in a service search pattern.

MaximumServiceRecordCount: *Size: 2 Bytes*

Value	Parameter Description
N	MaximumServiceRecordCount is a 16-bit count specifying the maximum number of service record handles to be returned in the response(s) to this request. The SDP server should not return more handles than this value specifies. If more than N service records match the request, the SDP server determines which matching service record handles to return in the response(s). Range: 0x0001-0xFFFF

ContinuationState: *Size: 1 to 17 Bytes*

Value	**Parameter Description**
Continuation State	ContinuationState consists of an 8-bit count, N, of the number of bytes of continuation state information, followed by the N bytes of continuation state information that were returned in a previous response from the server. N is required to be less than or equal to 16. If no continuation state is to be provided in the request, N is set to 0.

4.5.2 SDP_ServiceSearchResponse PDU

PDU Type	**PDU ID**	**Parameters**
SDP_ServiceSearchResponse	0x03	TotalServiceRecordCount, CurrentServiceRecordCount, ServiceRecordHandleList, ContinuationState

Description:

The SDP server generates an SDP_ServiceSearchResponse upon receipt of a valid SDP_ServiceSearchRequest. The response contains a list of service record handles for service records that match the service search pattern given in the request. Note that if a partial response is generated, it must contain an integral number of complete service record handles; a service record handle value may not be split across multiple PDUs.

PDU Parameters:

TotalServiceRecordCount: *Size: 2 Bytes*

Value	Parameter Description
N	The TotalServiceRecordCount is an integer containing the number of service records that match the requested service search pattern. If no service records match the requested service search pattern, this parameter is set to 0. N should never be larger than the MaximumServiceRecordCount value specified in the SDP_ServiceSearchRequest. When multiple partial responses are used, each partial response contains the same value for TotalServiceRecordCount. Range: 0x0000-0xFFFF

CurrentServiceRecordCount: *Size: 2 Bytes*

Value	Parameter Description
N	The CurrentServiceRecordCount is an integer indicating the number of service record handles that are contained in the next parameter. If no service records match the requested service search pattern, this parameter is set to 0. N should never be larger than the TotalServiceRecordCount value specified in the current response. Range: 0x0000-0xFFFF

ServiceRecordHandleList: *Size: (CurrentServiceRecordCount*4) Bytes*

Value	Parameter Description
List of 32-bit handles	The ServiceRecordHandleList contains a list of service record handles. The number of handles in the list is given in the CurrentServiceRecordCount parameter. Each of the handles in the list refers to a service record that matches the requested service search pattern. Note that this list of service record handles does not have the format of a data element. It contains no header fields, only the 32-bit service record handles.

ContinuationState: *Size: 1 to 17 Bytes*

Value	Parameter Description
Continuation State	ContinuationState consists of an 8-bit count, N, of the number of bytes of continuation state information, followed by the N bytes of continuation information. If the current response is complete, this parameter consists of a single byte with the value 0. If a partial response is contained in the PDU, the ContinuationState parameter may be supplied in a subsequent request to retrieve the remainder of the response.

4.6 SERVICEATTRIBUTE TRANSACTION

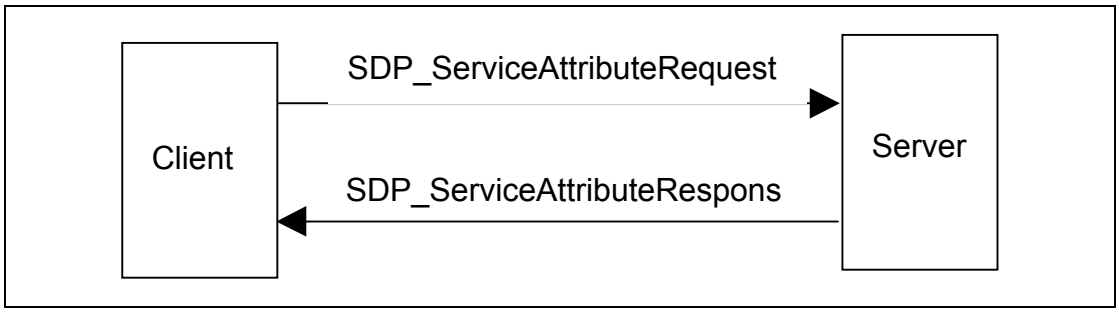

Figure 4.5:

4.6.1 SDP_ServiceAttributeRequest PDU

PDU Type	PDU ID	Parameters
SDP_ServiceAttributeRequest	0x04	ServiceRecordHandle, MaximumAttributeByteCount, AttributeIDList, ContinuationState

Description:

The SDP client generates an SDP_ServiceAttributeRequest to retrieve specified attribute values from a specific service record. The service record handle of the desired service record and a list of desired attribute IDs to be retrieved from that service record are supplied as parameters.

Command Parameters:

ServiceRecordHandle: *Size: 4 Bytes*

Value	Parameter Description
32-bit handle	The ServiceRecordHandle parameter specifies the service record from which attribute values are to be retrieved. The handle is obtained via a previous SDP_ServiceSearch transaction.

MaximumAttributeByteCount: *Size: 2 Bytes*

Value	Parameter Description
N	MaximumAttributeByteCount specifies the maximum number of bytes of attribute data to be returned in the response to this request. The SDP server should not return more than N bytes of attribute data in the response PDU. If the requested attributes require more than N bytes, the SDP server determines how to segment the list. In this case the client may request each successive segment by issuing a request containing the continuation state that was returned in the previous response PDU. Note that in the case where multiple response PDUs are needed to return the attribute data, MaximumAttributeByteCount specifies the maximum size of the portion of the attribute data contained in each response PDU. Range: 0x0007-0xFFFF

AttributeIDList: *Size: Varies*

Value	Parameter Description
Data Element Sequence	The AttributeIDList is a data element sequence where each element in the list is either an attribute ID or a range of attribute IDs. Each attribute ID is encoded as a 16-bit unsigned integer data element. Each attribute ID range is encoded as a 32-bit unsigned integer data element, where the high order 16 bits are interpreted as the beginning attribute ID of the range and the low order 16 bits are interpreted as the ending attribute ID of the range. The attribute IDs contained in the AttributeIDList must be listed in ascending order without duplication of any attribute ID values. Note that all attributes may be requested by specifying a range of 0x0000-0xFFFF.

ContinuationState: *Size: 1 to 17 Bytes*

Value	Parameter Description
Continuation State	ContinuationState consists of an 8-bit count, N, of the number of bytes of continuation state information, followed by the N bytes of continuation state information that were returned in a previous response from the server. N is required to be less than or equal to 16. If no continuation state is to be provided in the request, N is set to 0.

4.6.2 SDP_ServiceAttributeResponse PDU

PDU Type	PDU ID	Parameters
SDP_ServiceAttributeResponse	0x05	AttributeListByteCount, AttributeList, ContinuationState

Description:

The SDP server generates an SDP_ServiceAttributeResponse upon receipt of a valid SDP_ServiceAttributeRequest. The response contains a list of attributes (both attribute ID and attribute value) from the requested service record.

PDU Parameters:

AttributeListByteCount: *Size: 2 Bytes*

Value	Parameter Description
N	The AttributeListByteCount contains a count of the number of bytes in the AttributeList parameter. N must never be larger than the MaximumAttributeByteCount value specified in the SDP_ServiceAttributeRequest. Range: 0x0002-0xFFFF

AttributeList: *Size: AttributeListByteCount*

Value	Parameter Description
Data Element Sequence	The AttributeList is a data element sequence containing attribute IDs and attribute values. The first element in the sequence contains the attribute ID of the first attribute to be returned. The second element in the sequence contains the corresponding attribute value. Successive pairs of elements in the list contain additional attribute ID and value pairs. Only attributes that have non-null values within the service record and whose attribute IDs were specified in the SDP_ServiceAttributeRequest are contained in the AttributeList. Neither an attribute ID nor an attribute value is placed in the AttributeList for attributes in the service record that have no value. The attributes are listed in ascending order of attribute ID value.

ContinuationState: *Size: 1 to 17 Bytes*

Value	Parameter Description
Continuation State	ContinuationState consists of an 8-bit count, N, of the number of bytes of continuation state information, followed by the N bytes of continuation information. If the current response is complete, this parameter consists of a single byte with the value 0. If a partial response is given, the ContinuationState parameter may be supplied in a subsequent request to retrieve the remainder of the response.

4.7 SERVICESEARCHATTRIBUTE TRANSACTION

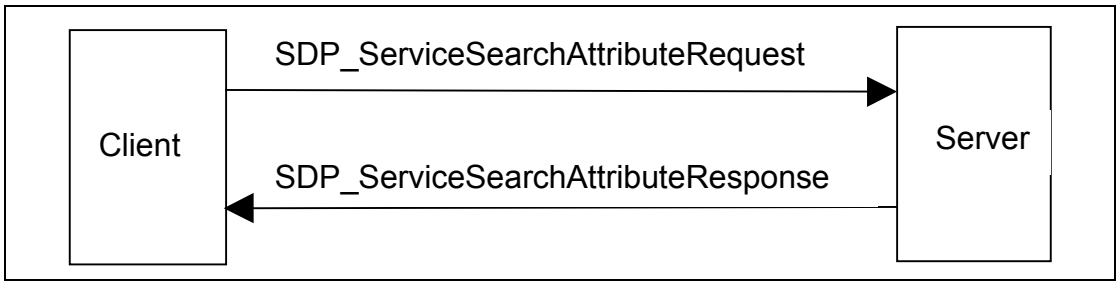

Figure 4.6:

4.7.1 SDP_ServiceSearchAttributeRequest PDU

PDU Type	PDU ID	Parameters
SDP_ServiceSearchAttributeRequest	0x06	ServiceSearchPattern, MaximumAttributeByteCount, AttributeIDList, ContinuationState

Description:

The SDP_ServiceSearchAttributeRequest transaction combines the capabilities of the SDP_ServiceSearchRequest and the SDP_ServiceAttributeRequest into a single request. As parameters, it contains both a service search pattern and a list of attributes to be retrieved from service records that match the service search pattern. The SDP_ServiceSearchAttributeRequest and its response are more complex and may require more bytes than separate SDP_ServiceSearch and SDP_ServiceAttribute transactions. However, using SDP_ServiceSearchAttributeRequest may reduce the total number of SDP transactions, particularly when retrieving multiple service records.

Note that the service record handle for each service record is contained in the ServiceRecordHandle attribute of that service and may be requested along with other attributes.

PDU Parameters:

ServiceSearchPattern: *Size: Varies*

Value	Parameter Description
Data Element Sequence	The ServiceSearchPattern is a data element sequence where each element in the sequence is a UUID. The sequence must contain at least one UUID. The maximum number of UUIDs in the sequence is 12[1]. The list of UUIDs constitutes a service search pattern.

1. The value of 12 has been selected as a compromise between the scope of a service search and the size of a search request PDU. It is not expected that more than 12 UUIDs will be useful in a service search pattern.

MaximumAttributeByteCount: *Size: 2 Bytes*

Value	Parameter Description
N	MaximumAttributeByteCount specifies the maximum number of bytes of attribute data to be returned in the response to this request. The SDP server should not return more than N bytes of attribute data in the response PDU. If the requested attributes require more than N bytes, the SDP server determines how to segment the list. In this case the client may request each successive segment by issuing a request containing the continuation state that was returned in the previous response PDU. Note that in the case where multiple response PDUs are needed to return the attribute data, MaximumAttributeByteCount specifies the maximum size of the portion of the attribute data contained in each response PDU. Range: 0x0007-0xFFFF

AttributeIDList: *Size: Varies*

Value	Parameter Description
Data Element Sequence	The AttributeIDList is a data element sequence where each element in the list is either an attribute ID or a range of attribute IDs. Each attribute ID is encoded as a 16-bit unsigned integer data element. Each attribute ID range is encoded as a 32-bit unsigned integer data element, where the high order 16 bits are interpreted as the beginning attribute ID of the range and the low order 16 bits are interpreted as the ending attribute ID of the range. The attribute IDs contained in the AttributeIDList must be listed in ascending order without duplication of any attribute ID values. Note that all attributes may be requested by specifying a range of 0x0000-0xFFFF.

ContinuationState: *Size: 1 to 17 Bytes*

Value	Parameter Description
Continuation State	ContinuationState consists of an 8-bit count, N, of the number of bytes of continuation state information, followed by the N bytes of continuation state information that were returned in a previous response from the server. N is required to be less than or equal to 16. If no continuation state is to be provided in the request, N is set to 0.

4.7.2 SDP_ServiceSearchAttributeResponse PDU

PDU Type	PDU ID	Parameters
SDP_ServiceSearchAttributeResponse	0x07	AttributeListsByteCount, AttributeLists, ContinuationState

Description:

The SDP server generates an SDP_ServiceSearchAttributeResponse upon receipt of a valid SDP_ServiceSearchAttributeRequest. The response contains a list of attributes (both attribute ID and attribute value) from the service records that match the requested service search pattern.

PDU Parameters:

AttributeListsByteCount: *Size: 2 Bytes*

Value	Parameter Description
N	The AttributeListsByteCount contains a count of the number of bytes in the AttributeLists parameter. N must never be larger than the MaximumAttributeByteCount value specified in the SDP_ServiceSearchAttributeRequest. Range: 0x0002-0xFFFF

AttributeLists: *Size: Varies*

Value	Parameter Description
Data Element Sequence	The AttributeLists is a data element sequence where each element in turn is a data element sequence representing an attribute list. Each attribute list contains attribute IDs and attribute values from one service record. The first element in each attribute list contains the attribute ID of the first attribute to be returned for that service record. The second element in each attribute list contains the corresponding attribute value. Successive pairs of elements in each attribute list contain additional attribute ID and value pairs. Only attributes that have non-null values within the service record and whose attribute IDs were specified in the SDP_ServiceSearchAttributeRequest are contained in the AttributeLists. Neither an attribute ID nor attribute value is placed in AttributeLists for attributes in the service record that have no value. Within each attribute list, the attributes are listed in ascending order of attribute ID value.

ContinuationState: *Size: 1 to 17 Bytes*

Value	Parameter Description
Continuation State	ContinuationState consists of an 8-bit count, N, of the number of bytes of continuation state information, followed by the N bytes of continuation information. If the current response is complete, this parameter consists of a single byte with the value 0. If a partial response is given, the ContinuationState parameter may be supplied in a subsequent request to retrieve the remainder of the response.

5 SERVICE ATTRIBUTE DEFINITIONS

The service classes and attributes contained in this document are necessarily a partial list of the service classes and attributes supported by SDP. Only service classes that directly support the SDP server are included in this document. Additional service classes will be defined in other documents and possibly in future revisions of this document. Also, it is expected that additional attributes will be discovered that are applicable to a broad set of services; these may be added to the list of Universal attributes in future revisions of this document.

5.1 UNIVERSAL ATTRIBUTE DEFINITIONS

Universal attributes are those service attributes whose definitions are common to all service records. Note that this does not mean that every service record must contain values for all of these service attributes. However, if a service record has a service attribute with an attribute ID allocated to a universal attribute, the attribute value must conform to the universal attribute's definition.

Only two attributes are required to exist in every service record instance. They are the ServiceRecordHandle (attribute ID 0x0000) and the ServiceClassIDList (attribute ID 0x0001). All other service attributes are optional within a service record.

5.1.1 ServiceRecordHandle Attribute

Attribute Name	Attribute ID	Attribute Value Type
ServiceRecordHandle	0x0000	32-bit unsigned integer

Description:

A service record handle is a 32-bit number that uniquely identifies each service record within an SDP server. It is important to note that, in general, each handle is unique only within each SDP server. If SDP server S1 and SDP server S2 both contain identical service records (representing the same service), the service record handles used to reference these identical service records are completely independent. The handle used to reference the service on S1 will, in general, be meaningless if presented to S2.

5.1.2 ServiceClassIDList Attribute

Attribute Name	Attribute ID	Attribute Value Type
ServiceClassIDList	0x0001	Data Element Sequence

Description:

The ServiceClassIDList attribute consists of a data element sequence in which each data element is a UUID representing the service classes that a given service record conforms to. The UUIDs are listed in order from the most specific class to the most general class. The ServiceClassIDList must contain at least one service class UUID.

5.1.3 ServiceRecordState Attribute

Attribute Name	Attribute ID	Attribute Value Type
ServiceRecordState	0x0002	32-bit unsigned integer

Description:

The ServiceRecordState is a 32-bit integer that is used to facilitate caching of ServiceAttributes. If this attribute is contained in a service record, its value is guaranteed to change when any other attribute value is added to, deleted from or changed within the service record. This permits a client to check the value of this single attribute. If its value has not changed since it was last checked, the client knows that no other attribute values within the service record have changed.

5.1.4 ServiceID Attribute

Attribute Name	Attribute ID	Attribute Value Type
ServiceID	0x0003	UUID

Description:

The ServiceID is a UUID that universally and uniquely identifies the service instance described by the service record. This service attribute is particularly useful if the same service is described by service records in more than one SDP server.

5.1.5 ProtocolDescriptorList Attribute

Attribute Name	Attribute ID	Attribute Value Type
ProtocolDescriptorList	0x0004	Data Element Sequence or Data Element Alternative

Description:

The ProtocolDescriptorList attribute describes one or more protocol stacks that may be used to gain access to the service described by the service record.

If the ProtocolDescriptorList describes a single stack, it takes the form of a data element sequence in which each element of the sequence is a protocol descriptor. Each protocol descriptor is, in turn, a data element sequence whose first element is a UUID identifying the protocol and whose successive elements are protocol-specific parameters. Potential protocol-specific parameters are a protocol version number and a connection-port number. The protocol descriptors are listed in order from the lowest layer protocol to the highest layer protocol used to gain access to the service.

If it is possible for more than one kind of protocol stack to be used to gain access to the service, the ProtocolDescriptorList takes the form of a data element alternative where each member is a data element sequence as described in the previous paragraph.

Protocol Descriptors

A protocol descriptor identifies a communications protocol and provides protocol-specific parameters. A protocol descriptor is represented as a data element sequence. The first data element in the sequence must be the UUID that identifies the protocol. Additional data elements optionally provide protocol-specific information, such as the L2CAP protocol/service multiplexer (PSM) and the RFCOMM server channel number (CN) shown below.

ProtocolDescriptorList Examples

These examples are intended to be illustrative. The parameter formats for each protocol are not defined within this specification.

In the first two examples, it is assumed that a single RFCOMM instance exists on top of the L2CAP layer. In this case, the L2CAP protocol specific information (PSM) points to the single instance of RFCOMM. In the last example, two different and independent RFCOMM instances are available on top of the L2CAP layer. In this case, the L2CAP protocol specific information (PSM) points to a distinct identifier that distinguishes each of the RFCOMM instances. According to the L2CAP specification, this identifier takes values in the range 0x1000-0xFFFF.

IrDA-like printer

((L2CAP, PSM=RFCOMM), (RFCOMM, CN=1), (PostscriptStream))

IP Network Printing

((L2CAP, PSM=RFCOMM), (RFCOMM, CN=2), (PPP), (IP), (TCP), (IPP))

Synchronization Protocol Descriptor Example

((L2CAP, PSM=0x1001), (RFCOMM, CN=1), (Obex), (vCal))

((L2CAP, PSM=0x1002), (RFCOMM, CN=1), (Obex), (otherSynchronisationApplication))

5.1.6 BrowseGroupList Attribute

Attribute Name	Attribute ID	Attribute Value Type
BrowseGroupList	0x0005	Data Element Sequence

Description:

The BrowseGroupList attribute consists of a data element sequence in which each element is a UUID that represents a browse group to which the service record belongs. The top-level browse group ID, called PublicBrowseRoot and representing the root of the browsing hierarchy, has the value 00001002-0000-1000-8000-00805F9B34FB (UUID16: 0x1002) from the Bluetooth Assigned Numbers document.

5.1.7 LanguageBaseAttributeIDList Attribute

Attribute Name	Attribute ID	Attribute Value Type
LanguageBaseAttributeIDList	0x0006	Data Element Sequence

Description:

In order to support human-readable attributes for multiple natural languages in a single service record, a base attribute ID is assigned for each of the natural languages used in a service record. The human-readable universal attributes are then defined with an attribute ID offset from each of these base values, rather than with an absolute attribute ID.

The LanguageBaseAttributeIDList attribute is a list in which each member contains a language identifier, a character encoding identifier, and a base attribute

ID for each of the natural languages used in the service record. The LanguageBaseAttributeIDList attribute consists of a data element sequence in which each element is a 16-bit unsigned integer. The elements are grouped as triplets (threes).

The first element of each triplet contains an identifier representing the natural language. The language is encoded according to ISO 639:1988 (E/F): “Code for the representation of names of languages”.

The second element of each triplet contains an identifier that specifies a character encoding used for the language. Values for character encoding can be found in IANA's database[1], and have the values that are referred to as MIBEnum values. The recommended character encoding is UTF-8.

The third element of each triplet contains an attribute ID that serves as the base attribute ID for the natural language in the service record. Different service records within a server may use different base attribute ID values for the same language.

To facilitate the retrieval of human-readable universal attributes in a principal language, the base attribute ID value for the primary language supported by a service record must be 0x0100. Also, if a LanguageBaseAttributeIDList attribute is contained in a service record, the base attribute ID value contained in its first element must be 0x0100.

5.1.8 ServiceInfoTimeToLive Attribute

Attribute Name	Attribute ID	Attribute Value Type
ServiceInfoTimeToLive	0x0007	32-bit unsigned integer

Description:

The ServiceTimeToLive attribute is a 32-bit integer that contains the number of seconds for which the information in a service record is expected to remain valid and unchanged. This time interval is measured from the time that the attribute value is retrieved from the SDP server. This value does not imply a guarantee that the service record will remain available or unchanged. It is simply a hint that a client may use to determine a suitable polling interval to revalidate the service record contents.

1. See http://www.isi.edu/in-notes/iana/assignments/character-sets

5.1.9 ServiceAvailability Attribute

Attribute Name	Attribute ID	Attribute Value Type
ServiceAvailability	0x0008	8-bit unsigned integer

Description:

The ServiceAvailability attribute is an 8-bit unsigned integer that represents the relative ability of the service to accept additional clients. A value of 0xFF indicates that the service is not currently in use and is thus fully available, while a value of 0x00 means that the service is not accepting new clients. For services that support multiple simultaneous clients, intermediate values indicate the relative availability of the service on a linear scale.

For example, a service that can accept up to 3 clients should provide ServiceAvailability values of 0xFF, 0xAA, 0x55, and 0x00 when 0, 1, 2, and 3 clients, respectively, are utilizing the service. The value 0xAA is approximately (2/3) * 0xFF and represents 2/3 availability, while the value 0x55 is approximately (1/3)*0xFF and represents 1/3 availability. Note that the availability value may be approximated as

(1 - (current_number_of_clients / maximum_number_of_clients)) * 0xFF

When the maximum number of clients is large, this formula must be modified to ensure that ServiceAvailability values of 0x00 and 0xFF are reserved for their defined meanings of unavailability and full availability, respectively.

Note that the maximum number of clients a service can support may vary according to the resources utilized by the service's current clients.

A non-zero value for ServiceAvailability does not guarantee that the service will be available for use. It should be treated as a hint or an approximation of availability status.

5.1.10 BluetoothProfileDescriptorList Attribute

Attribute Name	Attribute ID	Attribute Value Type
BluetoothProfileDescriptorList	0x0009	Data Element Sequence

Description:

The BluetoothProfileDescriptorList attribute consists of a data element sequence in which each element is a profile descriptor that contains information about a Bluetooth profile to which the service represented by this service record conforms. Each profile descriptor is a data element sequence whose first element is the UUID assigned to the profile and whose second element is a 16-bit profile version number.

Each version of a profile is assigned a 16-bit unsigned integer profile version number, which consists of two 8-bit fields. The higher-order 8 bits contain the major version number field and the lower-order 8 bits contain the minor version number field. The initial version of each profile has a major version of 1 and a minor version of 0. When upward compatible changes are made to the profile, the minor version number will be incremented. If incompatible changes are made to the profile, the major version number will be incremented.

5.1.11 DocumentationURL Attribute

Attribute Name	Attribute ID	Attribute Value Type
DocumentationURL	0x000A	URL

Description:

This attribute is a URL which points to documentation on the service described by a service record.

5.1.12 ClientExecutableURL Attribute

Attribute Name	Attribute ID	Attribute Value Type
ClientExecutableURL	0x000B	URL

Description:

This attribute contains a URL that refers to the location of an application that may be used to utilize the service described by the service record. Since different operating environments require different executable formats, a mechanism has been defined to allow this single attribute to be used to locate an executable that is appropriate for the client device's operating environment. In the attribute value URL, the first byte with the value 0x2A (ASCII character '*') is to be replaced by the client application with a string representing the desired operating environment before the URL is to be used.

The list of standardized strings representing operating environments is contained in the Bluetooth Assigned Numbers document.

For example, assume that the value of the ClientExecutableURL attribute is http://my.fake/public/*/client.exe. On a device capable of executing SH3 WindowsCE files, this URL would be changed to http://my.fake/public/sh3-microsoft-wince/client.exe. On a device capable of executing Windows 98 binaries, this URL would be changed to http://my.fake/public/i86-microsoft-win98/client.exe.

5.1.13 IconURL Attribute

Attribute Name	Attribute ID	Attribute Value Type
IconURL	0x000C	URL

Description:

This attribute contains a URL that refers to the location of an icon that may be used to represent the service described by the service record. Since different hardware devices require different icon formats, a mechanism has been defined to allow this single attribute to be used to locate an icon that is appropriate for the client device. In the attribute value URL, the first byte with the value 0x2A (ASCII character '*') is to be replaced by the client application with a string representing the desired icon format before the URL is to be used.

The list of standardized strings representing icon formats is contained in the Bluetooth Assigned Numbers document.

For example, assume that the value of the IconURL attribute is http://my.fake/public/icons/*. On a device that prefers 24 x 24 icons with 256 colors, this URL would be changed to http://my.fake/public/icons/24x24x8.png. On a device that prefers 10 x 10 monochrome icons, this URL would be changed to http://my.fake/public/icons/10x10x1.png.

5.1.14 ServiceName Attribute

Attribute Name	Attribute ID Offset	Attribute Value Type
ServiceName	0x0000	String

Description:

The ServiceName attribute is a string containing the name of the service represented by a service record. It should be brief and suitable for display with an Icon representing the service. The offset 0x0000 must be added to the attribute ID base (contained in the LanguageBaseAttributeIDList attribute) in order to compute the attribute ID for this attribute.

5.1.15 ServiceDescription Attribute

Attribute Name	Attribute ID Offset	Attribute Value Type
ServiceDescription	0x0001	String

Description:

This attribute is a string containing a brief description of the service. It should be less than 200 characters in length. The offset 0x0001 must be added to the attribute ID base (contained in the LanguageBaseAttributeIDList attribute) in order to compute the attribute ID for this attribute.

5.1.16 ProviderName Attribute

Attribute Name	Attribute ID Offset	Attribute Value Type
ProviderName	0x0002	String

Description:

This attribute is a string containing the name of the person or organization providing the service. The offset 0x0002 must be added to the attribute ID base (contained in the LanguageBaseAttributeIDList attribute) in order to compute the attribute ID for this attribute.

5.1.17 Reserved Universal Attribute IDs

Attribute IDs in the range of 0x000D-0x01FF are reserved.

5.2 SERVICEDISCOVERYSERVER SERVICE CLASS ATTRIBUTE DEFINITIONS

This service class describes service records that contain attributes of service discovery server itself. The attributes listed in this section are only valid if the ServiceClassIDList attribute contains the ServiceDiscoveryServerServiceClassID. Note that all of the universal attributes may be included in service records of the ServiceDiscoveryServer class.

5.2.1 ServiceRecordHandle Attribute

Described in the universal attribute definition for ServiceRecordHandle.

Value

A 32-bit integer with the value 0x000000000.

5.2.2 ServiceClassIDList Attribute

Described in the universal attribute definition for ServiceClassIDList.

Value

A UUID representing the ServiceDiscoveryServerServiceClassID.

5.2.3 VersionNumberList Attribute

Attribute Name	Attribute ID	Attribute Value Type
VersionNumberList	0x0200	Data Element Sequence

Description:

The VersionNumberList is a data element sequence in which each element of the sequence is a version number supported by the SDP server.

A version number is a 16-bit unsigned integer consisting of two fields. The higher-order 8 bits contain the major version number field and the low-order 8 bits contain the minor version number field. The initial version of SDP has a major version of 1 and a minor version of 0. When upward compatible changes are made to the protocol, the minor version number will be incremented. If incompatible changes are made to SDP, the major version number will be incremented. This guarantees that if a client and a server support a common major version number, they can communicate if each uses only features of the specification with a minor version number that is supported by both client and server.

5.2.4 ServiceDatabaseState Attribute

Attribute Name	Attribute ID	Attribute Value Type
ServiceDatabaseState	0x0201	32-bit unsigned integer

Description:

The ServiceDatabaseState is a 32-bit integer that is used to facilitate caching of service records. If this attribute exists, its value is guaranteed to change when any of the other service records are added to or deleted from the server's database. If this value has not changed since the last time a client queried its value, the client knows that a) none of the other service records maintained by the SDP server have been added or deleted; and b) any service record handles acquired from the server are still valid. A client should query this attribute's value when a connection to the server is established, prior to using any service record handles acquired during a previous connection.

Note that the ServiceDatabaseState attribute does not change when existing service records are modified, including the addition, removal, or modification of service attributes. A service record's ServiceRecordState attribute indicates when that service record is modified.

5.2.5 Reserved Attribute IDs

Attribute IDs in the range of 0x0202-0x02FF are reserved.

5.3 BROWSEGROUPDESCRIPTOR SERVICE CLASS ATTRIBUTE DEFINITIONS

This service class describes the ServiceRecord provided for each BrowseGroupDescriptor service offered on a Bluetooth device. The attributes listed in this section are only valid if the ServiceClassIDList attribute contains the BrowseGroupDescriptorServiceClassID. Note that all of the universal attributes may be included in service records of the BrowseGroupDescriptor class.

5.3.1 ServiceClassIDList Attribute

Described in the universal attribute definition for ServiceClassIDList.

Value

A UUID representing the BrowseGroupDescriptorServiceClassID.

5.3.2 GroupID Attribute

Attribute Name	Attribute ID	Attribute Value Type
GroupID	0x0200	UUID

Description:

This attribute contains a UUID that can be used to locate services that are members of the browse group that this service record describes.

5.3.3 Reserved Attribute IDs

Attribute IDs in the range of 0x0201-0x02FF are reserved.

APPENDIX A – BACKGROUND INFORMATION

A.1. Service Discovery

As computing continues to move to a network-centric model, finding and making use of services that may be available in the network becomes increasingly important. Services can include common ones such as printing, paging, FAXing, and so on, as well as various kinds of information access such as teleconferencing, network bridges and access points, eCommerce facilities, and so on — most any kind of service that a server or service provider might offer. In addition to the need for a standard way of discovering available services, there are other considerations: getting access to the services (finding and obtaining the protocols, access methods, “drivers” and other code necessary to utilize the service), controlling access to the services, advertising the services, choosing among competing services, billing for services, and so on. This problem is widely recognized; many companies, standards bodies and consortia are addressing it at various levels in various ways. Service Location Protocol (SLP), Jini™, and Salutation™, to name just a few, all address some aspect of service discovery.

A.2. Bluetooth Service Discovery

Bluetooth Service Discovery Protocol (SDP) addresses service discovery specifically for the Bluetooth environment. It is optimized for the highly dynamic nature of Bluetooth communications. SDP focuses primarily on discovering services available from or through Bluetooth devices. SDP does not define methods for accessing services; once services are discovered with SDP, they can be accessed in various ways, depending upon the service. This might include the use of other service discovery and access mechanisms such as those mentioned above; SDP provides a means for other protocols to be used along with SDP in those environments where this can be beneficial. While SDP can coexist with other service discovery protocols, it does not require them. In Bluetooth environments, services can be discovered using SDP and can be accessed using other protocols defined by Bluetooth.

APPENDIX B – EXAMPLE SDP TRANSACTIONS

The following are simple examples of typical SDP transactions. These are meant to be illustrative of SDP flows. The examples do not consider:

- Caching (in a caching system, the SDP client would make use of the ServiceRecordState and ServiceDatabaseState attributes);
- Service availability (if this is of interest, the SDP client should use the ServiceAvailability and/or ServiceTimeToLive attributes);
- SDP versions (the VersionNumberList attribute could be used to determine compatible SDP versions);
- SDP Error Responses (an SDP error response is possible for any SDP request that is in error); and
- Communication connection (the examples assume that an L2CAP connection is established).

The examples are meant to be illustrative of the protocol. The format used is `ObjectName[ObjectSizeInBytes] {SubObjectDefinitions}`, but this is not meant to illustrate an interface. The `ObjectSizeInBytes` is the size of the object in decimal. The `SubObjectDefinitions` (inside of `{}` characters) are components of the immediately enclosing object. Hexadecimal values shown as lower-case letters, such as for transaction IDs and service handles, are variables (the particular value is not important for the illustration, but each such symbol always represents the same value). Comments are included in this manner: `/* comment text */`.

Numeric values preceded by “0x” are hexadecimal, while those preceded by “0b” are binary. All other numeric values are decimal.

B.1. SDP Example 1 – ServiceSearchRequest

The first example is that of an SDP client searching for a generic printing service. The client does not specify a particular type of printing service. In the example, the SDP server has two available printing services. The transaction illustrates:

1. SDP client to SDP server: SDP_ServiceSearchRequest, specifying the PrinterServiceClassID (represented as a DataElement with a 32-bit UUID value of `ppp...ppp`) as the only element of the ServiceSearchPattern. The PrinterServiceClassID is assumed to be a 32-bit UUID and the data element type for it is illustrated. The TransactionID is illustrated as `tttt`.
2. SDP server to SDP client: SDP_ServiceSearchResponse, returning handles to two printing services, represented as `qqqqqqqq` for the first printing service and `rrrrrrrr` for the second printing service. The Transaction ID is the same value as supplied by the SDP client in the corresponding request (ττττ).

```
/* Sent from SDP Client to SDP server */
SDP_ServiceSearchRequest[15] {
  PDUID[1] {
    0x02
  }
  TransactionID[2] {
    0xtttt
  }
  ParameterLength[2] {
    0x000A
  }
  ServiceSearchPattern[7] {
    DataElementSequence[7] {
      0b00110 0b101 0x05
      UUID[5] {
        /* PrinterServiceClassID */
        0b00011 0b010 0xpppppppp
      }
    }
  }
  MaximumServiceRecordCount[2] {
    0x0003
  }
  ContinuationState[1] {
    /* no continuation state */
    0x00
  }
}


/* Sent from SDP server to SDP client */
SDP_ServiceSearchResponse[18] {
  PDUID[1] {
    0x03
  }
  TransactionID[2] {
    0xtttt
  }
  ParameterLength[2] {
    0x000D
  }
  TotalServiceRecordCount[2] {
    0x0002
  }
  CurrentServiceRecordCount[2] {
    0x0002
  }
  ServiceRecordHandleList[8] {
    /* print service 1 handle */
    0xqqqqqqqq
    /* print service 2 handle */
    0xrrrrrrrr
  }
  ContinuationState[1] {
    /* no continuation state */
```

```
    0x00
  }
}
```

B.2. SDP Example 2 – ServiceAttributeTransaction

The second example continues the first example. In Example 1, the SDP client obtained handles to two printing services. In Example 2, the client uses one of those service handles to obtain the ProtocolDescriptorList attribute for that printing service. The transaction illustrates:

1. SDP client to SDP server: SDP_ServiceAttributeRequest, presenting the previously obtained service handle (the one denoted as `qqqqqqqq`) and specifying the ProtocolDescriptorList attribute ID (AttributeID 0x0004) as the only attribute requested (other attributes could be retrieved in the same transaction if desired). The TransactionID is illustrated as `uuuu` to distinguish it from the TransactionID of Example 1.
2. SDP server to SDP client: SDP_ServiceAttributeResponse, returning the ProtocolDescriptorList for the specified printing service. This protocol stack is assumed to be ((L2CAP), (RFCOMM, 2), (PostscriptStream)). The ProtocolDescriptorList is a data element sequence in which each element is, in turn, a data element sequence whose first element is a UUID representing the protocol, and whose subsequent elements are protocol-specific parameters. In this example, one such parameter is included for the RFCOMM protocol, an 8-bit value indicating RFCOMM server channel 2. The Transaction ID is the same value as supplied by the SDP client in the corresponding request (`uuuu`). The Attributes returned are illustrated as a data element sequence where the protocol descriptors are 32-bit UUIDs and the RFCOMM server channel is a data element with an 8-bit value of 2.

```
 /* Sent from SDP Client to SDP server */
SDP_ServiceAttributeRequest[17] {
  PDUID[1] {
    0x04
  }
  TransactionID[2] {
    0xuuuu
  }
  ParameterLength[2] {
    0x000C
  }
  ServiceRecordHandle[4] {
    0xqqqqqqqq
  }
  MaximumAttributeByteCount[2] {
    0x0080
  }
  AttributeIDList[5] {
    DataElementSequence[5] {
```

```
      0b00110 0b101 0x03
      AttributeID[3] {
        0b00001 0b001 0x0004
      }
    }
  }
  ContinuationState[1] {
    /* no continuation state */
    0x00
  }
}

/* Sent from SDP server to SDP client */
SDP_ServiceAttributeResponse[38] {
  PDUID[1] {
    0x05
  }
  TransactionID[2] {
    0xuuuu
  }
  ParameterLength[2] {
    0x0021
  }
  AttributeListByteCount[2] {
    0x001E
  }
  AttributeList[30] {
    DataElementSequence[30] {
      0b00110 0b101 0x1C
      Attribute[28] {
        AttributeID[3] {
          0b00001 0b001 0x0004
        }
        AttributeValue[25] {
          /* ProtocolDescriptorList */
          DataElementSequence[25] {
            0b00110 0b101 0x17
            /* L2CAP protocol descriptor */
            DataElementSequence[7] {
              0b00110 0b101 0x05
              UUID[5] {
                /* L2CAP Protocol UUID */
                0b00011 0b010 <32-bit L2CAP UUID>
              }
            }
            /* RFCOMM protocol descriptor */
            DataElementSequence[9] {
              0b00110 0b101 0x07
              UUID[5] {
                /* RFCOMM Protocol UUID */
                0b00011 0b010 <32-bit RFCOMM UUID>
              }
              /* parameter for server 2 */
              Uint8[2] {
                0b00001 0b000 0x02
              }
            }
```

```
            /* PostscriptStream protocol descriptor */
            DataElementSequence[7] {
              0b00110 0b101 0x05
              UUID[5] {
                /* PostscriptStream Protocol UUID */
                0b00011 0b010 <32-bit PostscriptStream UUID>
              }
            }
          }
        }
      }
    }
  }
  ContinuationState[1] {
    /* no continuation state */
    0x00
  }
}
```

B.3. SDP Example 3 – ServiceSearchAttributeTransaction

The third example is a form of service browsing, although it is not generic browsing in that it does not make use of SDP browse groups. Instead, an SDP client is searching for available Synchronization services that can be presented to the user for selection. The SDP client does not specify a particular type of synchronization service. In the example, the SDP server has three available synchronization services: an address book synchronization service and a calendar synchronization service (both from the same provider), and a second calendar synchronization service from a different provider. The SDP client is retrieving the same attributes for each of these services; namely, the data formats supported for the synchronization service (vCard, vCal, ICal, etc.) and those attributes that are relevant for presenting information to the user about the services. Also assume that the maximum size of a response is 400 bytes. Since the result is larger than this, the SDP client will repeat the request supplying a continuation state parameter to retrieve the remainder of the response. The transaction illustrates:

1. SDP client to SDP server: SDP_ServiceSearchAttributeRequest, specifying the generic SynchronisationServiceClassID (represented as a data element whose 32-bit UUID value is `sss...sss`) as the only element of the ServiceSearchPattern. The SynchronisationServiceClassID is assumed to be a 32-bit UUID. The requested attributes are the ServiceRecordHandle (attribute ID 0x0000), ServiceClassIDList (attribute ID 0x0001), IconURL (attribute ID 0x000C), ServiceName (attribute ID 0x0100), ServiceDescription (attribute ID 0x0101), and ProviderName (attributeID 0x0102) attributes; as well as the service-specific SupportedDataStores (AttributeID 0x0301). Since the first two attribute IDs (0x0000 and 0x0001) and three other attribute IDs(0x0100, 0x0101, and 0x0102 are consecutive, they are specified as attribute ranges. The TransactionID is illustrated as `vvvv` to distinguish it from the TransactionIDs of the other Examples.

Note that values in the service record's primary language are requested for the text attributes (ServiceName, ServiceDescription and ProviderName) so that absolute attribute IDs may be used, rather than adding offsets to a base obtained from the LanguageBaseAttributeIDList attribute.

2. SDP server to SDP client: SDP_ServiceSearchAttributeResponse, returning the specified attributes for each of the three synchronization services. In the example, each ServiceClassIDList is assumed to contain a single element, the generic SynchronisationServiceClassID (a 32-bit UUID represented as sss...sss). Each of the other attributes contain illustrative data in the example (the strings have illustrative text; the icon URLs are illustrative, for each of the respective three synchronization services; and the SupportedDataStore attribute is represented as an unsigned 8-bit integer where 0x01 = vCard2.1, 0x02 = vCard3.0, 0x03 = vCal1.0 and 0x04 = iCal). Note that one of the service records (the third for which data is returned) has no ServiceDescription attribute. The attributes are returned as a data element sequence, where each element is in turn a data element sequence representing a list of attributes. Within each attribute list, the ServiceClassIDList is a data element sequence while the remaining attributes are single data elements. The Transaction ID is the same value as supplied by the SDP client in the corresponding request (0xvvvv). Since the entire result cannot be returned in a single response, a non-null continuation state is returned in this first response.

   Note that the total length of the initial data element sequence (487 in the example) is indicated in the first response, even though only a portion of this data element sequence (368 bytes in the example, as indicated in the AttributeLists byte count) is returned in the first response. The remainder of this data element sequence is returned in the second response (without an additional data element header).

3. SDP client to SDP server: SDP_ServiceSearchAttributeRequest, with the same parameters as in step 1, except that the continuation state received from the server in step 2 is included as a request parameter. The TransactionID is changed to 0xwww to distinguish it from previous request.

4. SDP server to SDP client: SDP_ServiceSearchAttributeResponse, with the remainder of the result computed in step 2 above. Since all of the remaining result fits in this second response, a null continuation state is included.

```
/* Part 1 -- Sent from SDP Client to SDP server */
SdpSDP_ServiceSearchAttributeRequest[33] {
  PDUID[1] {
    0x06
  }
  TransactionID[2] {
    0xvvvv
  }
  ParameterLength[2] {
    0x001B
  }
  ServiceSearchPattern[7] {
```

```
    DataElementSequence[7] {
      0b00110 0b101 0x05
      UUID[5] {
        /* SynchronisationServiceClassID */
        0b00011 0b010 0xssssssss
      }
    }
  }
  MaximumAttributeByteCount[2] {
    0x0190
  }
AttributeIDList[18] {
    DataElementSequence[18] {
      0b00110 0b101 0x10
      AttributeIDRange[5] {
        0b00001 0b010 0x00000001
      }
      AttributeID[3] {
        0b00001 0b001 0x000C
      }
      AttributeIDRange[5] {
        0b00001 0b010 0x01000102
      }
      AttributeID[3] {
        0b00001 0b001 0x0301
      }    }
  }
  ContinuationState[1] {
    /* no continuation state */
    0x00
  }
}

/* Part 2 -- Sent from SDP server to SDP client */
SdpSDP_ServiceSearchAttributeResponse[384] {
  PDUID[1] {
    0x07
  }
  TransactionID[2] {
    0xvvvv
  }
  ParameterLength[2] {
    0x017B
  }
  AttributeListByteCount[2] {
    0x0170
  }
  AttributeLists[368] {
    DataElementSequence[487] {
      0b00110 0b110 0x01E4
      DataElementSequence[178] {
        0b00110 0b101 0xB0
        Attribute[8] {
          AttributeID[3] {
            0b00001 0b001 0x0000
          }
          AttributeValue[5] {
```

```
            /* service record handle */
            0b00001 0b010 0xhhhhhhhh
          }
        }
        Attribute[10] {
          AttributeID[3] {
            0b00001 0b001 0x0001
          }
AttributeValue[7] {
            DataElementSequence[7] {
              0b00110 0b101 0x05
              UUID[5] {
                /* SynchronisationServiceClassID */
                0b00011 0b010 0xssssssss
              }
            }
          }
        }
        Attribute[35] {
          AttributeID[3] {
            0b00001 0b001 0x000C
          }
          AttributeValue[32] {
            /* IconURL; '*' replaced by client application */
            0b01000 0b101 0x1E
            "http://Synchronisation/icons/*"
          }
        }
        Attribute[22] {
          AttributeID[3] {
            0b00001 0b001 0x0100
          }
          AttributeValue[19] {
            /* service name */
            0b00100 0b101 0x11
            "Address Book Sync"
          }
        }
        Attribute[59] {
          AttributeID[3] {
            0b00001 0b001 0x0101
          }
          AttributeValue[56] {
            /* service description */
            0b00100 0b101 0x36
            "Synchronisation Service for"
            " vCard Address Book Entries"
          }
        }
        Attribute[37] {
          AttributeID[3] {
            0b00001 0b001 0x0102
          }
          AttributeValue[34] {
            /* service provider */
            0b00100 0b101 0x20
            "Synchronisation Specialists Inc."
```

```
        }
      }
      Attribute[5] {
        AttributeID[3] {
          0b00001 0b001 0x0301
        }
        AttributeValue[2] {
          /* Supported Data Store 'phonebook' */
          0b00001 0b000 0x01
        }
      }
    }
    DataElementSequence[175] {
      0b00110 0b101 0xAD
      Attribute[8] {
        AttributeID[3] {
          0b00001 0b001 0x0000
        }
        AttributeValue[5] {
          /* service record handle */
          0b00001 0b010 0xmmmmmmmm
        }
      }
      Attribute[10] {
        AttributeID[3] {
          0b00001 0b001 0x0001
        }
                  AttributeValue[7] {
          DataElementSequence[7] {
            0b00110 0b101 0x05
            UUID[5] {
              /* SynchronisationServiceClassID */
              0b00011 0b010 0xssssssss
            }
          }
        }
      }
      Attribute[35] {
        AttributeID[3] {
          0b00001 0b001 0x000C
        }
        AttributeValue[32] {
          /* IconURL; '*' replaced by client application */
          0b01000 0b101 0x1E
          "http://Synchronisation/icons/*"
        }
      }
      Attribute[21] {
        AttributeID[3] {
          0b00001 0b001 0x0100
        }
        AttributeValue[18] {
          /* service name */
          0b00100 0b101 0x10
          "Appointment Sync"
        }
      }
```

```
        Attribute[57] {
          AttributeID[3] {
            0b00001 0b001 0x0101
          }
          AttributeValue[54] {
            /* service description */
            0b00100 0b101 0x34
            "Synchronisation Service for"
            " vCal Appointment Entries"
          }
        }
        Attribute[37] {
          AttributeID[3] {
            0b00001 0b001 0x0102
          }
          AttributeValue[34] {
            /* service provider */
            0b00100 0b101 0x20
            "Synchronisation Specialists Inc."
          }
        }
        Attribute[5] {
          AttributeID[3] {
            0b00001 0b001 0x0301
          }
          AttributeValue[2] {
            /* Supported Data Store 'calendar' */
            0b00001 0b000 0x03
          }
        }
      }
    /* } Data element sequence of attribute lists */
    /* is not completed in this PDU. */
  }
  ContinuationState[9] {
    /* 8 bytes of continuation state */
    0x08 0xzzzzzzzzzzzzzzzz
  }
}

/* Part 3 -- Sent from SDP Client to SDP server */
SdpSDP_ServiceSearchAttributeRequest[41] {
  PDUID[1] {
    0x06
  }
  TransactionID[2] {
    0xwwww
  }
  ParameterLength[2] {
    0x0024
  }
  ServiceSearchPattern[7] {
    DataElementSequence[7] {
      0b00110 0b101 0x05
      UUID[5] {
        /* SynchronisationServiceClassID */
        0b00011 0b010 0xssssssss
```

```
      }
    }
  }
  MaximumAttributeByteCount[2] {
    0x0180
  }
    AttributeIDList[18] {
    DataElementSequence[18] {
      0b00110 0b101 0x10
      AttributeIDRange[5] {
        0b00001 0b010 0x00000001
      }
      AttributeID[3] {
        0b00001 0b001 0x000C
      }
      AttributeIDRange[5] {
        0b00001 0b010 0x01000102
      }
      AttributeID[3] {
        0b00001 0b001 0x0301
      }
    }
  }
  ContinuationState[9] {
    /* same 8 bytes of continuation state */
    /* received in part 2 */
    0x08 0xzzzzzzzzzzzzzzzz
  }
}

Part 4 -- Sent from SDP server to SDP client

SdpSDP_ServiceSearchAttributeResponse[115] {
  PDUID[1] {
    0x07
  }
  TransactionID[2] {
    0xwwww
  }
  ParameterLength[2] {
    0x006E
  }
  AttributeListByteCount[2] {
    0x006B
  }
  AttributeLists[107] {
    /* Continuing the data element sequence of */
    /* attribute lists begun in Part 2. */
      DataElementSequence[107] {
        0b00110 0b101 0x69
        Attribute[8] {
          AttributeID[3] {
            0b00001 0b001 0x0000
          }
          AttributeValue[5] {
            /* service record handle */
            0b00001 0b010 0xffffffff
```

```
          }
        }
        Attribute[10] {
          AttributeID[3] {
            0b00001 0b001 0x0001
          }
          AttributeValue[7] {
            DataElementSequence[7] {
              0b00110 0b101 0x05
              UUID[5] {
                /* SynchronisationServiceClassID */
                0b00011 0b010 0xssssssss
              }
            }
          }
        }
        Attribute[35] {
          AttributeID[3] {
            0b00001 0b001 0x000C
          }
          AttributeValue[32] {
            /* IconURL; '*' replaced by client application */
            0b01000 0b101 0x1E
            "http://DevManufacturer/icons/*"
          }
        }
        Attribute[18] {
          AttributeID[3] {
            0b00001 0b001 0x0100
          }
          AttributeValue[15] {
            /* service name */
            0b00100 0b101 0x0D
            "Calendar Sync"
          }
        }
        Attribute[29] {
          AttributeID[3] {
            0b00001 0b001 0x0102
          }
          AttributeValue[26] {
            /* service provider */
            0b00100 0b101 0x18
            "Device Manufacturer Inc."
          }
        }
        Attribute[5] {
          AttributeID[3] {
            0b00001 0b001 0x0301
          }
          AttributeValue[2] {
            /* Supported Data Store 'calendar' */
            0b00001 0b000 0x03
          }
        }
      }
    /* This completes the data element sequence */
```

```
    /* of attribute lists begun in Part 2.
  }
  ContinuationState[1] {
    /* no continuation state */
    0x00
  }
}
```

Core System Package [Host volume]
Part C

GENERIC ACCESS PROFILE

This profile defines the generic procedures related to discovery of Bluetooth devices (idle mode procedures) and link management aspects of connecting to Bluetooth devices (connecting mode procedures). It also defines procedures related to use of different security levels. In addition, this profile includes common format requirements for parameters accessible on the user interface level.

CONTENTS

1 Introduction 179
1.1 Scope 179
1.2 Symbols and conventions 179
1.2.1 Requirement status symbols 179
1.2.2 Signaling diagram conventions 180
1.2.3 Notation for timers and counters 180
2 Profile overview 181
2.1 Profile stack 181
2.2 Configurations and roles 181
2.3 User requirements and scenarios 182
2.4 Profile fundamentals 183
2.5 Conformance 183
3 User interface aspects 185
3.1 The user interface level 185
3.2 Representation of Bluetooth parameters 185
3.2.1 Bluetooth device address (BD_ADDR) 185
3.2.1.1 Definition 185
3.2.1.2 Term on user interface level 185
3.2.1.3 Representation 185
3.2.2 Bluetooth device name (the user-friendly name) 185
3.2.2.1 Definition 185
3.2.2.2 Term on user interface level 186
3.2.2.3 Representation 186
3.2.3 Bluetooth passkey (Bluetooth PIN) 186
3.2.3.1 Definition 186
3.2.3.2 Terms at user interface level 186
3.2.3.3 Representation 186
3.2.4 Class of Device 187
3.2.4.1 Definition 187
3.2.4.2 Term on user interface level 187
3.2.4.3 Representation 187
3.3 Pairing 188
4 Modes 189
4.1 Discoverability modes 189
4.1.1 Non-discoverable mode 190
4.1.1.1 Definition 190
4.1.1.2 Term on UI-level 190
4.1.2 Limited discoverable mode 190
4.1.2.1 Definition 190

4.1.2.2 Conditions 191
4.1.2.3 Term on UI-level 191
4.1.3 General discoverable mode 191
4.1.3.1 Definition 191
4.1.3.2 Conditions 192
4.1.3.3 Term on UI-level 192
4.2 Connectability modes 193
4.2.1 Non-connectable mode 193
4.2.1.1 Definition 193
4.2.1.2 Term on UI-level 193
4.2.2 Connectable mode 193
4.2.2.1 Definition 193
4.2.2.2 Term on UI-level 194
4.3 Pairing modes 195
4.3.1 Non-pairable mode 195
4.3.1.1 Definition 195
4.3.1.2 Term on UI-level 195
4.3.2 Pairable mode 195
4.3.2.1 Definition 195
4.3.2.2 Term on UI-level 195
5 Security aspects 197
5.1 Authentication 197
5.1.1 Purpose 197
5.1.2 Term on UI level 197
5.1.3 Procedure 198
5.1.4 Conditions 198
5.2 Security modes 198
5.2.1 Security mode 1 (non-secure) 200
5.2.2 Security mode 2 (service level enforced security) 200
5.2.3 Security modes 3 (link level enforced security) 200
6 Idle mode procedures 201
6.1 General inquiry 201
6.1.1 Purpose 201
6.1.2 Term on UI level 201
6.1.3 Description 202
6.1.4 Conditions 202
6.2 Limited inquiry 202
6.2.1 Purpose 202
6.2.2 Term on UI level 203
6.2.3 Description 203
6.2.4 Conditions 203

6.3 Name discovery 204
6.3.1 Purpose 204
6.3.2 Term on UI level 204
6.3.3 Description 204
6.3.3.1 Name request 204
6.3.3.2 Name discovery 204
6.3.4 Conditions 205
6.4 Device discovery 205
6.4.1 Purpose 205
6.4.2 Term on UI level 205
6.4.3 Description 206
6.4.4 Conditions 206
6.5 Bonding 206
6.5.1 Purpose 206
6.5.2 Term on UI level 206
6.5.3 Description 207
6.5.3.1 General bonding 207
6.5.3.2 Dedicated bonding 208
6.5.4 Conditions 208
7 Establishment procedures 209
7.1 Link establishment 209
7.1.1 Purpose 209
7.1.2 Term on UI level 209
7.1.3 Description 210
7.1.3.1 B in security mode 1 or 2 210
7.1.3.2 B in security mode 3 211
7.1.4 Conditions 211
7.2 Channel establishment 212
7.2.1 Purpose 212
7.2.2 Term on UI level 212
7.2.3 Description 212
7.2.3.1 B in security mode 2 213
7.2.3.2 B in security mode 1 or 3 213
7.2.4 Conditions 213

7.3 Connection establishment....214
7.3.1 Purpose....214
7.3.2 Term on UI level....214
7.3.3 Description....214
7.3.3.1 B in security mode 2....214
7.3.3.2 B in security mode 1 or 3....215
7.3.4 Conditions....215
7.4 Establishment of additional connection....215

8 Definitions....217
8.1 General definitions....217
8.2 Connection-related definitions....217
8.3 Device-related definitions....218
8.4 Procedure-related definitions....219
8.5 Security-related definitions....219

9 Appendix A (Normative): Timers and constants....221

10 Appendix B (Informative): Information flows of related procedures....223

11 References....227

FOREWORD

Interoperability between devices from different manufacturers is provided for a specific service and use case, if the devices conform to a Bluetooth SIG-defined profile specification. A profile defines a selection of messages and procedures (generally termed *capabilities*) from the Bluetooth SIG specifications and gives a description of the air interface for specified service(s) and use case(s).

All defined features are process-mandatory. This means that, if a feature is used, it is used in a specified manner. Whether the provision of a feature is mandatory or optional is stated separately for both sides of the Bluetooth air interface.

1 INTRODUCTION

1.1 SCOPE

The purpose of the Generic Access Profile is:

To introduce definitions, recommendations and common requirements related to modes and access procedures that are to be used by transport and application profiles.

To describe how devices are to behave in standby and connecting states in order to guarantee that links and channels always can be established between Bluetooth devices, and that multi-profile operation is possible. Special focus is put on discovery, link establishment and security procedures.

To state requirements on user interface aspects, mainly coding schemes and names of procedures and parameters, that are needed to guarantee a satisfactory user experience.

1.2 SYMBOLS AND CONVENTIONS

1.2.1 Requirement status symbols

In this document (especially in the profile requirements tables), the following symbols are used:

‘M’ for mandatory to support (used for capabilities that shall be used in the profile);

’O’ for optional to support (used for capabilities that can be used in the profile);

‘C’ for conditional support (used for capabilities that shall be used in case a certain other capability is supported);

‘X’ for excluded (used for capabilities that may be supported by the unit but shall never be used in the profile);

’N/A’ for not applicable (in the given context it is impossible to use this capability).

Some excluded capabilities are capabilities that, according to the relevant Bluetooth specification, are mandatory. These are features that may degrade operation of devices following this profile. Therefore, these features shall never be activated while a unit is operating as a unit within this profile.

In this specification, the word *shall* is used for mandatory requirements, the word *should* is used to express recommendations and the word *may* is used for options.

1.2.2 Signaling diagram conventions

The following arrows are used in diagrams describing procedures
:

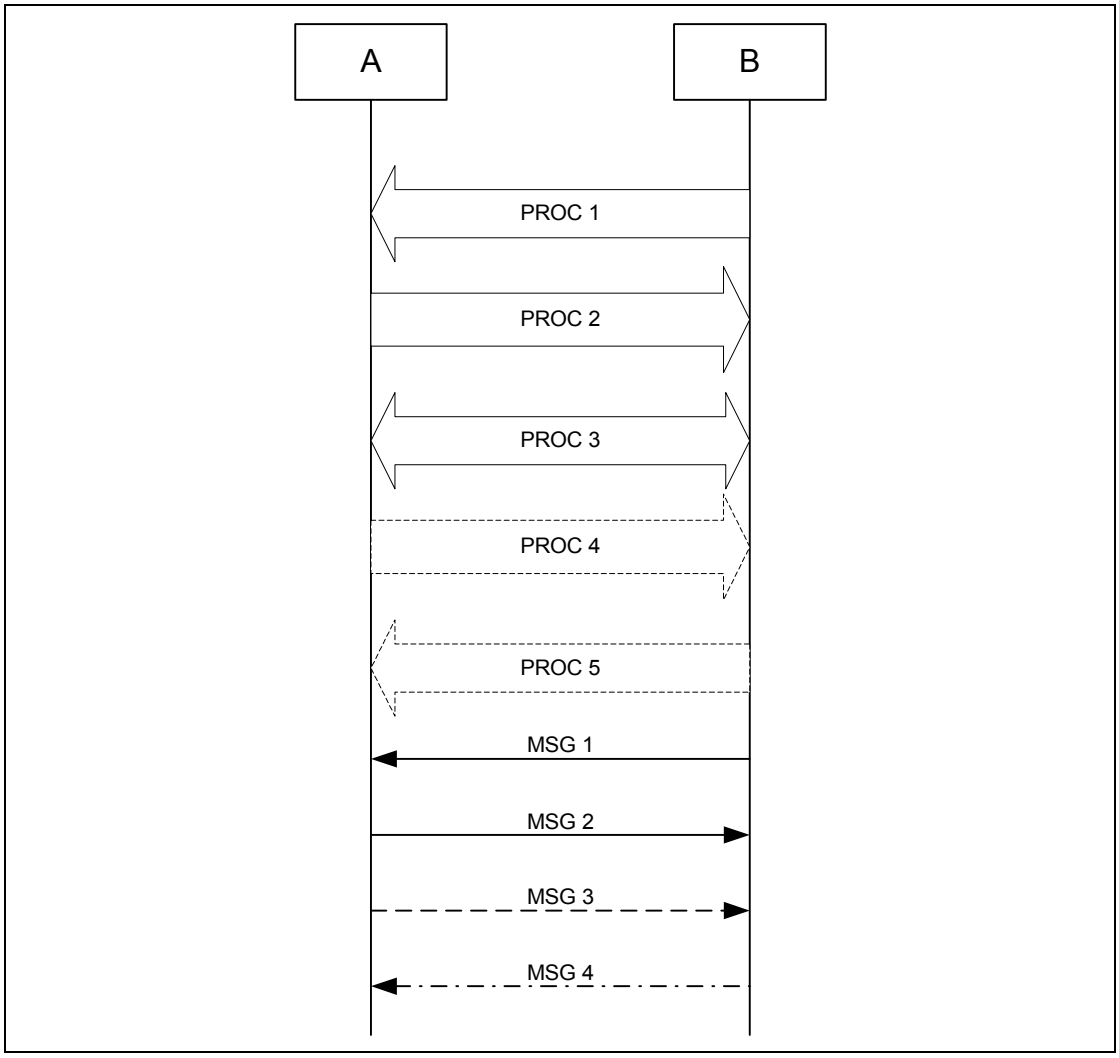

Figure 1.1: Arrows used in signaling diagrams

In the table above, the following cases are shown: PROC1 is a sub-procedure initiated by B. PROC2 is a sub-procedure initiated by A. PROC3 is a sub-procedure where the initiating side is undefined (may be both A or B). Dashed arrows denote optional steps. PROC4 indicates an optional sub-procedure initiated by A, and PROC5 indicates an optional sub-procedure initiated by B.

MSG1 is a message sent from B to A. MSG2 is a message sent from A to B. MSG3 indicates an optional message from A to B, and MSG4 indicates a conditional message from B to A.

1.2.3 Notation for timers and counters

Timers are introduced specific to this profile. To distinguish them from timers used in the Bluetooth protocol specifications and other profiles, these timers are named in the following format: ’T_{GAP}*(nnn)*’.

2 PROFILE OVERVIEW

2.1 PROFILE STACK

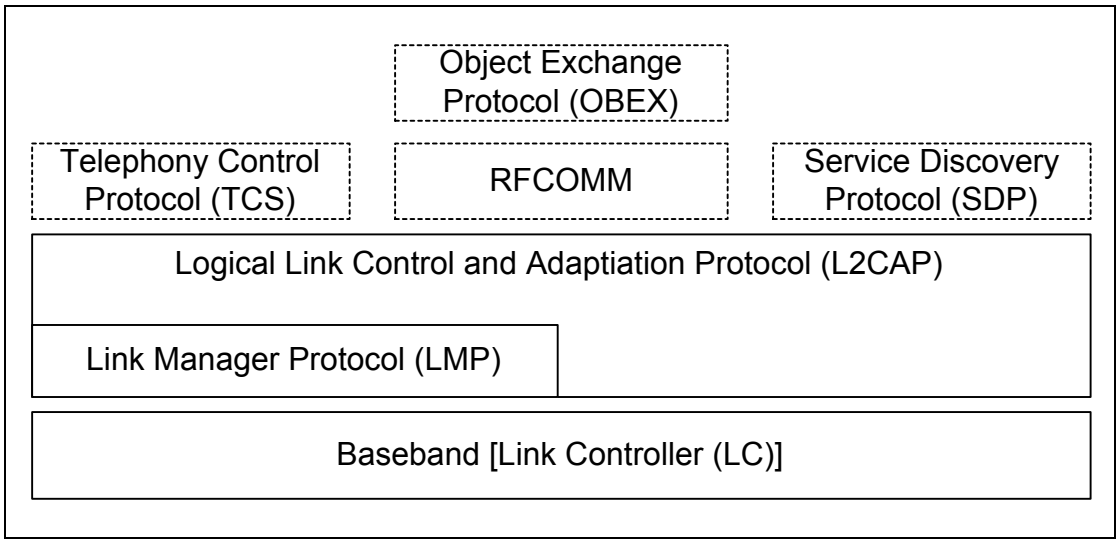

Figure 2.1: Profile stack covered by this profile.

The main purpose of this profile is to describe the use of the lower layers of the Bluetooth protocol stack (LC and LMP). To describe security related alternatives, also higher layers (L2CAP, RFCOMM and OBEX) are included.

2.2 CONFIGURATIONS AND ROLES

For the descriptions in this profile of the roles that the two devices involved in a Bluetooth communication can take, the generic notation of the A-party (the *paging device* in case of link establishment, or *initiator* in case of another procedure on an established link) and the B-party (*paged device* or *acceptor*) is used. The A-party is the one that, for a given procedure, initiates the establishment of the physical link or initiates a transaction on an existing link.

This profile handles the procedures between two devices related to discovery and connecting (link and connection establishment) for the case where none of the two devices has any link established as well as the case where (at least) one device has a link established (possibly to a third device) before starting the described procedure.

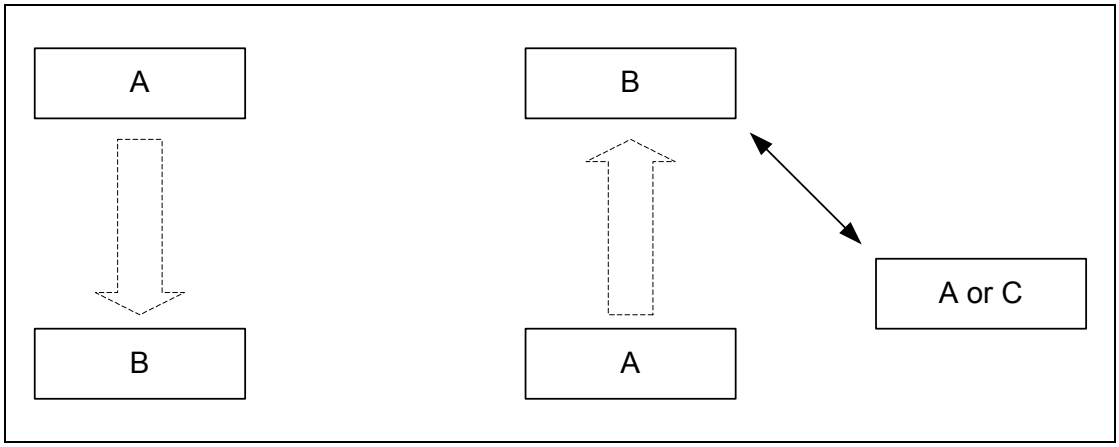

Figure 2.2: This profile covers procedures initiated by one device (A) towards another device (B) that may or may not have an existing Bluetooth link active.

The initiator and the acceptor generally operate the generic procedures according to this profile or another profile referring to this profile. If the acceptor operates according to several profiles simultaneously, this profile describes generic mechanisms for how to handle this.

2.3 USER REQUIREMENTS AND SCENARIOS

The Bluetooth user should in principle be able to connect a Bluetooth device to any other Bluetooth device. Even if the two connected devices don't share any common application, it should be possible for the user to find this out using basic Bluetooth capabilities. When the two devices do share the same application but are from different manufacturers, the ability to connect them should not be blocked just because manufacturers choose to call basic Bluetooth capabilities by different names on the user interface level or implement basic procedures to be executed in different orders.

2.4 PROFILE FUNDAMENTALS

This profile states the requirements on names, values and coding schemes used for names of parameters and procedures experienced on the user interface level.

This profile defines modes of operation that are not service- or profile-specific, but that are generic and can be used by profiles referring to this profile, and by devices implementing multiple profiles.

This profile defines the general procedures that can be used for discovering identities, names and basic capabilities of other Bluetooth devices that are in a mode where they can be discoverable. Only procedures where no channel or connection establishment is used are specified.

This profile defines the general procedure for how to create bonds (i.e. dedicated exchange of link keys) between Bluetooth devices.

This profile describes the general procedures that can be used for establishing connections to other Bluetooth devices that are in mode that allows them to accept connections and service requests.

2.5 CONFORMANCE

Bluetooth devices that do not conform to any other Bluetooth profile shall conform to this profile to ensure basic interoperability.

Bluetooth devices that conform to another Bluetooth profile may use adaptations of the generic procedures as specified by that other profile. They shall, however, be compatible with devices compliant to this profile at least on the level of the supported generic procedures.

If conformance to this profile is claimed, all capabilities indicated mandatory for this profile shall be supported in the specified manner (process-mandatory). This also applies for all optional and conditional capabilities for which support is indicated. All mandatory capabilities, and optional and conditional capabilities for which support is indicated, are subject to verification as part of the Bluetooth certification program.

3 USER INTERFACE ASPECTS

3.1 THE USER INTERFACE LEVEL

In the context of this specification, the user interface level refers to places (such as displays, dialog boxes, manuals, packaging, advertising, etc.) where users of Bluetooth devices encounters names, values and numerical representation of Bluetooth terminology and parameters.

This profile specifies the generic terms that should be used on the user interface level.

3.2 REPRESENTATION OF BLUETOOTH PARAMETERS

3.2.1 Bluetooth device address (BD_ADDR)

3.2.1.1 Definition

BD_ADDR is the address used by a Bluetooth device as defined in [1]. It is received from a remote device during the device discovery procedure.

3.2.1.2 Term on user interface level

When the Bluetooth address is referred to on UI level, the term ’Bluetooth Device Address’ should be used.

3.2.1.3 Representation

On BB level the BD_ADDR is represented as 48 bits [1].

On the UI level the Bluetooth address shall be represented as 12 hexadecimal characters, possibly divided into sub-parts separated by’:’.
(E.g., ’000C3E3A4B69’ or ’00:0C:3E:3A:4B:69’.) At UI level, any number shall have the MSB -> LSB (from left to right) ’natural’ ordering (e.g., the number ’16’ shall be shown as ’0x10’).

3.2.2 Bluetooth device name (the user-friendly name)

3.2.2.1 Definition

The Bluetooth device name is the user-friendly name that a Bluetooth device presents itself with. It is a character string returned in LMP_name_res as response to a LMP_name_req.

3.2.2.2 Term on user interface level

When the Bluetooth device name is referred to on UI level, the term 'Bluetooth Device Name' should be used.

3.2.2.3 Representation

The Bluetooth device name can be up to 248 bytes maximum according to [2]. It shall be encoded according to UTF-8 (i.e. name entered on UI level may be down to 82 characters outside the Unicode range 0x00-0x7F are used).

A device can not expect that a general remote device is able to handle more than the first 40 characters of the Bluetooth device name. If a remote device has limited display capabilities, it may use only the first 20 characters.

3.2.3 Bluetooth passkey (Bluetooth PIN)

3.2.3.1 Definition

The Bluetooth PIN is used to authenticate two Bluetooth devices (that have not previously exchanged link keys) to each other and create a trusted relationship between them. The PIN is used in the pairing procedure (see Section 10.2 on page 224) to generate the initial link key that is used for further authentication.

The PIN may be entered on UI level but may also be stored in the device; e.g. in the case of a device without sufficient MMI for entering and displaying digits.

3.2.3.2 Terms at user interface level

When the Bluetooth PIN is referred to on UI level, the term 'Bluetooth Passkey' should be used.

3.2.3.3 Representation

The Bluetooth PIN has different representations on different levels. PINBB is used on baseband level, and PINUI is used on user interface level.

PINBB is the PIN used by [1] for calculating the initialization key during the pairing procedure. PINUI is the character representation of the PIN that is entered on UI level. The transformation from PINUI to PINBB shall be according to UTF-8 and decimal digits shall be within the Unicode range 0x00 - 0x7F.

According to [1], PINBB can be 128 bits (16 bytes). I.e. if a device supports entry of characters outside the Unicode range 0x00 - 0x7F, the maximum number of characters in the PINUI may be less than 16.

Examples:

User-entered code	Corresponding PIN_{BB}[0..length-1] (value as a sequence of octets in hexadecimal notation)
'0123'	length = 4, value = 0x30 0x31 0x32 0x33
'Ärlich'	length = 7, value = 0xC3 0x84 0x72 0x6C 0x69 0x63 0x68

All Bluetooth devices that support the bonding procedure and support PIN handling on UI level shall support UI level handling of PINs consisting of decimal digits. In addition, devices may support UI level handling of PINs consisting of general characters.

If a device has a fixed PIN (i.e. PIN is stored in the device and cannot be entered on UI level during pairing), the PIN shall be defined using decimal digits. A device that is expected to pair with a remote device that has restricted UI capabilities should ensure that the PIN can be entered on UI level as decimal digits.

3.2.4 Class of Device

3.2.4.1 Definition

Class of device is a parameter received during the device discovery procedure, indicating the type of device and which types of service that are supported.

3.2.4.2 Term on user interface level

The information within the Class of Device parameter should be referred to as 'Bluetooth Device Class' (i.e. the major and minor device class fields) and 'Bluetooth Service Type' (i.e. the service class field). The terms for the defined Bluetooth Device Types and Bluetooth Service Types are defined in [11].

When using a mix of information found in the Bluetooth Device Class and the Bluetooth Service Type, the term 'Bluetooth Device Type' should be used.

3.2.4.3 Representation

The Class of device is a bit field and is defined in [11]. The UI-level representation of the information in the Class of device is implementation specific.

3.3 PAIRING

Two procedures are defined that make use of the pairing procedure defined on LMP level (LMP-pairing, see Section 10.2 on page 224). Either the user initiates the bonding procedure and enters the passkey with the explicit purpose of creating a bond (and maybe also a secure relationship) between two Bluetooth devices, or the user is requested to enter the passkey during the establishment procedure since the devices did not share a common link key beforehand. In the first case, the user is said to perform ’bonding (with entering of passkey)’ and in the second case the user is said to ’authenticate using the passkey’.

4 MODES

Procedure	Ref.	Support
Discoverability modes:	4.1	
Non-discoverable mode		C1
Limited discoverable mode		O
General discoverable mode		O
Connectability modes:	4.1.3.3	
Non-connectable mode		O
Connectable mode		M
Pairing modes:	4.2.2.2	
Non-pairable mode		O
Pairable mode		C2
C1: If limited discoverable mode is supported, non-discoverable mode is mandatory, otherwise optional.		
C2: If the bonding procedure is supported, support for pairable mode is mandatory, otherwise optional.		

Table 4.1: Conformance requirements related to modes defined in this section

4.1 DISCOVERABILITY MODES

With respect to inquiry, a Bluetooth device shall be either in non-discoverable mode or in a discoverable mode. (The device shall be in one, and only one, discoverability mode at a time.) The two discoverable modes defined here are called limited discoverable mode and general discoverable mode. Inquiry is defined in [1].

When a Bluetooth device is in non-discoverable mode it does not respond to inquiry.

A Bluetooth device is said to be made discoverable, or set into a discoverable mode, when it is in limited discoverable mode or in general discoverable mode. Even when a Bluetooth device is made discoverable it may be unable to respond to inquiry due to other baseband activity [1]. A Bluetooth device that does not respond to inquiry for any of these two reasons is called a silent device.

After being made discoverable, the Bluetooth device shall be discoverable for at least $T_{GAP}(103)$.

The speed of discovery is dependent on the configuration of the inquiry scan interval and inquiry scan type of the Bluetooth device. The Host is able to configure these parameters based on trade-offs between power consumption, bandwidth and the desired speed of discovery.

4.1.1 Non-discoverable mode

4.1.1.1 Definition

When a Bluetooth device is in non-discoverable mode, it shall never enter the INQUIRY_RESPONSE state.

4.1.1.2 Term on UI-level

Bluetooth device is ’non-discoverable’ or in ’non-discoverable mode’.

4.1.2 Limited discoverable mode

4.1.2.1 Definition

The limited discoverable mode should be used by devices that need to be discoverable only for a limited period of time, during temporary conditions or for a specific event. The purpose is to respond to a device that makes a limited inquiry (inquiry using the LIAC).

A Bluetooth device should not be in limited discoverable mode for more than $T_{GAP}(104)$. The scanning for the limited inquiry access code can be done either in parallel or in sequence with the scanning of the general inquiry access code. When in limited discoverable mode, one of the following options shall be used.

- *Parallel scanning*

  When a Bluetooth device is in limited discoverable mode and when discovery speed is more important than power consumption or bandwidth, it is recommended that the Bluetooth device enter the INQUIRY_SCAN state at least every $T_{GAP}(105)$ and that Interlaced Inquiry scan is used.

  If, however, power consumption or bandwidth is important, but not critical, it is recommended that the Bluetooth device enter the INQUIRY_SCAN state at least every $T_{GAP}(102)$ and Interlaced Inquiry scan is used.

  When power consumption or bandwidth is critical it is recommended that the Bluetooth device enter the INQUIRY_SCAN state at least every $T_{GAP}(102)$ and non-Interlaced Inquiry scan is used.

  In all cases the Bluetooth device shall enter the INQUIRY_SCAN state at least once in $T_{GAP}(102)$ and scan for the GIAC and the LIAC for at least $T_{GAP}(101)$

When either a SCO or eSCO link is in operation, it is recommended to use interlaced scan to significantly decrease the discoverability time.

- *Sequential scanning*

  When a Bluetooth device is in limited discoverable mode, it shall enter the INQUIRY_SCAN state at least once in $T_{GAP}(102)$ and scan for the GIAC for at least $T_{GAP}(101)$ and enter the INQUIRY_SCAN state more often than once in $T_{GAP}(102)$ and scan for the LIAC for at least $T_{GAP}(101)$.

  If an inquiry message is received when in limited discoverable mode, the entry into the INQUIRY_RESPONSE state takes precedence over the next entries into INQUIRY_SCAN state until the inquiry response is completed.

4.1.2.2 Conditions

When a device is in limited discoverable mode it shall set bit no 13 in the Major Service Class part of the Class of Device/Service field [11].

4.1.2.3 Term on UI-level

Bluetooth device is ’discoverable’ or in ’discoverable mode’.

4.1.3 General discoverable mode

4.1.3.1 Definition

The general discoverable mode shall be used by devices that need to be discoverable continuously or for no specific condition. The purpose is to respond to a device that makes a general inquiry (inquiry using the GIAC).

4.1.3.2 Conditions

When a Bluetooth device is in general discoverable mode and when discovery speed is more important than power consumption or bandwidth, it is recommended that the Bluetooth device enter the INQUIRY_SCAN state at least every $T_{GAP}(105)$ and that Interlaced Inquiry scan is used.

If, however, power consumption or bandwidth is important, but not critical, it is recommended that the Bluetooth device enter the INQUIRY_SCAN state at least every $T_{GAP}(102)$ and Interlaced Inquiry scan is used.

When power consumption or bandwidth is critical it is recommended that the Bluetooth device enter the INQUIRY_SCAN state at least every $T_{GAP}(102)$ and Non-interlaced Inquiry scan is used.

In all cases the Bluetooth device shall enter the INQUIRY_SCAN state at least once in $T_{GAP}(102)$ and scan for the GIAC for at least $T_{GAP}(101)$.

When either a SCO or eSCO link is in operation, it is recommended to use interlaced scan to significantly decrease the discoverability time.

A device in general discoverable mode shall not respond to a LIAC inquiry.

4.1.3.3 Term on UI-level

Bluetooth device is ’discoverable’ or in ’discoverable mode’.

4.2 CONNECTABILITY MODES

With respect to paging, a Bluetooth device shall be either in non-connectable mode or connectable mode. Paging is defined in [1].

When a Bluetooth device is in non-connectable mode it does not respond to paging. When a Bluetooth device is in connectable mode it responds to paging.

The speed of connections is dependent on the configuration of the page scan interval and page scan type of the Bluetooth device. The Host is able to configure these parameters based on trade-offs between power consumption, bandwidth and the desired speed of connection.

4.2.1 Non-connectable mode

4.2.1.1 Definition

When a Bluetooth device is in non-connectable mode it shall never enter the PAGE_SCAN state.

4.2.1.2 Term on UI-level

Bluetooth device is ’non-connectable’ or in ’non-connectable mode’.

4.2.2 Connectable mode

4.2.2.1 Definition

When a Bluetooth device is in connectable mode it shall periodically enter the PAGE_SCAN state. The device makes page scan using the Bluetooth device address, BD_ADDR. Connection speed is a trade-off between power consumption / available bandwidth and speed. The Bluetooth Host is able to make these trade-offs using the Page Scan interval, Page Scan window, and Interlaced Scan parameters.

R0 page scanning should be used when connection speeds are critically important and when the paging device has a very good estimate of the Bluetooth clock. Under these conditions it is possible for paging to complete within two times the page scan window. Because the page scan interval is equal to the page scan window it is not possible for any other traffic to go over the Bluetooth link when using R0 page scanning. In R0 page scanning it is not possible to use interlaced scan. R0 page scanning is the highest power consumption mode of operation.

When connection times are critical but the other device either does not have an estimate of the Bluetooth clock or when the estimate is possibly out of date, it is better to use R1 page scanning with a very short page scan interval,

T_{GAP}(106), and Interlaced scan. This configuration is also useful to achieve nearly the same connection speeds as R0 page scanning but using less power consumption and leaving bandwidth available for other connections. Under these circumstances it is possible for paging to complete within T_{GAP}(106). In this case the Bluetooth device shall page scan for at least T_{GAP}(101).

When connection times are important but not critical enough to sacrifice significant bandwidth and/or power consumption it is recommended to use either T_{GAP}(107) or T_{GAP}(108) for the scanning interval. Using Interlaced scan will reduce the connection time by half but may use twice the power consumption. Under these circumstances it is possible for paging to complete within one or two times the page scanning interval depending on whether Interlaced Scan is used. In this case the Bluetooth device shall page scan for at least T_{GAP}(101).

In all cases the Bluetooth device shall enter the PAGE_SCAN state at least once in T_{GAP}(102) and scan for at least T_{GAP}(101).

The page scan interval, page scan window size and scan type for the six scenarios are described in the following table:

Scenario	**Page Scan Interval**	**Page Scan Window**	**Scan Type**
R0 (1.28s)	T_{GAP}(107)	T_{GAP}(107)	Normal scan
Fast R1 (100ms)	T_{GAP}(106)	T_{GAP}(101)	Interlaced scan
Medium R1 (1.28s)	T_{GAP}(107)	T_{GAP}(101)	Interlaced scan
Slow R1 (1.28s)	T_{GAP}(107)	T_{GAP}(101)	Normal scan
Fast R2 (2.56s)	T_{GAP}(108)	T_{GAP}(101)	Interlaced scan
Slow R2 (2.56s)	T_{GAP}(108)	T_{GAP}(101)	Normal scan

Table 4.2: Page scan parameters for connection speed scenarios

When either a SCO or eSCO link is in operation, it is recommended to use interlaced scan to significantly decrease the connection time.

4.2.2.2 Term on UI-level

Bluetooth device is ’connectable’ or in ’connectable mode’.

4.3 PAIRING MODES

With respect to pairing, a Bluetooth device shall be either in non-pairable mode or in pairable mode. In pairable mode the Bluetooth device accepts paring – i.e. creation of bonds – initiated by the remote device, and in non-pairable mode it does not. Pairing is defined in [1] and [2].

4.3.1 Non-pairable mode

4.3.1.1 Definition

When a Bluetooth device is in non-pairable mode it shall respond to a received LMP_in_rand with LMP_not_accepted with the reason *pairing not allowed*.

4.3.1.2 Term on UI-level

Bluetooth device is ’non-bondable’ or in ’non-bondable mode’ or “does not accept bonding”.

4.3.2 Pairable mode

4.3.2.1 Definition

When a Bluetooth device is in pairable mode it shall respond to a received LMP_in_rand with LMP_accepted (or with LMP_in_rand if it has a fixed PIN).

4.3.2.2 Term on UI-level

Bluetooth device is ’bondable’ or in ’bondable mode’ or “accepts bonding”.

5 SECURITY ASPECTS

	Procedure	Ref.	Support
1	Authentication	5.1	C1
2	Security modes	5.2	
	Security mode 1		O
	Security mode 2		C2
	Security mode 3		C2
C1: If security mode 1 is the only security mode that is supported, support for authentication is optional, otherwise mandatory. (Note: support for LMP-authentication and LMP-pairing is mandatory according [2] independent of which security mode that is used.)			
C2: If secure communication is supported, then support for at least one of Security mode 2 or Security mode 3 is mandatory.			

Table 5.1: Conformance requirements related to the generic authentication procedure and the security modes defined in this section

5.1 AUTHENTICATION

5.1.1 Purpose

The generic authentication procedure describes how the LMP-authentication and LMP-pairing procedures are used when authentication is initiated by one Bluetooth device towards another, depending on if a link key exists or not and if pairing is allowed or not.

5.1.2 Term on UI level

’Bluetooth authentication’.

5.1.3 Procedure

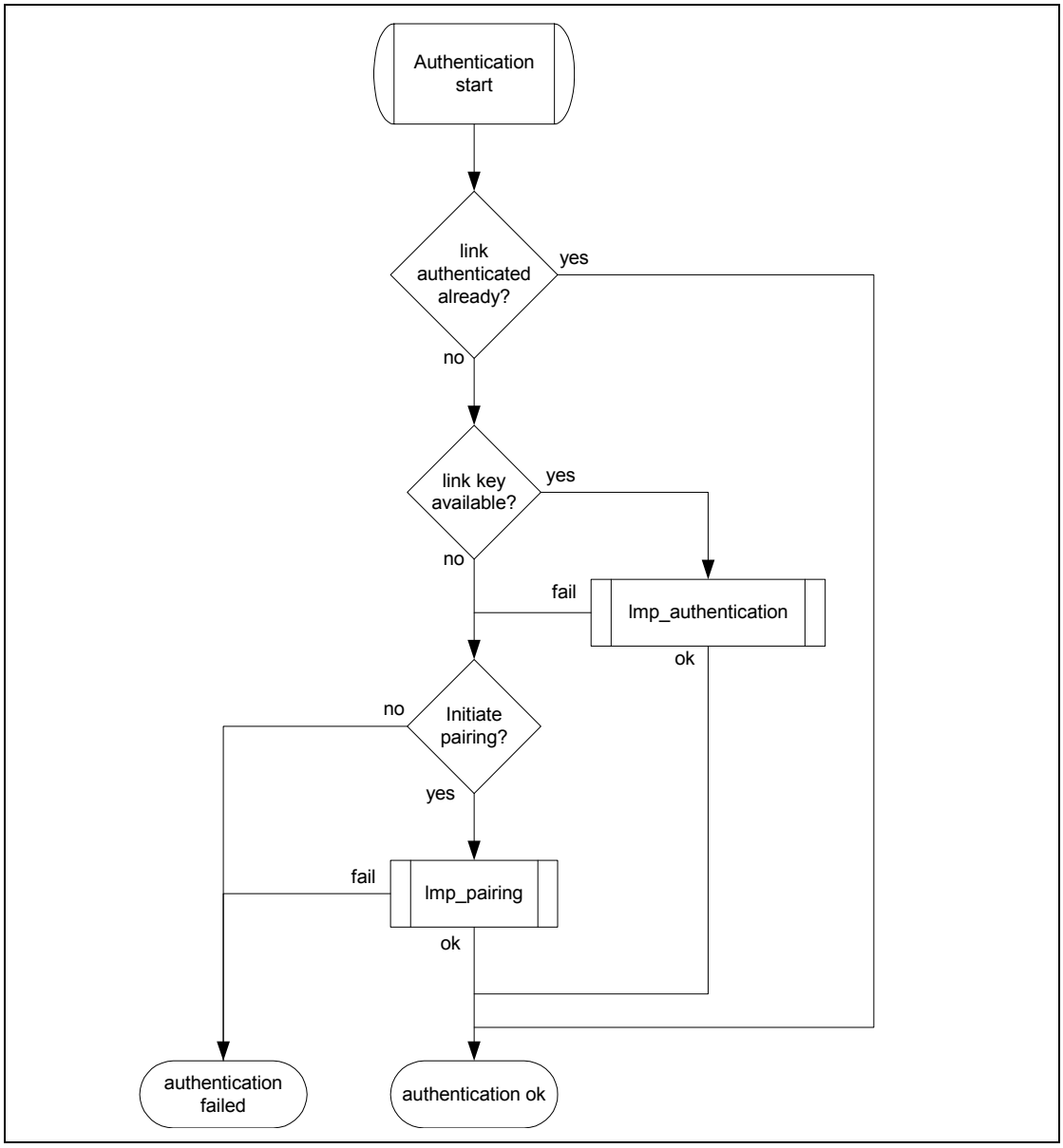

Figure 5.1: Definition of the generic authentication procedure.

5.1.4 Conditions

The device that initiates authentication has to be in security mode 2 or in security mode 3.

5.2 SECURITY MODES

The following flow chart describes where in the channel establishment procedures initiation of authentication takes place, depending on which security mode the Bluetooth device is in.

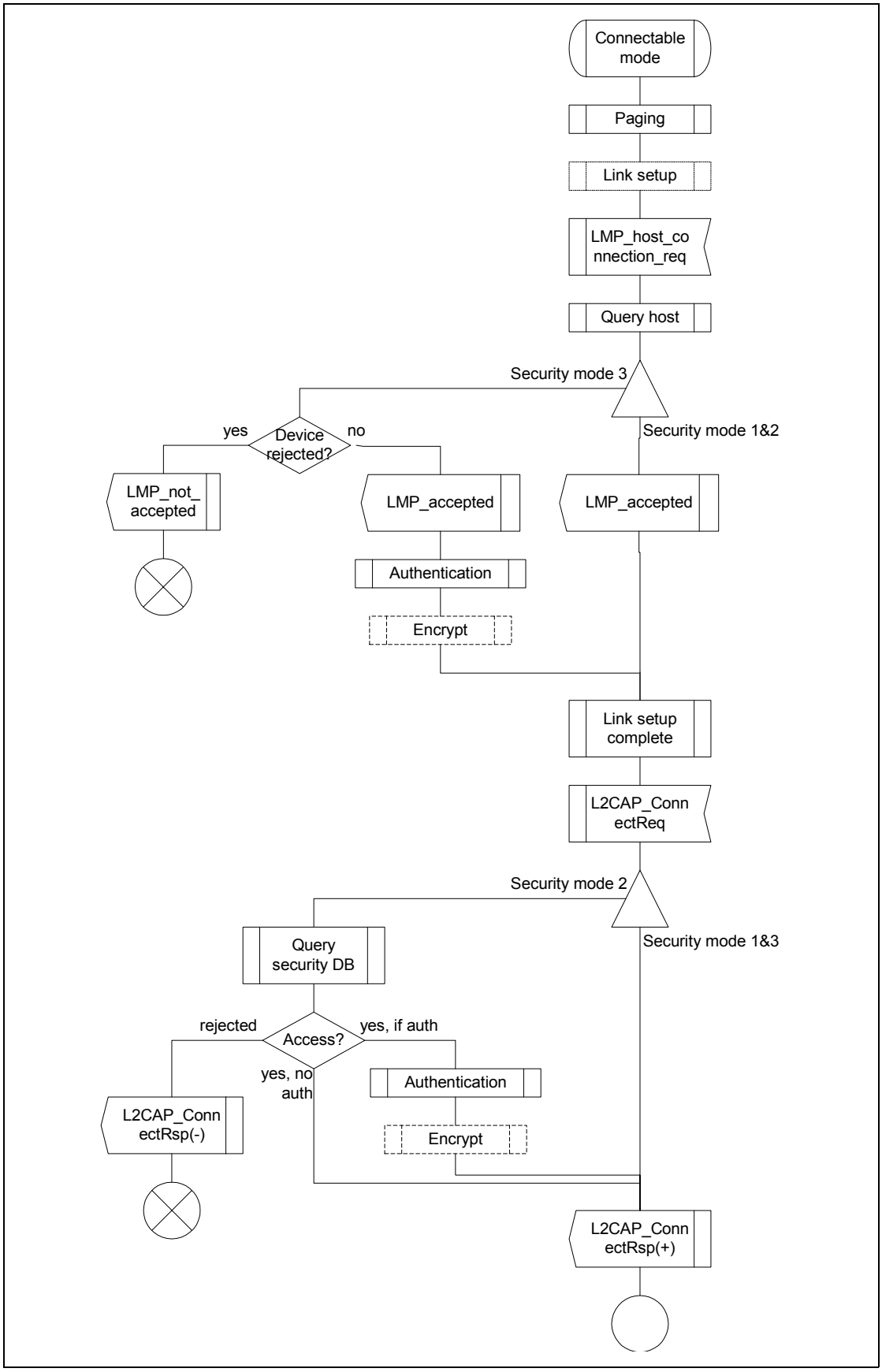

Figure 5.2: Illustration of channel establishment using different security modes.

When authentication is initiated towards a Bluetooth device, it shall act according to [2] and the current pairing mode, independent of which security mode it is in.

5.2.1 Security mode 1 (non-secure)

When a Bluetooth device is in security mode 1 it shall never initiate any security procedure (i.e., it shall never send LMP_au_rand, LMP_in_rand or LMP_encryption_mode_req).

5.2.2 Security mode 2 (service level enforced security)

When a Bluetooth device is in security mode 2 it shall not initiate any security procedure before a channel establishment request (L2CAP_ConnectReq) has been received or a channel establishment procedure has been initiated by itself. (The behavior of a device in security mode 2 is further described in [10].) Whether a security procedure is initiated or not depends on the security requirements of the requested channel or service.

A Bluetooth device in security mode 2 should classify the security requirements of its services using at least the following attributes:

- Authorization required;
- Authentication required;
- Encryption required.

Note: Security mode 1 can be considered (at least from a remote device point of view) as a special case of security mode 2 where no service has registered any security requirements.

5.2.3 Security modes 3 (link level enforced security)

When a Bluetooth device is in security mode 3 it shall initiate security procedures before it sends LMP_link_setup_complete. (The behavior of a device in security mode 3 is as described in [2].)

A Bluetooth device in security mode 3 may reject the host connection request (respond with LMP_not_accepted to the LMP_host_connection_req) based on settings in the host (e.g. only communication with pre-paired devices allowed).

6 IDLE MODE PROCEDURES

The inquiry and discovery procedures described here are applicable only to the device that initiates them (A). The requirements on the behavior of B is according to the modes specified in Section 4 on page 189 and to [2].

	Procedure	Ref.	Support
1	General inquiry	6.1	C1
2	Limited inquiry	6.2	C1
3	Name discovery	6.3	O
4	Device discovery	6.4	O
5	Bonding	6.5	O
C1: If initiation of bonding is supported, support for at least one inquiry procedure is mandatory, otherwise optional. (Note: support for LMP-pairing is mandatory [2].)			

6.1 GENERAL INQUIRY

6.1.1 Purpose

The purpose of the general inquiry procedure is to provide the initiator with the Bluetooth device address, clock, Class of Device and used page scan mode of general discoverable devices (i.e. devices that are in range with regard to the initiator and are set to scan for inquiry messages with the General Inquiry Access Code). Also devices in limited discoverable mode will be discovered using general inquiry.

The general inquiry should be used by devices that need to discover devices that are made discoverable continuously or for no specific condition.

6.1.2 Term on UI level

’Bluetooth Device Inquiry’.

6.1.3 Description

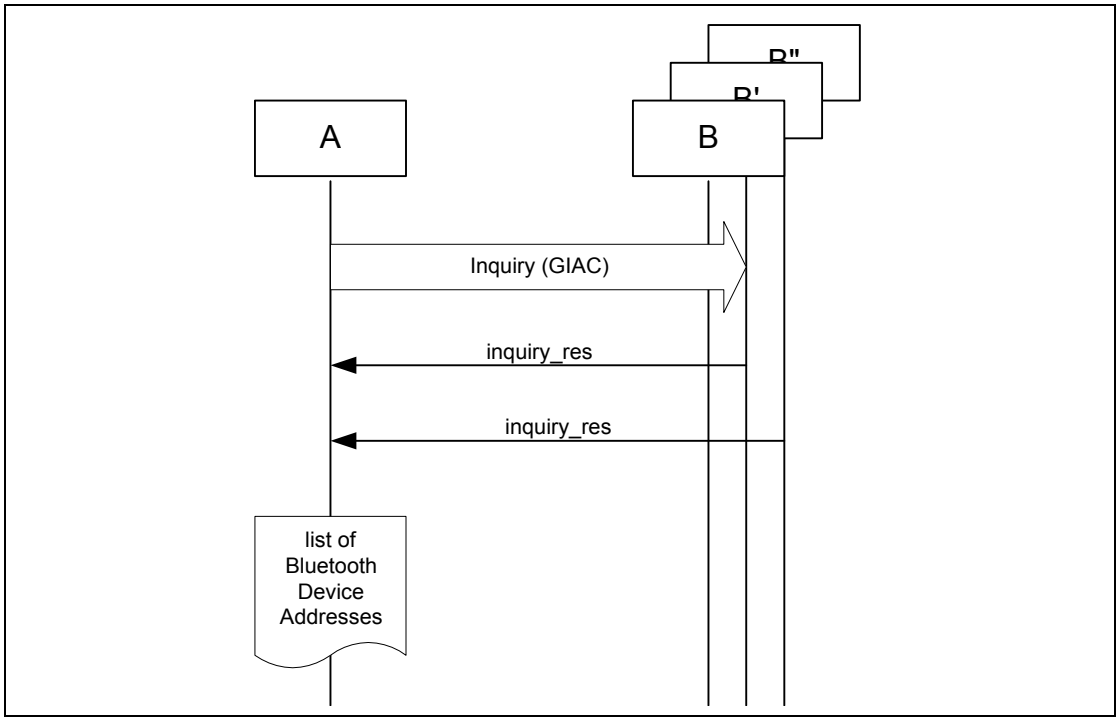

Figure 6.1: General inquiry ,where B is a device in non-discoverable mode, B´ is a device in limited discoverable mode and B" is a device in general discoverable mode. (Note that all discoverable devices are discovered using general inquiry, independent of which discoverable mode they are in.)

6.1.4 Conditions

When general inquiry is initiated by a Bluetooth device, the INQUIRY state shall last $T_{GAP}(100)$ or longer, unless the inquirer collects enough responses and determines to abort the INQUIRY state earlier. The Bluetooth device shall perform inquiry using the GIAC.

In order to receive inquiry response, the remote devices in range have to be made discoverable (limited or general).

6.2 LIMITED INQUIRY

6.2.1 Purpose

The purpose of the limited inquiry procedure is to provide the initiator with the Bluetooth device address, clock, Class of Device and used page scan mode of limited discoverable devices. The latter devices are devices that are in range with regard to the initiator, and may be set to scan for inquiry messages with the Limited Inquiry Access Code, in addition to scanning for inquiry messages with the General Inquiry Access Code.

The limited inquiry should be used by devices that need to discover devices that are made discoverable only for a limited period of time, during temporary

conditions or for a specific event. Since it is not guaranteed that the discoverable device scans for the LIAC, the initiating device may choose any inquiry procedure (general or limited). Even if the remote device that is to be discovered is expected to be made limited discoverable (e.g. when a dedicated bonding is to be performed), the limited inquiry should be done in sequence with a general inquiry in such a way that both inquiries are completed within the time the remote device is limited discoverable, i.e. at least $T_{GAP}(103)$.

6.2.2 Term on UI level

'Bluetooth Device Inquiry'.

6.2.3 Description

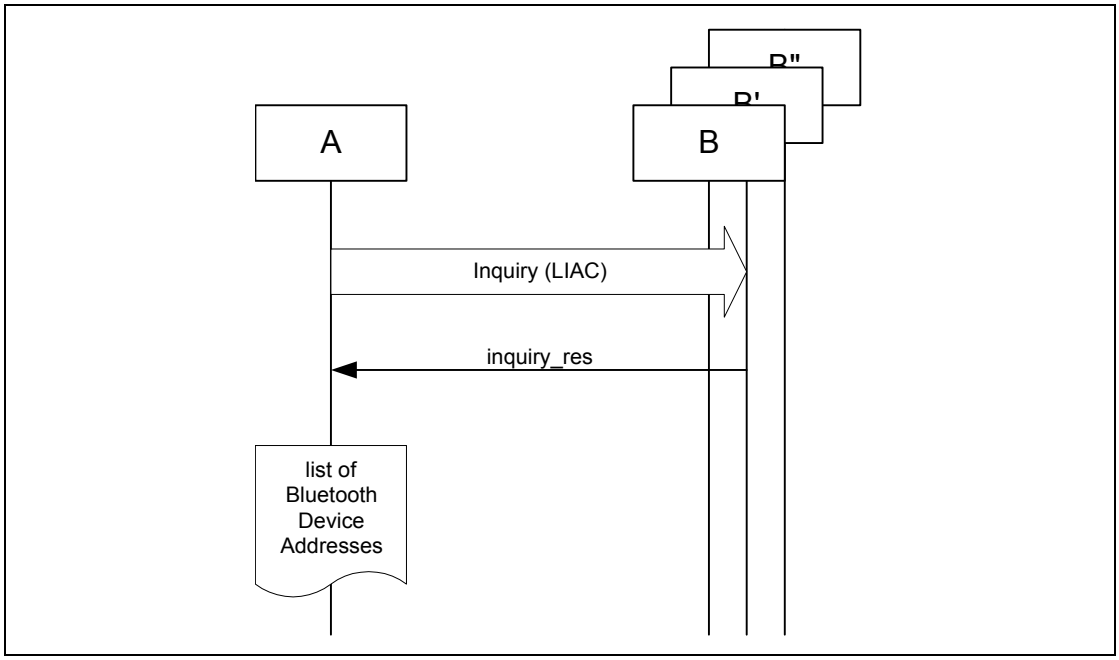

Figure 6.2: Limited inquiry where B is a device in non-discoverable mode, B' is a device in limited discoverable mode and B" is a device in general discoverable mode. (Note that only limited discoverable devices can be discovered using limited inquiry.)

6.2.4 Conditions

When limited inquiry is initiated by a Bluetooth device, the INQUIRY state shall last $T_{GAP}(100)$ or longer, unless the inquirer collects enough responses and determines to abort the INQUIRY state earlier. The Bluetooth device shall perform inquiry using the LIAC.

In order to receive inquiry response, the remote devices in range has to be made limited discoverable.

6.3 NAME DISCOVERY

6.3.1 Purpose

The purpose of name discovery is to provide the initiator with the Bluetooth Device Name of connectable devices (i.e. devices in range that will respond to paging).

6.3.2 Term on UI level

'Bluetooth Device Name Discovery'.

6.3.3 Description

6.3.3.1 Name request

Name request is the procedure for retrieving the Bluetooth Device Name from a connectable Bluetooth device. It is not necessary to perform the full link establishment procedure (see Section 7.1 on page 209) in order to just to get the name of another device.

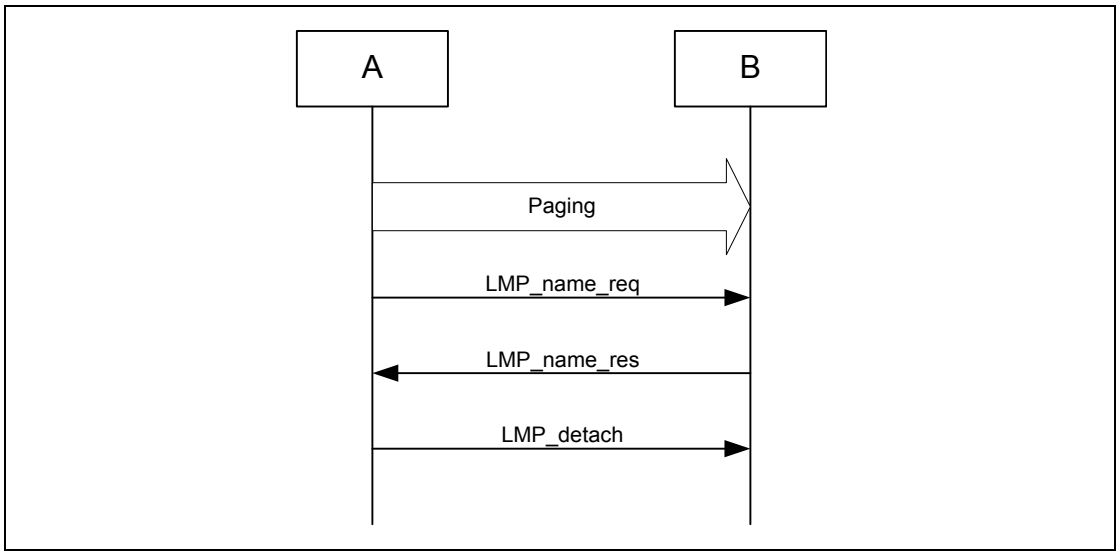

Figure 6.3: Name request procedure.

6.3.3.2 Name discovery

Name discovery is the procedure for retrieving the Bluetooth Device Name from connectable Bluetooth devices by performing name request towards known devices (i.e. Bluetooth devices for which the Bluetooth Device Addresses are available).

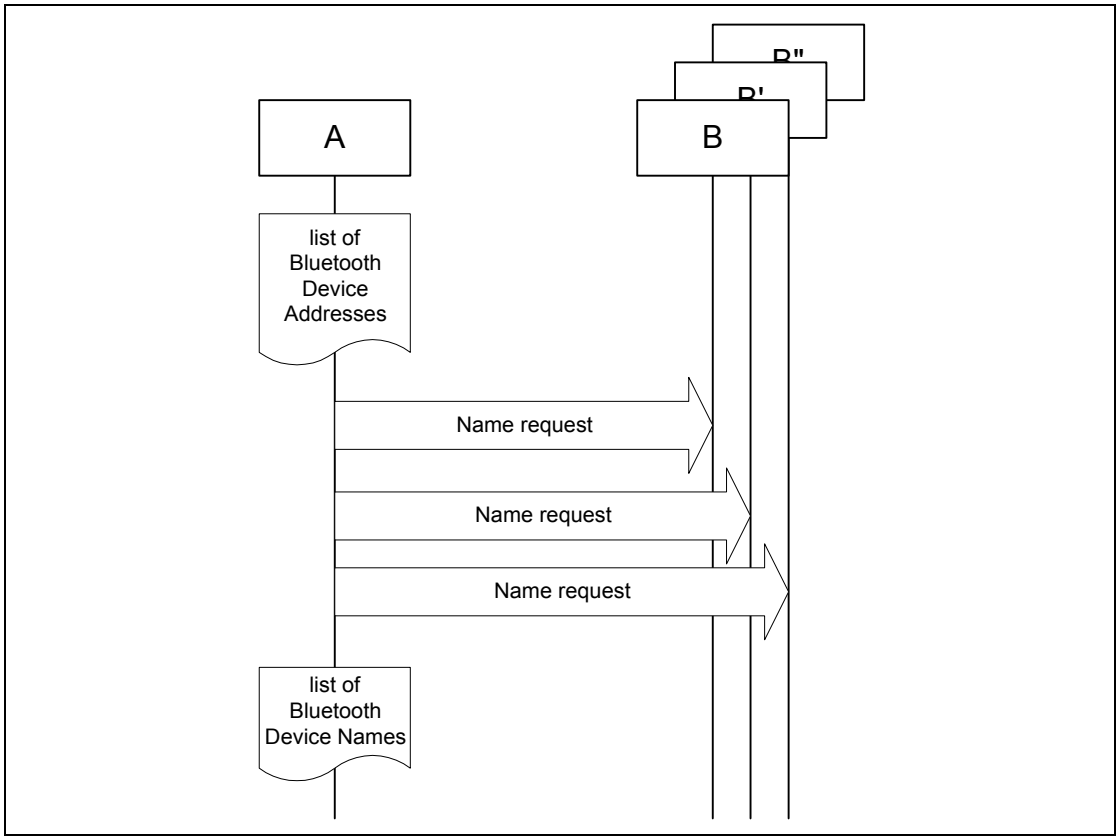

Figure 6.4: Name discovery procedure.

6.3.4 Conditions

In the name request procedure, the initiator will use the Device Access Code of the remote device as retrieved immediately beforehand – normally through an inquiry procedure.

6.4 DEVICE DISCOVERY

6.4.1 Purpose

The purpose of device discovery is to provide the initiator with the Bluetooth Device Address, clock, Class of Device, used page scan mode and Bluetooth device name of discoverable devices.

6.4.2 Term on UI level

’Bluetooth Device Discovery’.

6.4.3 Description

During the device discovery procedure, first an inquiry (either general or limited) is performed, and then name discovery is done towards some or all of the devices that responded to the inquiry.

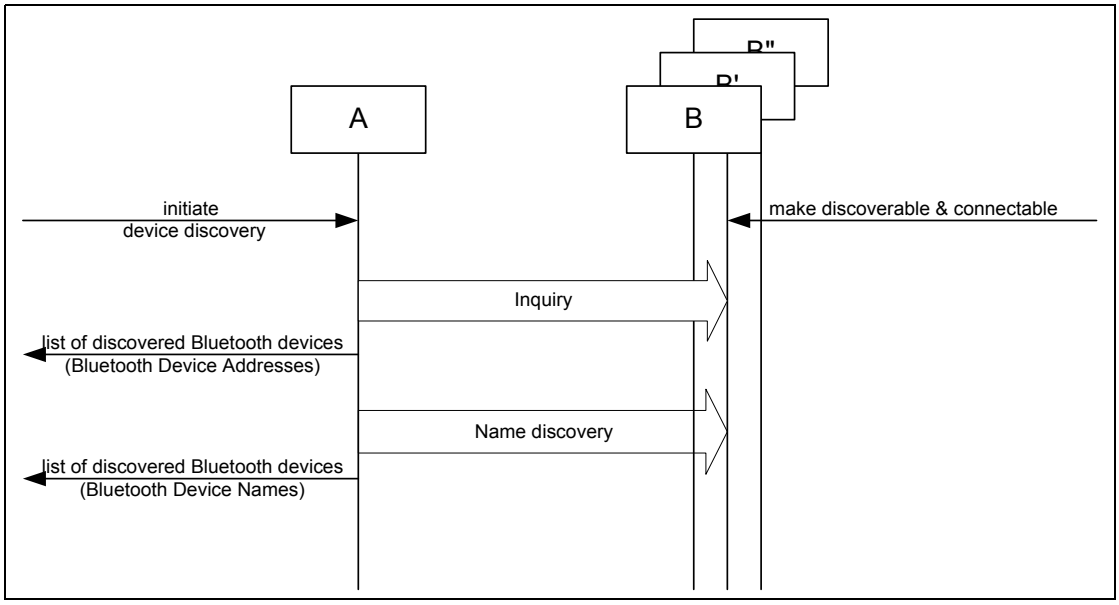

Figure 6.5: Device discovery procedure.

6.4.4 Conditions

Conditions for both inquiry (general or limited) and name discovery must be fulfilled (i.e. devices discovered during device discovery must be both discoverable and connectable).

6.5 BONDING

6.5.1 Purpose

The purpose of bonding is to create a relation between two Bluetooth devices based on a common link key (a bond). The link key is created and exchanged (pairing) during the bonding procedure and is expected to be stored by both Bluetooth devices, to be used for future authentication.

In addition to pairing, the bonding procedure can involve higher layer initialization procedures.

6.5.2 Term on UI level

’Bluetooth Bonding’

6.5.3 Description

Two aspects of the bonding procedure are described here. Dedicated bonding is what is done when the two devices are explicitly set to perform only a creation and exchange of a common link key.

General bonding is included to indicate that the framework for the dedicated bonding procedure is the same as found in the normal channel and connection establishment procedures. This means that pairing may be performed successfully if A has initiated bonding while B is in its normal connectable and security modes.

The main difference with bonding, as compared to a pairing done during link or channel establishment, is that for bonding it is the paging device (A) that must initiate the authentication.

6.5.3.1 General bonding

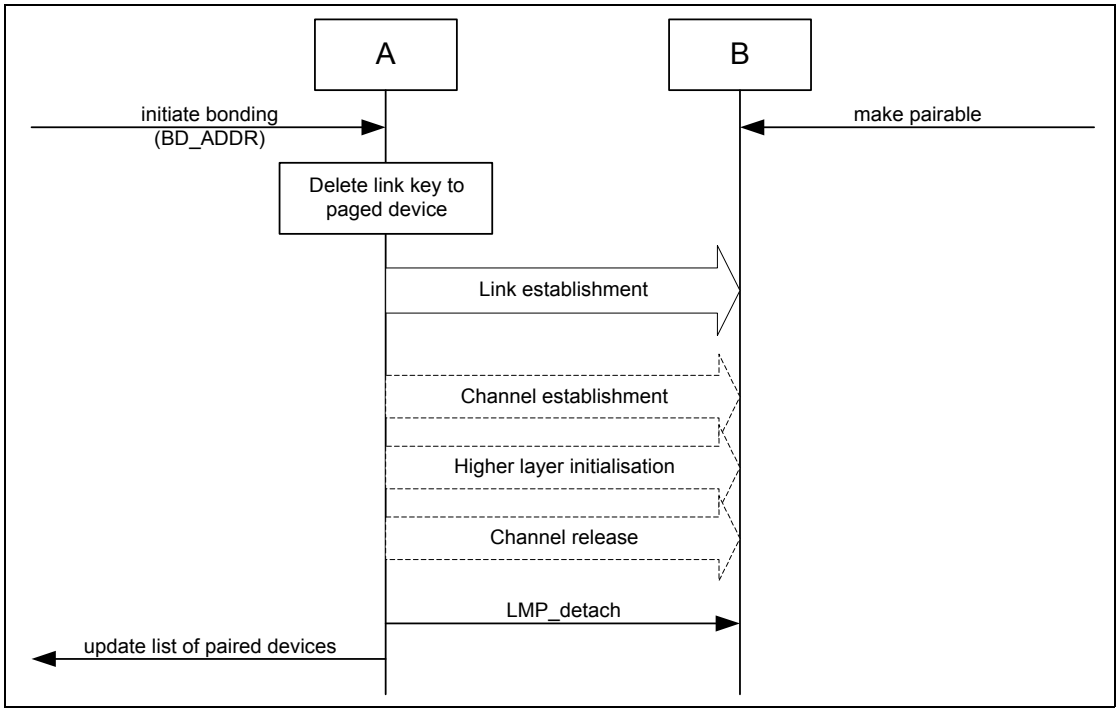

Figure 6.6: General description of bonding as being the link establishment procedure executed under specific conditions on both devices, followed by an optional higher layer initalization process.

6.5.3.2 Dedicated bonding

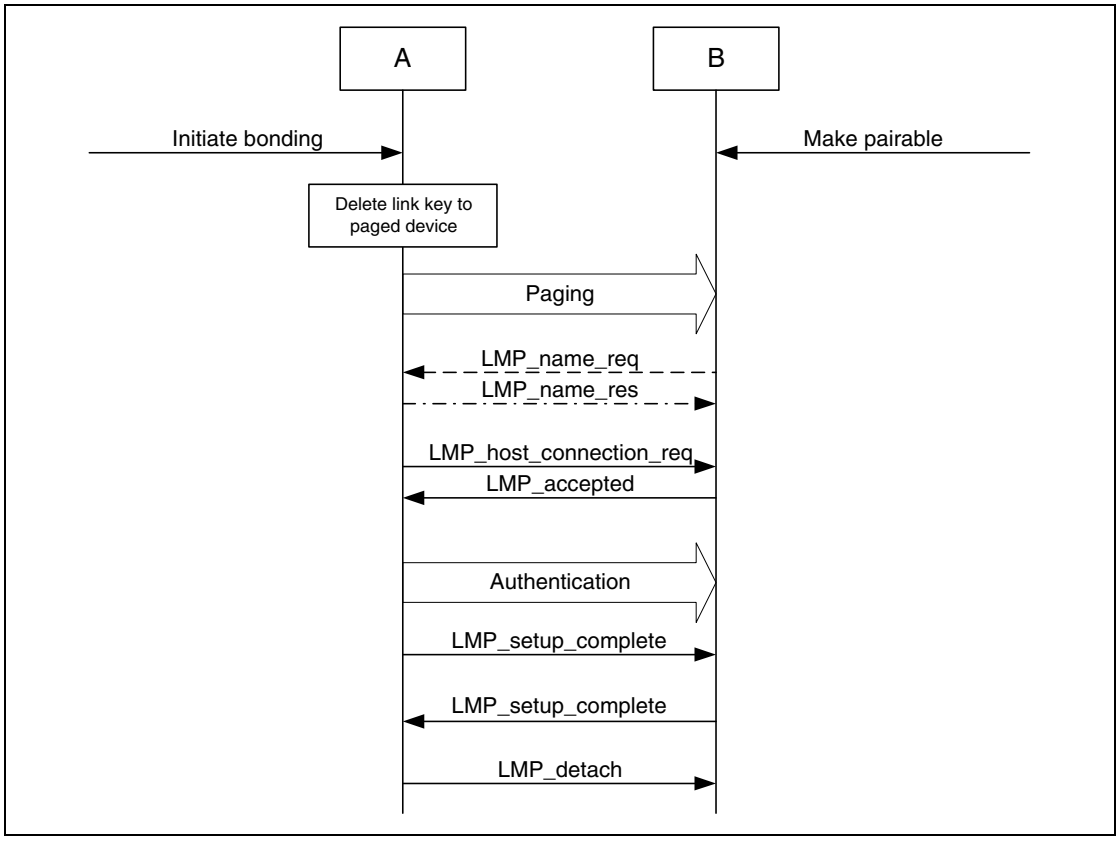

Figure 6.7: Bonding as performed when the purpose of the procedure is only to create and exchange a link key between two Bluetooth devices.

6.5.4 Conditions

Before bonding can be initiated, the initiating device (A) must know the Device Access Code of the device to pair with. This is normally done by first performing device discovery. A Bluetooth Device that can initiate bonding (A) should use limited inquiry, and a Bluetooth Device that accepts bonding (B) should support the limited discoverable mode.

Bonding is in principle the same as link establishment with the conditions:

- The paged device (B) shall be set into pairable mode. The paging device (A) is assumed to allow pairing since it has initiated the bonding procedure.
- The paging device (the initiator of the bonding procedure, A) shall initiate authentication.
- Before initiating the authentication part of the bonding procedure, the paging device should delete any link key corresponding to a previous bonding with the paged device.

7 ESTABLISHMENT PROCEDURES

	Procedure	Ref.	Support in A	Support in B
1	Link establishment	7.1	M	M
2	Channel establishment	7.2	O	M
3	Connection establishment	7.3	O	O

Table 7.1: Establishment procedures

The establishment procedures defined here do not include any discovery part. Before establishment procedures are initiated, the information provided during device discovery (in the FHS packet of the inquiry response or in the response to a name request) has to be available in the initiating device. This information is:

- The Bluetooth Device Address (BD_ADDR) from which the Device Access Code is generated;
- The system clock of the remote device;
- The page scan mode used by the remote device.

Additional information provided during device discovery that is useful for making the decision to initiate an establishment procedure is:

- The Class of device;
- The Device name.

7.1 LINK ESTABLISHMENT

7.1.1 Purpose

The purpose of the link establishment procedure is to establish a physical link (of ACL type) between two Bluetooth devices using procedures from [1] and [2].

7.1.2 Term on UI level

’Bluetooth link establishment’

7.1.3 Description

In this sub-section, the paging device (A) is in security mode 3. The paging device cannot during link establishment distinguish if the paged device (B) is in security mode 1 or 2.

7.1.3.1 B in security mode 1 or 2

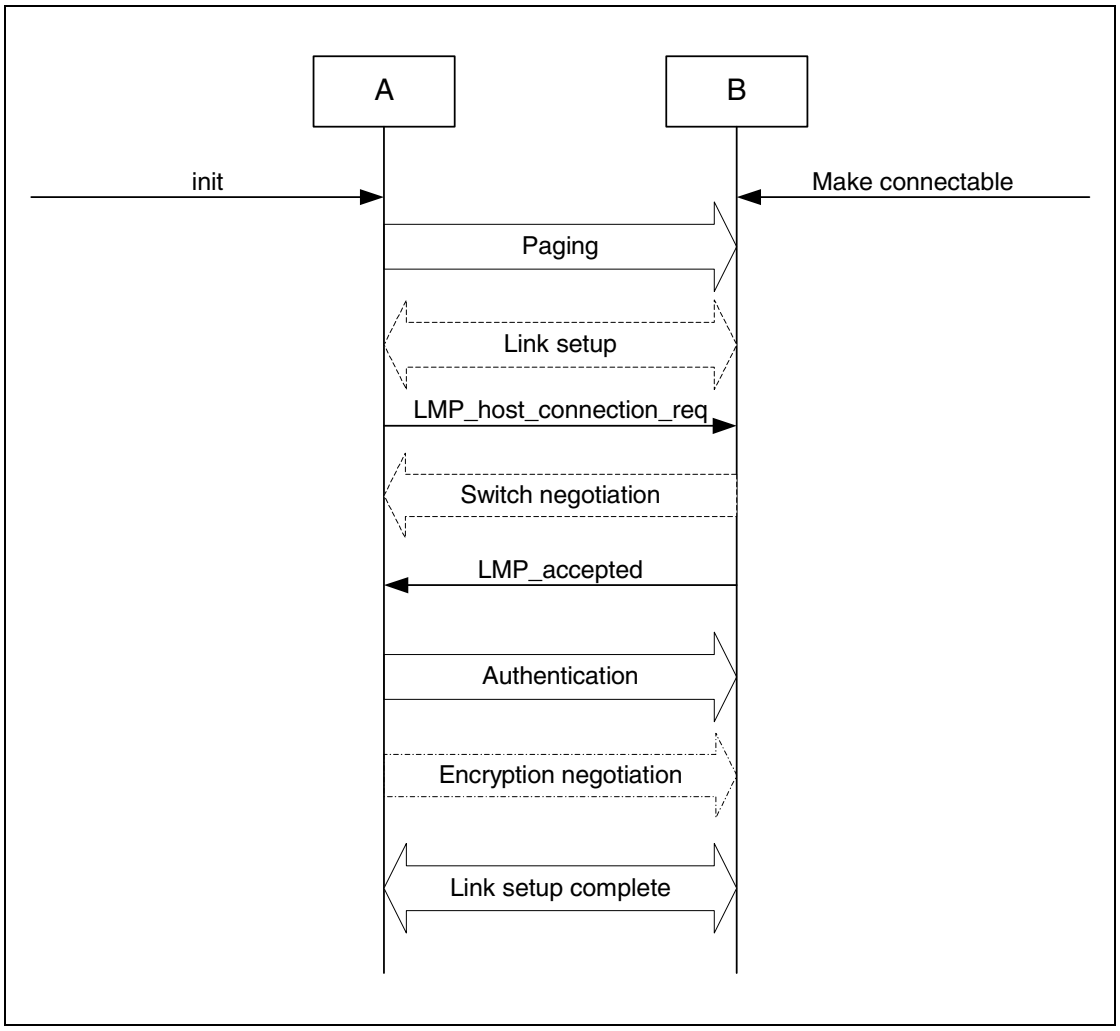

Figure 7.1: Link establishment procedure when the paging device (A) is in security mode 3 and the paged device (B) is in security mode 1 or 2.

7.1.3.2 B in security mode 3

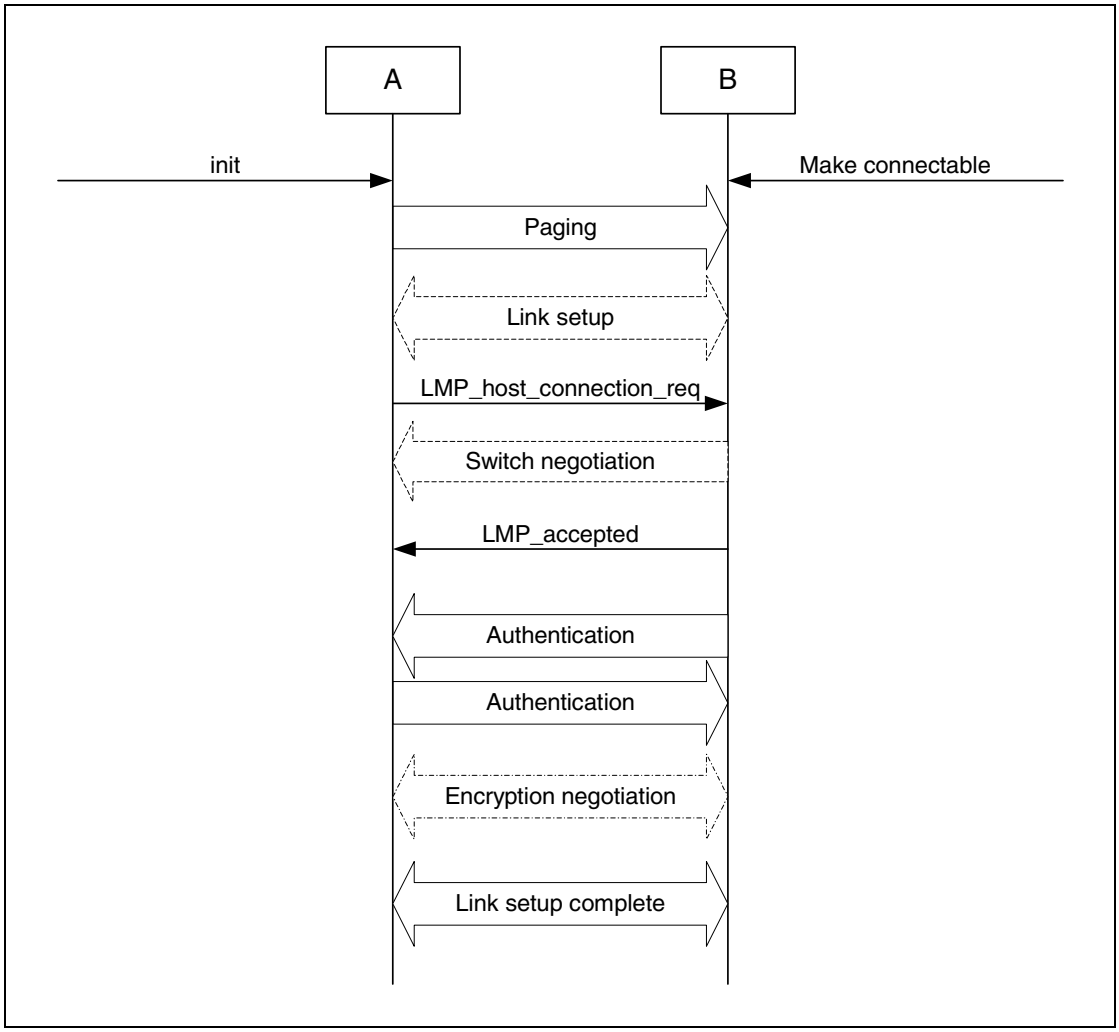

Figure 7.2: Link establishment procedure when both the paging device (A) and the paged device (B) are in security mode 3.

7.1.4 Conditions

The paging procedure shall be according to [1] and the paging device should use the Device access code and page mode received through a previous inquiry. When paging is completed, a physical link between the two Bluetooth devices is established.

If role switching is needed (normally it is the paged device that has an interest in changing the master/slave roles) it should be done as early as possible after the physical link is established. If the paging device does not accept the switch, the paged device has to consider whether to keep the physical link or not.

Both devices may perform link setup (using LMP procedures that require no interaction with the host on the remote side). Optional LMP features can be used after having confirmed (using LMP_feature_req) that the other device supports the feature.

When the paging device needs to go beyond the link setup phase, it issues a request to be connected to the host of the remote device. If the paged device is in security mode 3, this is the trigger for initiating authentication.

The paging device shall send LMP_host_connection_req during link establishment (i.e. before channel establishment) and may initiate authentication only after having sent LMP_host_connection_request.

After an authentication has been performed, any of the devices can initiate encryption.

Further link configuration may take place after the LMP_host_connection_req. When both devices are satisfied, they send LMP_setup_complete.

Link establishment is completed when both devices have sent LMP_setup_complete.

7.2 CHANNEL ESTABLISHMENT

7.2.1 Purpose

The purpose of the channel establishment procedure is to establish a Bluetooth channel (a logical link) between two Bluetooth devices using [3].

7.2.2 Term on UI level

’Bluetooth channel establishment’.

7.2.3 Description

In this sub-section, the initiator (A) is in security mode 3. During channel establishment, the initiator cannot distinguish if the acceptor (B) is in security mode 1 or 3.

7.2.3.1 B in security mode 2

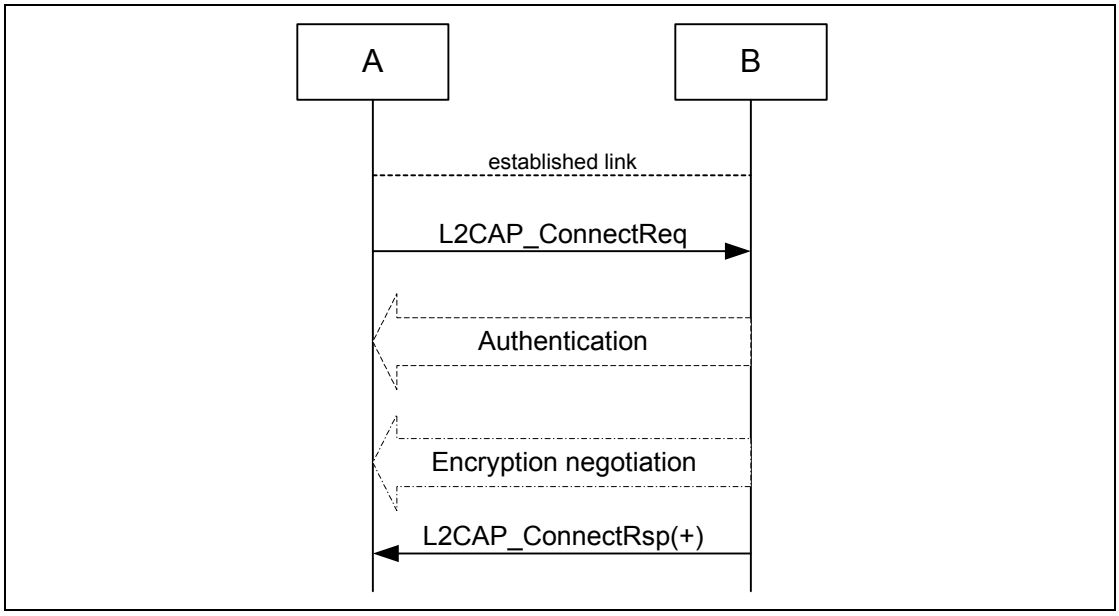

Figure 7.3: Channel establishment procedure when the initiator (A) is in security mode 3 and the acceptor (B) is in security mode 2.

7.2.3.2 B in security mode 1 or 3

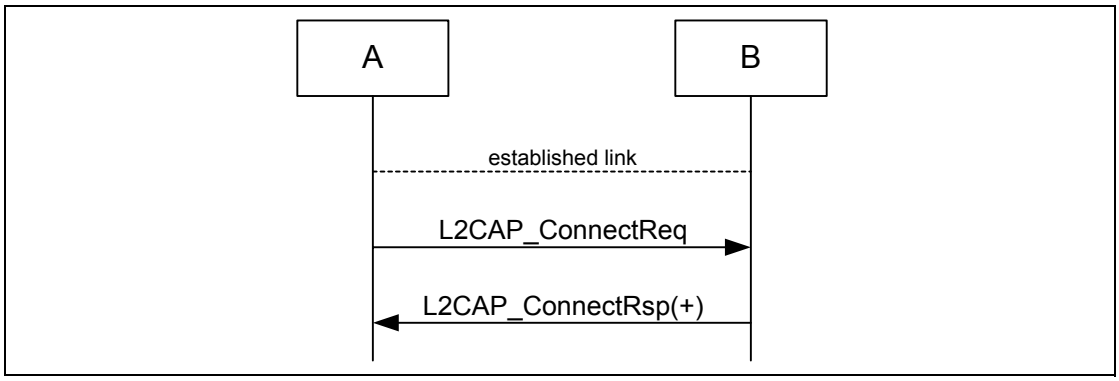

Figure 7.4: Channel establishment procedure when the initiator (A) is in security mode 3 and the acceptor (B) is in security mode 1 or 3.

7.2.4 Conditions

Channel establishment starts after link establishment is completed when the initiator sends a channel establishment request (L2CAP_ConnectReq).

Depending on security mode, security procedures may take place after the channel establishment has been initiated.

Channel establishment is completed when the acceptor responds to the channel establishment request (with a positive L2CAP_ConnectRsp).

7.3 CONNECTION ESTABLISHMENT

7.3.1 Purpose

The purpose of the connection establishment procedure is to establish a connection between applications on two Bluetooth devices.

7.3.2 Term on UI level

'Bluetooth connection establishment'

7.3.3 Description

In this sub-section, the initiator (A) is in security mode 3. During connection establishment, the initiator cannot distinguish if the acceptor (B) is in security mode 1 or 3.

7.3.3.1 B in security mode 2

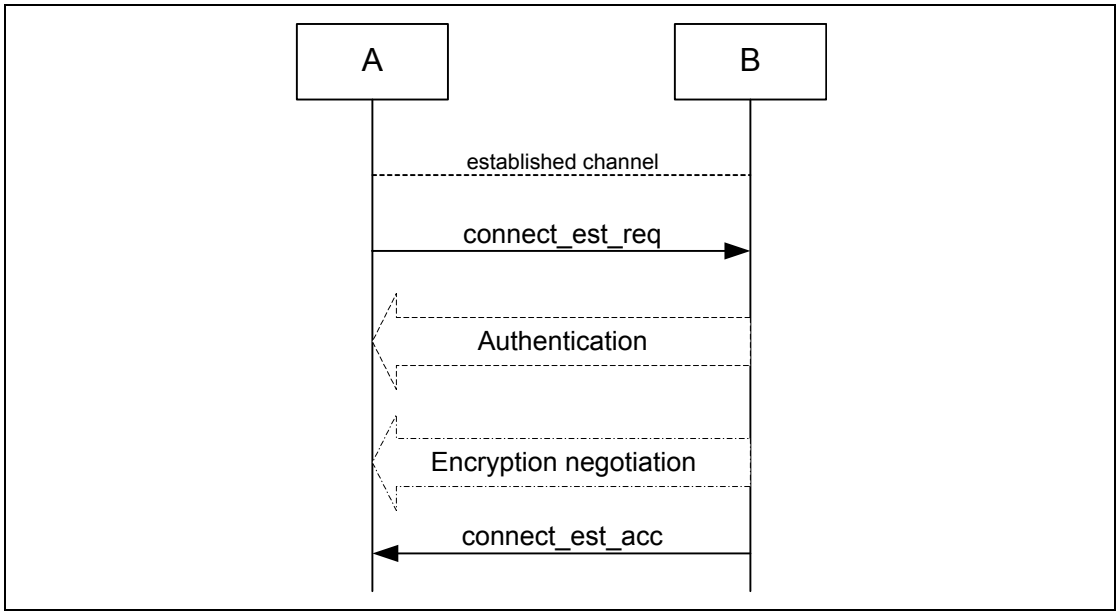

Figure 7.5: Connection establishment procedure when the initiator (A) is in security mode 3 and the acceptor (B) is in security mode 2.

7.3.3.2 B in security mode 1 or 3

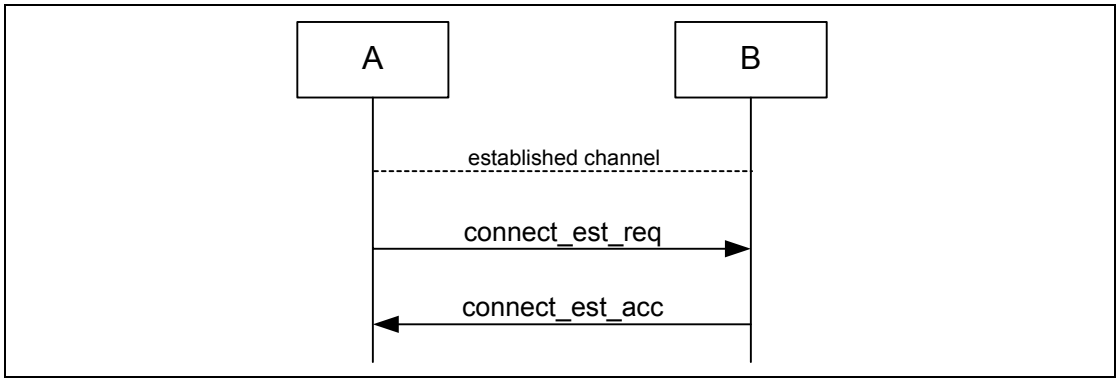

Figure 7.6: Connection establishment procedure when the initiator (A) is in security mode 3 and the acceptor (B) is in security mode 1 or 3.

7.3.4 Conditions

Connection establishment starts after channel establishment is completed, when the initiator sends a connection establishment request ('connect_est_req' is application protocol-dependent). This request may be a TCS SETUP message [5] in the case of a Bluetooth telephony application Cordless Telephony Profile, or initialization of RFCOMM and establishment of DLC [4] in the case of a serial port-based application Serial Port Profile (although neither TCS or RFCOMM use the term 'connection' for this).

Connection establishment is completed when the acceptor accepts the connection establishment request ('connect_est_acc' is application protocol dependent).

7.4 ESTABLISHMENT OF ADDITIONAL CONNECTION

When a Bluetooth device has established one connection with another Bluetooth device, it may be available for establishment of:

- A second connection on the same channel, and/or
- A second channel on the same link, and/or
- A second physical link.

If the new establishment procedure is to be towards the same device, the security part of the establishment depends on the security modes used. If the new establishment procedure is to be towards a new remote device, the device should behave according to active modes independent of the fact that it already has another physical link established (unless allowed co-incident radio and baseband events have to be handled).

8 DEFINITIONS

In the following, terms written with capital letters refer to states.

8.1 GENERAL DEFINITIONS

Mode . A set of directives that defines how a device will respond to certain events.

Idle . As seen from a remote device, a Bluetooth device is idle, or is in idle mode, when there is no link established between them.

Bond . A relation between two Bluetooth devices defined by creating, exchanging and storing a common link key. The bond is created through the bonding or LMP-pairing procedures.

8.2 CONNECTION-RELATED DEFINITIONS

Physical channel . A synchronized Bluetooth baseband-compliant RF hopping sequence.

Piconet . A set of Bluetooth devices sharing the same physical channel defined by the master parameters (clock and BD_ADDR).

Physical link . A Baseband-level connection[1] between two devices established using paging. A physical link comprises a sequence of transmission slots on a physical channel alternating between master and slave transmission slots.

ACL link . An asynchronous (packet-switched) connection[1] between two devices created on LMP level. Traffic on an ACL link uses ACL packets to be transmitted.

SCO link . A synchronous (circuit-switched) connection[1] for reserved bandwidth communications; e.g. voice between two devices, created on the LMP level by reserving slots periodically on a physical channel. Traffic on an SCO link uses SCO packets to be transmitted. SCO links can be established only after an ACL link has first been established.

Link . Shorthand for an ACL link.

PAGE . A baseband state where a device transmits page trains, and processes any eventual responses to the page trains.

PAGE_SCAN . A baseband state where a device listens for page trains.

1. The term ’connection’ used here is not identical to the definition below. It is used in the absence of a more concise term.

Page . The transmission by a device of page trains containing the Device Access Code of the device to which the physical link is requested.

Page scan . The listening by a device for page trains containing its own Device Access Code.

Channel . A logical connection on L2CAP level between two devices serving a single application or higher layer protocol.

Connection . A connection between two peer applications or higher layer protocols mapped onto a channel.

Connecting . A phase in the communication between devices when a connection between them is being established. (Connecting phase follows after the link establishment phase is completed.)

Connect (to service) . The establishment of a connection to a service. If not already done, this includes establishment of a physical link, link and channel as well.

8.3 DEVICE-RELATED DEFINITIONS

Discoverable device . A Bluetooth device in range that will respond to an inquiry (normally in addition to responding to page).

Silent device . A Bluetooth device appears as silent to a remote device if it does not respond to inquiries made by the remote device. A device may be silent due to being non-discoverable or due to baseband congestion while being discoverable.

Connectable device . A Bluetooth device in range that will respond to a page.

Trusted device . A paired device that is explicitly marked as trusted.

Paired device . A Bluetooth device with which a link key has been exchanged (either before connection establishment was requested or during connecting phase).

Pre-paired device . A Bluetooth device with which a link key was exchanged, and the link key is stored, before link establishment.

Un-paired device . A Bluetooth device for which there was no exchanged link key available before connection establishment was request.

Known device . A Bluetooth device for which at least the BD_ADDR is stored.

Un-known device . A Bluetooth device for which no information (BD_ADDR, link key or other) is stored.

Authenticated device . A Bluetooth device whose identity has been verified during the lifetime of the current link, based on the authentication procedure.

8.4 PROCEDURE-RELATED DEFINITIONS

Paging . A procedure for establishing a physical link of ACL type on baseband level, consisting of a page action of the initiator and a page scan action of the responding device.

Link establishment . A procedure for establishing a link on LMP level. A link is established when both devices have agreed that LMP setup is completed.

Channel establishment . A procedure for establishing a channel on L2CAP level.

Connection establishment . A procedure for creating a connection mapped onto a channel.

Creation of a trusted relationship . A procedure where the remote device is marked as a trusted device. This includes storing a common link key for future authentication and pairing (if the link key is not available).

Creation of a secure connection. A procedure of establishing a connection, including authentication and encryption.

Device discovery . A procedure for retrieving the Bluetooth device address, clock, class-of-device field and used page scan mode from discoverable devices.

Name discovery . A procedure for retrieving the user-friendly name (the Bluetooth device name) of a connectable device.

Service discovery . Procedures for querying and browsing for services offered by or through another Bluetooth device.

8.5 SECURITY-RELATED DEFINITIONS

Authentication . A generic procedure based on LMP-authentication if a link key exists or on LMP-pairing if no link key exists.

LMP-authentication . An LMP level procedure for verifying the identity of a remote device. The procedure is based on a challenge-response mechanism using a random number, a secret key and the BD_ADDR of the non-initiating device. The secret key used can be a previously exchanged link key.

Authorization . A procedure where a user of a Bluetooth device grants a specific (remote) Bluetooth device access to a specific service. Authorization implies that the identity of the remote device can be verified through authentication.

Authorize . The act of granting a specific Bluetooth device access to a specific service. It may be based upon user confirmation, or given the existence of a trusted relationship.

LMP-pairing . A procedure that authenticates two devices, based on a PIN, and subsequently creates a common link key that can be used as a basis for a trusted relationship or a (single) secure connection. The procedure consists of the steps: creation of an initialization key (based on a random number and a PIN), creation and exchange of a common link key and LMP-authentication based on the common link key.

Bonding . A dedicated procedure for performing the first authentication, where a common link key is created and stored for future use.

Trusting . The marking of a paired device as trusted. Trust marking can be done by the user, or automatically by the device (e.g. when in pairable mode) after a successful pairing.

9 APPENDIX A (NORMATIVE): TIMERS AND CONSTANTS

The following timers are required by this profile.

Timer name	Recommended value	Description	Comment
$T_{GAP}(100)$	10.24 s	Normal time span that a Bluetooth device performs inquiry.	Used during inquiry and device discovery.
$T_{GAP}(101)$	10.625 ms	Minimum time in INQUIRY_SCAN.	A discoverable Bluetooth device enters INQUIRY_SCAN for at least $T_{GAP}(101)$ every $T_{GAP}(102)$.
$T_{GAP}(102)$	2.56 s	Maximum time between repeated INQUIRY_SCAN enterings.	Maximum value of the inquiry scan interval, $T_{inquiry\ scan}$.
$T_{GAP}(103)$	30.72 s	A Bluetooth device shall not be in a discoverable mode less than $T_{GAP}(103)$.	Minimum time to be discoverable.
$T_{GAP}(104)$	1 min	A Bluetooth device should not be in limited discoverable mode more than $T_{GAP}(104)$.	Recommended upper limit.
$T_{GAP}(105)$	100ms	Maximum time between INQUIRY_SCAN enterings	Recommended value
$T_{GAP}(106)$	100ms	Maximum time between PAGE_SCAN enterings	Recommended value
$T_{GAP}(107)$	1.28s	Maximum time between PAGE_SCAN enterings (R1 page scan)	Recommended value
$T_{GAP}(108)$	2.56s	Maximum time between PAGE_SCAN enterings (R2 page scan)	Recommended value

Table 9.1: Defined GAP timers

10 APPENDIX B (INFORMATIVE): INFORMATION FLOWS OF RELATED PROCEDURES

10.1 LMP-AUTHENTICATION

The specification of authentication on link level is found in [2].

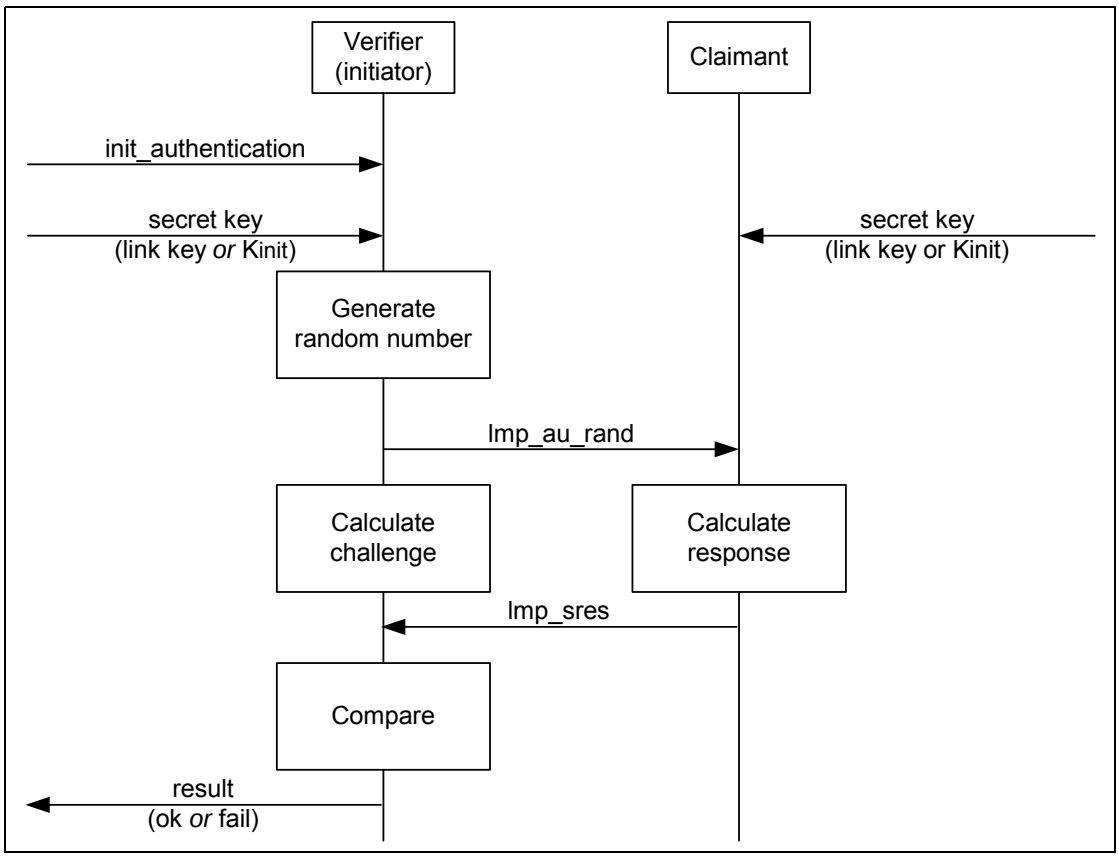

Figure 10.1: LMP-authentication as defined by [2].

The secret key used here is an already exchanged link key.

10.2 LMP-PAIRING

The specification of pairing on link level is found in [2].

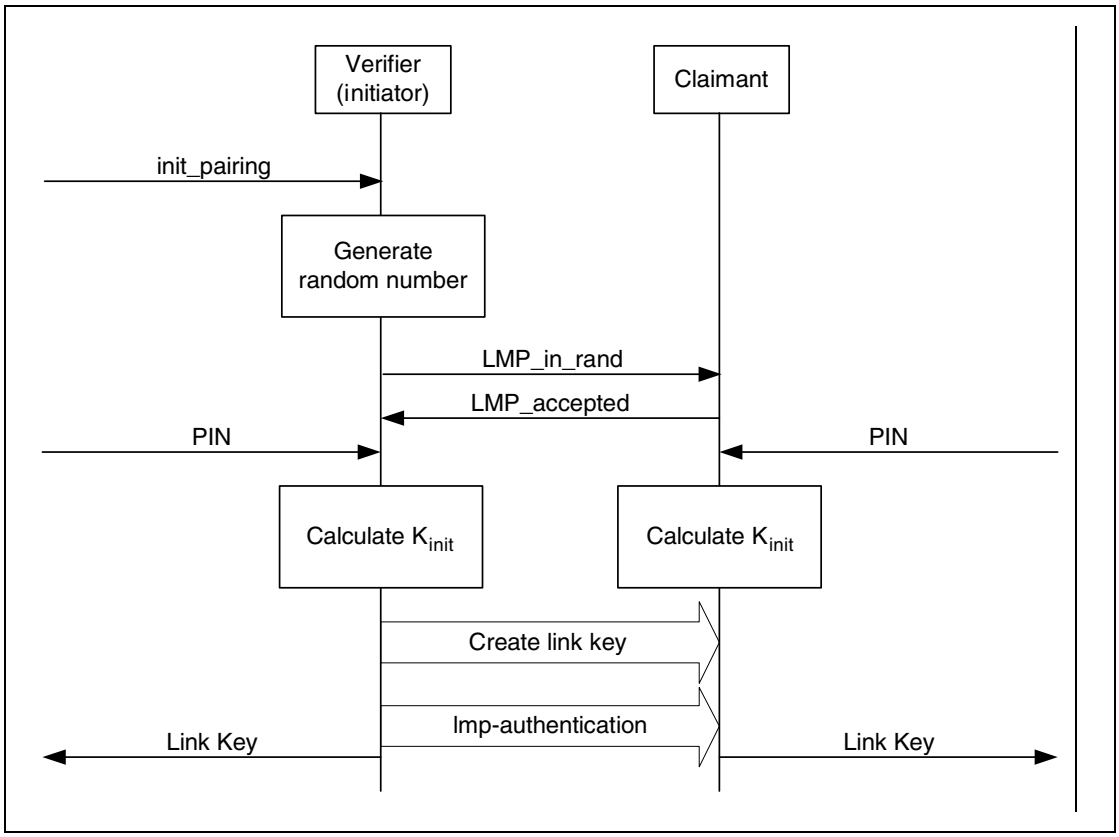

Figure 10.2: LMP-pairing as defined in [2].

The PIN used here is PN_{BB}.

The create link key procedure is described in [Vol. 2, Part C] Section 4.2.2.4 on page 228 and [Vol. 2, Part H] Section 3.2 on page 755. In case the link key is based on a combination key, a mutual authentication takes place and shall be performed irrespective of current security mode.

10.3 SERVICE DISCOVERY

The Service Discovery Protocol [6] specifies what PDUs are used over-the-air to inquire about services and service attributes. The procedures for discovery of supported services and capabilities using the Service Discovery Protocol are described in the Service Discovery Application Profile. This is just an example.

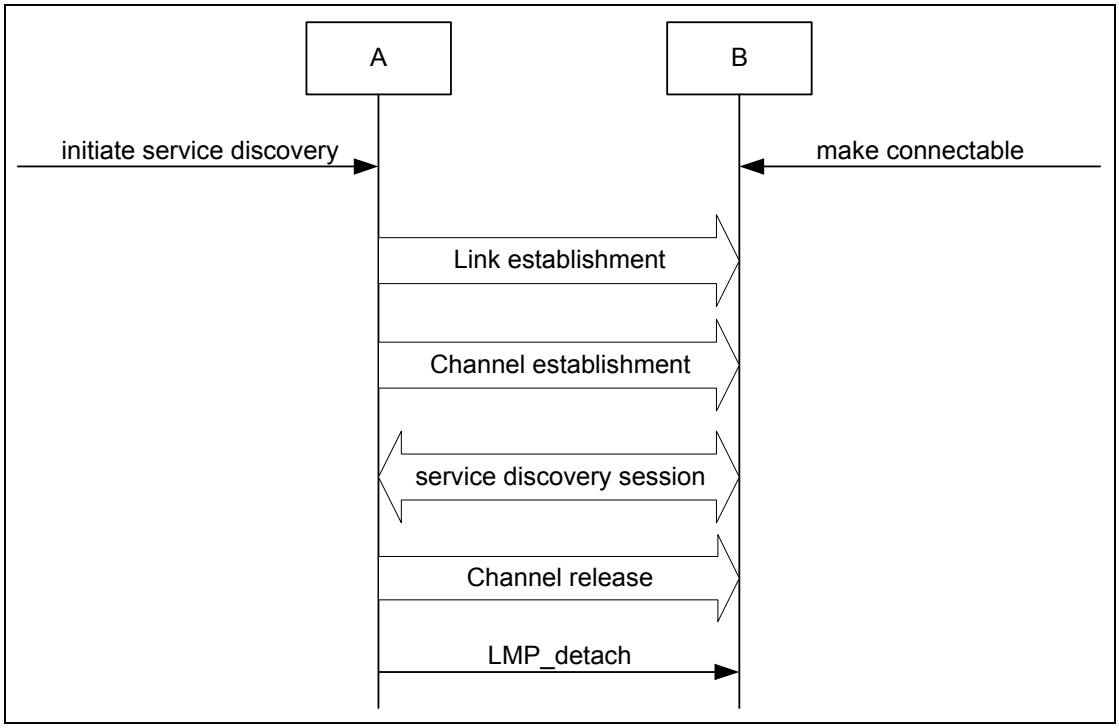

Figure 10.3: Service discovery procedure.

11 REFERENCES

[1] Bluetooth Baseband Specification

[2] Bluetooth Link Manager Protocol

[3] Bluetooth Logical Link Control and Adaptation Protocol

[4] Bluetooth RFCOMM

[5] Bluetooth Telephony Control Specification

[6] Bluetooth Service Discovery Protocol

[7] Bluetooth Service Discovery Application Profile

[8] Bluetooth Cordless Telephony Profile

[9] Bluetooth Serial Port Profile

[10] Bluetooth Security Architecture (white paper)

[11] Bluetooth Assigned Numbers
https://www.bluetooth.org/foundry/assignnumb/document/assigned_numbers

Core System Package [Host volume]
Part D

TEST SUPPORT

CONTENTS

1 Test Methodology 233
1.1 Test Scenarios 233
1.1.1 Test setup 233
1.1.2 Transmitter Test 234
1.1.2.1 Packet Format 235
1.1.2.2 Pseudorandom Sequence 236
1.1.2.3 Control of Transmit Parameters 237
1.1.2.4 Power Control 237
1.1.2.5 Switch Between Different Frequency Settings237
1.1.2.6 Adaptive Frequency Hopping 238
1.1.3 LoopBack test 239
1.1.4 Pause test 242
1.2 References 242
2 Test Control Interface (TCI) 243
2.1 Introduction 243
2.1.1 Terms used 243
2.1.2 Usage of the interface 243
2.2 TCI Configurations 244
2.2.1 Bluetooth RF requirements 244
2.2.1.1 Required interfaces 244
2.2.2 Bluetooth protocol requirements 245
2.2.2.1 Required interfaces 245
2.2.3 Bluetooth profile requirements 246
2.2.3.1 Required interfaces 246
2.3 TCI Configuration and Usage 247
2.3.1 Transport layers 247
2.3.1.1 Physical bearer 247
2.3.1.2 Software bearer 247
2.3.2 Baseband and link manager qualification 248
2.3.3 HCI qualification 250

1 TEST METHODOLOGY

This section describes the test mode for hardware and low-level functionality tests of Bluetooth devices. The test mode includes transmitter tests (packets with constant bit patterns) and loop back tests.

The test mode supports testing of the Bluetooth transmitter and receiver. It is intended mainly for certification/compliance testing of the radio and baseband layer, and may also be used for regulatory approval or in-production and after-sales testing.

1.1 TEST SCENARIOS

A device in test mode shall not support normal operation. For security reasons the test mode is designed such that it offers no benefit to the user. Therefore, no data output or acceptance on a HW or SW interface shall be allowed.

1.1.1 Test setup

The setup consists of a device under test (DUT) and a tester. Optionally, additional measurement equipment may be used.

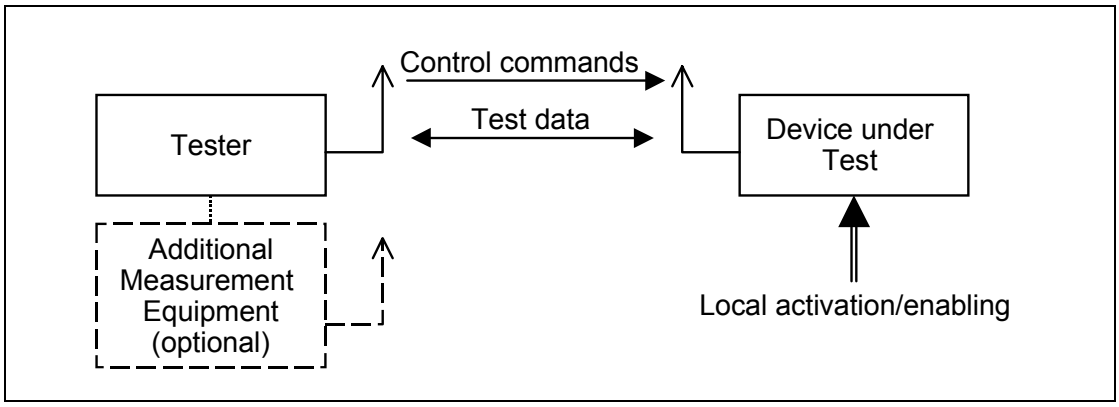

Figure 1.1: Setup for Test Mode

Tester and DUT form a piconet where the tester acts as master and has full control over the test procedure. The DUT acts as slave.

The control is done via the air interface using LMP commands (see [Vol. 2, Part C] Section 4.7.3 on page 266). Hardware interfaces to the DUT may exist, but are not subject to standardization.

The test mode is a special state of the Bluetooth model. For security and type approval reasons, a Bluetooth device in test mode shall not support normal operation. When the DUT leaves the test mode it enters the standby state. After power-off the Bluetooth device shall return to standby state.

1.1.2 Transmitter Test

The Bluetooth device transmits a constant bit pattern. This pattern is transmitted periodically with packets aligned to the slave TX timing of the piconet formed by tester and DUT. The same test packet is repeated for each transmission.

The transmitter test is started when the master sends the first POLL packet. In non-hopping mode agreed frequency is used for this POLL packet.

The tester (master) transmits control or POLL packets in the master-to-slave transmission slots. The DUT (slave) shall transmit packets in the following slave-to-master transmission slot. The tester's polling interval is fixed and defined by the LMP_test_control PDU. The device under test may transmit its burst according to the normal timing even if no packet from the tester was received. In this case, the ARQN bit is shall be set to NAK.

The burst length may exceed the length of a one slot packet. In this case the tester may take the next free master TX slot for polling. The timing is illustrated in Figure 1.2.

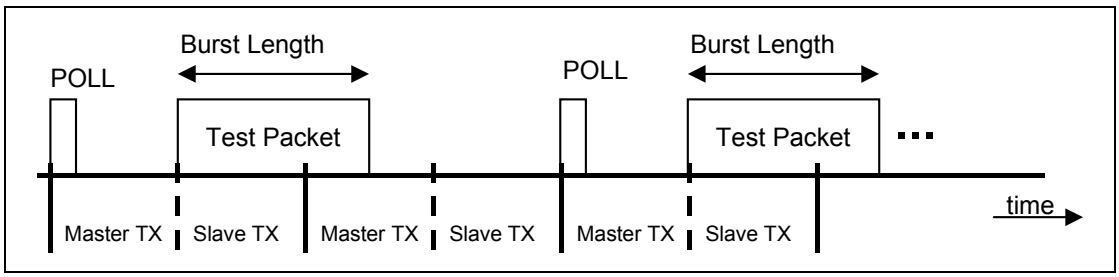

Figure 1.2: Timing for Transmitter Test

1.1.2.1 Packet Format

The test packet is a normal Bluetooth packet, see Figure 1.3. For the payload itself see below.

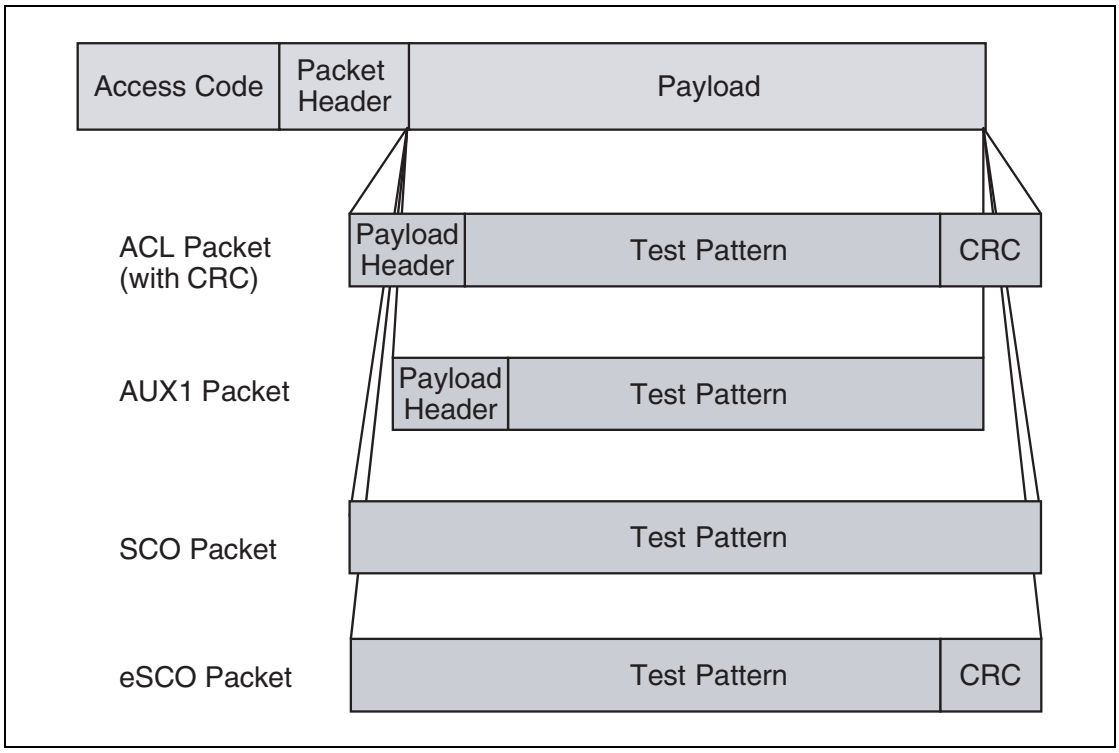

Figure 1.3: General Format of TX Packet

During configuration the tester defines:

- the packet type to be used
- payload length

For the payload length, the restrictions from the baseband specification shall apply (see "Baseband Specification" on page 45[vol. 2]). In case of ACL, SCO and eSCO packets the payload structure defined in the baseband specification is preserved as well, see Figure 1.3 on page 235.

For the transmitter test mode, only packets without FEC should be used; i.e. HV3,EV3, EV5, DH1, DH3, DH5 and AUX1packets.

In transmitter test mode, the packets exchanged between the tester and the DUT shall not be scrambled with the whitening sequence. Whitening shall be turned off when the DUT has accepted to enter the transmitter test mode, and shall be turned on when the DUT has accepted to exit the transmitter test mode, see Figure 1.4 on page 236. Implementations shall insure that retransmissions of the LMP_accepted messages use the same whitening status as used in the original LMP_accepted.

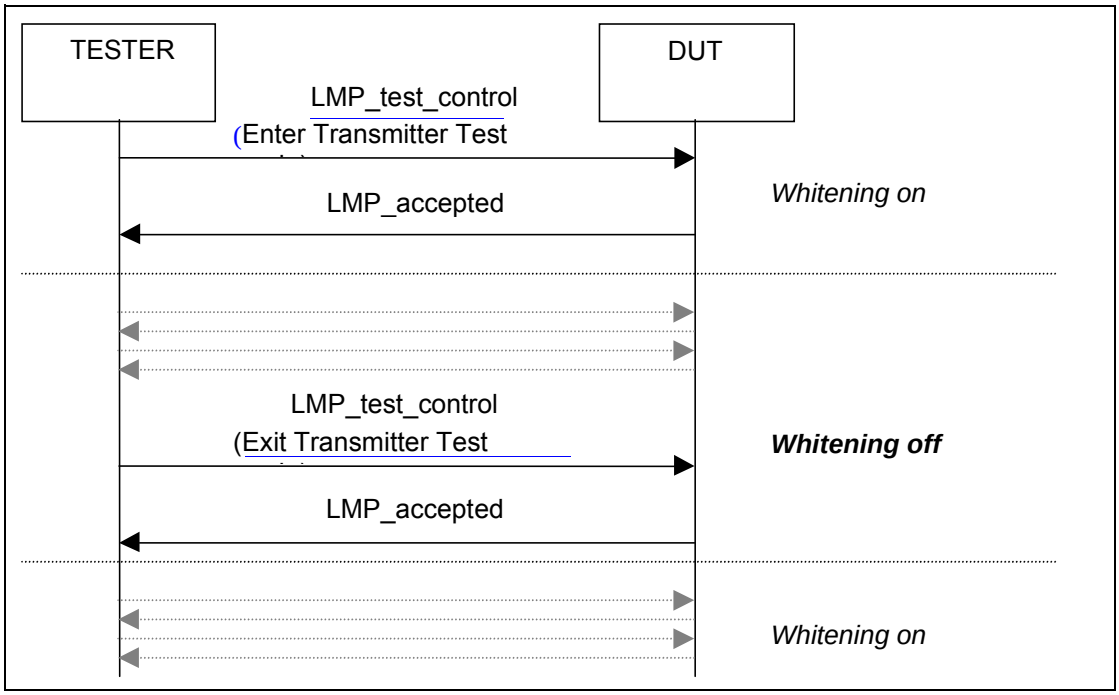

Figure 1.4: Use of whitening in Transmitter mode

1.1.2.2 Pseudorandom Sequence

The same pseudorandom sequence of bits shall be used for each transmission (i.e. the packet is repeated). A PRBS-9 Sequence is used, see [2] and [3].

The properties of this sequence are as follows (see [3]). The sequence may be generated in a nine-stage shift register whose 5th and 9th stage outputs are added in a modulo-two addition stage (see Figure 1.5), and the result is fed back to the input of the first stage. The sequence begins with the first ONE of 9 consecutive ONEs; i.e. the shift register is initialized with nine ones.

- Number of shift register stages: 9
- Length of pseudo-random sequence: 2^9-1 = 511 bits
- Longest sequence of zeros: 8 (non-inverted signal)

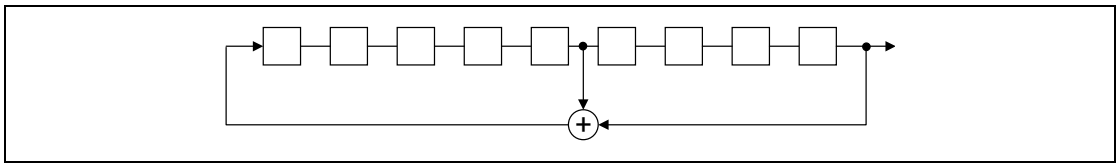

Figure 1.5: Linear Feedback Shift Register for Generation of the PRBS sequence

1.1.2.3 Control of Transmit Parameters

The following parameters can be set to configure the transmitter test:

1. Bit pattern:
   - Constant zero
   - Constant one
   - Alternating 1010...[1]
   - Alternating 1111 0000 1111 0000...[4]
   - Pseudorandom bit pattern
   - Transmission off
2. Frequency selection:
   - Single frequency
   - Normal hopping
3. TX frequency
   - k ⇒ f := (2402 + k) MHz
4. Default poll period in TDD frames (n * 1.25 ms)
5. Packet Type
6. Length of Test Sequence (user data of packet definition in "Baseband Specification" on page 45[vol. 2])

1.1.2.4 Power Control

If adaptive power control is tested, the normal LMP commands will be used. The DUT shall start transmitting at the maximum power and shall reduce/ increase its power by one step on every LMP_incr_power_req or LMP_decr_power_req command received.

1.1.2.5 Switch Between Different Frequency Settings

A change in the frequency selection becomes effective when the LMP procedure is completed:

When the tester receives the LMP_accepted it shall then transmit POLL packets containing the Ack for at least 8 slots (4 transmissions). When these transmissions have been completed the tester shall change to the new frequency hop and whitening settings.

After sending LMP_accepted the DUT shall wait for the LC level Ack for the LMP_accepted. When this is received it shall change to the new frequency hop and whitening settings.

1. It is recommended that the sequence starts with a one; but, as this is irrelevant for measurements, it is also allowed to start with a zero.

There will be an implementation defined delay after sending the LMP_accepted before the TX or loopback test starts. Testers shall be able to cope with this.

Note: Loss of the LMP_Accepted packet will eventually lead to a loss of frequency synchronization that cannot be recovered. Similar problems occur in normal operation, when the hopping pattern changes.

1.1.2.6 Adaptive Frequency Hopping

Adaptive Frequency Hopping (AFH) shall only be used when the Hopping Mode is set to 79 channels (e.g. Hopping Mode = 1) in the LMP_test_control PDU. If AFH is used, the normal LMP commands and procedures shall be used. When AFH is enabled prior to entering test mode it shall continue to be used with the same parameters if Hopping Mode = 1 until the AFH parameters are changed by the LMP_set_AFH PDU.

The channel classification reporting state shall be retained upon entering or exiting Test Mode. The DUT shall change the channel classification reporting state in Test Mode based on control messages from the tester (LMP_channel_classification_req) and from the Host (HCI Write_AFH_Channel_Classification_Mode).

1.1.3 LoopBack test

In loopback, the device under test receives normal baseband packets containing payload *Accepted* from the tester. The received packets shall be decoded in the DUT, and the payload shall be sent back using the same packet type. The return packet shall be sent back in either the slave-to-master transmission slot directly following the transmission of the tester, or it is delayed and sent back in the slave-to-master transmission slot after the next transmission of the tester (see Figure 1.7 to Figure 1.9 on page 241).

There is no signalling to determine or control the mode. The device behavior shall be fixed or adjusted by other means, and shall not change randomly.

The tester can select, whether whitening is on or off. This setting holds for both up- and downlink. For switching the whitening status, the same rules as in Section 1.1.2 on page 234 (Figure 1.4) shall apply.

The following rules apply (for illustration see Figure 1.6 on page 240):

- If the synch word was not detected, the DUT shall not reply.
- If the header error check (HEC) fails, the DUT shall either reply with a NULL packet with the ARQN bit set to NAK or send nothing.
- If the packet contains an LMP message relating to the control of the test mode this command shall be executed and the packet shall not be returned, though ACK or NAK shall be returned as per the usual procedure. Other LMP commands are ignored and no packet is returned.
- The payload FEC is decoded and the payload shall be encoded again for transmission. This allows testing of the FEC handling. If the pure bit error rate shall be determined the tester chooses a packet type without FEC.
- The CRC is shall be evaluated. In the case of a failure, ARQN=NAK shall be returned. The payload shall be returned as received.
  A new CRC for the return packet shall be calculated for the returned payload regardless of whether the CRC was valid or not.
- If the CRC fails for a packet with a CRC and a payload header, the number of bytes as indicated in the (possibly erroneous) payload header shall be looped back.

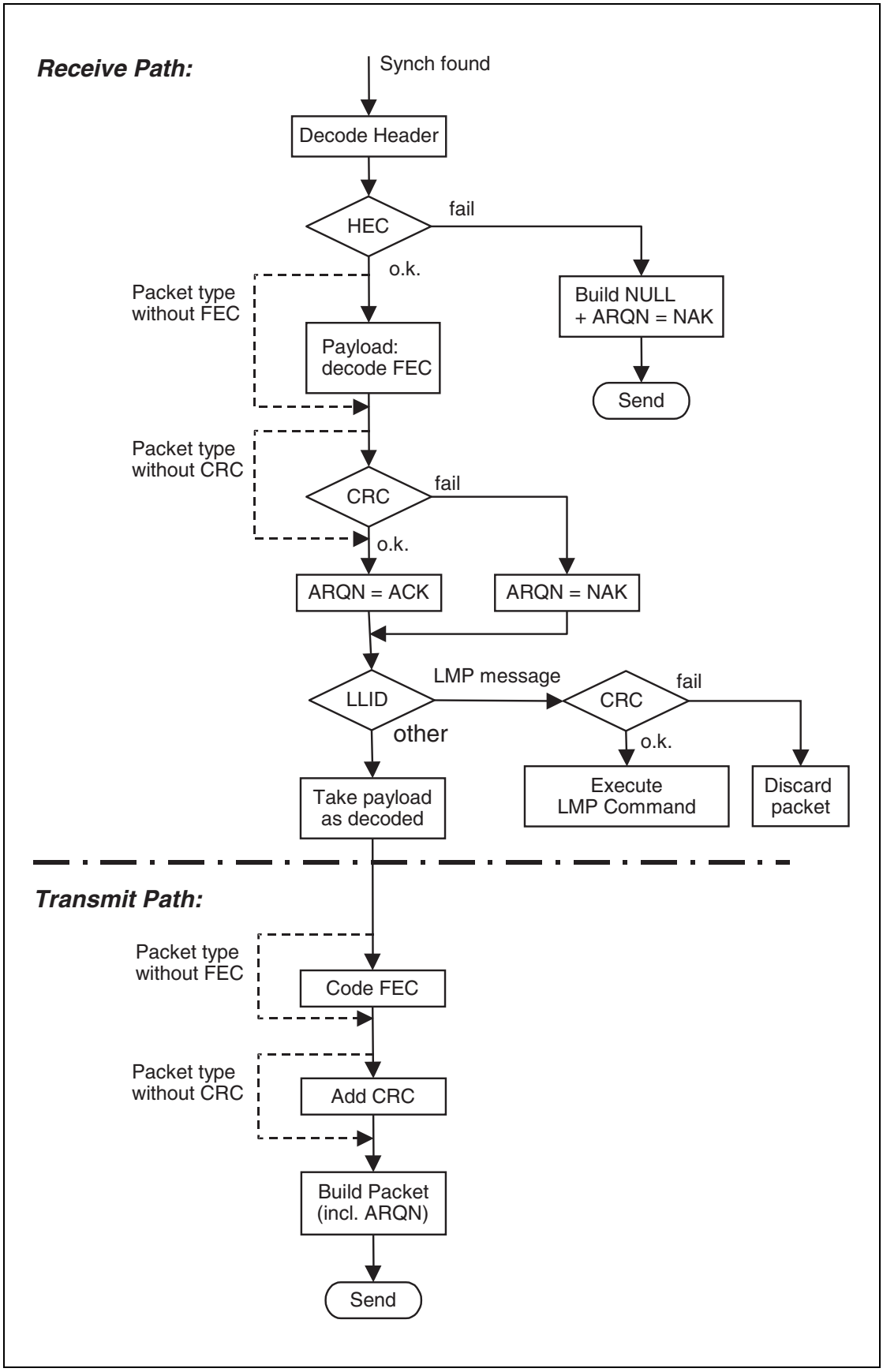

Figure 1.6: DUT Packet Handling in Loop Back Test

The timing for normal and delayed loopback is illustrated in Figure 1.7 to Figure 1.9:

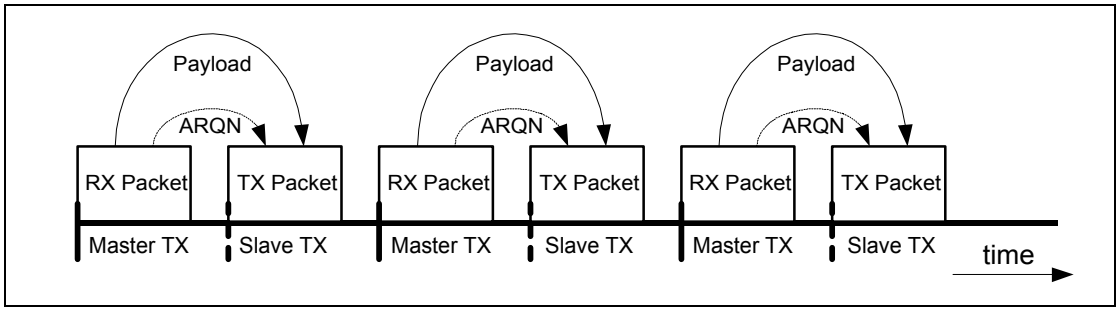

Figure 1.7: Payload & ARQN handling in normal loopback.

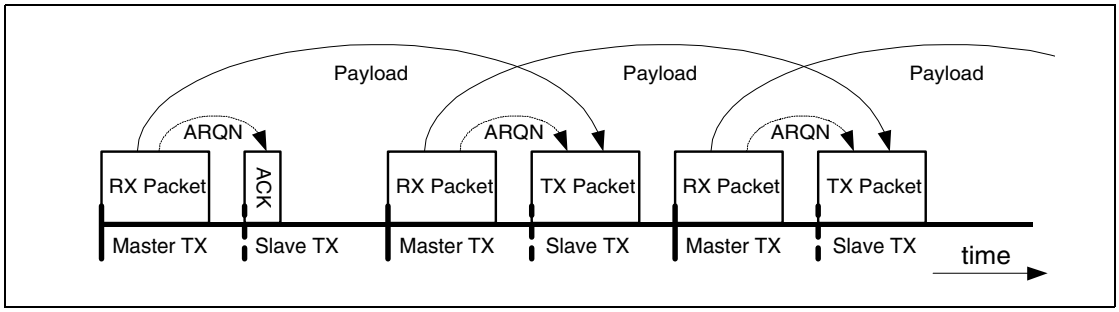

Figure 1.8: Payload & ARQN handling in delayed loopback - start.

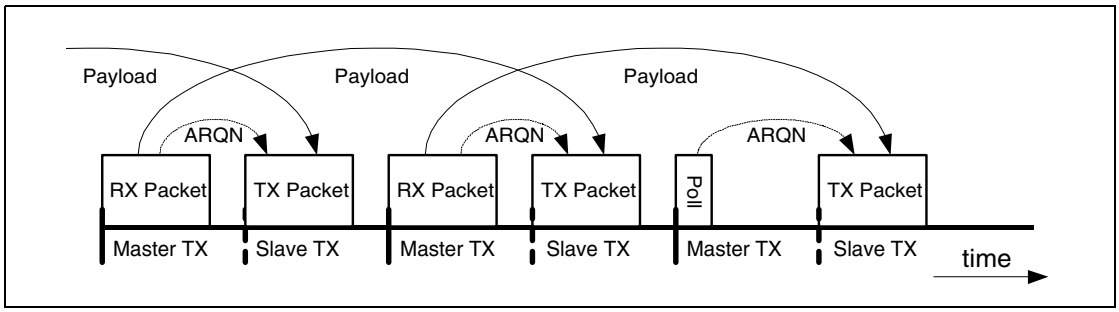

Figure 1.9: Payload & ARQN handling in delayed loopback - end.

The whitening is performed in the same way as it is used in normal active mode.

The following parameters can be set to configure the loop back test:

1. Packet Class[1]
   - ACL Packets
   - SCO Packets
   - eSCO Packets
   - ACL Packets without whitening

1. This is included because, in the future, the packet type numbering may not remain unambiguous.

- SCO Packets without whitening
- eSCO Packets without whitening

2. Frequency Selection
   - Single frequency (independent for RX and TX)
   - Normal hopping
3. Power level: (To be used according radio specification requirements)
   - power control or fixed TX power

The switch of the frequency setting is done exactly as for the transmitter test (see Section 1.1.2.5 on page 237).

1.1.4 Pause test

Pause test is used by testers to put the device under test into Pause Test mode from either the loopback or transmitter test modes.

When an LMP_test_control PDU that specifies Pause Test is received the DUT shall stop the current test and enter Pause Test mode. In the case of a transmitter test this means that no more packets shall be transmitted. While in Pause Test mode the DUT shall respond normally to POLL packets (i.e. responds with a NULL packet). The DUT shall also respond normally to all the LMP packets that are allowed in test mode.

When the test scenario is set to Pause Test all the other fields in the LMP_test_control PDU shall be ignored. There shall be no change in hopping scheme or whitening as a result of a request to pause test.

1.2 REFERENCES

[1] Bluetooth Link Manager Protocol.

[2] CCITT Recommendation O.153 (1992), Basic parameters for the measurement of error performance at bit rates below the primary rate.

[3] ITU-T Recommendation O.150 (1996), General requirements for instrumentation for performance measurements on digital transmission equipment.

[4] Bluetooth Baseband Specification.

2 TEST CONTROL INTERFACE (TCI)

This section describes the Bluetooth Test Control Interface (TCI). The TCI provides a uniform method of accessing the upper interface of the implementation being tested. This facilitates the use of a standardized interface on test equipment used for formal Qualification of implementations.

2.1 INTRODUCTION

2.1.1 Terms used

Conformance testing	Testing according to the applicable procedures given in the Bluetooth Protocol Test Specifications and the Bluetooth Profile Conformance Test Specification when tested against a test system.
HCI	Host Controller Interface
IUT	Implementation Under Test: An implementation of one or more Bluetooth protocols and profiles which is to be studied by testing. This term is used when describing the test concept for products and components equipped with Bluetooth wireless technology as defined in the PRD.
PRD	Bluetooth Qualification Program Reference Document: This document is maintained by the Bluetooth Qualification Review Board and is the reference to specify the functions, organisation and processes inside the Bluetooth Qualification program.
TCI	Test Control Interface: The interface and protocol used by the test equipment to send and receive messages to and from the upper interface of the IUT.

2.1.2 Usage of the interface

For all products and components equipped with Bluetooth wireless technology, conformance testing is used to verify the implemented functionality in the lower layers. Conformance testing of the lowest layers requires an upper tester to test the implementation sufficiently well.

In order to avoid that the tester will have to adapt to each and every product and component equipped with Bluetooth wireless technology, the use of the standardized TCI is mandated. This concept puts some burden upon the manufacturer of the IUT in terms of supplying an adapter providing the necessary conversion from/to the IUT's specific interface to the TCI. The adapter can consist of hardware, firmware and software. After qualification testing has been performed the TCI may be removed from the product or component equipped with Bluetooth wireless technology. It is the manufacturer's option to remove it from the qualified product or component equipped with Bluetooth wireless technology.

The TCI is used when qualifying the implemented functionality of the:

- Baseband layer, BB
- Link Manager layer, LM

If support of the Host Controller Interface is claimed by the manufacturer the TCI is used to qualify it.

2.2 TCI CONFIGURATIONS

This section describes the test configurations used when verifying the different Bluetooth requirements. Each layer in the Bluetooth stack is qualified using the procedures described in the layer specific test specification.

2.2.1 Bluetooth RF requirements

For qualification of the Bluetooth Radio Frequency requirements the defined Test Mode is used, see Section 1 on page 233.

Similar to TCI, the specific test mode functionality may be removed from the product or component after qualification, at the discretion of the manufacturer.

2.2.1.1 Required interfaces

For RF qualification only the air interface is required, see Figure 2.1. Depending on the physical design of the IUT it might be necessary to temporarily attach an RF connector for executing the RF tests. As stated in Section 1 on page 233, the Test Mode shall be locally enabled on the IUT for security reasons. The implementation of this local enabling is not subject to standardization.

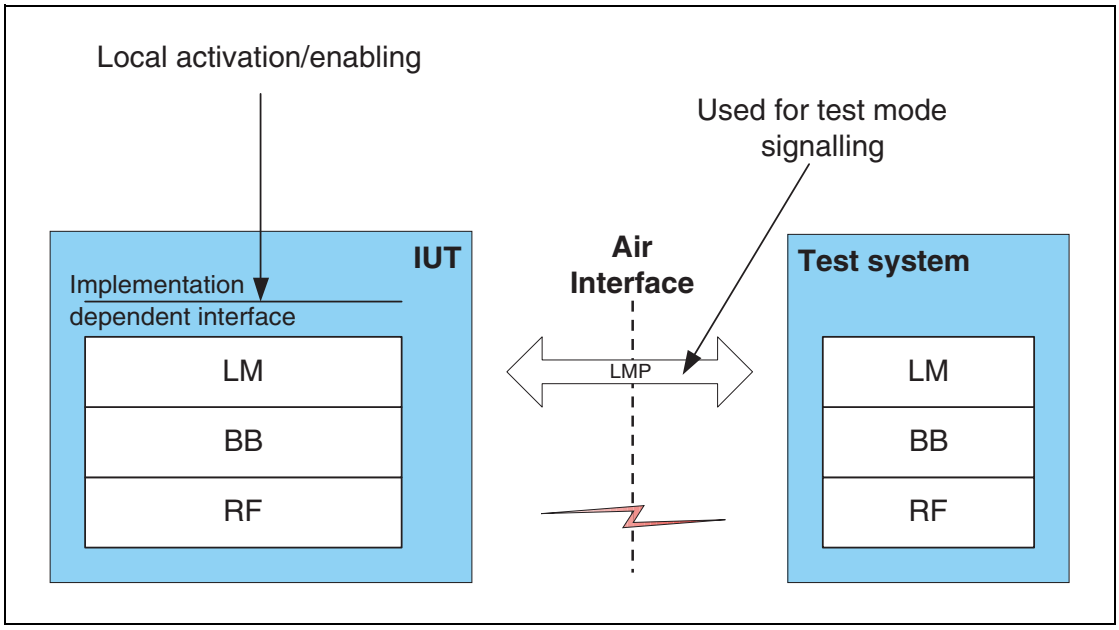

Figure 2.1: General test set-up for RF qualification

2.2.2 Bluetooth protocol requirements

Depending on which of the Bluetooth layers BB, LM or HCI are implemented in the product subject to qualification, the amount of testing needed to verify the Bluetooth protocol requirements differs. Also, the TCI used during the qualification is slightly different. The commands and events necessary for qualification are detailed in the test specifications and only those commands indicated in the test cases to be executed need be implemented.

For other protocols in the Bluetooth stack the TCI is not used. An implementation specific user interface is used to interact with the IUT's upper interface.

2.2.2.1 Required interfaces

For BB, LM and HCI qualification both the air interface of the IUT and the TCI are required. For other protocols both the air interface and the user interface are used as described in the test specification.

2.2.3 Bluetooth profile requirements

For each Bluetooth profile for which conformance is claimed, profile qualification testing is performed to verify the Bluetooth profile requirements. With higher layer protocols the TCI is not used during testing. A user interface specific to the implementation is used to interact with the IUT's upper interface.

2.2.3.1 Required interfaces

For this type of qualification both the air interface and the user interface of the IUT are used as described in the test specification.

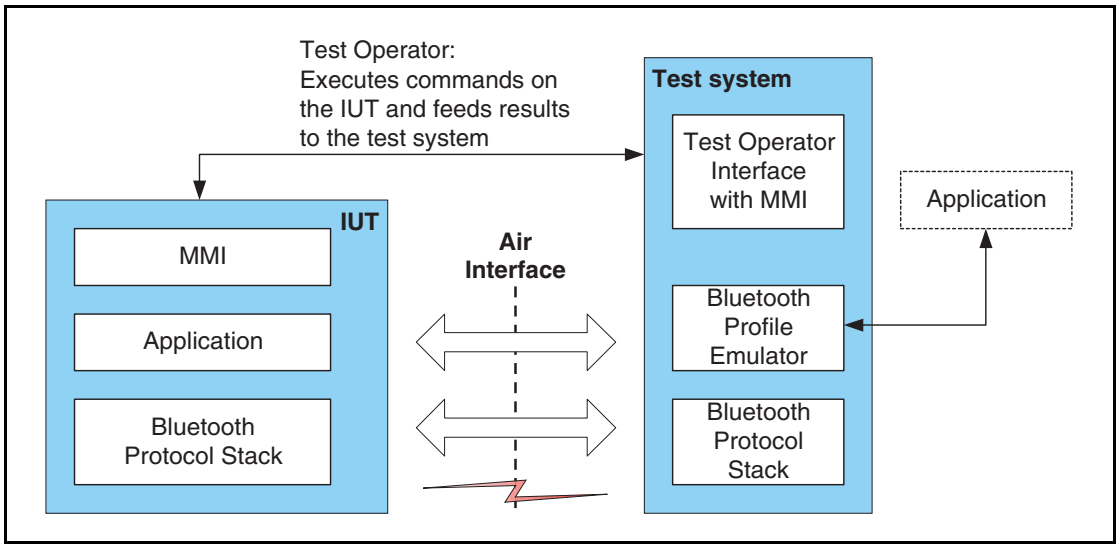

Figure 2.2: General test set-up for profile qualification

2.3 TCI CONFIGURATION AND USAGE

This interface is semantically and syntactically identical to the HCI interface described in "Host Controller Interface Functional Specification" on page 307[vol. 2]. The complete HCI interface is not required in the TCI, but the subset of HCI commands and events necessary for verifying the functionality of the IUT. The exact set of commands and events is specified in the test specifications for the layers subject to testing.

It is worth emphasizing again the TCI is an adapter, logically attached to the upper interface of the IUT. As such the TCI adapts the standardized signalling described here to the implementation specific interface of the IUT.

2.3.1 Transport layers

The method used to convey commands and events between the tester and the IUT's upper interface can be either physical bearer or "software bearer".

2.3.1.1 Physical bearer

It is recommended to use one of the transport layers specified for the HCI in. However, other physical bearers are not excluded and may be provided on test equipment. The use of a physical bearer is required for test cases active in category A. Please see the PRD for the definitions of test case categories. Please see the current active Test Case Reference List for the categorization of specific test cases.

2.3.1.2 Software bearer

There is no physical connection between the tester and the IUT's upper interface. In this case, the manufacturer of the IUT shall supply test software and hardware that can be operated by a test operator. The operator will receive instructions from the tester and will execute them on the IUT. The "software bearer" shall support the same functionality as if using the TCI with a physical bearer. Use of the "software bearer" shall be agreed upon between the manufacturer of the IUT and the test facility that performs the qualification tests. The test facilities can themselves specify requirements placed on such a "software bearer". Furthermore, the use of a "software bearer" is restricted to test cases active in one of the three lower categories B, C and D.

2.3.2 Baseband and link manager qualification

For the qualification of the link control part of the Baseband layer and for the Link Manager layer, the TCI is used as the interface between the test system and the upper interface of the IUT. The test system accesses the upper interface of the IUT by sending HCI commands and receiving HCI events from the IUT as described in the HCI specification. The required functionality on the TCI depends on the IUT's implemented functionality of the BB and LM layers, and therefore which test cases are executed.

A schematic example in Figure 2.3 shows the test configuration for BB and LM qualification of Bluetooth products which do not support HCI, and use a physical bearer for the TCI. In this example the Test Control (TC) Software represents what the manufacturer has to supply with the IUT when using an external test facility for qualification. The function of the TC Software is to adapt the implementation dependent interface to the TCI.

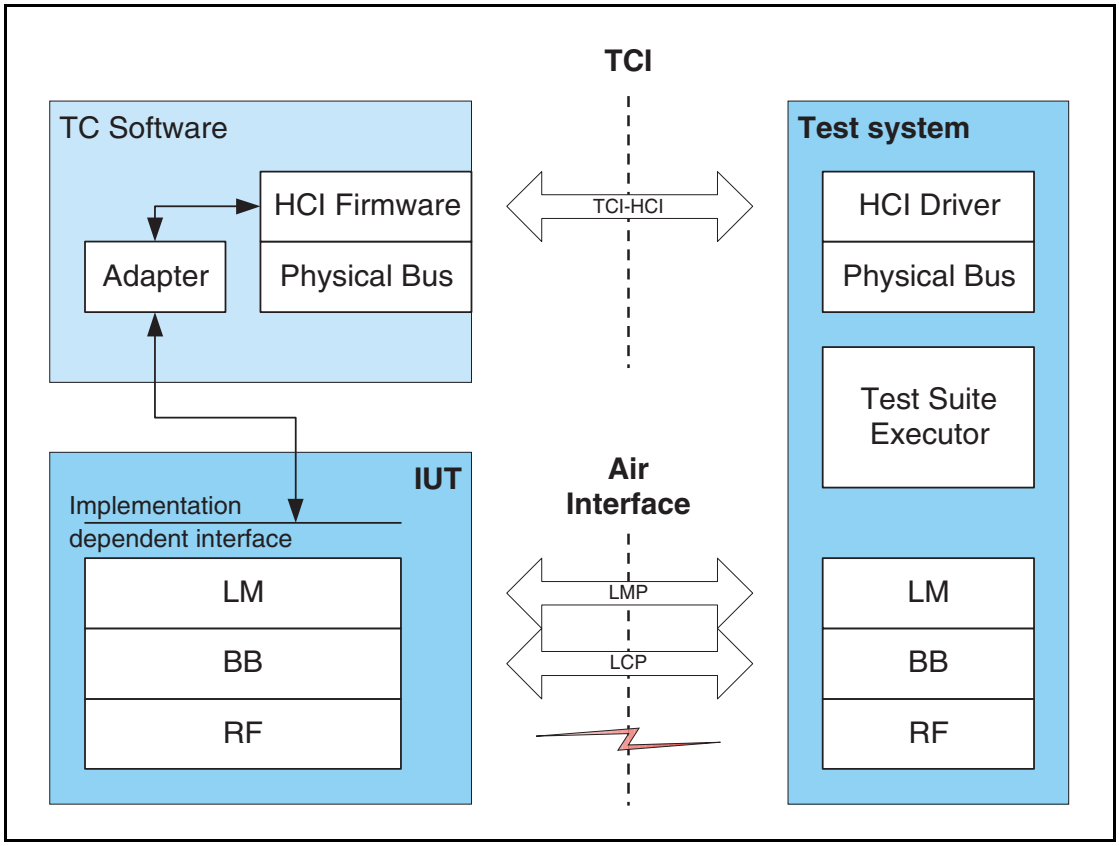

Figure 2.3: BB and LM qualification with TCI physical bearer

Figure 2.4 shows a schematic example of the test configuration for the same Bluetooth product using a “software bearer” for the TCI. Here the function of the Test Control Software is to represent the application that can be controlled by the test operator.

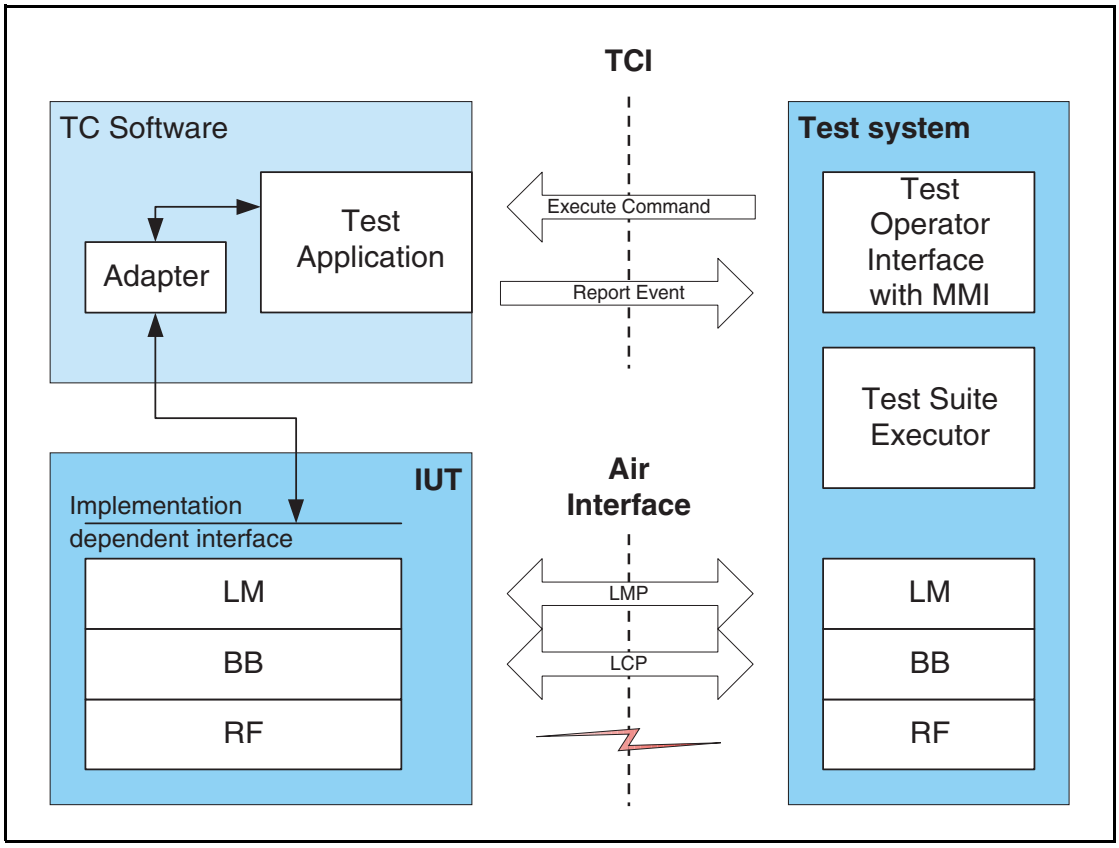

Figure 2.4: BB and LM qualification with “software bearer”

2.3.3 HCI qualification

The TCI may also be used for HCI signalling verification and qualification. The HCI signalling is only verified if support of the HCI functionality is claimed by the manufacturer.

A schematic example in Figure 2.5 shows the test configuration for HCI qualification of Bluetooth products. As can be seen in the figure the implemented HCI is used as the interface to the tester.

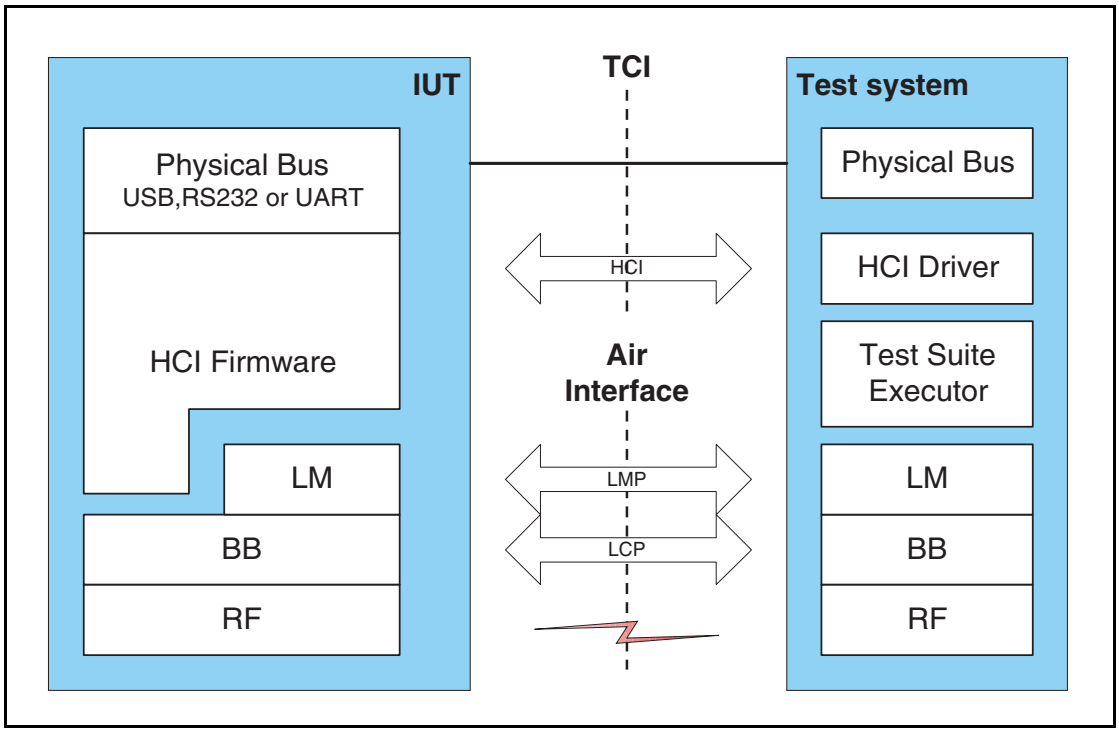

Figure 2.5: General test set-up for HCI qualification