6315 Seabrook Road Seabrook, Maryland 20706
phone: 301-459-7590, fax: 301-577-5575
internet: www.jsitel.com, e-mail: jsi@jsitel.com

September 28, 2004

Marlene H. Dortch, Secretary
Federal Communications Commission
445 Twelfth Street, S.W.
Washington, D.C. 205554

Re: CC Docket Nos. 01-92 and 95-116
Notice of *Ex Parte* Presentations

Dear Ms. Dortch:

On September 27th, 2004, Azita Sparano, Douglas Meredith and John Kuykendall of John Staurulakis, Inc. ("JSI") met with Daniel Gonzales, Senior Legal Advisor to Commission Kevin Martin on behalf of JSI's Rural Local Exchange Carrier ("RLEC") clients. In the meeting, the JSI representatives discussed the attached presentation pertaining to Sprint's Petition for Declaratory Ruling regarding rating and routing issues pending in CC Docket No. 01-92 and its impact on inter-modal number portability. The presentation is summarized below. Comments previously filed by JSI with the Commission that supported the presentation were also provided to attendee.[1]

After discussing the issues raised in Sprint's Petition, JSI demonstrated, as explained below, that existing rules do not support Sprint's claim.

---

[1] Comments previously filed by JSI with the Commission that were left with the attendees were Comments filed on August 8, 2002 regarding Sprint Petition for Declaratory Ruling in CC Docket No. 01-92 and Reply Comments filed on April 23, 2004 regarding ASAP Paging, Inc. Petition for Preemption of Public Utility Commission of Texas Concerning Retail Rating of Local Calls to CMRS Carriers in WC 04-6.

- The Commission has determined that a three-tiered hierarchy of escalating obligations for certain telecommunications carriers.[2] Accordingly, Section 251(c)(2) interconnection obligations are more stringent than those under Section 251(a). Section 251(c)(2) does not require an out of service area point of interconnection ("POI").[3] Consequently, Section 251(a) cannot require an out of service area POI.

- The Commission has found that the providing carrier is entitled to chose the method of interconnection: directly or indirectly for delivery of its originating calls to the other carrier's local numbers.[4] Nothing in the current rules entitle the requesting carrier to dictate direct or indirect method of interconnection based on its economic choice.

- Sprint incorrectly relies on Section 20.11(a), which was promulgated prior to the Telecommunications Act of 1996, to support its position that it is entitled to obtain an "indirect" connection for routing calls from the RLEC to Sprint.[5] Accordingly, it does not refer to the method of interconnection provided in Section 251 of the Act (direct or indirect connection), but instead references the type of direct interconnection deemed appropriate.

---

[2] *See In the Matter of Total Telecommunications Services, Inc. and Atlas Telephone Company, Inc, Complainants, v. AT&T Corporation: Memorandum Opinion and Order*, File No. E-97-003 at para. 25 (rel. Mar. 13, 2001).

[3] *Id. See* 47 C.F.R. § 51.305(a) ("An incumbent LEC shall provide, for the facilities and equipment of any requesting telecommunications carrier, interconnection with the incumbent LEC's network . . . (2) at any technically feasible point within the incumbent LEC's network . . .") (*emphasis supplied*).

[4] *See Implementation of the Local Competition Provisions in the Telecommunications Act of 1996: First Report and Order*, 11 FCC Rcd 15499, 15991 (1996) para. 997.

[5] 47 CFR § 20.11(a) ("A local exchange carrier must provide the type of interconnection reasonably requested by a mobile service licensee or carrier, within a reasonable time after the request, unless such interconnection is not technically feasible or economically reasonable") (*emphasis supplied*). *See also, The Need to Promote Competition and Efficient Use of Spectrum for Radio Common Carrier Services (Cellular Interconnection Proceeding): Memorandum Opinion and Order on Reconsideration*, 4 FCC Rcd 2369 (1989)

JSI then demonstrated that imposing financial obligations on RLECs for an out of service area routing point further increases the burdens on RLECs would be in violation to the Act. JSI called on the Commission to deny Sprint's Petition and clarify that a carrier's unilateral rating and routing designation for its numbering resources do not obligate an RLEC to honor such designations.

Respectfully submitted,

/s/ John Kuykendall

John Kuykendall
Director – Regulatory Affairs

Attachment

cc: Daniel Gonzales

SPRINT RATING & ROUTING PETITION CC Docket 01-92

Ex Parte Presentation

John Staurulakis, Inc.

September 2004

Sprint's Petition

- Sprint justifies its Petition as a "clarification" of existing rules
- The Petition is in fact a request to change existing Commission rules
- If Granted,
  - Additional network & financial (costs) obligations would be imposed on rural LECs (RLECs) in violation of the Act
  - Such financial burden on RLECs & their end user customers increases in magnitude due to LNP requirements

Sprint's Petition (Cont'd)

- Seeks affirmation of a non-existing rule that RLECs must honor rating and routing points unilaterally designated by other telecommunications carriers (CMRS carriers & CLECs)
- Sprint relies on its non-existing right to obtain *indirect* interconnection with RLECs for routing of RLEC originated calls to Sprint
- This request is nothing but an attempt by Sprint to impose its interconnection costs on RLECs

Sprint's Petition (Cont'd)

- Obtain numbers with rating point designation of an RLEC's rate center (*i.e.*, so calls from RLEC to Sprint numbers appear as local calls)
- Designate a routing point outside of RLEC's network
- Obligate the RLEC to assume network and financial responsibility of delivering calls from RLEC's network to the LATA tandem for delivery to Sprint

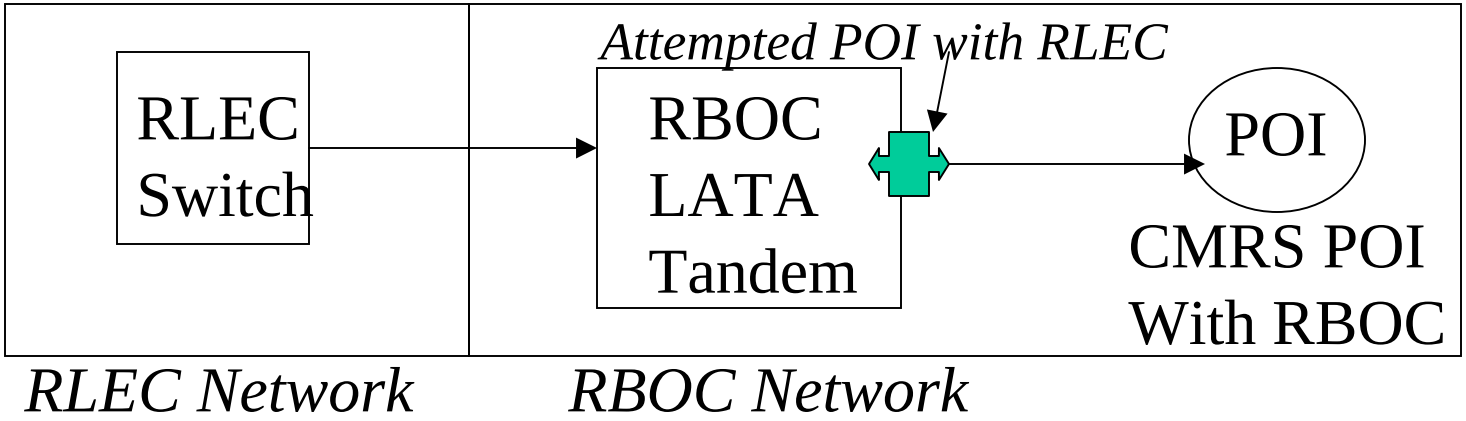

Existing Rules Do Not Support Sprint's Claim

- Section 251(c)(2) Interconnection obligations
  - Do not require an out of service area POI
  - Are more stringent than those under Section 251(a)
- Section 251(a) does not entitle requesting telecommunications carrier to choose *method* of interconnection based on its economic choice
- Sprint confuses *method* vs. *type* of interconnection

Section 251 Interconnection Obligations

- Section 251(c) – Additional Obligations of ILECs
- 47 CFR § 51.305 (a):

  "An incumbent LEC shall provide, for the facilities and equipment of any requesting telecommunications carrier, interconnection with the incumbent LEC's network…(2) at any technically feasible **point within the incumbent LEC's network**…"
- Section 251(c)(2) does not require an out of service area POI

Section 251 Interconnection Obligations

- Section 251(a) of the Act states,

  "All telecommunications carriers must interconnect *directly or indirectly* with the facilities and equipment of other telecommunications carriers."
- Providing carrier is entitled to choose *method* of interconnection: *Directly or Indirectly* for delivery of its originating calls to other carrier's local numbers
- Nothing in current rules entitle requesting carrier to choose between *direct or indirect method* of interconnection based on its economic choice

Interconnection Between CMRS Carriers & RBOCs

- CMRS Carriers obtain Section 251(c)(2) interconnection with RBOCs
  - Designate a POI within RBOC's network
  - Establish direct interconnection for exchange of traffic with RBOC

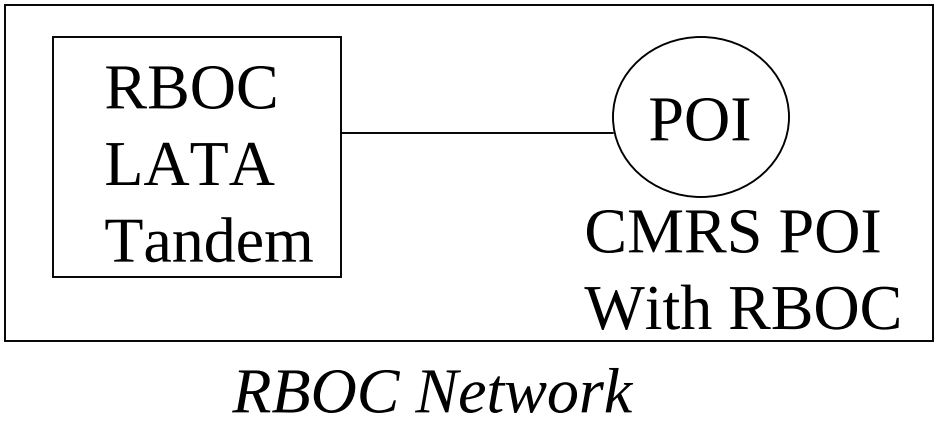

Interconnection Under Section 251(a)

- Direct Interconnection arrangement with RBOC LATA Tandem
  - Provides for LATA-wide termination of CMRS carrier's originating traffic
  - Creates indirect interconnection with subtending RLECs

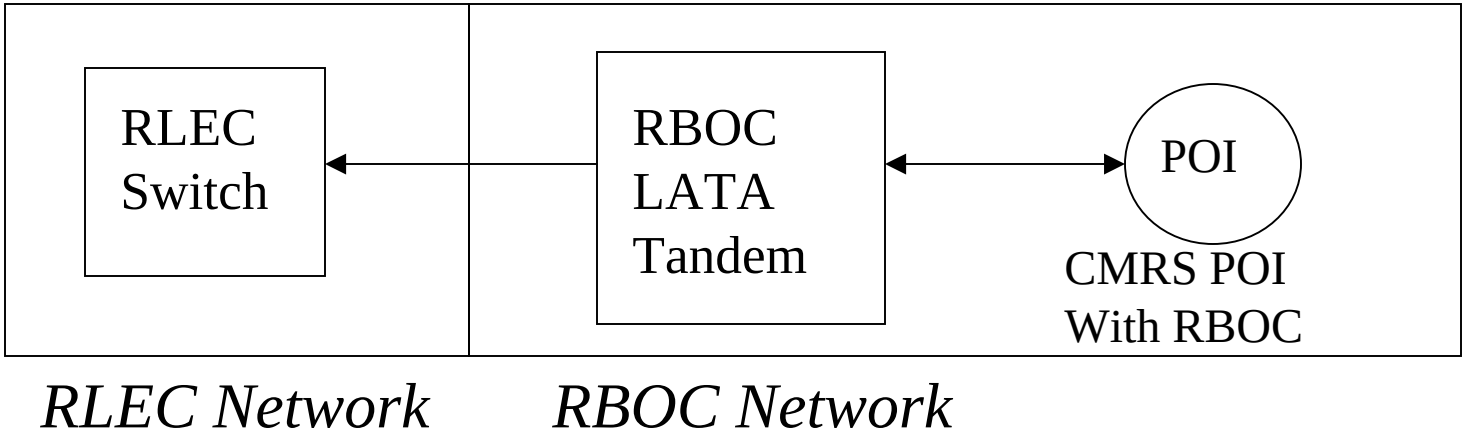

Change in Existing Rules Sought Under Sprint's Petition

- To entitle interconnecting carriers to designate an out of service area POI
- To impose interconnecting carrier's interconnection costs associated with the out of service area POI on RLECs

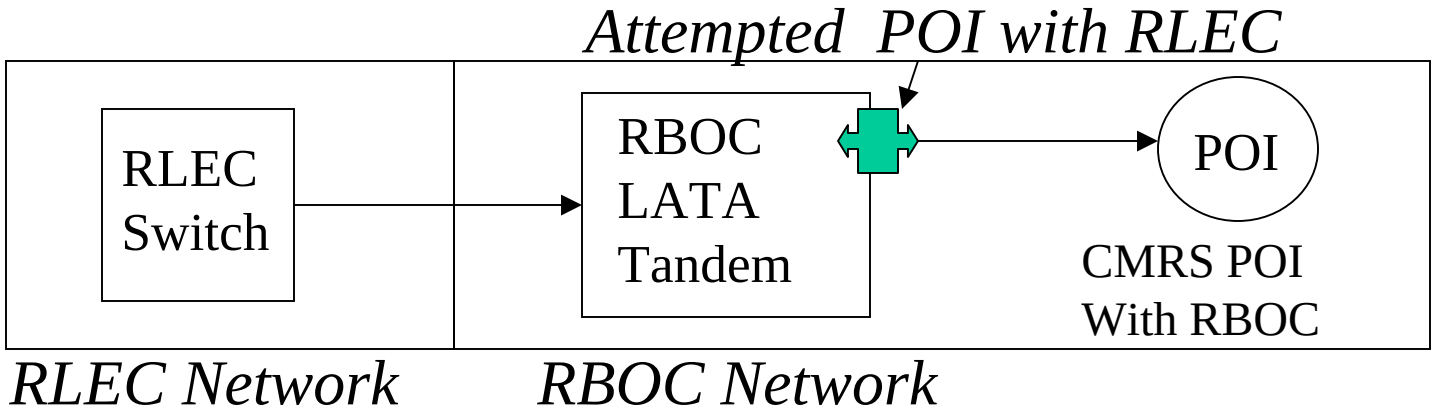

Sprint Confuses *Method* vs. *Type* of Interconnection

- Sprint incorrectly relies on its right to obtain *indirect* interconnection, based on its economic choice, citing Section 20.11(a)
- In pre-Act Cellular Proceedings, the Commission noted various *types* of interconnections (FCC 89-60, Report No. CL-379, Released March 15, 1989)
  - *Types* of interconnections are direct connections varying in technical specification & connection
  - End Office Connection: *Type* 1 or *Type* 2B
  - Tandem Connection: *Type* 2A

Sprint Confuses *Method* vs. *Type* of Interconnection (Cont'd)

- Section 20.11(a) was promulgated prior to the '96 Act – "A local exchange carrier must provide the *type* of interconnection reasonably requested by a mobile service licensee or carrier."
- *Method* of interconnection
  - *Direct* or *Indirect*
  - Provided for in Section 251(a) of '96 Act
- Pre-Act rule in Part 20.11(a) cannot be construed as referring to the *method* of interconnection provided for in the '96 Act

Inter-modal LNP Impact

- Imposing financial obligations on RLECs for an out of service area routing point further increases burden on RLECs' calls to ported numbers
- CMRS carriers generally assign a Location Routing Number (LRN) associated with the LATA tandem
- LRN designates the routing point for a ported number
- This Results in out of service area POI
- Commission noted concerns related to out of service area POI raised by parties in the Inter-modal LNP Order

Conclusion

- Commission should deny Sprint's Petition
  - RLECs do not have an obligation to route calls to other telecommunications carriers' numbers to an out of service area POI dictated by the carrier (*i.e.*, numbers that appear as local based on associated RLEC rate center designation by the carrier)
  - RLECs are not required to bear the cost associated with an out of service area POI
  - Creating such additional obligations would be in violation of the Act
- Commission should clarify that a carrier's unilateral rating and routing designation for its numbering resources do not obligate an RLEC to honor such designations