BELLSOUTH COMMENTS

WC Docket No. 04-313
CC Docket No. 01-338

October 4, 2004

Attachment 3

BEFORE THE
FEDERAL COMMUNICATIONS COMMISSION
WASHINGTON, D.C. 20544

In the Matter of	)	
	)	
Unbundled Access to Network Elements	)	WC Docket No. 04-313
	)	
Review of the Section 251 Unbundling Obligations of Incumbent Local Exchange Carriers	)	CC Docket No. 01-338

AFFIDAVIT OF W. KEITH MILNER

I, W. Keith Milner, being of lawful age, and duly sworn upon my oath, do hereby depose and state:

1. My name is W. Keith Milner. My business address is 675 West Peachtree Street, Atlanta, Georgia 30375. I am Assistant Vice President – Interconnection Operations for BellSouth. I have served in my present role since February 1996. My business career spans over 34 years and includes responsibilities in the areas of network planning, engineering, training, administration, and operations. I have held positions of responsibility with a local exchange company, a long distance company, and a research and development company. I have extensive experience in all phases of telecommunications network planning, deployment, and operations in both the domestic and international areas. I graduated from Fayetteville Technical Institute in Fayetteville, North Carolina in 1970, with an Associate of Applied Science in Business Administration degree. I obtained a Master of Business Administration degree from Georgia State University in Atlanta, Georgia in 1992.

2. I will address three (3) topics within this Affidavit. The first purpose of this Affidavit is to provide the Federal Communications Commission ("Commission") with information concerning BellSouth's provision of loops when the customer is served by equipment referred to as Integrated Digital Loop Carrier ("IDLC"). In its *Order and Notice of Proposed Rulemaking* released August 20, 2004, this Commission sought comment "...on whether and how we should clarify our rules regarding access to customers served by integrated digital loop carrier equipment in a manner that promotes facilities-based deployment." [Footnote 38]. Second, this Affidavit will respond to Competitive Local Exchange Carriers' ("CLECs'") claims that the switches they own are not suited for serving mass market customers because of either (1) the need to outfit an existing long distance toll switch for local service capabilities or (2) the need to provide analog line capacity. Third, I will discuss the manner in which carriers construct fiber optic transmission systems and how varying capacity levels are derived which allows the carrier to offer a variety of high capacity transmission services operating at DS-1 and higher transmission levels. In this third portion of my Affidavit, I will also discuss the quantity of fiber optic strands carriers typically deploy and how that deployment choice provides for spare fiber optic strands that may be used for the deploying carrier's future needs or may be provided to other carriers as so-called "dark fiber".

Integrated Digital Loop Carrier ("IDLC")

3. As will be explained in the following paragraphs, BellSouth makes all of its loops available to CLECs and does so in a non-discriminatory manner. BellSouth's provisioning methods and other policies regarding unbundled loops provided via IDLC

equipment promote facilities-based local deployment and competition. Consequently, the Commission should refrain from further rulemaking in this subject area.

4. IDLC is a special version of Digital Loop Carrier ("DLC") that does not require a host terminal in the central office (sometimes referred to as the Central Office Terminal or "COT") to disaggregate the multiplexed individual loops, but instead terminates the digital transmission facilities directly into the central office switch. In its *Texas 271 Decision*, this Commission found that "the BOC must provide competitors with access to unbundled loops regardless of whether the BOC uses integrated digital loop carrier (IDLC) technology or similar remote concentration devices for the particular loops sought by the competitor." Memorandum Opinion and Order, *Application by SBC Communications Inc., et al., Pursuant to Section 271 of Telecommunications Act of 1996 to Provide In-Region, InterLATA Services in Texas*, 15 FCC Rcd 18354, ¶ 248 (2000) ("*Texas Order*").

5. BellSouth provides access to such IDLC loops via the following methods:

   Alternative 1: If sufficient physical copper pairs are available, BellSouth will reassign the loop from the IDLC system to a physical copper pair.

   Alternative 2: Where the loops are served by Next Generation Digital Loop Carrier ("NGDLC") systems, BellSouth will "groom" the integrated loops to form a virtual Remote Terminal ("RT") arranged for universal service (that is, a terminal which can accommodate both switched and private line circuits).

"Grooming" is the process of arranging certain loops (in the input stage of the NGDLC) in such a way that discrete groups of multiplexed loops may be assigned to transmission facilities (in the output stage of the NGDLC). Both of the NGDLC systems currently approved for use in BellSouth's network have "grooming" capabilities.

Alternative 3: BellSouth will remove the loop distribution pair from the IDLC and re-terminate the pair to either a spare metallic loop feeder pair (copper pair) or to spare Universal Digital Loop Carrier ("UDLC") equipment. For two-wire Integrated Services Digital Network ("ISDN") loops, the UDLC facilities will be made available through the use of Conklin BRITEmux or Fitel-PMX 8uMux equipment.

Alternative 4: BellSouth will remove the loop distribution pair from the IDLC and re-terminate the pair to utilize spare capacity of existing Integrated Network Access ("INA") systems or other existing IDLC that terminates on Digital Cross-connect System ("DCS") equipment. BellSouth will thereby route the requested unbundled loop channel to a channel bank where it can be de-multiplexed for delivery to the requesting CLEC.

Alternative 5: When IDLC terminates at a switch peripheral that is capable of serving "side-door/hairpin" capabilities, BellSouth will utilize this switch functionality. The loop will remain terminated directly into the switch while the

"side-door/hairpin" capabilities allow the loop to be provided individually to the requesting CLEC.

Alternative 6: If a given IDLC system is not served by a switch peripheral that is capable of side-door/hairpin functionality, BellSouth will move the IDLC system to switch peripheral equipment that is side-door/hairpin capable.

Alternative 7: BellSouth will install and activate new UDLC facilities or NGDLC facilities and then move the requested loop from the IDLC to these new facilities. In the case of UDLC, if growth will trigger activation of additional capacity within two years, BellSouth will activate new UDLC capacity to the distribution area. In the case of NGDLC, if channel banks are available for growth in the CSA, BellSouth will activate NGDLC unless the DLC enclosure is a cabinet already wired for older vintage DLC systems.

Alternative 8: When it is expected that growth will not create the need for additional capacity within the next two years, BellSouth will convert some existing IDLC capacity to UDLC.

6. Rarely, a given loop may be unbundled only by the exercise of Alterative 7 or 8 as described above. In that scenario, which BellSouth anticipates occurring very infrequently, BellSouth will provide the CLEC two (2) choices – the CLEC may pay special construction charges to build the necessary facilities, or BellSouth will provide

the CLEC a Unbundled Network Element Platform ("UNE-P") at the Total Element Long Run Incremental Cost ("TELRIC") rate. BellSouth only will make the second of these options available in those areas in which it receives relief from unbundled switching.

7. This Commission, as well as all nine (9) of the Public Service Commissions in BellSouth's nine-state region, considered and approved these eight (8) alternatives for providing unbundled loops served via IDLC during BellSouth's Section 271 applications.

8. To summarize this portion of my Affidavit, BellSouth makes all of its loops, including those served by IDLC, available to CLECs on an unbundled basis. In cases where special construction charges would otherwise be assessed to a CLEC (that is, should circumstances require the use of Alternatives 7 or 8 described above), for those areas in which BellSouth receives relief from unbundled switching, BellSouth gives the CLEC the choice of paying the special construction charges and acquiring the unbundled loop, or electing to serve the customer via the UNE-P. BellSouth's provisioning methods and other policies regarding unbundled loops provided via IDLC equipment promote facilities-based local deployment and competition, and the Commission should refrain from further rulemaking in this subject area.

Switching Considerations

9. In evaluating the level of alternative switching deployment, CLECs in past proceedings have asserted that equipping certain switches that are primarily used to provide long distance service to large business customers to enable the provision of local service

would be difficult. For instance, in FL Docket No. 030851-TP, AT&T's Supplemental Response to BellSouth's Interrogatory No. 1 (filed November 24, 2003) asserted that converting what AT&T refers to as edge switches "would require extensive hardware modifications, software modifications, and E911 Connectivity, as well as supporting OSS modifications and connectivity. As a practical matter, the modifications required precludes conversion of these switches."

10. In addition, others have variously described switches as "enterprise switches" implying that these switches are not suitable, nor could they be made suitable, for handling mass market end users. I disagree with the suggestion that switching equipment falls exclusively into any single categorization. Instead, modern switching systems rely heavily on software to control an array of hardware elements to effect the desired functionality (that is, local end office switching, local or toll tandem switching, etc.).

11. I believe manufacturers' statements regarding the capabilities of the products they produce and sell dispel any suggestion that long distance "edge switches" cannot be efficiently converted to handle local traffic. For example, a visit to Nortel's website yields a description of its DMS portfolio of switching system as follows:

> The Nortel Networks world-class DMS portfolio is a family of proven, fully digital circuit switches that deliver superior local exchange and long distance services worldwide.

Whether it's a small-to-medium application, a large local switching network, a high-capacity long-distance tandem interexchange system, or a total solution that combines local and long distance services, the proven Nortel Networks DMS portfolio can meet and exceed your needs.

Our state-of-the-art switches provide the technology you need today and can be reused as your network migrates from circuit to packet, allowing you to maximize your network investment well into the future.
[http://www.nortelnetworks.com/products/01/dms/index.html]

12. Likewise, on its website, Lucent Technologies describes its 5ESS product line as follows:

The reliability of the *5ESS* switch design is proven every day on approximately 6,000 host switches in more than 66 countries. According to analyses in U.S. FCC quality reports, the *5ESS* switch is the only switch that has achieved 99.9999 percent availability for six consecutive years. The unique architecture of the *5ESS* switch enables modular upgrades and implementation of multiple services on one switch, providing strong economies of scale in training, management, and spares. The switch uses industry standard interfaces to ensure interoperability. Fully functioning Standalone Remote Switches, including the 5E-XC Remote Line Unit, can be located up to 2,000 miles from the host switch. As a result, you can pursue business and network strategies without locking your company into a specific technology and without interrupting current services.

[http://www.lucent.com/products/solution/0,,CTID+2014-STID+10450-SOID+1448-LOCL+1,00.html]

13. Thus, it is quite clear that the two (2) switch types that are currently deployed by AT&T are, according to their respective manufacturers, modular, expandable and capable of handling a variety of traffic types and service needs.

14. In its Interrogatory Response, AT&T explained that it uses the Lucent 5ESS and Nortel DMS switches principally as long distance toll switches. In the Florida Public Service Commission's Docket No. 000731-TP, AT&T witness David Talbott testified that "AT&T offers local exchange service in Florida via 4ESS switches, which function primarily as long distance switches, and 5ESS switches, which act as adjuncts to the 4ESS switches." I understand Mr. Talbott's statement to mean that AT&T has installed Lucent 5ESS switches to provide local functionality when used in connection with an associated 4ESS switch. The 4ESS switch provides connectivity to other switches and networks, trunk groups and the like.

15. In its Interrogatory Response, AT&T states, "Only the basic 5ESS and DMS platform (equipment racks, containers/cabinets, and some switch modules) could be reused." AT&T's assertion in its Interrogatory Response is directly at odds with Mr. Talbott's statement in Docket No. 000731-TP and with what the manufacturers of those two switching systems (that is Lucent and Nortel) claim as their respective products' capabilities. Apparently AT&T agrees that at least some of the 5ESS and DMS equipment could be used were AT&T to elect to convert an existing long distance switch

to also handle local traffic but asserts that "Only the basic … platform … could be reused." AT&T then lists work activities required to convert a long distance toll switch to a combined long distance toll switch / local switch. While AT&T apparently places much emphasis on its list of ten (10) work activities, AT&T does not claim that such work is technically infeasible nor does AT&T provide any support for its claim that "As a practical matter, the modifications required *precludes* conversion of these switches." (emphasis added).

16. Moreover, as a threshold matter, AT&T is in the somewhat enviable position of having its long distance switches already widely deployed along with required infrastructure such as building space, power systems including backup power plants, cable racking and the like. Indeed, the "basic 5ESS and DMS platform" to which AT&T refers is likely the central processing equipment and time-switching network that is the backbone of any modern switching system. Said another way, compared to CLECs that have built their switching networks from scratch, AT&T has only to add unique line-side equipment to its existing "edge switches" along with software for customer features and test and call processing equipment for the conversions it claims are precluded. The Commission should not entertain any claims that these modifications preclude conversion of long distance switches to local switches.

17. CLECs have also claimed their respective switches are equipped for only digital interfaces on the "line side" and that such a configuration while allowing service provision to some end users (that is, those end users to whom a CLEC provides a DS-1 or

higher level loop transmission facilities) does not allow the CLEC to provide service to so-called "mass market" customers. I disagree with such an assertion. There appears to be no disagreement that CLECs can and do use their respective switches to handle so-called enterprise customers. My understanding is that those end users are served via digital loop facilities operating at DS-1 or higher transmission levels. If higher than DS-1 transport facilities are used to serve a given end users, multiplexing equipment is used to extract particular DS-1 data streams for connection to the CLEC's switch. This is depicted in Exhibit WKM–1 to this Affidavit. In addition to this scenario (that is, using DS-1 or higher level loops to serve enterprise customers) it is also possible to transport loops serving mass market customers over digital transmission facilities and to attach those digitized loops to the CLEC's switch without the use of analog line interfacing equipment in the CLEC's switch location. In the following paragraphs, I will discuss two (2) different serving arrangements that allow a CLEC to serve mass market end users while not requiring analog line interfaces at the CLEC's switch. The first such arrangement makes use of DLC equipment in the CLEC's collocation arrangement within an incumbent's central office. The second such arrangement makes use of multiplexing equipment in the CLEC's collocation arrangement within an incumbent's central office. These arrangements simply do not rise to the level of "substantial modifications."

18. In the first arrangement, a CLEC would request and the Incumbent Local Exchange Carrier ("ILEC") would provide voice grade unbundled loops serving given end users. For purposes of explanation, assume a CLEC elects to serve only mass market customers each of whom has either one or two lines installed. As is shown in Exhibit WKM–2 to

this Affidavit, individual unbundled loops serving those mass market customers would be extended to the CLEC's collocation arrangement. Within the collocation arrangement, the CLEC would install a DLC Remote Terminal to which the individual unbundled loops would be attached. In addition to other functions the DLC performs, the individual unbundled loops would be digitized and multiplexed onto digital transmission facilities (at DS-1 or higher levels) extending to the location where the CLEC's switch is installed. At that location, the DS-1 facilities carrying the individual loops would either be demultiplexed back to individual loops in the case of non-integrated or "universal" DLC ("UDLC") or would be conveyed directly into the switch without intervening demultiplexing in the case of IDLC. Were the CLEC to choose UDLC, then analog line interfacing equipment would be required for those loops to be connected to the CLEC's switch. However, if the CLEC were to choose the more modern IDLC, which I would expect would be their overwhelming choice, then no analog line capacity would be required since the DS-1 facility carrying the unbundled loops is not demultiplexed prior to connection to the switch.

19. In the second arrangement, a CLEC would request and the ILEC would provide voice grade unbundled loops serving given end users. Here again, assume a CLEC elects to serve only mass market customers each of whom has either one (1) or two (2) lines installed. As is shown in Exhibit WKM–3 to this Affidavit, individual unbundled loops serving those mass market customers would be extended to the CLEC's collocation arrangement. Within the collocation arrangement, the CLEC would install digitizing equipment referred as digital channel banks (sometimes referred to as D4 channel bank

equipment). The D4 channel bank allows up to 24 voice grade channels to be digitized and multiplexed onto a DS-1 transmission facility. If multiple DS-1 transmission facilities are required, the CLEC would also install within its collocation arrangement equipment referred to as a multiplexer to which the digitized unbundled loops (that is, the DS-1 stream(s) from the D4 channel bank(s) would be attached. The individual DS-1 streams would then be multiplexed onto higher level digital transmission facilities (that is, at DS-3 or higher levels) extending to the location where the CLEC's switch is installed. A number of vendors manufacture channel banks that provide a TR-008 interface that can be directly connected to a switch. AFC and Adtran are two (2) such vendors. At that location, the transmission facilities carrying the individual loops would either be demultiplexed back to individual loops or would be conveyed directly into the switch without intervening demultiplexing. Were the CLEC to choose to demultiplex the individual loops, then analog line capacity would be required. However, if the CLEC were to choose to integrate the multiplexed loops within the DS-1 facility directly to the switch, which is technically feasible and which I would expect would be their overwhelming choice, then here again no analog line capacity would be required since the DS-1 facility carrying the unbundled loops is not demultiplexed prior to connection to the switch.

20. To summarize this portion of my Affidavit, technical means are available today that would obviate the need for a CLEC to provide analog line capacity in its switching system because even individual mass market loops could be tied to the CLEC's switch on a digital rather than on an analog basis.

CLEC Fiber Optic Network Considerations

21. CLECs self-provide high-capacity facilities by deploying their own fiber optic networks, and have done so for years. The term "high capacity facilities" is generally used to refer to transmission systems operating at the DS-1 transmission level (that is, 1.544 megabits per second) and higher. CLECs typically use high capacity facilities to serve medium to large business customers (as well as to provide service to other telecommunications carriers).

22. At locations where CLECs have deployed fiber optic facilities, those facilities can be used to provide high-capacity services to customers at transmission levels of DS-1 and higher. This is because CLECs typically deploy fiber optic facilities that can operate at a range of capacities. The ultimate capacity of the installed fiber optic facilities is usually limited by the electronic equipment (lasers, multiplexers, etc.) attached to the ends of the fiber optic strands rather than being limited by the throughput of the fiber optic strands. Thus, once installed, a CLEC's fiber optic facilities are operationally ready to provide DS-1, DS-3, or higher loop and transport services.

23. When deploying fiber optic facilities, CLECs typically deploy Synchronous Optical Network ("SONET") based, high-capacity Optical Carrier ("OCn") facilities. The term "OCn" refers to Optical Carrier transmission systems where "n" designates the optical carrier level achieved (that is, OC12, OC48, etc.). OCn can be thought of as a reference to the quantity of DS-3 capacity units (roughly 45 megabit per second transmission paths)

the system is capable of handling simultaneously. For example, OC48 systems provide capacity for 48 individual DS-3 transmission "pipes".

24. The CLEC's goal, as with all facilities-based telecommunications carriers, is to ensure that there will always be enough available bandwidth to serve a particular geographic area. Once the fiber optic cables themselves are installed and ready, the CLEC attaches electronics to subdivide (or "channelize") the available capacity, activating the amount of capacity and number of channels needed along the loop or route. The electronics used to perform this channelization of OCn facilities into DS-1 or DS-3 facilities are relatively inexpensive, are widely available, and can be quickly installed whenever the carrier has demand for DS-1 or DS-3 facilities. The channelizing equipment is widely used by CLECs such as AT&T, MCI, and others.

25. Because any CLEC with a fiber optic network is able to provide high capacity services to any customer at capacities from DS-1 and higher by simply attaching relatively-inexpensive electronics to the fiber optic cables, it is inappropriate to examine impairment on a bandwidth-specific basis. In other words, the Commission cannot and should not determine that a CLEC is impaired without unbundled access to DS-1 loops, for example, by ignoring the other high capacity facilities that a CLEC can provide using that same fiber optic network.

26. Furthermore, for network engineering reasons and based on the cost structure of fiber optic cables and associated infrastructure costs (that is, costs for rights-of-way, poles,

ducts and conduits, etc.), it is common that at the time of initial cable deployment, a carrier will place cables with additional, spare fiber optic strands in anticipation of future needs. Since the costs of deploying a fiber optic cable are mostly fixed (e.g., trenching or burying the cable, attaching cable to poles, etc.) and correlated less so with the number of fiber optic strands in the cable, carriers typically deploy a considerably larger number of strands than what they need for their immediate transmission needs. In fact, although generally four (4) fiber strands are enough to support OCn circuits (that is, a transmit and receive strand in both the active and standby routes), those four (4) fiber optic strands (once the associated electronics are installed and ready) can provide enough capacity for virtually any route. For example, a single OC192 system (operating over four (4) fiber optic strands) has capacity for 192 DS-3 transmission paths , or 129,024 simultaneous voice conversations (that is, 192 * 672). Moreover, and this capacity can be multiplied several times over with the use of Dense Wave Division Multiplexing ("DWDM") technology. CLECs typically deploy 144 or more fiber optic strands when extending a cable to large commercial buildings or to ILEC central offices. BellSouth typically sizes its fiber optic cables in this manner and as a result is frequently able to provide dark fiber (that is, fiber optic strands without electronics attached) to CLECs upon request.

27. To summarize this portion of my Affidavit, the capacity of modern fiber optic transmission systems is largely a function of the type of electronic equipment attached to the fiber optic cables. This means that once constructed, a fiber optic transmission system is capable of concurrently delivering high capacity services operating at DS-1 and higher transmission levels. When carriers construct their respective networks, efficient

carriers do not simply places facilities only for the demand present at the time of the installation. Instead, demand for future needs is taken into account such that the efficient carrier does not later incur significant additional construction costs to place additional fiber optic cables. Given the manner in which fiber optic facilities are deployed and utilized, the Commission should recognize that dark fiber is available within many if not most of the fiber optic systems the CLECs have placed and that carriers cannot be impaired without access to dark fiber where no impairment for high-capacity services exists. Spare capacity is very often available and, if allowed to operate freely, market forces will entice competitive carriers to offer that capacity on a wholesale basis to other carriers.

28. Further, the Affiant sayeth naught.

I declare under penalty of perjury that the foregoing is true and correct to the best of my knowledge.

W. Keith Milner
Assistant Vice President
Interconnection Operations

Subscribed and sworn to before me

This 4th day of October, 2004

Notary Public

Gay P. Diz
Notary Public, DeKalb County
Georgia
My Commission Expires
February 09, 2007

WC Docket No. 04-313
CC Docket No. 01-338

Milner Affidavit

Exhibit WKM – 1

CLEC Switch Interface Arrangements to Accommodate Voice Grade Unbundled Loops

BellSouth Telecommunications, Inc.
Exhibit WKM-1

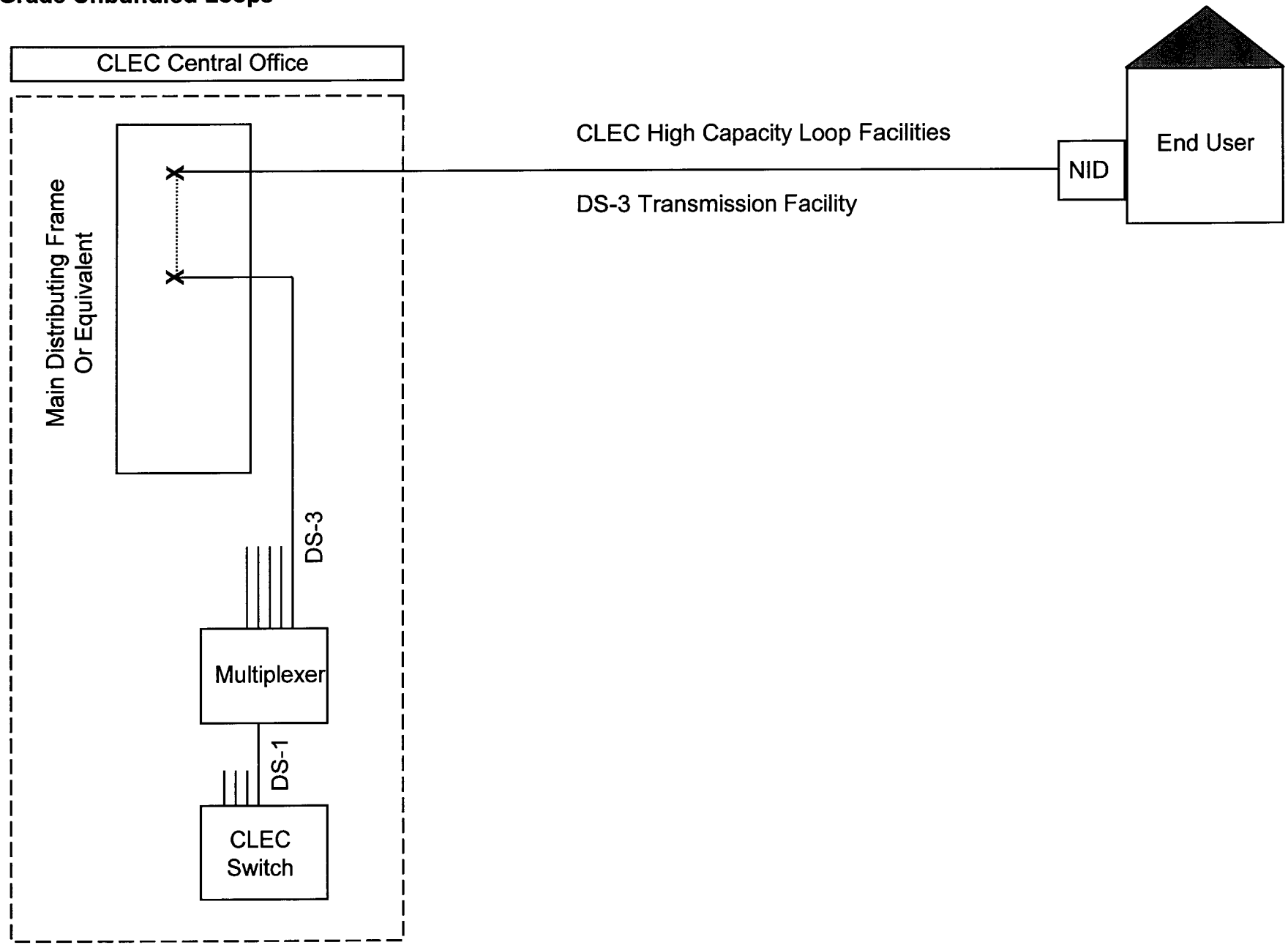

WC Docket No. 04-313
CC Docket No. 01-338

Milner Affidavit

Exhibit WKM – 2

CLEC Switch Interface Arrangements to Accommodate Voice Grade Unbundled Loops

BellSouth Telecommunications, Inc.
Exhibit WKM-2

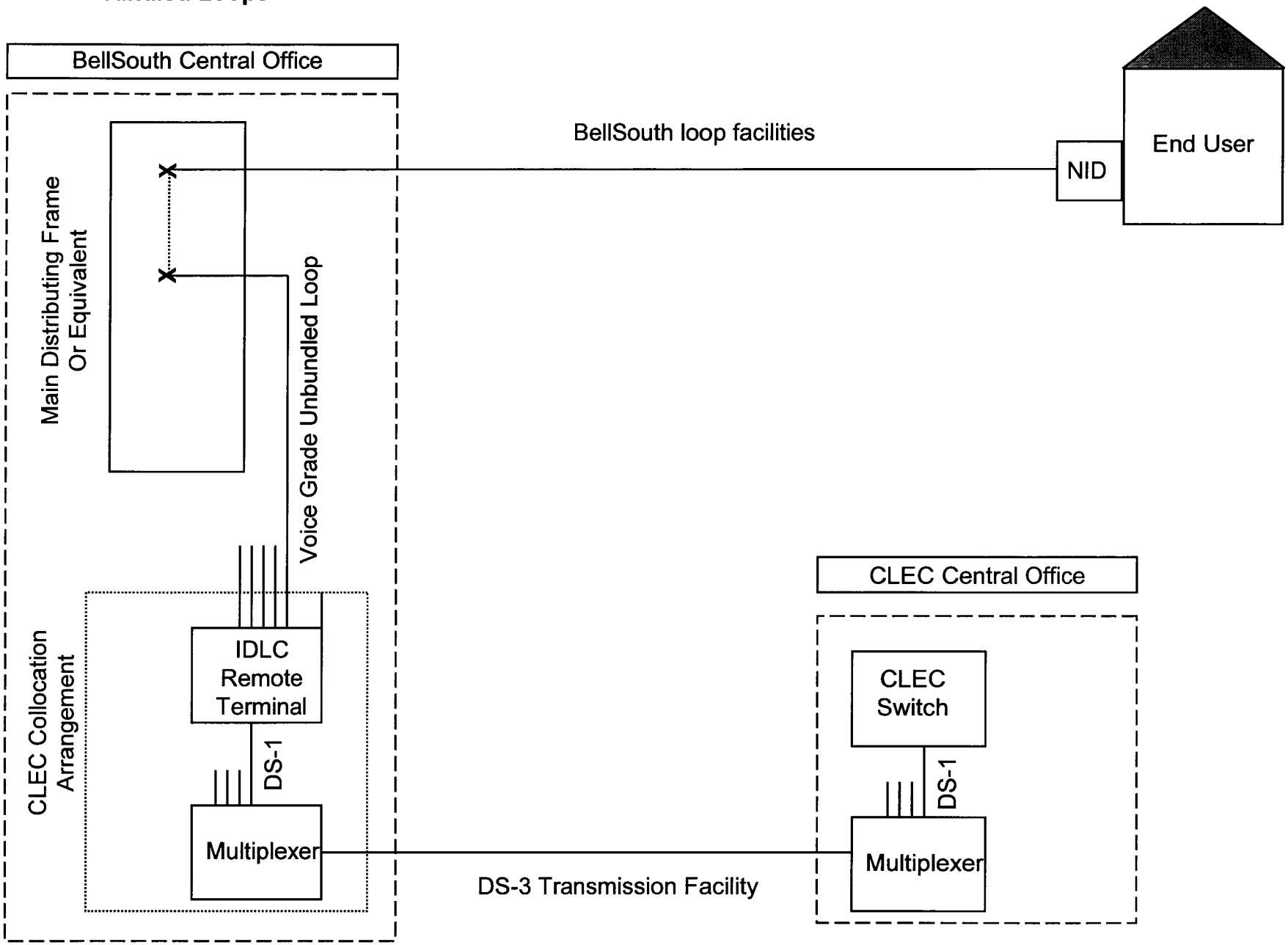

WC Docket No. 04-313
CC Docket No. 01-338

Milner Affidavit

Exhibit WKM – 3

CLEC Switch Interface Arrangements to Accommodate Voice Grade Unbundled Loops
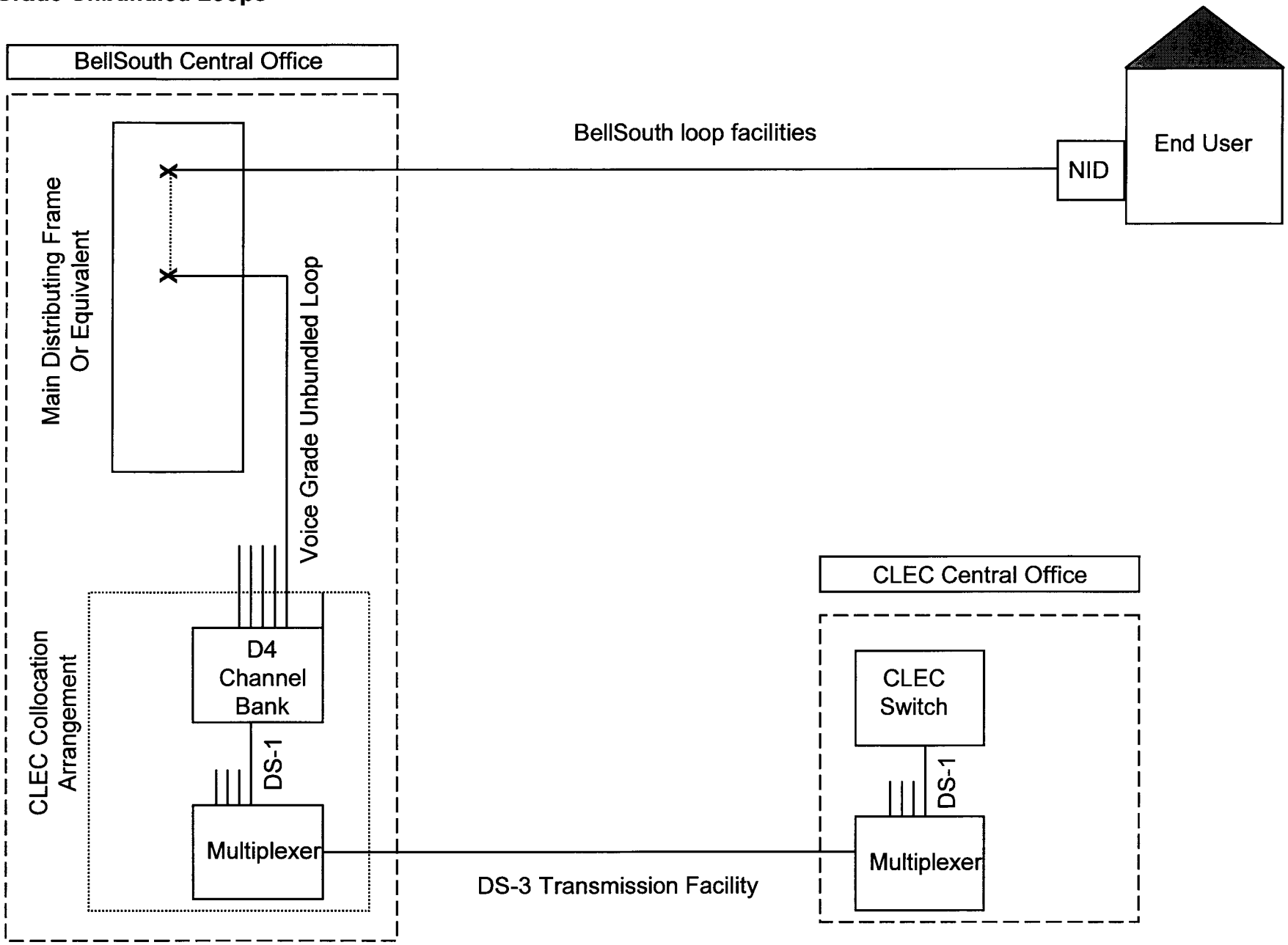
BellSouth Telecommunications, Inc.
Exhibit WKM-3