THEKDWGROUP

Suite 500
1200 19th Street, NW
Washington, DC 20036
tel (202) 955-9659
fax (202) 955-9792
thekdwgroup.com

October 5, 2004

VIA ELECTRONIC SUBMISSION

Marlene H. Dortch, Secretary
Federal Communications Commission
445 12th Street, SW
Washington, DC 20554

Re: **Ex Parte**
WC Docket No. 04-313; CC Docket Nos. 01-338, 96-98, and 98-147

Dear Ms. Dortch:

On October 4, 2004, John Mayo, Professor of Economics, Business and Public Policy of Georgetown University, Michael Pelcovits, Principal at Microeconomics Consulting & Research Associates, Inc. (MiCRA), Seth Sacher, Principal at Bates White, LLC, Brad Mutschelknaus of Kelley Drye & Warren LLP, Russell Blau of Swidler Berlin Shereff Friedman, LLP, and myself (Thomas Cohen of The KDW Group LLC) met with the following FCC personnel:

Scott Bergmann, Legal Advisor to Commissioner Jonathan Adelstein
Matthew Brill, Senior Legal Advisor to Commissioner Kathleen Abernathy
Christopher Libertelli, Senior Legal Advisor to Chairman Michael Powell (and Aaron Goldberger of the Chairman's office)
Wireline Competition Bureau Staff – Marcus Maher, Christina Langlois, Russell Hanser, Tim Stelzig, Jeremy Miller, Carol Simpson, Gail Cohen, Ian Dillner, Tom Navin, and Cathy Zima.

The purpose of these meetings was to present the attached "Mayo/MiCRA/Bates White Economic Impairment Analysis". (A copy of the PowerPoint presentation also is attached.) This analysis was funded by a large group of competitive local exchange providers (CLECs), who are listed in footnote #2 at the beginning of the study. These CLECs support the overall tenor of this analysis, although each may emphasize different issues or may have a different methodology for or approach to analyzing specific issues. In all instances, the Commission should refer to the specific comments and ex parte filings of the individual CLECs.

At these meetings, the economists emphasized that the ideal method of determining impairment for DS3 and dark fiber transport would be to examine the CLECs that were actually wholesaling such facilities. Since these providers have a great incentive to make themselves known to purchasers, a simple self-certification requirement should prove an accurate measurement of their presence in the market. Should the Commission wish to evaluate markets where, in addition to actual presence, additional entry is likely, it could examine a number of surrogates, including the revenue potential in the market or the number of fiber-based collocators on both ends of a route. In any such an examination, the Commission needs to proceed cautiously since the decision of CLECs to actually deploy facilities is based on a complex and varying calculation. The economists further noted that the fact that CLECs had deployed facilities on particular routes in the past does not necessarily indicate that deployment on similar routes will be economically viable in the future, if those past investments proved to be unprofitable and resulted in the bankruptcy of the CLECs that constructed the facilities.

As for DS1 transport, the economists explained that any exception to the nationwide finding of impairment with respect to DS1 transport should only be granted based on clear evidence of two or more **actual** providers of DS1 transport on a wholesale basis along a route.

The economists also discussed their conclusion that the ILEC provided special access services are not a substitute for unbundled network elements (UNE). In sum, the economists found that because special access pricing was generally much higher than UNE pricing, no rational CLEC would purchase special access services unless unique conditions applied. These include instances where the CLECs may be using the facilities for the provision of services that did not "qualify" for UNEs, or where the ILECs fail to make UNEs available in a timely manner and on a nondiscriminatory basis. The economists also found that the CLECs would be harmed severely if they had to purchase special access services instead of UNEs since these facilities constitute a very large percentage of their input costs (which is not the case with wireless service providers). If CLECs tried to pass these costs increases along to customers, they would then be faced with a price squeeze resulting in a dramatic loss of customers.

At the meeting with the staff of the Wireline Competition Bureau, the following individuals also were present: Jonathan Lee of CompTel/ASCENT, Jason Oxman of the Association for Local Telecommunications Services, Chris Frentrup of MiCRA, and Gary Ball of Gary Ball Consulting. Gary Ball presented a study prepared by QSI Consulting, Inc entitled "Analysis of State Specific Loop and Transport Data." This study is being filed by CompTel/ASCENT and others today, and a copy is attached. (The QSI study also was referenced in the meetings with the three Legal Advisors.)

Yours truly,

Thomas Cohen
Principal

cc: Matthew Brill
Scott Bergmann
Christopher Libertelli
Russell Hanser
Jeremy Miller
Tom Navin
Marcus Maher
Christina Langlois
Tim Stelzig
Carol Simpson
Gail Cohen
Ian Dillner
Cathy Zima

REDACTED—For Public Inspection

Before the
FEDERAL COMMUNICATIONS COMMISSION
Washington, D.C. 20554

In the Matter of	)	
Unbundled Network Elements	)	WC Docket No. 04-313
Review of the Section 251 Unbundling Obligations of Incumbent Local Exchange Carriers	)	CC Docket No. 01-338

Mayo/MiCRA/Bates White Economic Impairment Analysis

October 4, 2004

Table of Contents

I. Qualifications 1

II. Introduction and summary 4

III. Background and overview 6

IV. Vitality and vulnerability of the CLECS 8

IV.1. Vitality of the CLECs 9

IV.2. The vulnerability of the CLECs 15

V. The impairment standard 21

V.1. The impairment issue: the context 21

V.2. The impairment issue: the specifics 22

V.3. The impairment standard 27

VI. Market definition 32

VII. The impairment test 36

VII.1. Loops 39

VII.2. Transport 43

VII.2.1. Transport cost structure and economics 46
VII.2.2. Dark Fiber and DS-3 Transport 50
VII.2.3. Impairment exists nationwide for DS-1 transport 53
VII.2.4. Cost of providing DS-1 capacity between two ILEC central offices 53
VII.2.5. Proposed impairment test for DS-1 55

VIII. The Impairment test and special access 56

IX. The impairment test and intermodal alternatives 63

X. Conclusion 66

I. QUALIFICATIONS

(1) My name is John W. Mayo. My business address is Georgetown University, McDonough School of Business, 37th and O Streets, N.W., Washington, DC, 20057. I am Professor of Economics, Business and Public Policy in the McDonough School. I am also the Executive Director of the Center for Business and Public Policy in the McDonough School at Georgetown University. Prior to assuming my current responsibilities, I have held several positions in the McDonough school including Senior Associate Dean (1999-2001) and Dean (2002-2004).

(2) I hold a Ph.D. in economics from Washington University in St. Louis (1982), with a principal field of concentration in industrial organization, which includes the analysis of antitrust and regulation. I also hold both an M.A. (Washington University, 1979) and a B.A. (Hendrix College, Conway, Arkansas, 1977) in Economics. I have taught economics, business, and public policy courses at Washington University, the University of Tennessee, and Virginia Tech. Also, I have served as Chief Economist, Democratic Staff of the U.S. Senate Small Business Committee. Both my research and teaching have centered on the relationship of government and business, with particular emphasis on regulated industries.

(3) I have authored numerous articles and research monographs, and have written a comprehensive text entitled *Government and Business: The Economics of Antitrust and Regulation*, (with David L. Kaserman), The Dryden Press, 1995. I have also written a number of specialized articles on economic issues in the telecommunications industry. These articles, including discussions of competition and pricing in the telecommunications industry, appeared in academic journals such as the *RAND Journal of Economics, the Journal of Law and Economics, the Journal of Industrial Economics, the Journal of Regulatory Economics*, and the *Yale Journal on Regulation*.

(4) My name is Michael Pelcovits. I am a Principal of the consulting firm Microeconomic Consulting & Research Associates, Inc. ("MiCRA"), which specializes in the analysis of antitrust and regulatory economics. My business address is 1155 Connecticut Avenue, Washington, D.C. 20036. I joined MiCRA in October 2002. Prior to this, I was Vice President and Chief Economist at WorldCom. In this position, and in a similar position at

MCI prior to its merger with WorldCom, I was responsible for directing economic analysis of regulatory and antitrust matters, before federal, state, foreign, and international government agencies, legislative bodies, and courts. Prior to my employment at MCI, I was a founding principal of the consulting firm, Cornell, Pelcovits & Brenner. From 1979 to 1981, I was Senior Staff Economist in the Office of Plans and Policy, Federal Communications Commission. I have testified or appeared before the Federal Communications Commission, many state regulatory commissions, the Office of Telecommunications (Oftel) of the UK government, the European Commission, the Ministry of Telecommunications of Japan, and the Civil Aeronautics Board. I have lectured widely at universities and published several articles on telecommunications regulation and international economics. I hold a B.A. from the University of Rochester (*summa cum laude)* and a Ph.D. in Economics from the Massachusetts Institute of Technology, where I was a National Science Foundation fellow.

(5) My name is Chris Frentrup. I am an Economist at the consulting firm Microeconomic Consulting & Research Associates, Inc. ("MiCRA"), which specializes in the analysis of antitrust and regulatory economics. My business address is 1155 Connecticut Avenue, Washington, D.C. 20036. I joined MiCRA in December 2003. Prior to this, I was a Senior Economist at WorldCom. In this position, and in the same position at MCI prior to its merger with WorldCom, I provided economic analysis of regulatory matters before the Commission and state public utility commissions, including price cap regulation, universal service, and local competition. Prior to my employment at MCI, I was an Economist in what was then the Common Carrier Bureau of the Federal Communications Commission, from 1987 through 1994. In that position, I served on the task force that developed and implemented price cap regulation for AT&T and the local exchange carriers. I hold a B.A. from the University of Texas and a Ph.D. in Economics from the Texas A&M University.

(6) My name is Seth Sacher. I am a Principal with the consulting firm of Bates White, LLC. My business address is 2001 K Street, NW, Washington, DC 20006. I joined Bates White in 2003. Prior to that I was a Principal at Charles River Associates. Before joining Charles River Associates, I was a Staff Economist at the Federal Trade Commission. I have also held several other positions as a professional economist within government, universities, and the private sector. I am a specialist in applied industrial organization and antitrust and have extensive experience analyzing economic issues pertaining to competition, such as market

definition and the evaluation of entry conditions. I have worked on these issues in matters involving a broad spectrum of industries, including the telecommunications industry. I received a B.A. in Economics from the State University of New York at Binghamton and an M.A. and Ph.D. from the University of Maryland. I have published several articles in the areas of antitrust and applied microeconomic analysis.

II. INTRODUCTION AND SUMMARY

(7) On August 20, 2004, the Federal Communications Commission (Commission) issued an Order and Notice of Proposed Rulemaking (NPRM) in which it seeks comments on alternative unbundling rules necessitated by the *United States Telecom Association v. FCC* (USTA II) decision.[1] This paper, in response to the Commission's NPRM, offers a fresh perspective on the critical issues of the economics of unbundling and "impairment" with particular emphasis on its application to enterprise loops, transport, and dark fiber. [2]

(8) In this paper, we find the following:

- Eight years of experience under the Telecommunications Act have shown that unbundling and the related concept of impairment are not only the sources of considerable legal debate but, more importantly, have emerged as an economic linchpin issue for the emergence of competition.
- In this regard, the economic activities undertaken by new entrants that rely upon unbundled network elements are creating significant economic benefits for consumers in the United States, including the provision of new, innovative services, lower prices, greater choices, increased output, and downward cost pressures on incumbent providers of local exchange services.
- While creating a significant source of economic vitality to the market, these competitors also show significant vulnerabilities that, absent an appropriate impairment standard and unbundling policy, will put the emergence of competition and the attendant improvements in consumer welfare at risk.

---

1 United States Telecom Association v. Federal Communications Commission, 359 F.3d 554 (2004) ("USTA II").

2 The coalition of sponsors for this study include AT&T; Blackfoot Telecommunications Group; Cavalier Telephone, LLC; Cbeyond Communications; Choice One Communications; CompTel/ASCENT; Conversent Communications; Covad Communications; DSL.net, Inc.; Eschelon Telecom, Inc.; FDN Communications; KMC Telecom; ITCDeltacom; Lightship Telecom; MCI; McLeodUSA; New Edge Networks; NuVox Communications; Oneeighty Communications; Pac-West Telecomm, Inc.; PAETEC Communications; Supra Telecommunications and Information Systems, Inc; TDS Metrocom; US LEC Corp.; U.S. TelePacific Corp.; XO Communications; and Xspedius Communications.

- The need to address the Court's concerns in USTA II does not require abandoning a policy of enabling competition, the "prime directive" embedded in the Telecommunications Act.
- While the court's actions may seem to create considerable uncertainty and create a desire to "go back to the drawing board," our review indicates that rather small, but entirely logical refinements in the concept of "impairment" can simultaneously address the court's criticism of the Triennial Review Order (TRO) impairment standard and advance the pro-competitive goals of the Telecommunications Act.
- After a full consideration of the issues raised by the USTA II case, the appropriate market within which to analyze the issue of impairment for enterprise loops and transport are, as the Commission has previously established, "customer by customer" and "route by route," respectively.
- While new competitors are eager to have the opportunity to compete, in virtually all cases they are currently impaired without unbundled access to DS-1 and DS3 loops/transport and dark fiber.
- The RBOCs have overstated the extent to which self-deployment of DS-1, DS3 and dark fiber loops and transport has occurred. Consequently, the RBOC's position that unbundling these elements is no longer necessary to further enable telecommunications competition is mistaken.
- Other possible means by which new entrants may conceivably secure the ability to provide service (e.g., intermodal provision by cable operators or special access) do not enable competition in the provision of wireline business services and, as such, cannot be said to remove the impairment of prospective entrants.

III. BACKGROUND AND OVERVIEW

(9) Only eight short years ago, the Telecommunications Act of 1996 was ushered in on a wave of optimism that the era of local exchange telephone monopoly was over. Politicians and industry pundits alike heralded the passage of the Act. Commissioner Susan Ness noted, "opportunities abound" for both industry and consumers as a consequence of the passage of the Act.3 Similarly, Commissioner Rachael Chong proclaimed that the new Act would "catapult this country right into the Information Age."[4] Vice President Gore enthusiastically proclaimed that the passage of the Act was tantamount to the fall of the Berlin Wall of the telecommunications industry. And former Senate Majority Leader Howard Baker asserted, "I can now confidently predict that the Telecommunications Act of 1996 …will usher in an era of communications innovation that will shortly make our present arrangement seem as antiquated as the Guttenberg press."[5]

(10) Political hyperboles aside, there were several bona fide reasons for this enthusiasm. Indeed, the fundamental intent of the Act was to open all telecommunications markets to competition. That objective, in turn, seemed designed to spark the interests of entrepreneurs. After all, local exchange markets in the United States are amazingly large—well over $100 billion in annual revenues. In addition, at the time the Act was passed, the economy seemed to be headed into new territory with the emergence of e-commerce, which was founded on the Internet. The Internet, in turn, relies fundamentally on the telecommunications industry's infrastructure. Thus, at the time the Act was passed, conditions seemed ripe for a policy initiative to promote competition and, ultimately, the deregulation of the final stronghold of monopoly power in this industry.

(11) By now, however, the beachhead established by the competitive telecommunications industry has been littered with the bodies of numerous firms that have unsuccessfully attempted to

---

3 Statement of Commissioner Susan Ness, February 23, 1996.

4 "A Camelot Moment—the Telecommunications Act of 1996." Comments of Commissioner Chong before the Federal Communications Bar Association, Midwest Chapter, Chicago, Illinois, February 15, 1996.

5 "We're Finally Catching up with Dick Tracy," by Howard Baker, Jr. Newsday, February 25, 1996.

enter local exchange markets.[6] It is, of course, difficult to untangle whether these failures are the consequence of poor business models, the bursting of the "dot-com bubble," a generally weak economy or monopoly-entrenching behavior of the RBOCs.[7] It is clear, however, that, given the generally nascent stage of competition in local exchange telecommunications markets today, the ultimate success or failure of the competitive seeds that are present to "take root" critically depends at this juncture on the ability of the Commission to "get it right" in enabling competition.[8]

(12) In Section V, we turn specifically to a discussion of the Commission's approach to impairment and how the standards adopted in the TRO can be modified to account for the USTA II decision. Before turning to the technical issue of impairment, however, it is important to see what, exactly, is at stake. Who are these new providers? What do they do? How do their activities play a role in advancing telecommunications competition and telecommunications investment?

(13) To gain insight into these questions, we sought information from the competitive local exchange carriers (CLECs) on their activities in the marketplace. While the Commission has gathered aggregate data on line counts, etc., we sought more nuanced information that, we found, reveals a picture of both vitality and vulnerability. The vitality of CLECs in the marketplace is palpable. At the same time, the vulnerability of these carriers to adverse decisions to enable competition fully is also abundantly apparent.

---

6 See Table 1, *infra*.

7 For a more detailed discussion of this issue, see Mark Burton, David L. Kaserman, and John W. Mayo "Shakeout or Shakedown? The Rise and Fall of the CLEC Industry" in *Markets, Pricing, and Deregulation of Utilities*, Michael A. Crew and Joseph C. Schuh, Eds., Boston, Kluwer Academic Publishers, 2003.

8 Indeed, as discussed infra (Section V), the Supreme Court has provided a compelling "meta-message" regarding the competition-enabling goal of the Act.

IV. VITALITY AND VULNERABILITY OF THE CLECS

(14) While aggregate data portraying the nationwide or state-by-state footprint of new entrants into the telecommunications arena is useful, they fail in many ways to portray accurately the full vitality that new entrants are bringing to telecommunications markets. To gain a more complete ("granular") perspective, we conducted a series of interviews with a number of CLECs that rely upon the provision of unbundled network elements to provide retail telecommunications service.

(15) Interviews with twelve of the CLECs that are sponsors of this study were conducted during the period from September 20 through September 28, 2004.[9] The size and scope of the carriers vary widely. Their 2003 revenues ranged from $10 million to $869 million, with an average of $226 million. One entered in 1994, two in 1995, one in 1996 and 1997, five in 1998 and two in 1999. All offer web hosting and high-speed Internet services, 11 offer local and long distance voice services, nine offer dial-up Internet services, and eight offer pure data services.

(16) The results of these interviews are quite telling. Specifically, we found these new competitors are introducing innovative new services into the marketplace, are driving the market to reduce prices, and are increasing customer choices for services that formerly were the domain of a single monopoly provider. Moreover, the presence of these firms is forcing the incumbent Bell companies to innovate and increase investments that enable improved and superior customer performance. Importantly, all these benefits are being driven by firms that critically rely upon a regulatory framework that fully enables the emergence of competition, including access to network elements.

(17) While the CLECs have brought numerous benefits to the enterprise local exchange market, they are also highly vulnerable. While such vulnerability of specific new entrants—

[9] The parties we held discussions with are: **BEGIN PROPRIETARY END PROPRIETARY.**

individually—is to be expected, our assessment is that the entire competitive fringe is, at this point vulnerable. This vulnerability places at risk virtually all of the competitive benefits just identified in the event that the Commission does not fully embrace a competition-enabling policy.[10] In this section, we discuss both the vitality and vulnerability of the CLECs.

IV.1. Vitality of the CLECs

(18) The "value added" to society of the CLEC competitive fringe manifests itself in a number of ways. For instance, we found CLECs have often been the first firms in a given geographic region to offer new services that the marketplace finds attractive. For example, one company indicated that it was the first telecom provider to offer local service, including fully featured class 5 local voice and 911 services as well as long-distance voice services, and high speed Internet connectivity, over an Internet Protocol network.[11] The introduction of Internet Protocol network architecture and softswitching in the local exchange market has permitted local service providers to offer to small businesses affordable state of the art services that were previously only available to big businesses. This is due to the capabilities introduced by use of Internet Protocol vs existing circuit switched technology.

(19) Several CLECs similarly indicated they were the first in their service areas to offer broadband services to their customers.[12] Some indicated the incumbent local exchange carriers (ILECs) had essentially abandoned markets below the top tiers until their entry.[13] The broader evidence suggests that CLECs in general have engaged in a huge push to deploy broadband products, particularly in lower tier markets, and this has forced the ILECs to respond in kind. As noted by many interviewees, by bringing such services to lower tier markets, the presence of the CLECs not only has directly benefited the customers receiving

---

10 We emphasize here an important distinction; namely that the Commission adopt policies to protect competition rather than one that protects any given competitor or competitors. Students of industrial organization routinely praise the former and condemn the latter.

11 Discussion with **BEGIN PROPRIETARY END PROPRIETARY**

12 Discussions with **BEGIN PROPRIETARY END PROPRIETARY**

13 Discussions **BEGIN PROPRIETARY END PROPRIETARY**

these services, but generally has made such areas more competitive in retaining and attracting businesses and employment.

(20) Several CLECs indicated that they were the first to offer integrated voice and data services over the same T1 lines.[14] Thus, within a T1 line, these products will dedicate a certain number of channels to voice and a certain number of channels to data. Prior to their entry into their respective market areas, incumbent producers, usually only the ILEC, would not split their T1s in this manner. These new CLEC products allowed customers to purchase fewer lines. Most of the CLECs indicated that after they introduced such products, the ILECs would usually follow suit.

(21) One CLEC indicated that it was the first in its marketing areas to offer what can best be depicted as the "next generation" of the integrated products described above.[15] Specifically, in a typical integrated loop, a certain number of channels are reserved for voice and a certain number are dedicated to data. This CLEC indicated it is offering a "dynamic bandwidth allocation" product. Thus, whereas the integrated products described above dedicate a certain number of channels to voice and a certain number of channels to data, this product allows data services to "borrow" any unused voice bandwidth when phone lines are idle (with voice services always given priority over data). This product has a number of advantages for customers. For example, for companies that sporadically use large data applications, it can reduce the number of lines they must purchase.

(22) Another CLEC indicated it offers customers unique remote data backup and recovery services.[16] This service automatically backs up customer information through their Internet or VPN connections. Information is backed up at a storage infrastructure located in the CLEC's collocation facility. The entire process is automated and obviates the need for staff to handle tapes or run backup jobs. Further, customers do not need to incur hardware or software costs to support their storage needs.

---

14 Discussion with **BEGIN PROPRIETARY END PROPRIETARY**

15 Discussions with **BEGIN PROPRIETARY END PROPRIETARY**

16 Discussions with **BEGIN PROPRIETARY END PROPRIETARY**

(23) While some of the innovations the CLECs have brought to the market involve technologically sophisticated products, some of them simply involve new ways of selling existing products or improving customer service. For example, one CLEC indicated that it offers a unique product that allows customers to make changes, additions, and deletions to their accounts online.[17] Such offerings provide a degree of customer control designed to enhance consumer welfare. For example, this product allows users to log on to their account and customize the name that will show up on called parties' Caller ID display.

(24) Several CLECs indicated they were the first to offer bundled products or flat-rate calling plans.[18] Another indicated that because of its more efficient internal operation it is able to bring customers "on net" more quickly than the incumbent ILEC, even though it depends on ILEC elements to service customers.[19]

(25) Finally, several CLECs indicated their presence benefits consumers simply because many of their clients feel their service is more personalized than that offered by the Bells.[20] While such claims are difficult to quantify, and all businesses certainly champion the superiority of their customer service, there are several compelling reasons to give credibility to the CLECs' customer service assertions. Among these, the behemoth size and scope of the ILECs tend to create generalized "solutions" for their customers while CLECs are able to zero in on "niche" markets and needs, thereby fine tuning customer service. The addition, then, of CLECs to this arena has moved the market beyond a "one size fits all" customer service environment.

(26) Publicly available data serve to corroborate our findings from interviewing CLECs. For example, in June of 2002, DSL.Net launched a new service, NETLink Virtual Private Network (VPN), that is still being offered today. NETLink is aimed at small to medium sized businesses, and offered secure inter-office communications without the high costs typically associated with comparable products available at that time. NETLink utilizes T-1 and SDSL

---

17 Discussion with **BEGIN PROPRIETARY END PROPRIETARY**

18 Discussions with **BEGIN PROPRIETARY END PROPRIETARY**

19 Discussions with **BEGIN PROPRIETARY END PROPRIETARY**

20 E.g., discussions with **BEGIN PROPRIETARY END PROPRIETARY**

access lines to support multi-location customers, and can be customized to specific customers, without the need for additional Customer Premise Equipment (CPE).[21]

(27) Not only have CLECs introduced new telecommunications services, they have also driven price reductions that have demonstrably helped consumers.[22] Indeed, numerous industry observers have indicated that the presence of CLECs in the marketplace has led to lower prices. For example, a recent study by the Small Business Administration (SBA),[23] found that for businesses responding to the survey,[24] monthly expenditures for DS-1 services were on average $559.61.[25] Expenditures for DS-1 service when that service was provided by an ILEC were higher ($798.80)[26] than when the service was provided by a CLEC ($388.75).27 More generally, the SBA found that, "The main concerns of small business end users, namely price, customer service, and flexibility, are readily addressed by CLEC offerings. In addition, the presence of alternative carriers has placed competitive pressure on ILECs to lower prices and offer increased services." An analysis released by the CompTel/ASCENT Alliance and the PACE Coalition found that America's small businesses saved more than $4 billion in 2003, and could save more than $6 billion in 2004 due to increased competition from CLECs for local and long distance voice services.[28]

---

21 "DSL.net Launches New NETLink VPN Service," Press Release, June 20, 2002, http://www.dsl.net/news/pr2002/pr062002.pdf (visited September 16, 2002).

22 While we focus here on specific telecommunications marketplace evidence, more general documentation of the pro-competitive, aggressive pricing behavior of new entrants is well known. Se, e.g., Dakshina G. DeSilva, Timothy Dunne and Georgia Kosmopoulou "An Empirical Analysis of Entrant and Incumbent Bidding in Road Construction Auctions," *Journal of Industrial Economics*, Vol. 41, September 2003, pp. 295-316.

23 Stephen B. Pociask, "A Survey of Small Businesses' Telecommunication Use and Spending," SBA Office of Advocacy, March 2004.

24 There results were based on a mail survey conducted by TeleNomic Research to which 458 small business owners responded, providing information on employment size, industry, use and expenditures for various telecommunications services and other aspects of small business perceptions.

25 Id., Figure 31.

26 Id., Figure 42.

27 Id., Figure 41.

28 "Competition Could Reduce Small Business Phone Bills by $6 Billion," CompTel/Accent Press Release, January 28, 2004.

(28) A number of CLECs indicated that while they themselves may not be offering the lowest prices found in the marketplace, their presence has led to lower prices that benefit consumers. They indicated these are real price reductions that are not driven simply by technology induced cost reductions. For example, one company believed the local ILEC-reduced prices on digital switched services and ISDN PRI services, including free months of service, were a result of its presence and that of another CLEC.[29] Another party observed the Bell companies attempting to offer the same type of bundled services that it does, as well as reducing the prices of its services in response to CLEC entry into a particular area.[30] This CLEC noted that sometimes such Bell responses do not take place until it secures significant (former ILEC) customers, but that in markets in which it has entered recently, the ILEC response was immediate. Several noted aggressive "winback" programs by the Bells that were in direct response to the CLECs' presence. For example, when one CLEC entered the downstream, small and mid-sized business (SMB) market, it generally priced 25 to 30 percent below ILEC prices. BellSouth responded with winback programs discounting its tariffed rates up to 25 percent.[31]

(29) Another CLEC indicated that rates currently available from the Bells to business customers have dramatically fallen for all local exchange services in response to the emergence of some competition. For example, this CLEC reports that rates for ISDN PRI services are one-third of what they were when the CLEC first entered the market, a consideration that was at least partly due to the presence of CLECs.[32]

(30) Yet another CLEC provided a number of examples of price reductions by Qwest in its marketing area that were largely a direct response to its presence and that of other CLECs.[33] **BEGIN PROPRIETARY END PROPRIETARY**

---

29 Interview with **BEGIN PROPRIETARY END PROPRIETARY**

30 Discussions with **BEGIN PROPRIETARY END PROPRIETARY**

31 Discussions with **BEGING PROPRIETARY END PROPRIETARY**

32 Discussions with **BEGIN PROPRIETARY END PROPRIETARY**

33 Discussion with **BEGIN PROPRIETARY END PROPRIETARY**

(31) Another benefit of the CLEC industry is that of redundancy. Thus, in addition to providing greater choice and spurring price and investment competition, CLECs provide redundancy in case of disasters. For example, ITC^DeltaCom noted that its data center maintained service throughout the recent hurricanes in Florida.[34] and NEON Communications helped provide emergency services to lower Manhattan in the aftermath of 9/11.[35]

(32) In addition to the welfare-enhancing effects of the CLECs brought about by the introduction of new services, lower prices and increased consumer choice, there is growing evidence that a vibrant CLEC presence will enhance rather than diminish investment in modern telecommunications infrastructure capable of supporting advanced services. This evidence comes from economic theory and from empirical econometric studies.[36]

(33) Finally, it is worth noting that even the business press has increasingly recognized the importance of a vibrant competitive sector in telecommunications markets. For example, a recent commentary in *Business Week* noted that startups in other countries that have been afforded access to incumbent firm networks have "waged fierce battles against giant rivals, driving prices down and speeds up. 'Competition is the No. 1 (reason) why one country grows faster than another,' says Sam Paltridge, the OECD's telecom analyst…On this score, the U.S. has blown it… The country must create vigorous competition to drive the low prices and high speeds that can usher in a prosperous broadband economy."[37]

---

34 "E^delatcom Delivers 100% Up Time Through Tropical Storms Gaston and Fracnes," Press Release, September 10, 2004, http://www.itcdeltacom.com/press/edcWeather%20040910%20-%20FINAL.pdf. (visited September 29, 2004).

35 Vincent Ryan, "Early hopes quickly dashed," *Telephony*, September 24, 2001.

36 For a summary of the theoretical and econometric evidence, see e.g., Direct Testimony of John W. Mayo, submitted for AT&T, in PA PUC, Docket No. I-0030099, at pp. 39-51; See also See also Clarke, Hassett, Ivanova and Kotlikoff, "Assessing the Economic Gains from Telecom Competition," NBER Working Paper Series, May 2004; Phoenix Center, Policy Bulletin No. 4: The Truth about Telecommunications Investment, June 24, 2003; ALTS, The State of Local Competition, (2003), p. 10 and Comptel, Measuring the Economic Impact of the Telecommunications Act of 1996: Telecommunications Capital Expenditures (1996-2001) (October 2002).

37 "Commentary: Behind In Broadband," *Business Week*, August 27, 2004.

IV.2. The vulnerability of the CLECs

(34) In any discussion of the vitality of the CLECs, it is critical that the Commission recognize that this vitality is by no means ensured on a forward-going basis. Indeed, the success of these firms under a policy that has assured unbundled network elements (UNE) availability cannot—as a matter of logic and empirical fact—be taken to be guaranteed, or even likely—in the absence of UNE availability.[38] To do so would be akin to suggesting that a patient taking a ten-day treatment regimen stop taking medication after five days simply because he appears healthy. Indeed, any dispassionate assessment of the CLEC industry makes the vulnerability of this entire competitive fringe abundantly clear. Evidence of the significant difficulties facing the CLEC competitive fringe include a variety of factors such as the high number of bankruptcies and exits that have befallen the CLEC fringe firms, the difficulties these entities face in raising capital, and the current financial position of the CLECs, as revealed through the interview process and publicly available information.

(35) As shown in Table 1, there have been scores of CLEC bankruptcies in recent years.

---

[38] Indeed, the Commission need only reflect on the marketplace reaction to the recent decisions not to pursue policies designed to provide mass-market switching on an unbundled basis. Specifically, in the wake of those decisions, several market participants announced withdrawals or significant supply reductions from residential local exchange markets (e.g., see "AT&T to Stop Competing in the Residential Local and Long-Distance Market in Several States," Press Release, June 23, 2004). These supply reductions will lead to reduced consumer choices, higher prices, less competitive pressure on the incumbent local exchange providers, and reductions in consumer welfare.

Table 1: CLEC bankruptcies through August 2004[39]

@Link	Fairpoint	NorthPoint Communications
2nd Century	Focal	NX Communications
Actel	FutureOne	Omniplex
Adelphi Business Solutions	General Datacom	Onvoy
Advanced Radio Telecom	Global Crossing	OpTel
American MetroComm	GST	Pathnet
Allegiance	HarvardNet	Picus Communications
Ardent Communications	ICG Communications	Prism Communications
BroadRiver Communications	McLeodUSA	Rhythms NetConnections
Columbia Telecommunications	MetStream	Startec Global Communications
ConnectSouth	Mpower Communications	Teligent
Convergent Communications	Net2000 Communications	UBNetworks
Covad Communications	NETtel	Vectris
CTC	Network Asset Solution	Vitts
Digital Broadband Communications	Network Plus	Williams Communications Group
e.spire Communications	Ntelos	Winstar
ITCDeltaCom	WorldCom	
Jato	XO Communications	
Maverix.net	Yipes	

(36) According to the Association for Local Telecommunications Services (ALTS), of 18 publicly traded CLECs, 15 reported an annual net loss in 2002,[40] and at least 12 reported net losses in

[39] Burton, Kaserman, and Mayo, "Shakeout or Shakedown?," in *Markets, Pricing, and Deregulation of Utilities*, edited by Michael Crew and Joseph Schuh, 2002; ALTS "Progress Report on the CLEC Industry," October 17, 2002, Appendix A; ALTS "The State of Local Competition 2003," April 2003; Smith, Judy, "Atlantic-Acm's Take on Qwest/Allegiance/Level 3 Scenario," Press Release April 2, 2004. http://www.atlantic-acm.com/datalines/d020404.htm (visited on September 20, 2004); McKibben, Paul, "NX Files for Bankruptcy: Move results in layoffs; building costs at source of company's troubles," *Chronicle-Tribune*, April 3, 2004. http://www.chronicle-tribune.com/news/stories/20040403/localnews/201372.html (visited on September 20, 2004); "WorldCom Files for Bankruptcy Court Protection," Press Release, July 21, 2002. http://global.mci.com/news/news2.xml?newsid=3690&mode=long&lang=en&width=530&root=/&langlinks=off (visited on September 28, 2004).

2003.[41] In its 2000 report, ALTS reported there were more than 300 facilities-based CLECs. In 2004, it reported there were 59 independent facilities-based CLECs.[42]

(37) In addition to the high rate of bankruptcies and exits, a number of other indicia indicate the CLEC industry is vulnerable. For example, financial market evaluations, which represent a summary of expectations regarding future profitability, have indicated dismal expectations regarding the CLECs' prospects, with market capitalizations over 95 percent below their height in late 1999. While poor stock performance affected the entire telecommunications industry, the drop for the CLECs has been particularly steep. Thus, as seen in the following graph where the capitalization of the entire CLEC industry reached 24.7 percent of the capitalization of BellSouth, Verizon, and SBC in late 1999, it was barely two percent of the capitalization of those three firms at the end of 2003. Indeed, the worth of the industry relative to the RBOCs is even lower than when the Telecommunications Act was first passed.

---

40 See ALTS *Progress Report on the CLEC Industry*, October 17, 2002.

41 These companies include the following: Allegiance Telecom; ChoiceOne; DSL.Net; FiberNet Telecom Group; ICG Communications; ITC DeltaCom; Mpower; McLeod USA; PacWest; US Lec; XO Communications; and Z-Tel. Financial information was retrieved from respective company 2003 10K reports.

42 ALTS, *The State of Local Competition 2004*, July 2004, pp. 19, 20. Facilities-based CLECs are defined as those companies owning and investing in switches, fiber optic cables, wireless antennas, and other new, state-of-the-art infrastructures.

Figure 1: CLEC market capitalization as a percent of capitalization of BellSouth, Verizon, and SBC

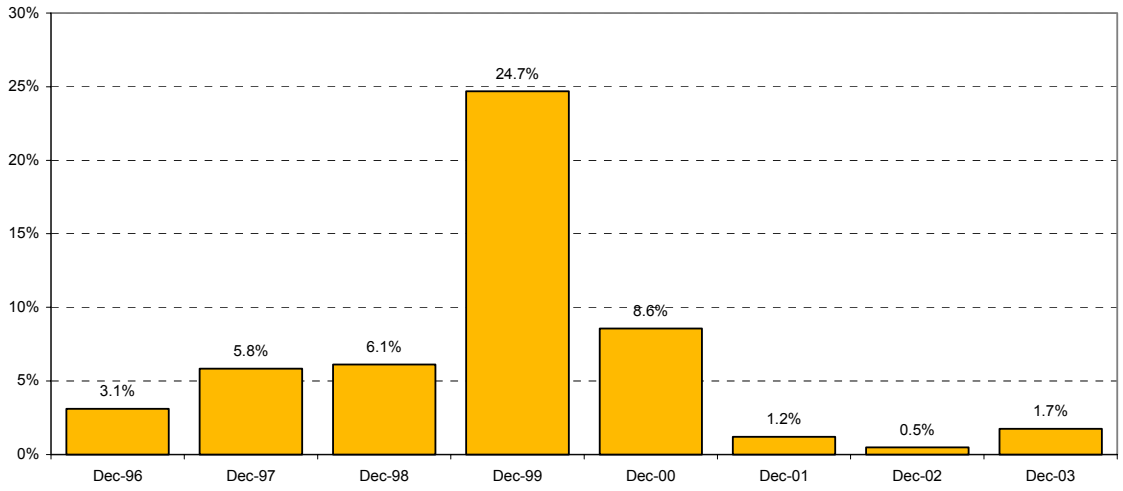

Source: ALTS and Bernstein Investment Research and Management.

(38) To the extent there are parties to this matter that have gone bankrupt, most have reorganized. Nevertheless, few of the CLECs we spoke with could be categorized as being financially strong. Most were EBITDA positive, although they had only become positive recently and many are still cash-flow negative. Thus, despite recent improvements, the positions of most CLECs still appears highly vulnerable to regulatory changes that will increase the cost or difficulty of obtaining access to competition-enabling platforms. A number of these firms have explicitly indicated that if they could not obtain UNEs for transport and loops, this would have a significant adverse impact on their business model.[43] It is also important to note that, in the case of bankruptcies, the book value of assets may fall due to the conditions of the reorganization. Thus, the increased solvency of many of the CLECs may not reflect fundamental improvements in future prospects. Yet another indication of the vulnerability of the CLEC fringe is the current regulatory uncertainty that

43 Discussion with **BEGIN PROPRIETARY END PROPRIETARY**

it faces regarding network access and the negative consequences this uncertainty creates for raising necessary capital in financial markets.[44]

(39) Further, in the interview process, many CLECs indicated they had difficulties obtaining financing through the capital markets. This was due to both their own precarious financial conditions and current uncertainties regarding the viability of the CLEC industry as a whole, including the nature of the regulatory environment.[45] Security filings also indicate that for a number of CLECs, debt loads are high and this limits their ability to obtaining financing. In its 2003 10K report, McLeodUSA, Inc. reported net losses every year since operations began in 1992. The company acknowledged that, "if we do not become profitable in the future, we could have difficulty obtaining funds to continue our operations."[46] In its 2003 10K report, Choice One Communications notes, "We may not have the ability to develop strategic alliances, make investments, or acquire assets necessary to complement our existing business."[47] Several other CLECs have also indicated serious questions exist regarding their ability to raise capital in their SEC filings.[48] Moreover, a number of venture capitalists have submitted affidavits in various proceedings indicating that the loss of UNEs would make it unlikely CLECs could attract any capital.[49]

(40) Yet another indication of the vulnerability of the CLECs is the publicly available information on these companies' credit ratings. These ratings represent the credit rating agency's assessment of the debt-holder's risk of receiving principal and interest from the firm issuing the debt. The lower the rating, the higher the probability of default on interest payments and principal repayment, and the higher the probability of bankruptcy. Out of nine firms identified as CLECs whose debt was rated, eight had debt that rated below "investment grade" (i.e., junk).

---

44 Discussion with **BEGIN PROPRIETARY END PROPRIETARY**

45 Interview with **BEGIN PROPRIETARY END PROPRIETARY**

46 McLeodUSA, Inc. 2003 10K Report, page 21.

47 Choice One 2003 10K Report, page 19.

48 FiberNet Telecom 2003 10K Report; DSL Net Inc 2003 10K Report.

49 E.g., see the declarations of John Hunt, James N. Perry, Jr., and Peter H.O. Claudy in Support of the Reply Comments of the Competitive Telecommunications Association.

Table 2: CLEC Standard & Poor's Credit Ratings

CLEC	Rating	Date	Investment grade	Comments
AT&T Corp.	BB+/Negative/B	08/03/04	Below	Provide uncertain protection against losses from credit defaults
Central Telecommunications	ruBB+/--/--	04/05/03	Below	Provide uncertain protection against losses from credit defaults
D&E Communications	BB-/Negative/--	02/03/04	Below	Provide uncertain protection against losses from credit defaults
Eschelon	CCC+/Developing	02/26/04	Below	Extremely vulnerable to losses from credit defaults
Grande Communications	CCC+/Developing/--	02/24/04	Below	Extremely vulnerable to losses from credit defaults
ITC Holding Company	BBB/Negative	07/02/03	Above	Provide adequate protection against losses from credit defaults
MCI Communications Corp.	NR/--/NR	12/31/02	Below	MCI emerged from bankruptcy in April 2004, and is currently not rated by S&P, which mean it is below investment grade
United GlobalCom, Inc	B/Stable/--	03/03/04	Below	Exhibit vulnerability to losses from credit defaults
US Lec	B-/Negative	09/15/04	Below	Exhibit vulnerability to losses from credit defaults

Source: Standard & Poor's website[50]

(41) In addition to suggesting a high probability of bankruptcy, low debt ratings increase the yield on debt, which means the cost of debt capital for the firm is higher. Low rated debt also suggests that the firm is likely to face difficulties in raising new capital (i.e., public debt, bank debt, or equity).

[50] The CLECs shown above include companies identified as CLECs by Standard & Poor's, and those listed in ALTS, *The State of Local Competition 2004*, July 2004, pp. 19-21. Only companies with a publicly listed S&P rating after January 1, 2003 were included. Citizen's Communications was dropped because this company is primarily an ILEC. We also dropped Otter Tail, Inc., because this company is primarily a utility company.

V. THE IMPAIRMENT STANDARD

V.1. The impairment issue: the context

(42) The technical and legal dimensions of the issue of "impairment" have certainly proven to be contentious to this point, and now the USTA II decision has once again dictated an additional detailed refinement.[51] In doing so, it is critical that the Commission not lose sight of the overarching fact that the Telecommunications Act imposes a fundamental change in the responsibilities of the Commission. In particular, the history of regulation has traditionally been one of *protection*: protection of the monopoly from competitors, and protection of consumers from the monopolist. The fundamental change embodied in the Telecommunications Act of 1996 is that, rather than maintaining a policy of protecting consumers by preventing incumbent monopolists from exercising their monopoly power, the Act embraces a policy of *enabling competition*. The Act's approach requires a more affirmative set of actions than any regulatory paradigm employed in the past. Not merely is competition to be permitted, or tolerated, or even accommodated—instead, the Commission is now directed to seek ways to enable competition affirmatively.

(43) In fact, in its 2002 *Verizon* decision, the Supreme Court was quite clear regarding the Congressional intent behind the Act.[52] The Court noted that Congress sought "*an entirely new objective of uprooting monopolies*" and that the policy charge was "*to reorganize markets by rendering regulated utilities' monopolies vulnerable to interlopers*."[53] Thus, in light of the Supreme Court's judgment, there can be no doubt that the Commission's prime directive is to cast off the anachronistic tendency to protect the incumbent utilities from competition and, instead, to undertake policies that enable competition (i.e., the competitive process itself) to become effective.[54] Indeed, the Court went so far as to note that "the Act appears to be an explicit

---

51 For a review, see TRO, ¶¶15-30 and USTA II at pp. 13-15.

52 Verizon Communications, Inc. v. FCC, 535 U.S. 467 (2002) ("Verizon").

53 Verizon, 535 U.S. at pp. 488-489. (Emphasis added.)

54 The laudable goal of promoting competition through competition-enabling policies is distinct from misguided policies that protect individual competitors. Economists widely endorse the former, buttressed by the passage of the Telecommunications Act, while economists and antitrust scholars routinely denounce the latter.

disavowal of the familiar public-utility model…in favor of novel rate setting designed to give aspiring competitors every possible incentive to enter local retail telephone markets, short of confiscating the incumbents' property."[55] The lesson from the Supreme Court is that as the Commission seeks to craft economically sound and legal standards and tests, it must do so in a fashion that is truly competition enabling.[56]

(44) It is also important to note that much of the competition that exists today has developed in an environment in which access to unbundled network elements has been available. It would be a logical mistake to point to the development of this competition predicated on the availability of UNEs as evidence that UNEs are no longer necessary. Likewise, it is also true that the development of pockets of competition is not evidence that additional steps might not need to be taken to further enable competition in other areas or market niches.

V.2. The impairment issue: the specifics

(45) The issue of impairment emanates from section 252(d)(2) of the Act that states that "[in] determining what network elements should be made available …the Commission shall consider at a minimum, whether—(A) access to such network elements as are proprietary in nature is necessary; and (B) the failure to provide access to such network elements would impair the ability of the telecommunications carrier seeking access to provide the services that it seeks to offer." In its interpretation of this statutory language, the Commission has stated that, "A requesting carrier is impaired when lack of access to an incumbent LEC network element poses a barrier or barriers to entry, including operational and economic barriers, that are likely to make entry into a market uneconomic." (*TRO*, ¶ 7)

---

55 Verizon, 535 U.S. at p. 489.

56 For a more detailed discussion of this "meta-message" from the Supreme Court Opinion, see David L. Kaserman and John W. Mayo, "The Supreme Court Weighs in on Local Exchange Competition: The Meta-Message," *Review of Network Economics,* September 2002, pp. 119-131. Also found at http://www.rnejournal.com/articles/kaserman_sept02.pdf.

(46) The Commission's analysis in the TRO delineated several factors that need to be assessed in determining whether CLECs would be impaired in the provision of telecommunications services without access to UNEs.[57] Those factors include:

- **Scale Economies.** Economies of scale exist in markets in which long run average cost decreases as output expands. If entrants acquire fewer customers and sell less output than the incumbent, the resulting higher average cost makes it difficult for the entrants to compete with the incumbent, particularly if retail prices are close to the incumbent's average cost. Scale economies, particularly when combined with sunk costs and first-mover advantages, discussed below, can pose a powerful barrier to entry. The Commission noted, however, that scale economies that pertain just to the beginning stages of entry might not be relevant in an unbundling analysis, so long as the entrant would be able eventually to achieve a minimum viable scale that would allow it to overcome these initial diseconomies. For loops and transport, there are significant scale economies persisting over a significant range of output and relating to the cost of constructing fiber optic plants, as well as in the electronics used to light fiber and convert electronic to photonic signals and to cross-connect circuits.
- **Sunk Costs.** Sunk costs are those costs that are unrecoverable upon exit from the market. High sunk costs increase the cost of failure to an entrant. Thus, if there is a substantial risk that entry will not be successful for various reasons, including uncertainty concerning demand for the firm's product and the firm's operational ability to enter the market and achieve profitability, then the presence of large sunk costs could raise the cost of failure and exit sufficiently to deter entry. This increased risk could also be reflected in a higher cost of capital to entrants, thus further discouraging entry into industries that are inherently risky.[58] Potential new entrants may also fear that an incumbent LEC that has incurred substantial sunk costs will drop prices to protect its investment in the face of new entry. There are significant sunk costs associated with construction of fiber loops or transport facilities to

---

[57] See TRO at ¶¶85-91.

[58] Indeed, as seen in Section IV.2 supra, the prolific number of bankruptcies that have occurred among CLECs that have made sunk cost expenditures has clearly compounded the extant barriers to entry caused by sunk costs in this arena.

specific locations, including costs of intra-building ducting and cabling. Sunk costs are also substantial for collocation facilities—including those associated with the set-up charges imposed by the ILECs and the costs to the CLECs of equipping the collocation facility. Non-recurring fees imposed by the ILECs for a number of services, including cross-connections at the collocation space, also constitute significant sunk costs for the CLECs.

- **First-Mover Advantages.** When a firm is able to gain an advantage in the marketplace as a result of entering the market first, it is said to have a first-mover advantage. There are a number of sources of first-mover advantages, such as advertising and gaining brand name preference, patents, sunk costs, and rights-of-way. First-mover advantages often create an absolute cost disadvantage for new entrants, which if large enough, can be a barrier to entry. First-mover advantages can also contribute to the effects of economies of scale and high sunk costs. The first-mover advantages to the ILECs in the markets for loop and transport include: ease of access to rights of way, ease of access to buildings and intra-building cabling, and reputation secured during a period of monopoly incumbency.
- **Absolute Cost Advantages.** An incumbent has an absolute cost advantage if, for any given level of output, the incumbents' per unit costs are lower than for an entrant.[59] Possible sources of absolute cost advantages include privileged access to resources, control of a better technology or more efficient means of production which cannot be duplicated by the entrant, limitations in the availability of productive factors, the learning curve, and a lower cost of capital. Absolute cost advantages, if of sufficient size, can deter entry or make it impossible for entrants to provide service in an economic fashion. One example of an absolute cost advantage is the free (or low priced) access that the ILEC enjoys to its rights of way.
- **Barriers Within the Control of the Incumbent LEC.** Strategic behavior by an incumbent can prevent entry from occurring. For example, under certain circumstances, an incumbent could deter entry if it invested in additional capacity today, such that it would be likely to lower prices when entry occurs, creating losses for everyone. Such behavior is rational only if the incumbent expects that an entrant is likely to be deterred from entry as a result. Another

[59] This differs from the scale economies discussed above, in that each carrier is producing at the same level of output, while scale economies exist because one carrier produces a higher volume.

strategic behavior is product differentiation, which refers to a firm's attempt to distinguish its products from other firms' products and gain the ability to raise the price through advertising, the development of a brand name and product image, varying the product characteristics and quality, and selling in different locations. When faced with prospective entry, an incumbent monopolist can also deter entry by inducing its customers to sign long-term or high-volume contracts, with substantial penalties for breaching the contract. These contracts can act as a barrier to entry, if they prevent customers from switching to an entrant. A primary source of the barriers within the control of the ILEC is where the CLEC must obtain loops from the ILEC and cross-connect those loops to its own transport facilities. The CLECs are dependent upon the ILEC for timely and efficient provisioning of the loop facilities.[60]

(47) The critical concept of course, in this debate, is how the Commission shall define the concept of "impairment." If impairment is defined "too leniently," then the CLECs will have access to ILEC facilities where they could more economically build their own facilities; too harshly, and the CLECs will be unable to compete where they should be able to do so. In this regard, the Commission has found it necessary to refine its impairment standard several times in response to various criticisms offered by the courts. Even with these refinements that were most recently embodied in the TRO, the Commission's impairment standard has still be subjected to criticism from the court for being too "open-ended." For example, the court stated that the Commission's definition of impairment is "vague almost to the point of being empty" because it does not specify the required level of efficiency of the CLEC who is impaired. Specifically, the Commission's phrase "…operational and economic barriers, *that are likely to make entry into a market uneconomic"* raises the question in the court's mind "uneconomic by whom?" That is, does the uneconomic entry standard apply to an efficient CLEC, or to any CLEC no matter how inefficient).[61]

---

[60] The incentive and ability of a vertically integrated provider to "sabotage" its rivals through such non-price mechanisms is well known. See, e.g., T. Randolph Beard, David L. Kaserman and John W. Mayo "Regulation, Vertical Integration and Sabotage," *Journal of Industrial Economics*, Volume 49, September 2001, pp. 319-334.

[61] USTA II at p. 24.

(48) Additionally, in the context of a discussion of wireless carriers' access to unbundled dedicated transport, the USTA II court raised what might be seen as a paradox. Specifically, the court recognized that given "the ILEC's incentive to set the tariff price as high as possible," the ILECs might seek to use the offering of special access as justification for circumventing the unbundling (and pricing) requirements of the Act. But the court also observed that, at least in the case of wireless carriers, the use of dedicated transport circuits at special access (rather than UNE) rates did not appear to be harming competition.[62] Consequently, the court found that a "blanket rule" that treats special access as irrelevant to be too stringent. In particular, the court observed that if, as in the case of wireless carriers' access to dedicated special transport circuits, competition using special access is "flourishing," it is "hard to see any need for the Commission to impose the costs of mandatory unbundling."[63]

(49) While the court's actions may seem to create considerable uncertainty and create a propensity to "go back to the drawing board," our review indicates that rather small, but entirely logical refinements in the concept of "impairment" can simultaneously address the court's criticism of the earlier impairment standard and advance the cause of advancing the pro-competitive goals of the Telecommunications Act.

(50) Specifically, we propose a refinement to the impairment standard that eliminates the "open-ended" criticism of the USTA II court and much more clearly focuses the standard on an investigation of the "structural impediments to competition" that the court highlights in its opinion.[64] Additionally, the refined impairment standard removes the "special access paradox" that the USTA II court identified**.** It does so by drawing upon the extant body of language, methods, and tools from the competition policy (antitrust) arena. In particular, we proffer a specific refinement to the impairment standard that retains the key features of the impairment standard that the court found to be "an improvement" but also refine the

---

62 The court's focus on the *harm to competition* emanates from the observation that the purpose of the Act is "to stimulate competition." As seen infra, our proposed refinement to the impairment standard adheres closely to this interpretation of the Act.

63 USTA II at p. 16.

64 USTA II at p. 24.

concept further by adoption of language parallel to that utilized in mainstream antitrust. The result is that the "open-ended' criticism is squarely put to rest and other issues raised by the court markedly recede. Furthermore, we show that the Telecommunications Act's competitor impairment concern is equivalent to competition policy's concerns for the competitive health and performance of a market. Thus, consideration of the competition policy-based standard reinforces the competitor impairment principles already developed by the Commission.

V.3. The impairment standard

(51) To implement the above concepts, we propose the following impairment standard:

> **Requesting carriers are impaired in their ability to provide the services they seek to offer if the consequence of failure to provide the requested network element poses a barrier or barriers to entry, including operational and economic barriers, and where the effect may be substantially to lessen competition, or to tend to create a monopoly in the provision of the retail services that utilize the requested element.**

(52) This standard appropriately retains from the TRO the focus on the presence and degree of economic and operational barriers to entry. But rather than focusing the standard on whether the impact of those barriers is to make entry "uneconomic" (which the court found "too open ended"), the impairment standard now links the presence of such barriers to their prospect for lessening competition. Unlike the open-ended nature of the "uneconomic entry" language, the lessening of competition standard brings with it both a set of discerning economic tools and rich case law from the antitrust economics and law arena. For instance, the antitrust enforcement officials, and courts have been able to successfully determine when mergers, exclusive dealing or price discrimination has created (or not) the prospect of lessened competition in markets since the passage of the Clayton Act of 1914. Marketplace characteristics, including the present market structure of the properly defined

relevant market, the ability of new firms to enter and expand, and the prospects for the unilateral exercise of market power all are well known central elements in such an analysis.[65]

(53) In adopting this standard, it is especially important to be clear on the meaning of two of the phrases in this proposed standard. First, competition may be "lessened" by either reduced supply from already existing CLECs in a market[66] *or* by reductions in the propensity to enter by prospective entrants. Also, in this regard, we note that the standard does not require non-provision of the requested element "to substantially lessen competition" but rather requires that the effect of non-provision "may be substantially to lessen competition." Thus, a clear and correct application of the standard does not **require** a demonstration that a lessening of competition occur, but rather that it **may** occur. Similarly, a correct application of the standard does not require that the magnitude of the impact on competition, should it occur, be "substantial," but rather simply that the effect is "to lessen competition." Second, the phrase "tend to create a monopoly" absolutely cannot be taken in isolation to mean that there is no problem with an action (here the denial of UNEs) so long as it does not result in only one provider in a market. Any action, here the withholding of one or more network elements, the effect of which "may be substantially to lessen competition" is prohibited. Thus, where the withholding of a UNE may "tend to create a monopoly" in any given relevant geographic market may be seen as *sufficient* to create a finding of impairment, it must be clear that the result of "monopoly" is not a necessary condition for the finding of impairment. Rather the necessary condition is simply that sufficient economic and operational barriers exist such that, but for the provision of the requested element, the effect may be substantially to lessen competition. Equivalently, wherever the failure to provide the

[65] The tools and methods to discern when an activity such as a merger, price discrimination or exclusive dealing will lead to the prospect for lessening competition is part of the ongoing practice of antitrust enforcement officials. In general, see the Department of Justice homepage. http://www.usdoj.gov/atr/. For a specific recent example in which the Department used standard antitrust economic tools to identify a situation in which there was likely to be lessening of competition, see United States v. Syngenta AG, Astrazeneca PLC, Koninklijke Cooperatie Cosun U.A., and Advanta B.V., http://www.usdoj.gov/atr/cases/f205100/205199.htm

[66] Reductions in the supply of extant CLECs in a market may be brought about by the emergence of, say, absolute cost advantages, that may accompany the elimination of UNE-based provision of network elements wherever alternative access to such elements is not available on costs terms akin to those enjoyed by the ILEC.

requested element on an unbundled basis may have the effect of increasing the market power by the incumbent relative to the case of provision of the element, an impairment finding is warranted.

(54) That said, this standard has several attractive features:

- The standard retains the Commission's focus on economic and operational barriers to entry (i.e., "structural impediments to competitive supply") that the court found to be an improvement from previous attempts by the Commission to establish an impairment standard.
- The standard directly responds to the USTA II court's criticism of the TRO-based impairment standard as "too open ended" by bringing to the table an accepted body of economic tools to discern situations in which the effect of non-provision of the element will have no effect on competition from situations where competition may be adversely affected.[67]
- The standard provides a means of resolving the "special access paradox" by more clearly focusing the impairment concept on the harm—or not—to competition that results from the denial—or not—of unbundled network access to requesting carriers. Specifically, because the USTA II court ruled special access was not "irrelevant" to the impairment issue, the Commission must, as part of the standard, allow for the possibility that in *certain circumstances* competition is not impeded if only an alternative ILEC offering, here special

---

[67] It is important to indicate that our approach eschews the earlier Commission position that unbundling should not be used to "remove an incumbent LEC's market power in the retail market" (TRO, ¶103). In particular, the present standard is not meant to remove or eliminate market power in the retail market, but rather is designed to enable competition. (See our discussion *supra* of this difference.) The consequence of this difference is that the proposed impairment standard is simultaneously squarely consistent with the Telecommunications Act's competition-enabling goals and is also deferential to the Act's de-regulatory aims by not dictating unbundling with the purpose of eliminating the incumbent's market power through regulatory fiat. Specifically, the question addressed by the instant standard is whether sufficient barriers exist such that—but for the provision of the UNE on an unbundled basis—the failure to require unbundling would impair or retard competitive supply. The determination, in turn, of whether competitive supply has been retarded or impaired hinges on whether failure to provide the element may substantially have the effect of lessening competition or tending to create a monopoly. This logically does not require unbundling up to the point of removal of the incumbent's market power in the retail market. We note, however, that in our opinion an impairment standard that more forcefully turns on the presence of workable or effective competition is consistent with the procompetitive goals of the Act.

access (and not UNE access at TELRIC rates) is available. At the same time, the court recognized the incentives of the ILEC "to set the tariff price as high as possible" and that it is undesirable to have a standard that allows ILECs to avoid unbundling requirements by simply offering the element at somewhat substantially greater than TELRIC rates.[68] Accordingly, the Commission must strike a balance that simultaneously reduces the prospects that the ILECs use their own tariffed offerings such as special access to circumvent the Act's unbundling requirements, while also reducing unnecessary unbundling requirements (viz., where the consequence of failure to do so does not "impede competition.") The proposed impairment standard does exactly this. Specifically, by focusing on the impairment standard more tightly on whether the effect of failure to provide the requested element "may be substantially to lessen competition, or to tend to create a monopoly," the standard ensures that the ILECs cannot use their own tariff offerings (e.g., special access) to impede competition by denying unbundled access where there may be deleterious competitive effects from doing so. At the same time, the same language in the proposed standard ensures that where the effect of failure to provide the requested element does not lessen competition or tend to create a monopoly—as in the case of wireless carriers' access to dedicated transport—then no unnecessary unbundling is required.[69] Importantly, as described in Section VII below, a variety of evidence from the TRO, state proceedings, publicly available sources, and CLEC interviews indicates that the same standard that in this case leads to the presumption that wireless carriers' access to dedicated transport is unimpaired strongly supports the conclusion that the availability of special access does not mitigate the impairment of wireline CLECs without access to dedicated loops and transport.

---

[68] The court recognizes that at some elevation of rates above TELRIC, competitors are impaired and that adjudication of when such a threshold has been crossed "might raise real administrable issues" for the Commission. USTA II at p. 33.

[69] We assume in this statement, arguendo, USTA II court's suggestion that competition in wireless markets is today able to "flourish" even though wireless carriers are denied UNEs access and are made to pay special access rates for dedicated transport. We have not conducted an independent assessment of the ultimate merits of this assumption.

- The standard is squarely consistent with the USTA II court's interpretation that the Telecommunications Act's purpose is "to stimulate competition" by focusing on "structural impediments to competition."
- The standard provides a sound platform for the establishment of specific impairment criteria (tests) that are sufficiently discerning to identify reasonably cases of impairment and non-impairment today, while simultaneously being sufficiently dynamic enough to accommodate the evolution of the industry structure with its consequent changes in the factual circumstances surrounding impairment.

VI. MARKET DEFINITION

(55) As noted by the USTA II court, "Any process of inferring impairment (or its absence) from levels of deployment depends on a sensible definition of the markets in which deployment is counted."[70] We agree and, in fact, under the revised impairment standard, the issue of market definition becomes, as in the antitrust arena, central to sound policy decisions. In the TRO, the Commission offered a compelling case for a "route by route" specification of the relevant geographic market for dedicated loops and transport.[71] The USTA II court, while not finding this market definition unlawful, did raise a couple of issues regarding the route by route analysis of dedicated transport.

(56) Specifically, the court suggested that the Commission "cannot simply ignore facilities deployment along similar routes when assessing impairment." Indeed, to press its point, the court identified the possibility of three points A, B, and C that are all in the same geographic area and "are similarly situated with regard to 'barriers to entry.'" In this case, the issue the Court raises is whether evidence of more abundant deployment on one route-pair might provide evidence that, despite a lower presence of current competitors, the other route is also unimpaired. As the court acknowledges, the Commission has, in fact, already pointed out why such higher deployment on one route is not sufficient to make a non-impairment finding along other routes.[72] The court's admonition, though, is that the Commission cannot ignore such deployment. We note, however, that to the extent that the correct market definition is, as we believe and the Commission previously found, route by route, the fact that these routes are different markets means that they cannot automatically be treated the same. Thus, the assumed hypothetical proffered by the court that the markets are "similarly situated with regard to the barriers to entry" is not a valid assumption, because the routes have been determined to be in different markets, and thus may not be similarly situated with respect to the height of entry barriers. Indeed, the absence of observed competitors on one of the route–pairs may well provide evidence that the two route-pairs are not similarly

---

70 USTA II, p. 15.

71 TRO at ¶402.

72 TRO at ¶401.

situated, and that unobserved barriers to entry exist on that route-pair. In that case, to place too much weight on deployment in "other" routes is contrary to the court's requirement that the Commission perform a "nuanced" and "granular" analysis rather than make sweeping generalizations.

(57) Also, the court suggested that the Commission has not yet explained whether the error costs (both false positives and false negatives) associated with a route by route market definition are likely to be lower than the error costs associated with alternative market definitions. This evokes two reflections. First, it is necessary to ask how likely it is that the Commission correctly identified the geographic market as route by route.[73] If the Commission employed sound judgment in its original choice of market definition, the probability of either false positives or false negatives falls and the associated error costs become *de minimis*. Second, given the possibility, however remote, that the Commission has erred in the determination of a route by route market definition, what are the policy consequences of false positives or false negatives under the impairment standard?

(58) The standard economic approach to geographic market definition draws upon the key concept of geographic demand-side substitutability.[74] Specifically, one begins by defining the smallest area that might be considered and asking the question, "Could a hypothetical monopolist that was the only present and future producer in this 'market' profitably impose a small but significant and non-transitory increase in price, holding constant the terms of sale for all products produced elsewhere?" If the answer is "yes," then the relevant market has been identified (because a monopolist over a well-defined, relevant market could and would impose such a price increase.) Alternatively, however, the answer may be "no" (i.e., the price increase would be unprofitable) because of consumers' willingness and ability to substitute for services offered outside of the proposed market. In this case, the proposed market definition must be expanded and the question re-posed. The process continues until the answer is 'yes."

---

[73] See footnote 1536 of the TRO, which states that "we define the relevant market for transport as route by route, and the relevant geographic market for enterprise loops as customer by customer."

[74] This approach is described in greater detail in the U.S. Department of Justice's and the Federal Trade Commission's Horizontal Merger Guidelines, Issued April 2, 1992, Revised April 8, 1997.

(59) In the case at hand, the demand-side geographic substitutability for telecommunications services, such as those provided by enterprise loops and transport is extremely low. Consider for instance, the consequence of a hypothetical monopolist over an enterprise loop between two points A and B. In this instance, the market definition exercise requires us to ask the question whether, in response to a small but significant and non-transitory price increase, the customer would substitute telephone calling to an alternative route, say from A to another point C. Such substitutability is extremely unlikely. Consequently, the Commission's determination of customer-by-customer and route-by-route markets for enterprise loops and transport, respectively, is entirely sound and highly unlikely to give rise to "error costs."

(60) The second issue is whether, given some possibility, (shown here to be remote) of error in identifying the relevant market, what are the policy costs associated with any false positives and false negatives? This matter is straightforward. In the case at hand, because demand-side geographic substitutability is virtually zero for telecommunications services, the only possible source of error costs would spring from a failure to account for the supply-side (i.e., entry and entry conditions) at *some* stage in the analysis. In particular, a correct analysis of impairment must account for the supply-side either by explicitly accounting for any geographic supply-side substitutabilities (across different routes) in the market definition process or, alternatively, by accounting for supply-side-based entry conditions in the specific impairment test. While both approaches may, theoretically, yield the same results, the critical factor that will reduce the error costs is that the Commission account for this supply-side substitutability at some stage.

(61) In the case at hand, the Commission has done so by choosing to use a conventional demand-side substitutability approach to the market definition process and to then to include supply-side (entry) conditions in the impairment test. Both the specification of the Impairment Standard (discussed in V.3 above), which focuses on economic and operational barriers to entry and the Impairment Test (discussed in VII below), which focuses on a presumption that with enough actual competitors in a given market entry barriers have been overcome, include a consideration of entry and barriers to entry (the supply-side). Consequently, as the court seeks, the error costs associated with the Commission's impairment standard and test have been minimized.

(62) Beyond this assurance, yet another consideration also reveals that the costs associated with alternative approaches to market definition are likely to be quite high. Specifically, as the court has recognized, the supply-side conditions associated with entry into any particular route/market are likely to be particularly nuanced. Consequently, any attempt to incorporate such nuanced considerations at the market definition stage will prove to be particularly unwieldy and administratively inefficient. Some markets, those with limited supply-side substitutabilities, would be judged route-pair markets for purposes of applying the impairment test, while other areas with higher supply-side substitutabilities would be judged to be larger market areas for purpose of the impairment test. Both the Commission and the court must surely see the prospect of such a jumbled menagerie of geographic market sizes as administratively impractical. In sum, the market definition chosen by the Commission, which focuses on demand-side substitutability is perfectly sound, and because supply-side considerations are taken into account by the Commission, the route by route and customer by customer geographic market definitions adopted by the Commission are economically sound.

VII. THE IMPAIRMENT TEST

(63) As with any guiding standard that is to have substantial discerning capabilities, the impairment standard we identify requires an accompanying practical test or sets of tests that can be readily applied to determine—with sufficient granularity—when a requesting CLEC is, in fact, impaired without the provision of unbundled access to a particular element. In that spirit, it is important to note at the outset that every test that satisfies the standards of administrative feasibility for the Commission will necessarily create the possibility of error costs associated with "false positives" and "false negatives." Specifically, any test, short of a full-blown, market-by-market inquiry of the nuanced barriers that exist in that specific geographic market and corresponding detailed analysis of the prospects for the lessening of competition that may result from the failure to provide UNE access will run the risk that "impairment" is found when, in fact, the truth (as judged with perfect information against the impairment standard) is "non-impairment." Similarly, any administratively feasible test also runs some risk of a finding of "non-impairment" when the truth is "impairment." In this section, then, we discuss the process by which one may logically proceed from the impairment standard outlined above to an impairment test in such a way that the Commission can be as confident as possible that its impairment test is both administratively feasible and minimizes unavoidable error costs.

(64) The error costs associated with an impairment test are not symmetric. Specifically, the costs associated with establishing an impairment test with high false readings of non-impairment (when, in truth, impairment exists) are asymmetrically higher than the error costs associated with false readings of impairment when "non-impairment" exists. If a finding of non-impairment is made when in fact a CLEC is impaired, then competition will not occur, with the attendant higher prices and reduced service for customers. On the other hand, if a finding of impairment is made when in fact the CLEC is not impaired, all that happens is that the CLEC can compete using either UNEs or its own facilities. The CLEC still has to pay the cost of the UNE it purchases, so the ILEC is unharmed. Indeed, given the choice between losing a customer to a CLEC with its own facilities or losing the customer to a CLEC that buys UNEs from the ILEC, the ILEC should prefer the latter.

(65) The process of determining whether impairment exists, then, involves a fact-specific and data intensive inquiry into the issue of whether, absent the provision of the element, new entry into local exchange markets is retarded or impaired. A well-established body of economic thought can fortunately, guide the basic approach to this exercise on the subject of barriers to entry and barriers to expansion and their associated competitive consequences. Specifically, where economic and operational barriers to entry and expansion for new entrants in specific local exchange markets are formidable and where the impact of denial of a requested element may substantially be to harm competition, then a finding of impairment is warranted.

(66) In that regard, there are two basic approaches to determining the strength of barriers to entry. Specifically, the economic literature has identified a number of underlying structural and behavioral determinants of both the presence and height of barriers to entry into a market. These determinants include, *inter alia*, consideration of the extent of sunk costs, economies of scale, first-mover advantages and absolute cost advantages of incumbents in the market.[75] The TRO gives appropriate attention to these barriers and the USTA II court decision found nothing critical to say about this focus. The second approach is to perform a detailed assessment of the actual level of entry into a market. In certain circumstances, discussed below, the level of entry may be sufficiently high and sufficiently informative about prospective entry that one may conclude that the magnitude of entry barriers is low.

(67) The *TRO* specified a two-step process that encapsulates both approaches to the assessment of the presence of barriers to entry. Specifically, the Commission examined the presence and magnitude of economic and operational barriers to entry and concluded that entrants were in general impaired in their ability to serve local exchange markets. Given the large number of markets involved when using the proper route-specific market definition, and the USTA II court's finding that a granular determination cannot be delegated to the states under the 1996 Telecommunications Act,[76] the Commission must turn to a second approach which is

---

[75] See our discussion, supra, and the extended discussion in the TRO.

[76] The USTA II decision said that the 1996 Telecommunications Act directed the Commission to make the determination of impairment, leaving open the question of whether the states could be the finders of fact in a triggers test, submitting the results of that fact finding to the Commission for determination of impairment by

administratively less unwieldy to determine whether CLECs are impaired on a route-specific basis.

(68) To make this route-specific determination, the Commission adopted in the TRO a so-called "triggers test," which simply assesses the magnitude of existing competitors' entry. If the magnitude of entry is sufficiently robust and unequivocal in the triggers analysis, then the more detailed, complete assessment of the magnitude of entry barriers can be avoided. The Commission can approach the task of finding exceptions to nationwide impairment in a number of ways. It is critical, however, that whatever method it adopts takes account of the entry barriers facing CLEC entrants in the transport market. As we discuss below, there are significant economies of scope and scale in dedicated transport markets, and evidence of **possible** competition is not the same as evidence that the CLECs can overcome the barriers to entry. Therefore, in the absence of unambiguous information about the presence of **actual** competitors, the Commission must rely on proxies or surrogates that correspond to the size of the market and the barriers to entry faced by the CLECs. In the state proceedings under the TRO, the ILECs proposed counting paired fiber-based collocations as one such proxy. In this Declaration, we discuss how this approach would need to be refined if it were to be used as the proxy. The Commission should compare this approach to other methods proposed by the parties, and select the method that corresponds as closely as possible to the underlying structure of the individual markets as possible.

(69) The Commission's findings in the TRO with respect to impairment of DS-1, DS3, and dark fiber loops and transport are generally sound. And indeed, additional considerations from state proceedings, from the interview process,[77] and from publicly available data sources continue to support the Commission's findings. Nevertheless, before the Commission could use the trigger conditions established in the TRO, it is necessary to make some modifications to those conditions. We will explain the rationale for these modifications and also discuss how they conform to the impairment standard we are proposing. We emphasize, however, that this method of assessing actual entry may not be the only or even the best method. We

---

the Commission.

[77] For this section, our interviews included CLEC personnel who are responsible for network engineering for their respective companies.

present a detailed analysis of the Commission's trigger test here only because it is the one most developed in the proceedings at the Commission and in the states. As we receive additional proposals by other parties, we will analyze them for conformance with our proposed impairment standard.[78]

VII.1. Loops

(70) As a general matter, the record in the TRO proceeding demonstrates that CLECs have limited presence in the high capacity loop market.[79] The CLECs have plant installed to only a small fraction of the nearly three million commercial buildings in the United States. Indeed, the TRO reports that data from both the ILECs and the CLECs shows that between 95 and 97 percent of the nation's commercial office buildings are not being served by *any* competitor-owned fiber loops.[80] For example, AT&T has stated that it has only 6,000 buildings connected to its local network via its own local loops—only about one half of one percent of the total buildings nationwide. This level of "self-deployment" however, certainly overstates the competitive capacity of such facilities because these statistics ignore the fact that CLECs often only have "fiber to the floor" arrangements, which prevents them from serving additional customers in the building without significant additional expense for multiplexers and cross connects.[81] Consequently, the competitive footprint that has emerged since 1996 and its prospects for expansion in the near term are largely reliant on the presence and availability of unbundled loop access. Indeed, there are a variety of economic and operational barriers that, in the absence of UNE-based access to dedicated loops will create the very real prospect of lessening competition. This lessened competition, in turn, creates the real prospect of a variety of deleterious consequences including reduced

---

78 The QSI report filed on October 4, 2004 by CompTel/ASCENT et al demonstrates that the number of actually deployed lop and transport facilities by CLECs is minimal, indicating the Commission has more than sufficient justification to make a determination of national impairment for these facilities at the capacity limits adopted in the TRO without additional trigger tests.

79 See TRO, at ¶¶298-301.

80 TRO, footnote 856.

81 See, e.g., Declaration of Michael E. Lesher and Robert J. Frontera on Behalf of AT&T Corp. at p. 18.

customer choice, higher prices, reduced competitive pressure on ILECs to reduce costs, and less pressure for innovation and new services.

(71) As the Commission found, there are substantial costs in laying fiber to a building, including the cost of the cable and conduit, as well as the cost of digging the trench to contain the conduit.[82] According to estimates cited in the TRO, trenching for conduit, which most business loops would require, costs from $17 to $30 per foot in suburban areas and from $70 to $100 per foot in urban areas,[83] while connecting a building to an existing transport network, including the fiber and the necessary electronics, averages about $250,000.[84] Because of these high sunk costs and significant scale economies, any carrier installing a fiber loop will be likely to lay fiber of sufficient size to meet expected demand, since it is more economical to "warehouse" spare capacity (or "dark fiber") than to dig up the street again later to add capacity. Since the ILECs have already laid fiber to most if not all of the commercial buildings in the United States, they have both sunk cost and first-mover advantages over any CLEC attempting to enter the market for dark fiber loops.

(72) In light of these facts, the Commission in the TRO made a sensible nationwide finding of impairment with respect to dark fiber loops. Installing a dark fiber loop into a building requires significant investment in the structure required to get the loop into the building. For a 500-foot loop in an urban area, the minimum costs of trenching under WorldCom's estimate would be $35,000, without considering the costs of the fiber cable itself or the expense for obtaining the right of way, let alone the costs of the cross connects and multiplexers that would be required to actually provision a loop.

(73) Comparing the revenue opportunity for DS-1 and DS-3 loops to the high sunk costs of laying fiber, the Commission also found similar impairment in the provision of DS-1 and DS-3 loops. However, recognizing that (1) the revenue opportunities for OCn loops were much higher than for DS-1 and DS-3 loops; (2) that OCn level customers were more willing

---

82 TRO at ¶312.

83 See WorldCom Comments at pp. 74-75.

84 See ALTS Comments at pp. 56-57; WorldCom Comments at pp. 74-75.

to sign long-term contracts that committed to significant revenue streams; and (3) that due to their business planning sophistication, such customers were more able to handle any service disruptions that might occur, the Commission found that carriers were not impaired with respect to any loops at or above an OC3 level.[85]

(74) Along with its nationwide finding of impairment for all but OCn loops, the Commission recognized that limited alternative deployment has occurred at particular customer locations "which could lead to a finding of no impairment for that loop type at that location."[86] Therefore, the Commission delegated to the states the fact-finding role to determine at which locations there was sufficient evidence to overturn the presumption of impairment. The Commission adopted a trigger approach, whereby non-impairment would be found at any specific location at which there were two facilities-based providers offering either retail or wholesale loop services of the relevant capacity on their own facilities. Although the USTA II decision overturned this delegation to the states, the Commission's approach to finding the exceptions to the nationwide determination is still valid and should be implemented at the federal level. Doing so would require the Commission to resolve issues that came up in the state impairment proceedings concerning these triggers.

(75) In the state proceedings launched under the TRO procedure, the ILECs identified specific buildings into which they believed CLECs had built loops. However, the ILEC claims as to the buildings served were overstated. The ILECs ignored or misrepresented the data the CLECs provided in response to discovery requests, used an inaccurate third-party database to identify buildings served by CLECs, claimed a CLEC providing one level of loop (e.g., DS-3) was able to provide all levels of loops, and ignored evidence that CLECs had loops to only a limited portion of a building.

(76) To determine that a CLEC truly is unimpaired in providing loop service at a particular bandwidth, the Commission also needs to determine how extensive the CLECs' access to the building is, and what barriers the CLEC faces to expand its facilities. The CLECs are

---

85 See TRO at ¶316. An OC3 is equivalent to 3 DS-3s.

86 See TRO ¶328.

often unable to gain access throughout the building, unlike the access typically given to ILECs, who bring their loops to a telecommunications closet or other common space in a building, and from there access customers throughout the building via riser cable. Building owners are often reluctant to allow additional carriers similar access to the building, effectively precluding competing carriers from being able to add additional customers within the building efficiently.[87] This first-mover advantage of the ILECs' means that they can provide loops to all customers within the building in a short time frame. Without access to the ILECs' loops at UNE prices, the CLECs will not be able to overcome the ILECs' first mover advantage in a timely manner, which will tend to reduce competition.

(77) In light of the generally sound analysis and overwhelming empirical evidence presented in the TRO regarding loop impairment, a straightforward proxy test (filter) for loop impairment can be stated as follows:

- OCn: No impairment.
- DS3 and DS-1: Nationwide impairment, except where it can be demonstrated that there are facilities owned and operated by at least two CLECs that provide service to similarly situated customers, where "similarly situated customers" is defined as customers in the same building who are receiving the same level (i.e., DS-1 or DS-3) of service or lower.
- Dark fiber: Nationwide impairment, except where two or more CLECs have constructed fiber to the building in which the customer is located. This is an easier standard to satisfy than the one used for DS3 and DS-1, because dark fiber will usually be leased by a CLEC that is planning to light the fiber at an OC-n level. A CLEC planning to light dark fiber and serve a customer with OC-n level service in a particular building will most likely be able to overcome the entry barriers associated with intrabuilding access and cabling.

[87] See TRO at ¶¶303-306.

VII.2. Transport

(78) In the TRO, the Commission required the ILECs to provide a dedicated transport network element, which was defined to be transmission facilities between ILEC switches or wire centers. Due to the substantial barriers to entry in the provision of this transport, primarily the high fixed and sunk costs of placing fiber,[88] the Commission found that CLECs were impaired on a nationwide basis without access to dark fiber, DS-3 (in groups less than 12), and DS-1 transport. However, the Commission also allowed the ILECs to make a showing in proceedings at the state commissions that these barriers to entry could be overcome on a route-specific basis, separately for each of these levels of transport, by demonstrating there were sufficient wholesale or self-provisioning providers of transport to overcome that nationwide finding. These triggers were established with different thresholds required for wholesale and self- providing CLECs. These requirements are summarized in the table below.

[88] TRO at ¶367.

Table 3: Summary of Current Self-Provisioning and Wholesale Triggers

	DS-1	DS-3	Dark fiber
Self Provisioning	**N/A**	**3 or more** • Operationally ready • Facilities terminate at each end of the route at a collocation arrangement at the ILEC premises	**3 or more** • Deployed own fiber or obtained on long-term lease • Facilities terminate at each end of the route at a collocation arrangement at the ILEC premises
Wholesale	**2 or more** • Operationally ready • Willing to provide immediately on a widely available basis • Requesting carriers can obtain access through a cross-connect	**2 or more** • Same as DS-1	**2 or more** • Same as DS-1 and DS3

(79) From an economic standpoint, the Commission's impairment determinations on dedicated transport in the TRO are consistent with the test proposed in this Declaration. The costs of deploying the fiber and structure used in the provision of transport are substantial, and both fixed and sunk. (These costs are detailed in the discussion *supra* on fiber loops, whose construction costs are similar on a per mile basis to the cost of a fiber ring.) No carrier is likely to deploy such facilities, especially in response to demand for a limited number of DS-1s or DS-3s, without the prospect of filling that facility. Indeed, all of the CLECs we interviewed indicated that a fiber build today requires a sufficient volume of existing business or a firm commitment from future customers, typically for at least a one-year term,

to a level of service that will ensure the investment will pay off. The ILECs have already deployed their fiber, and thus have a first-mover advantage, as well as not facing the up-front sunk costs that the CLECs must bear to build any transport link.[89] Therefore, the most compelling first step in proving non-impairment is the presence of abundant **existing competitive fiber-based transport** between two end-points in a network.

(80) In the state proceedings under the TRO, the ILECs attempted to overcome the nationwide finding by identifying office pairs that contained fiber-based collocations with the same CLEC in both offices. They then claimed that, absent specific evidence from the CLEC in question, that virtually all of the CLECs with the collocations were able to provide dark fiber, DS-3, and DS-1 transport on a wholesale basis. Hence, the ILECs argued that on routes where there were two CLECs with fiber collocations in the same two central offices (COs) all of the triggers were met.

(81) These ILEC attempts to demonstrate non-impairment in the state proceedings under the TRO were not based on any showing that the CLECs were offering the specific level—DS-1 or DS-3— of service on a wholesale basis, on the specific route in question. Rather, the ILECs made a leap of faith by ignoring or assuming away the costs associated with two crucial stages in constructing transport networks and making them operationally ready for wholesale business.[90] First, the ILECs assumed that if a CLEC was collocated at two separate ILEC central offices, then it was actively providing, or instantly capable of providing, circuits connecting these two offices. Second, the ILECs assumed that if a CLEC engaged in wholesaling any services and was also self-providing capacity on any transport route, then it should be counted as a wholesale provider on this route. Neither of these assumptions is correct, and as we now discuss, a truly workable and meaningful impairment

---

[89] In addition, the ILECs have already received substantial pricing flexibility for their Special Access services. Thus, they are well able to respond to any competitive offering from other carriers.

[90] This argument is inconsistent with the Commission's finding that there are substantial costs to provisioning DS-3 and DS-1 transport that render it uneconomic for carriers to self-deploy. At the DS-3 level, the Commission noted that scale economies made it unlikely that carriers could provision at the DS-3 level. (See TRO ¶386.) At the DS-1 level, the Commission correctly noted there are substantial additional costs to providing DS-1 service, such as additional multiplexers and back-office systems to handle ordering, provisioning, and billing.

standard must account for the additional barriers to entry associated with (1) provisioning and operating fiber-optic networks to make them capable of carrying traffic between two ILEC central offices and (2) wholesaling capacity at different levels to another CLEC.

VII.2.1. Transport cost structure and economics

(82) Transport networks consist of fiber rings, optical multiplexing equipment, electrical multiplexing equipment, patch panels, and cross-connect wires and cables. A schematic diagram of a hypothetical CLEC's transport network is shown below. The diagram shows the CLEC's equipment in the collocation space at ILEC Central Office #1 and corresponding equipment in the collocation space at ILEC Central Office #2. The CLEC's point of presence (POP) is also shown with the equipment necessary to light the fiber and establish cross-connections and multiplexing. The diagram also includes a box marking the POP of a second CLEC [labeled as "CLEC-BUYER"] that is the potential customer of the first CLEC.

Figure 2: Network diagram for dedicated transport

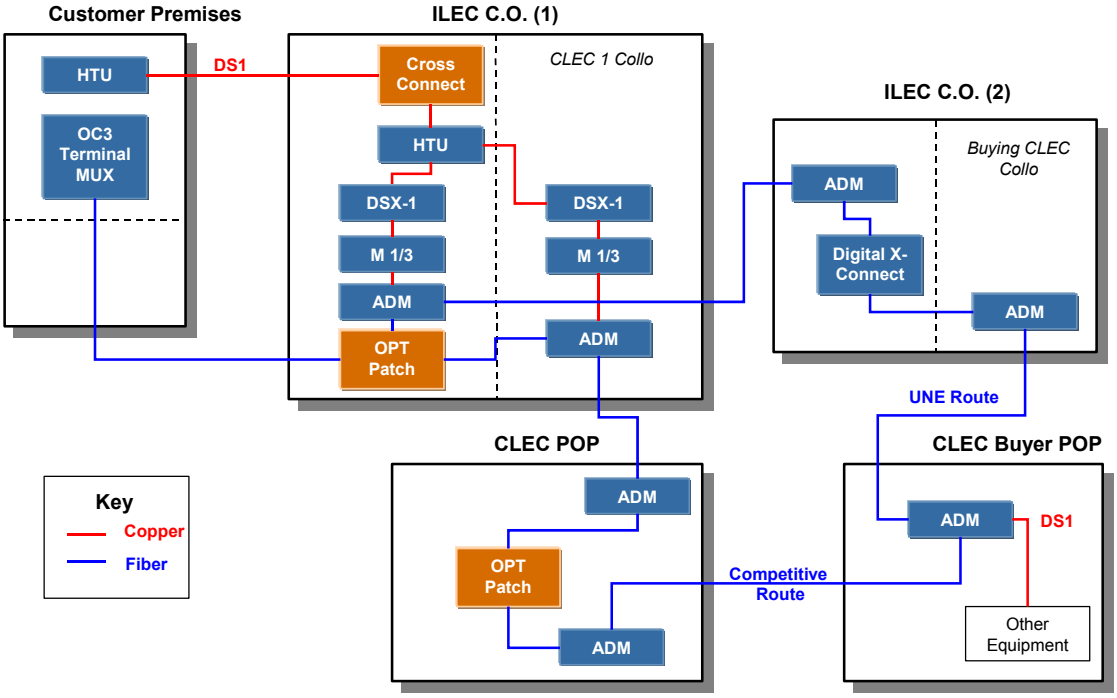

(83) Our analysis of these incremental entry barriers starts with the assumption that the CLEC's collocation in Central Offices #1 and #2 are properly identified. It is important to recognize, however, that most CLECs that deploy fiber to a collocation space are not using the fiber to carry traffic between multiple ILEC central offices.[91] Rather, the typical CLEC will build fiber to a CO in order to transport its own end-users' circuits (and any switched access traffic) back to its POP. Moreover, many CLECs do not connect all of their collocations to their POP on a single fiber ring.[92] Rather, as shown in our diagram, the two collocations in our hypothetical route are connected to the CLEC POP on two different fiber rings.

(84) In order to provide dedicated transport on the route between Central Office #1 and Central Office #2, the CLEC must cross-connect circuits from the two fiber rings. This will require the CLEC to install a new cross-connect if there is not one already in place. In addition, it will require the CLEC to augment any existing multiplexers or add additional ones. It is

[91] See, e.g., Declaration of Mike Duke on behalf lf KMC Telecom Holdings, Inc. filed in this docket, at ¶15.

[92] Id.

important to realize that there are economies of scale associated with much of this equipment, and hence the CLEC will not provide dedicated transport on this route unless it has a reasonable expectation of achieving sufficient scale in a short time frame. This means that there are barriers to entry in serving this market, and it is not reasonable for the Commission to assume away these barriers and treat the existence of a fiber-based collocating CLEC at each end of a transport route as outright evidence of non-impairment.

(85) Even if a CLEC overcomes these initial barriers to entry and turns up capacity on a particular route, this does not mean it is capable of providing wholesale service on a competitive basis with the ILEC's offering. We must keep in mind that if the **potential** wholesalers face cost disadvantages relative to the ILEC, then there will be a lessening of competition in the downstream markets in the event that UNE transport were unavailable. This would satisfy our definition of impairment.

(86) There are a number of sources for the entry barriers and cost disadvantages faced by potential wholesalers. We will demonstrate the significance of these cost disadvantages, which are greatest at the beginning and end of the route traversed when dedicated transport is sold on a wholesale basis by one CLEC to another. The first link on the route is the cross connection between the end-user's loop and the wholesaling-CLEC's collocation space. Even though the CLEC will already have cross-connections in place for its own traffic, it will need to add cross-connection capacity to handle other CLECs' business. There are also costs associated with augmenting an existing collocation to handle the power and space requirements of additional circuit equipment. Both categories of cost require significant up-front expenditures by the potential wholesaler, which create scale economies with respect to this important cost element in the process of wholesaling capacity.[93] Therefore, unless the expected demand for capacity is great enough to offset scale diseconomies, the potential wholesaler will not become an actual wholesaler.

---

[93] For example, in Pennsylvania, New Jersey, and Virginia, Verizon charges a $2,500 application fee to augment a collocation arrangement, in addition to a $1,095.88 one-time fee to augment the collocation space. See PA PUC Tariff No. 18, p. 55, BPU NJ Tariff No. 4, p. 55, and SCC VA Tariff No. 218, p. 55. In New York, Verizon also assesses a $1,334 non-recurring charge for augmenting power. See PSC No. 18, p. 27.

(87) These costs constitute barriers to entry that the CLEC must surmount prior to wholesaling interoffice capacity at a particular bandwidth or to an individual CLEC. It is appropriate to regard these costs as barriers to entry because they involve sunk costs, are subject to economies of scale, and to some degree are costs that the ILEC does not incur, (e.g., collocation and cross-connections to the loop network.).

(88) The last link in the circuit is to connect this dedicated capacity to the Buying-CLEC. It important to keep in mind that this CLEC's demand for interoffice dedicated transport is actually a derived demand for transport between the ILEC's central offices and its own POP. There are two possible ways for the wholesaling CLEC to make this connection with the Buying-CLEC. First, the wholesaling CLEC could connect to the Buying-CLEC's entrance facilities at Central Office #2. Second, the wholesaling CLEC could connect directly from its POP to the Buying-CLEC's POP. In either case, there are large costs associated with establishing this link.

(89) The first scenario of a handoff at Wire Center #2 has several problems. Certainly if the Buying-CLEC is not collocated at that Wire Center, the wholesaling CLEC may not be allowed to connect to the Buying-CLEC's entrance facilities. And even if the Buying-CLEC is collocated, the costs involved in establishing cross-connections between the wholesaler and the buyer will be burdened with diseconomies of scale and sunk cost. The second scenario, which involves a dedicated fiber link connecting the two CLECs, will not be cost-effective, unless there is a need for substantial capacity on this direct link. Based on discussions with CLECs, we have learned that smaller and mid-sized CLECs interconnect with few CLEC transport providers. This is due to the large economies associated with connecting two networks together. The scale economies are especially pronounced at small levels of demand. One CLEC will not be able to purchase transport at low capacity levels from another CLEC without incurring a substantial cost penalty associated with creating and operating an interconnection trunk between the two CLECs.

(90) The conclusion we draw from this analysis is that the existence of a CLEC with fiber-based collocations at both ends of a transport route does not guarantee this CLEC is now or can become an efficient provider of wholesale transport service to other CLECs. Therefore, a simple trigger approach that relies on the presumption of a wholesale market should not satisfy the impairment standard we discussed in Section IV. We will now discuss our

recommendation for a more rigorous and defensible approach to assessing the presence and potential for competition in a dedicated transport market.

VII.2.2. Dark Fiber and DS-3 Transport

(91) Due to the presence of economic barriers to entry, the Commission should reconfirm its findings of nationwide impairment for dedicated transport for DS-3 and dark fiber. There should be a rebuttable presumption of impairment except where there is sufficient evidence of actual competition that would allow the Commission to determine that the barriers to entry have been overcome.

(92) There are several possible means for the Commission to remove the rebuttal presumption of impairment. As noted above, the ideal method (absent high administrative costs of doing so) would be for the Commission to analyze evidence in each individual market to determine the extent to which competition actually exists. Alternatively, the Commission could examine surrogates that may provide imperfect, but administratively less costly, identifiers of when a market is unimpaired. Because these are surrogates—rough approximations of what actually exists in terms of current or future deployment of facilities—the Commission needs to proceed very cautiously in implementing them. A number of surrogates may exist, including, for instance, measures of the size of the market relative to some indication of the minimum viable scale of operations in that market. Finally, the Commission could gather data that suggests, albeit imperfectly, that actual competition may be sufficiently present in a market to overcome the presumption of impairment. Without judging the relative merits of the latter two approaches, we discuss just one alternative: relying on the number of fiber-based collocations on both ends of a route as a means of implementing the impairment standard.[94] We plan to discuss other alternatives as those are proposed and information becomes available.

---

[94] There are significant barriers to the deployment of fiber-based collocations on both ends of a route. These include not only the cost of building infrastructure but the cost of becoming a wholesaler and the limited market the CLEC confronts because of the lock-in provisions of ILEC provided special access services.

(93) Evidence of a given number of CLECs with fiber collocations on each end of a route ("paired collocations") is an indication that competition may exist at a DS-3 level or for dark fiber on this route. As we saw in the state proceedings, however, this is not the same as evidence that competition **actually exists** on the route.[95] As we discussed in the previous section, there are many barriers to competition that a CLEC must still overcome, prior to its entry into the wholesaling of DS-3 capacity or dark fiber on a particular route. Therefore, it may be possible to use a benchmark number of possible competitors, as indicated by the count of fiber based collocated carriers on a route, that would be reasonably equivalent (in an expected-value sense) to the desire benchmark number of "actual competitors" used in the TRO.

(94) Logically, the possible-competitor benchmark should exceed the number used—three—for self-provisioned firms used in the TRO. The reason is that self-provisioned firms must have already made the investment necessary to connect the two end-points of the circuit to be counted as actual, self-providers. By contrast, CLECs with paired fiber collocations most likely have not made that investment. It is reasonable to deduct at least some of the possible-competitor firms to account for the fact that some of these firms will not connect to the two ends, at any capacity level. In addition, we believe that the Commission underestimated the costs faced by a self-provider considering entering the wholesale market.

(95) All of these factors suggest that not all CLECs who have collocations in a pair of ILEC COs will be able to overcome the barriers to entry to providing wholesale service. Thus, to have the "expected value" of wholesale CLEC providers on a route to be two, as the Commission found sufficient in the TRO, the number of CLECs who have collocations in the two offices that define a route should be greater than two. If the ILECs choose to rely on only this evidence of wholesaling, there should be more than two CLECs required with collocations in the two offices. This will make it more likely that there are at least three CLECs that are actually providing service, or two who are likely to become wholesale providers on the route.

---

[95] See, e.g., Direct Testimony of Michael Pelcovits, submitted for MCI on January 9, 2004, in PA PUC Docket No. I-00030099, at pp. 89-90, noting that a CLEC collocation may exist solely for the purposes of providing loop concentration to its own switch, or for housing a DSLAM to provide DSL service to end users.

(96) However, the Commission should note even the presence of three competitors in a market may be insufficient to ensure a competitive outcome. For example, the Merger Guidelines, which outline the enforcement policy of the Department of Justice and Federal Trade Commission concerning horizontal acquisitions and mergers, tends to consider a market to be "highly concentrated" when the number of competitors of the same size is roughly six or less. While data recently published by the enforcement agencies suggest the *de facto* standard may be somewhat less stringent than the one promulgated in the Guidelines, from these data it appears reasonable to conclude that antitrust enforcers are concerned with mergers that reduce the number of significant competitors below five and certainly four.

(97) Thus, in order to promote transparency in merger enforcement, the Federal Trade Commission staff recently reviewed and published data regarding its horizontal merger investigations during fiscal years 1996-2003.[96] The staff tabulated information on market structure as it relates to the Commission's decision whether or not to seek relief in the specific markets investigated. For example, the FTC compiled data on whether it sought relief or closed an investigation depending on the number of significant competitors before and after the proposed merger. Data for 573 relevant markets were used in the FTC's analysis. These data suggest that mergers that reduce the number of significant competitors from five to four, and certainly from four to three, are likely to receive an antitrust challenge. For example, of the 573 markets investigated, 52 involved mergers that would reduce the number of competitors from five to four. Of these 52 markets, there were 32 enforcement actions (62 percent of the total). Another 134 markets involved mergers that would reduce the number of competitors from four to three. Of these 134 markets, there were 102 enforcement actions (76 percent of the total). Thus, requiring the presence of only three carriers on a route would be a conservatively low threshold for indicating impairment.

[96] See Federal Trade Commission, *Horizontal Merger Investigation Data, Fiscal Years 1996-2003* (February 2, 2004).

VII.2.3. Impairment exists nationwide for DS-1 transport

(98) The Commission recognized in the TRO that CLECs are impaired without access to DS-1 capacity transport.[97] This determination was made "based on the high entry barriers associated with deploying or obtaining transport used to serve relatively few end-user customers" and record evidence that competing carriers cannot self-provide DS-1 transport.[98] However, the Commission also stated that DS-1 transport is not generally made available on a wholesale basis.[99]

(99) Based on our knowledge of the marketplace, we believe that this assessment by the Commission of the situation in wholesale markets remains valid today. Our interviews with CLECs reveal that few offer DS-1 on a wholesale basis and few CLECs purchase DS-1 capacity from other CLECs. In this section, we will discuss the reasons why the wholesale DS-1 market has not developed, and is unlikely to develop in the near term.

VII.2.4. Cost of providing DS-1 capacity between two ILEC central offices

(100) A CLEC that is currently collocated and interconnected with the ILEC at a DS-3 level has the potential of also interconnecting at a DS-1 level. As discussed above, the CLECs are impaired without access to DS-3 transport, so there is all the more reason to believe that they will also be impaired without access to DS-1. In addition, even if the CLECs are not impaired without access to DS-3 transport, there are substantial additional costs associated with effecting interconnection at the DS-1 level. These costs correspond to the two categories of cost discussed earlier in the context of the impairment standard for DS-3 transport: costs related to "first link" between the end-user's loop and the wholesaling CLEC's collocation; and costs related to the "last link" between the wholesaling CLEC and

---

97 TRO ¶244.

98 TRO ¶¶244, 245.

99 TRO ¶392.

the buying CLEC. These entry barriers are even larger in the DS-1 market compared to DS-3 market.

(101) To provide DS-1 service, the CLEC must install an M1/3 multiplexer and associated cross connection frames and power supply. The cost of an M1/3 multiplexer is approximately $2000; the cost of frames and power supplies would increase this even further. The CLEC would incur a large cost-penalty relative to the ILEC on this equipment alone, if it could only spread its cost across a small handful of DS-1 orders. The fees paid to the ILECs for cross connection are also substantial and exhibit significant scale economies.

(102) Because of the substantial recurring charges for these cross connections, it would be inefficient for the CLEC to "order in bulk" well in advance of demand, because it would have to pay the recurring rates for the circuits it did not use. The ILECs, of course, do not face these costs. The result of this process is that the cost structure of the first link of a DS-1 transport for the CLEC will demonstrate significant scale economies.

(103) The costs associated with the "final link" connecting the wholesaling CLEC to the buying CLEC was covered in Section VII.2.1. There are significant economies of scale associated with this cost element, and without question this will create a substantial cost penalty for CLEC wholesale of DS-1s relative to the ILEC. In addition, there are costs associated with developing compatible ordering and provisioning systems, which were mentioned by some CLECs as a significant cost factor.

(104) Based on discussions with CLECs, we have learned that smaller and mid-sized CLECs interconnect with few CLEC transport providers. This confirms our own analysis of the economic barriers to entry in the market for wholesaling DS-1 transport. Therefore, we would expect that with the possible exception of some extremely high capacity transport markets (e.g., Manhattan), the CLECs will not be able to obtain DS-1 transport on a competitive basis. And if the ILECs are not required to provide DS-1 UNEs, the CLECs will lose their ability to compete in the large and vital retail markets that rely on DS-1.

VII.2.5. Proposed impairment test for DS-1

(105) We propose that the Commission reconfirm its previous finding of nationwide impairment for dedicated transport at the DS-1 level. There should be a presumption of impairment for DS-1 transport on all routes, which can only be overcome if there is clear evidence that two or more carriers (unaffiliated with the ILEC) are presently providing wholesale DS-1 service on the route. This evidence should be limited to the certification by the CLECs themselves that they are currently offering DS-1 transport on a wholesale basis along the specific route. It is reasonable to rely on self certification, because the CLECs that are in the wholesale business would prefer to have the UNE delisted, which may stimulate their business prospects. This would be fully consistent with the Commission's previous ruling, and would also clarify what evidence could be relied upon to demonstrate that there was **actual** competition in the market.

(106) In contrast to the situation for DS3 or higher transport, we believe that the mere presence of CLECs with fiber-based collocations at both ends of an interoffice transport route is not probative of the availability of competing alternatives to the CLEC for DS-1 capacity transport. Even a CLEC with interoffice capacity faces significant additional costs to enter the wholesale market for DS-1 transport. These costs constitute barriers to entry that the CLEC must surmount prior to wholesaling interoffice capacity at a particular bandwidth or to an individual CLEC. It is appropriate to regard these costs as barriers to entry because they involve sunk costs, are subject to economies of scale, and to some degree are costs that the ILEC does not incur (e.g., cross-connections to the loop network). There is no threshold number of fiber-based collocating CLECs that can be used as a proxy or substitute to predict when these barriers can be overcome. Therefore, we believe that the only way for the presumption of impairment to be removed is if there is sufficient actual competition at the DS-1 level along a particular transport route.

VIII. THE IMPAIRMENT TEST AND SPECIAL ACCESS

(107) As described in Section V.3 above, the proposed refinement to the Commission's impairment standard is sufficiently robust to accommodate the "special access paradox." In this section, we describe why it is that while dependence on special access availability (as opposed to unbundled network elements) may not presently "lessen competition" and, hence under the strict terms of Section 252 (d) (2) of the Act impair wireless, the opposite is certainly true for wireline carriers. Specifically, two important market characteristics give rise to different factual conclusions. First, the market for wireless services has been incredibly dynamic. Demand growth has been staggering and novel pricing features and plans have, with the opening of PCS spectrum, added to an already frenetic level of market activity.[100] Second, within this dynamic environment, it is important to recognize that while non-ILEC wireless companies face a cost disadvantage (relative to ILEC wireless carriers) as a result of facing special access rates rather than TELRIC-based costs, wireless carriers' costs of dedicated transport is a only a small share of the typical wireless carrier's costs. Indeed, the costs of dedicated loop transport for non-ILEC wireless carriers typically constitute only a small percent of the firm's total costs. For example, as noted by Richard Gilbert, economist for the merging parties in the AT&T Wireless and Cingular Wireless transaction, special access costs were less than three percent of AT&T Wireless' total operating costs in 2003.[101] The consequence of the dynamic wireless arena and the low-cost shares of dedicated transport consequently mean that it is difficult to observe that under current market conditions the inability to secure unbundled access at TELRIC rates may have the effect of lessening competition.[102, 103]

---

[100] It is also important to note that wireless competition may not continue to be as robust as the Court cited.. The wireless companies owned by the RBOCs are currently the largest wireless companies in the United States. If they are able to raise their rival wireless companies' costs by imposing above-cost special access charges, they may be able to place their rivals in a price squeeze.

[101] Supplemental declaration of Richard Gilbert, fn. 48, http://gullfoss2.fcc.gov/prod/ecfs/retrieve.cgi?native_or_pdf=pdf&id_document=6516184423 (visited September 24, 2004).

[102] Interestingly, as wireless markets mature and price-cost margins in the wireless arena continue to fall, the present

(108) In stark contrast to the wireless carriers, however, the market for wireline local exchange services is growing at only modest levels creating more of a "zero-sum-game" environment. The consequence is that it is far more tempting for the ILEC to attempt to maintain its market position by posturing to eliminate UNE access, offering higher priced alternative services (viz., special access) and to then engage in a vertical price squeeze. The ability to do so is accentuated by the vastly different cost structure facing these carriers. The cost of loops and transport is a substantial portion of the total cost of the service bundles sold to business customers. For example, out of the typical $1000/month telecommunications service package purchased by a business and provided on a DS-1, the loop and transport portion will cost approximately $200/month, when purchased under the UNE tariffs. By comparison, the **same** loop and transport services purchased under special access will cost approximately $550/month.[104] This means that elimination of loop and transport UNEs would have a devastating effect on the CLECs, and prices would increase substantially in the markets served by the CLEC.

(109) A recent study estimated that the elimination of DS-1 loops and transport service purchased under UNE tariffs would lead to price increases in retail markets of 25 percent and a decrease in consumer welfare of approximately $4.9 billion annually.[105] The study measures only the loss from the elimination of DS-1 UNEs; there would be substantial additional losses from the elimination of DS3 UNEs. The estimate was generated by an economic model utilizing the "dominant firm—competitive fringe" pricing model. The model postulates that the dominant firm maximizes profits, subject to the constraint created by the supply decisions of the competitive fringe. When the competitive fringe is presented with a

---

inability to observe a lessening of competition associated with the failure to provide UNE-based access to dedicated transport for these carriers may change. We note that our proposed standard is robust enough to accommodate this possibility; namely, that an unimpaired market today may become impaired in the future.

[103] This does not imply that the ILECs cannot use their control over special access to harm competitors in the wireless market. By raising rates for special access, or even more importantly, by degrading the quality of access provided to their wireless competitors, the ILECs could dramatically alter the competitive situation in the wireless market. The Commission must remain diligent and attuned to the powerful incentive and ability of the ILECs to disrupt competition in the wireless market through price and non-price means of discrimination against rivals.

[104] Microeconomic Consulting and Research Associates, *The Economic Impact of the Elimination of DS-1 Loops and Transport as Unbundled Network Elements*, June 29, 2004.

[105] Id., at p. 10.

massive input price increase (not shared by the dominant firm), it will reduce supply, and the dominant firm will be able to increase its market share and its price in the retail sector The results are robust for any reasonable specification of the model, and are fully consistent with a common sense understanding of the likely outcome when all but one firm in a market are faced with a massive input price increase. It is difficult to conceive of any definition or interpretation of the impairment standard that would treat this competitive distortion as conforming with the requirements of the Act.

(110) The ILECs are likely to argue that the comparison between UNEs and month-to-month special access rates ignores the availability of special access term and volume discounts. We believe that the only valid comparison is for special access and UNEs purchased under similar terms and conditions. UNE prices apply to month-to-month purchases. No volume or term discounts are available, so the only apples-to-apples comparison must be to special access month-to-month rates. Term and volume commitments come at a cost to the purchasers, which cannot be ignored in comparing the two ways of buying loops and transport. Customer churn for a competitive industry can be substantial and make term plans risky. Volume commitments are also risky and costly to CLECs because they restrict their ability to shift traffic onto newly built facilities. Furthermore, there is absolutely no guarantee that the ILECs will maintain discounts at current levels, because under the Commission's pricing flexibility rules, the ILECs have the ability to change rates at will.

(111) One of the greatest dangers associated with eliminating UNEs is that it opens the door to the ILECs to engage in strategic behavior that would stymie new facilities builds by the CLECs. Therefore, it would be contrary to a fundamental goal of the unbundling regime, which is to enable CLECs to reduce the risk associated with building out more facilities, by building up a customer base using network elements leased from the ILECs. The ILECs have already demonstrated their willingness and ability to engage in anticompetitive pricing practices in the special access market, and harm competition. In particular, the ILECs have instituted exclusionary pricing schemes for special access that restrict the ability of customers to obtain services from the ILECs' competitors.

(112) Some examples of the ILECs' exclusionary pricing are discount plans that require customers to commit for the entire term of the contract to continue purchasing services worth 90 percent or more of current spending levels from the incumbent. Although described as

discounts by the ILECs, these pricing practices are more accurately described as penalties that punish customers that attempt to "defect" and shift demand to competitors. Another example is a condition in tariffs that require a certain percentage of purchases under the plan to be previously provided by a CLEC. Some of the plans actually "pay" the customer to use more of the ILEC's special access service.[106]

(113) Exclusionary pricing schemes are recognized by the economics literature and the Courts as potentially dangerous to competitive markets. In a seminal article published in 1991, "Naked Exclusion," Rasmusen, Ramseyer, and Wiley present a model where a monopolist induces enough buyers to sign exclusive contracts, such that there is insufficient demand available to other firms to enable them to enter the market and operate profitably.[107] The exclusion is "naked," meaning that it is "unabashedly" meant to exclude rivals and for which there is no efficiency justification.

(114) A recent federal appellate court decision concluded that exclusionary pricing practices in markets dominated by a single firm may violate the antitrust laws. In *LePage Inc. v. 3M*, 324 F.3d 141 (3rd Cir. 2003), the Court of Appeals affirmed the judgment of the district court that 3M's exclusionary conduct could sustain a verdict that 3M violated U.S. antitrust law. In *LePage*, 3M used its dominant market power in the transparent tape market to meet the competition that LePage threatened by "exclusionary conduct that consisted of rebate programs and exclusive dealing arrangements designed to drive LePage's and any other viable competitor from the transparent tape market."[108]

(115) It is clear from the ILECs' past behavior in special access markets, that the prices of this so-called alternative to UNEs are being manipulated to thwart competition, whether the competition is in the local transport market or in the retail markets that depend on dedicated

---

[106] Declaration of Michael D. Pelcovits on Behalf of WorldCom, Inc. Docket RM No. 10593.

[107] Eric B. Rasmusen, J. Mark Ramseyer, and John S. Wiley, Jr., "Naked Exclusion," *American Economic Review*, December 1991, pp. 1137-45. Subsequent articles on the same topic include: Ilya R. Segal and Michael D. Whinston, "Naked Exclusion: Comment," *American Economic Review*, March 200, pp. 296–309; Robert Innes and Richard J. Sexton, "Strategic Buyers and Exclusionary Contracts," *American Economic Review*, June 1994, pp. 566-84.

[108] *LePage*, 324 F.3d at p. 154.

loops and transport. Until the interLATA restrictions were lifted from the RBOCs, their strategy was to deter competition for their intraLATA toll services by creating these exclusionary pricing schemes. Now that the RBOCs are free to compete in all retail interLATA markets, they will have the incentive and ability to abuse their control over dedicated loops and transport to harm competitors. Pricing of special access will be a powerful, and under the current Commission rules, largely unregulated, weapon that will be used by the ILECs to gain an unfair and artificial advantage over their rivals.

(116) The ILECs would be able to put competitors into an immediate price squeeze, if competitors could no longer use cost-based UNEs. There is abundant proof that special access is priced significantly above cost, and that neither competition nor regulation constrains prices effectively. The first piece of evidence is the comparison between UNE prices and special access prices for DS-1 loop and transport discussed above. Special access prices are uniformly higher than UNE prices across all states, which have set the cost-based UNE rates independently. The second piece of evidence is the staggering rates of return the ILECs are now earning on special access. In 2003, the earnings averaged 43.7 percent for all of the RBOCs.[109] These earnings have been increasing since pricing flexibility was first allowed in 1999.[110] The third piece of evidence is that the RBOCs have taken advantage of pricing flexibility to raise special access rates **in the geographic areas no longer subject to price caps**.[111] This fact, by itself, proves that the supposed alternatives to ILEC loop and transport are not exerting much of a constraint on prices for these services. Given this experience over the last several years, it is inconceivable that the ILECs would not take the opportunity created by the elimination of UNEs to put the CLECs into a price squeeze by maintaining lower prices on retail services, as their competitors face a large input cost increase.

---

109 FCC ARMIS Reports 43-01, pp. 43-04.

110 Economics and Technology Inc., Competition in Access Markets: Reality or Illusion, August 2004.

111 George S. Ford and Lawrence J. Spiwak, "Set It and Forget It? Market Power and the Consequences of Premature Deregulation in Telecommunications Markets," Phoenix Center Policy Paper No. 18, at p. 13 (July 2003).

(117) The possibility of imposing the regulatory "band-aide" of imputation (i.e., requiring that the price of special access be imputed into the retail-stage prices of the ILEC) is demonstrably an inadequate solution.[112] Moreover, not only would such a "solution" be ineffective, it is also totally contrary to the paradigm of the Telecommunications Act of 1996. The Act approaches the problem of ILEC market power over the upstream products by requiring the Commission to establish controls over the pricing and availability of these products. This is the most direct way to prevent the ILECs from leveraging their market power into downstream markets and also to encourage the ILECs' rivals to enter into the upstream market, as conditions allow it. A major benefit of this policy is to obviate the need to regulate the multitude of downstream services that depend on the monopolized inputs.

(118) If, contrary to this logical approach, the Commission were to eliminate the UNE requirements while the ILECs still had the ability and incentive to leverage their upstream market power, this would be inviting the ILECs to "take their best shot" at harming their rivals. The temptation would be irresistible, and the Commission would be forced to inspect the retail pricing of the ILECs across an ever-widening array of retail products. This would create an entirely new layer of regulation requiring assignment of substantial resources by the Commission. A new "Imputation Division" of the Commission would have to look at the detailed price structure of all such retail products, and also analyze the downstream activities of the ILECs to test whether the tariffed special access rates were actually being imputed into the final goods prices. This is a nightmare scenario, predestined to failure.

(119) Nor is it correct to presume that the success of certain CLECs that presently use special access is proof that CLECs are not impaired without UNEs. The CLECs that "voluntarily" choose to use a higher-priced alternative have a number of reasons for relying on special access. These include situations where: 1) CLECs have committed to long-term contracts for special access and would face large termination penalties to switch to UNEs; 2) CLECs have well established, and generally effective, ordering and provisioning systems established for

---

[112] See T. Randolph Beard, David L. Kaserman and John w. Mayo "On the Impotence of Imputation," *Telecommunications Policy*, Volume 27, Issues 8-9, September-October 2003, pp. 585-595.

special access; 3) a complex and confusing array of use restrictions and commingling bans make it costly for certain CLECs to use UNEs; 4) special access is used in cases where the price differences are small (e.g., short mileage transport); and 5) ILECs claim to have no facilities available.

(120) It is our understanding that CLECs that continue to use special access will elaborate on these reasons and explain why they use special access in their own filings to the Commission. What is important to understand from an economic perspective is that conduct and performance in the many retail markets where the CLECs depend on ILEC-provided inputs is fragile and vulnerable to anticompetitive behavior by the ILECs. The fact that some CLECs buy special access instead of UNEs is only a single snapshot of a small part of the competitive landscape. All it proves is that some CLECs have either been enticed away from UNEs with customized pricing plans or have been compelled to use a high-priced service because the ILECs have raised their cost of using UNEs.113 This does not mean that competition in the retail markets has not already been lessened by the ILECs' behavior, or that the ILECs could not create even greater competitive distortions if they were freed from the obligation to provide UNEs.

(121) The consequence of these considerations, then clearly support a Commission finding that, despite the possibility that wireless carriers may be unimpaired without UNE access to dedicated transport, the wireline CLECs are, and for the foreseeable future will remain, impaired without UNE access to dedicated transport at the DS-1, DS3, and dark fiber levels. More generally, while the availability of special access is not "irrelevant" to the impairment standard, it does not alter the conclusion that wireline carriers remain impaired without access to DS-1, DS3, and dark fiber loops and transport as we have described.

[113] The costs include not only the "official" TELRIC price, but also any costs associated with ordering provision and quality maintenance.

IX. THE IMPAIRMENT TEST AND INTERMODAL ALTERNATIVES

(122) Another factor to consider in determining whether or not there is impairment is the extent to which intermodal alternatives, such as wireless (fixed or mobile) and cable, provide meaningful substitutes. There are two levels at which such alternatives could be considered when evaluating impairment. The first is whether CLECs themselves could use such alternatives to provide services to their customers that otherwise rely on DS-1, DS-3, and dark fiber loops and/or transport.

(123) Secondly, even if CLECs are not able to use these alternatives, under our proposed standard, there could be non-impairment if customers themselves are able to procure such services directly from providers of wireless or cable services. Recall that our proposed impairment standard indicates that requesting carriers are impaired only if the failure to provide the requested network element creates a barrier whose effect may be to *substantially lessen competition*. Thus, even if requesting CLEC carriers cannot utilize such alternatives, under our proposed standard there would not be impairment if customers themselves could turn to such alternatives and the existence of such alternatives provided a "sufficient" check on the ILECs.

(124) The vast majority of the CLECs with whom we spoke indicated that wireless (either fixed or mobile) does not provide a viable alternative for them to provide the services they normally provide via DS-1, DS-3, and dark fiber loops and/or transport.[114] A number of CLECs noted that in their marketing areas, wireless providers were simply not available.[115,116] Others noted that the current technology of wireless provision limits the services that can be

---

114 Discussions with **BEGIN PROPRIETARY END PROPRIETARY**

115 Discussions with **BEGIN PROPRIETARY END PROPRIETARY**

116 Data from the FCC indicates that there is little deployment of wireless services for advanced services. Thus, based on Table 2.1 through 2.4 of *Trends in Telephone Service*, May 2004, satellite and fixed wireless comprised one percent of all high-speed lines with 200 kbps in at least one direction, and 0.4 percent of all high-speed lines with at least 200 kbps in both directions. Eliminating residential and small business lines from these totals results in satellite and fixed wireless penetration of .7 percent in one direction .8 percent in both directions.

provided.[117] While there may be potential for wireless in the future, the CLECs indicated this technology is neither sufficiently developed nor widely enough available to provide a meaningful alternative in the near term.

(125) Others noted a number of other practical problems with wireless as an alternative. For example, one CLEC indicated that it had a small wireless trial.[118] This carrier indicated it was evaluating wireless as a means of augmenting, but not replacing, its DSL services. However, given the immaturity of the marketplace for this technology, and its limited penetration, it could not make a substantial commitment to this technology for the foreseeable future. That is, a substantial commitment to wireless involves sunk costs requiring network redesign, new equipment, and training. It would not be willing to take these risks given the uncertainty that there will be significant providers of such services.

(126) There also appear to be a number of practical problems involved in wireless deployment.[119] For example, gaining rooftop rights in commercial office buildings to place antenna equipment has proven extremely difficult. Also difficult is negotiating rooftop access to ILEC Central Offices. Additionally, the technology of fixed wireless communications is limited to short haul applications and requires a direct line of sight between the customer location and the provider's network. This can limit applicability or reduce quality. Finally, wireless communications can be affected by precipitation which also has the potential to reduce quality.

(127) In addition to a general lack of wireless providers, a number of the CLECs with whom we spoke expressed skepticism that such an alternative would be viable in the foreseeable future. The provision of wireless services requires spectrum, which is a scarce resource. Many CLECs questioned whether wireless providers of access services could obtain such

---

[117] Discussions with **BEGIN PROPRIETARY END PROPRIETARY**

[118] Discussions with **BEGIN PROPRIETARY END PROPRIETARY**

[119] Discussions with **BEGIN PROPRIETARY END PROPRIETARY**

spectrum. Other felt the bankruptcy of the two leading providers of such services, Teligent and Winstar, indicated wireless provision is not yet a viable alternative.[120]

(128) With respect to cable, most of the CLECs noted there simply was not a cable alternative available to them to serve their enterprise customers that use products that rely on DS-1, DS-3, and dark fiber loops and/or transport.[121] Most cable providers are focused on providing residential service. With respect to the enterprise customers on which CLECs use DS-1, DS-3, and dark fiber loops and transport to provide service, there is rarely, if ever, an alternative cable provider.[122] Further, many CLECs noted that cable does not generally provide the level of bandwidth that services which utilize DS-1, DS-3, and dark fiber loops and or transport require, which also limits their value as substitutes.

(129) In terms of whether customers themselves could turn to cable, similar considerations apply. The absence of cable providers in business districts prevents the CLECs from using them as an alternative wholesaler, and prevents final customers from using them as well. Further, the bandwidth limitations of cable alternatives also limit the appeal and impact of this mode of delivery. It is also noteworthy that a number of the CLECs with whom we spoke indicated that to their knowledge, they had never lost a customer to cable.[123]

(130) It is also important to note that in our proposed impairment tests, the goal is to ensure that there be at least three competitors actually providing the service. If only the ILECs and the cable companies are able to service customers, this would not be enough providers to meet our (arguably lenient) standard for "sufficient" actual competition to demonstrate that economic and operational barriers have been overcome.

---

120 Discussions with **BEGIN PROPRIETARY END PROPRIETARY**

121 Discussions with **BEGIN PROPRIETARY END PROPRIETARY**

122 Data from the FCC also suggests that there is little deployment of cable for advanced services for business. Thus, again using Tables 2.1 through 2.4 of *Trends in Telephone Service*, May 2004, and eliminating residential and small business lines from these totals results in cable penetration of 0.8 percent of all high-speed lines with 200 kbps in at least one direction, and in both directions.

123 Discussions with **BEGIN PROPRIETARY END PROPRIETARY**

X. CONCLUSION

(131) The USTA II court's opinion has given the Commission the opportunity to refine and improve its impairment standard. It also returns to the Commission the principal responsibility of administering the impairment standard. In this report, we have provided, what we hope will be both a fresh and useful perspective on how the Commission can refine its impairment standard, and how the Commission may begin to implement an impairment test for DS-1, DS-3 and dark fiber loops and transport.

(132) The standard we propose retains the laudable traits of the TRO's standard, and is squarely consistent with both sound economic principles and the Telecommunications Act. Moreover, it directly resolves the issues raised by the USTA II court regarding the impairment standard. This report also describes and discusses an application of that standard that is designed to be both administratively feasible and squarely consistent with the standard.

Overview of Mayo/MiCRA/Bates White Economic Impairment Analysis

Presentation to Staff of the Wireline Bureau

October 4, 2004

Agenda

- Overview
- What's at Stake?
- The Proposed Impairment Standard
- Market Definition
- The Proposed Impairment Tests
- Intermodal competition and special access
- Summary and Conclusion

Overview

Overview

- This study is in response to the FCC's NPRM necessitated by the USTA II decision
- We represent a coalition of 25 CLECs
- When Telecom Act first passed, it appeared to be the beginning of a 'new age' for competition in local access
  - 'Prime Directive' of Act was to enable competition
  - Fundamental shift in role of regulation
- Eight years later it appears that we are at a critical juncture in enabling competition
- Responding to USTA II decision does not require 'going back to the drawing board'
  - Relatively small refinements can address the court's criticisms

Vitality and Vulnerability of the CLECs

Vitality of the CLECs is palpable

- We took advantage of this unique coalition to gain a ‘granular’ perspective on the competitive impact of CLECs that rely on UNEs to provide retail telecommunications services
- We found that CLECs are bringing numerous benefits to the local exchange market
  - New and innovative services
  - First to deploy services in particular geographic regions and/or customer tiers
  - Reducing prices and increasing customer choices
  - Forcing incumbent Bells to innovate and increase investment
- However, vitality of CLECs cannot be guaranteed without UNEs

Vulnerability of CLECs is also apparent

- While CLECs are bringing numerous consumer benefits to the local exchange market, they are also highly vulnerable
  - High number of bankruptcies in recent years
  - High number of exits from the industry
  - Poor stock market valuations
  - Poor ratings on debt
- Many of the CLECs that are parties to this coalition are 'turning the corner'
  - However, still have poor access to capital markets
  - Improvements in financial condition very recent, largely reliant on access to UNEs, and hindered by regulatory uncertainty

The Impairment Standard

The impairment issue: the context

- Overarching goal of Telecommunications Act is enabling competition
- Supreme Court strongly reaffirmed this in *Verizon* (2002) case
- Current impairment standard focuses on barriers to entry
- USTA II Court criticized current impairment standard as being too vague
- The court's criticisms can be addressed by relatively small refinements of the impairment standard.

Our proposed standard draws upon language, methods and tools of competition policy (antitrust)

The Proposed Standard:

Requesting carriers are impaired in their ability to provide the services they seek to offer if the consequence or failure to provide the requested network element poses a barrier or barriers to entry, including operational and economic barriers, and where the effect may be substantially to lessen competition, or tend to create a monopoly in the provision of the retail services that utilize the requested element.

This standard is attractive for several reasons

- Retains Commission's focus on economic and operational barriers to entry that the USTA II court found to be an improvement over previous attempts to establish impairment standard
- Responds directly to the USTA II court's criticism of the TRO standard as being too 'open-ended'
- Consistent with purpose of Telecommunications Act
- Provides a sound platform for establishing specific impairment tests

Market Definition

Inferring impairment requires a sensible market definition

- Application of antitrust principles indicates the Commission correctly identified the geographic market as route-by-route
- This definition minimizes error costs
- Error costs of defining broad geographic markets when narrower geographic markets are correct are high
  - Will result in conclusion of non-impairment where impairment exists in direct contradiction to Telecommunications Act
- If, in fact, geographic markets are broader than route-by-route (which appears highly unlikely), this can be addressed through our proposed impairment tests

The Impairment Test

The impairment test: overview

- Key findings of the TRO remain valid
- Nationwide impairment exists for DS-1, DS-3, dark fiber loops and transport
- Commission must establish a process for identifying exceptions to nationwide findings

The impairment test: loops

- The TRO found impairment at all loop capacity levels except OCn and above
- The empirical evidence strongly indicates this finding is sound
  - Miniscule deployment of loops by CLECs
    - Even this evidence overstates magnitude of loop deployment since most deployment is "fiber to the floor" rather than access to an entire building
  - High sunk costs and scale economies relative to the revenue opportunities
- While the TRO concluded there was impairment at all loop-capacity levels except OCn and above, exceptions were made for cases where there were two facilities-based providers offering retail or wholesale loop services of the relevant capacity at their own facilities

Proposed standards for non-impairment for loops

- OCn: no impairment
- DS_3 and DS_1: non-impairment if there are two or more CLECs that provide service to customers in the same building at <u>the same capacity level</u>
- Dark Fiber: non-impairment if two or more CLECs have constructed fiber to the building

Current standard for transport and ILEC interpretation

- Current standard depends on number of wholesalers or number of CLECs self-provisioning
- ILECs claimed in state proceedings that these triggers were met wherever two CLECs with fiber collocations were present on both ends of a route
  - This assumes CLECs are actively or are instantly capable of provision of transport between these two offices
  - This assumes so long as the CLEC was providing transport, it was willing and able to provide wholesale transport at any capacity level
- These assumptions are not correct
  - Must be aware of costs of provisioning transport between two central offices (COs)
  - Must be cognizant of difficulties of provisioning at different levels of capacity

Transport cost structure and economics

- Collocated CLEC has to add cross-connection capacity in order to wholesale
- Have to connect this capacity to the buying CLEC
  - Connect to CLEC at its own collocation at another ILEC CO
  - Connect directly to CLEC's POP from its own POP
  - Both scenarios involve substantial scale economies and sunk costs

Existence of collocations at two ends of a transport route does not guarantee efficient provision of wholesale service

Network Diagram for Dedicated Transport

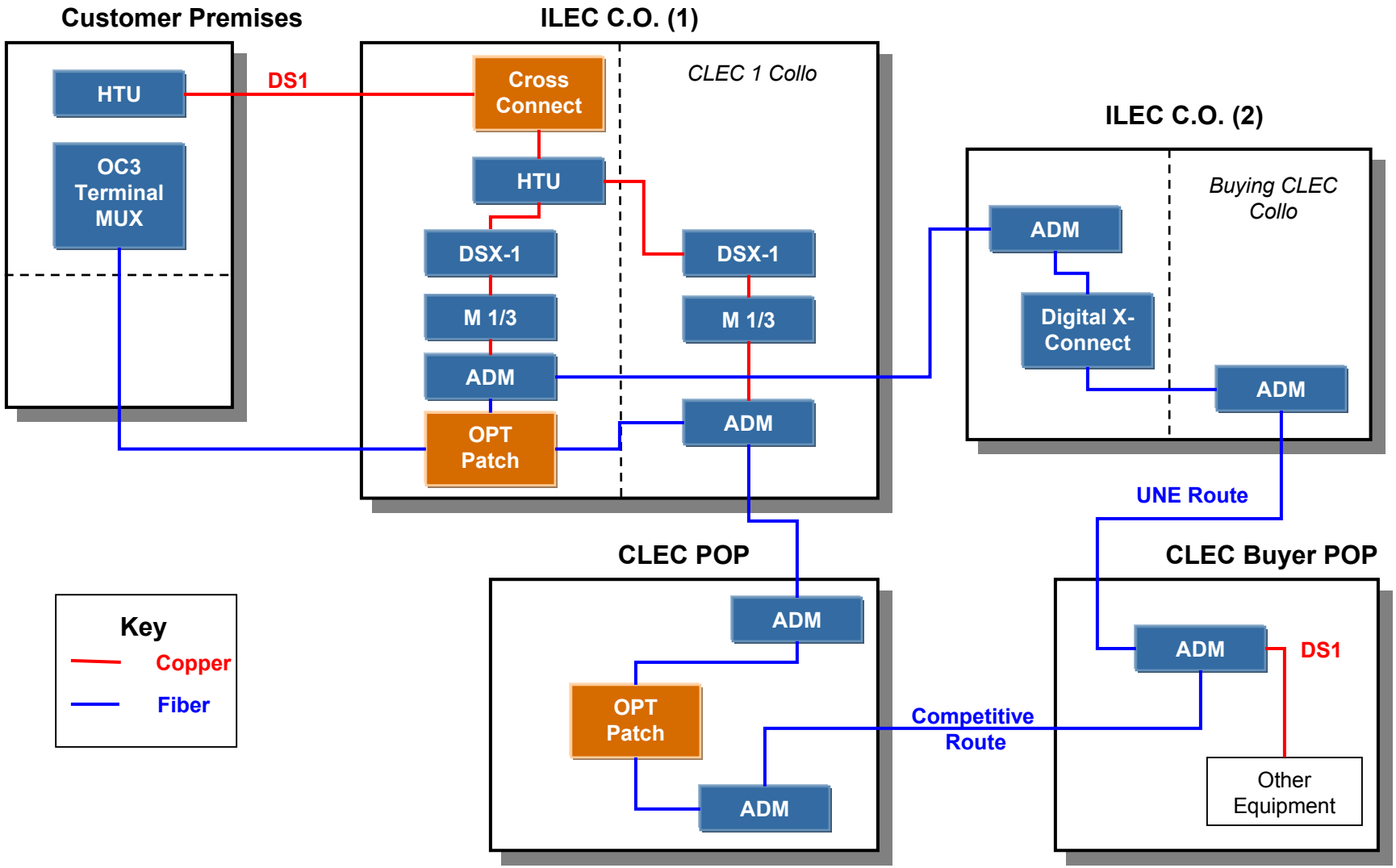

Possible impairment tests for dark fiber and DS-3 transport

- Identify routes with multiple wholesale providers or self providers
- Use surrogates for size of market relative to minimum viable scale
- Collect information on paired fiber based collocators as a measure of <u>possible</u> competition

Impairment exists nationwide for DS-1 transport

- Very little wholesaling or self-provisioning of DS-1 transport consistent with the findings of the TRO
- Substantial cross-connect costs at the ILEC collocation
- Substantial “final link” costs
- The mere presence of collocations is not probative for DS-1
  - Relative to higher capacity levels of transport the costs of deployment are higher and revenue opportunities are much lower

A proposed impairment test for DS-1

- Non-impairment exists if two CLECs certify they are actually providing wholesale transport on a route
  - Self-certification reasonable since CLECs have an incentive to indicate they are providing wholesale transport on a route
    - These CLECs would prefer to have the UNE delisted since it will stimulate their own business
- Alternative surrogates may need to be studied by Commission

Special Access is Not a Substitute for UNEs

Special access is not a substitute for UNEs

- USTA II court indicated a consideration of special access "relevant"
  - Court pointed to evidence from wireless marketplace
- CLECs much more reliant on UNEs than wireless carriers
  - Special access costs limited portion of wireless' providers costs
- Substituting special access for UNEs would have dramatic impact on some CLECs' business models
- Special access rates are not cost based; which invites ILECs to engage in price squeezes

Intermodal Alternatives

Intermodal alternatives are not sufficient

- Widespread alternatives are simply not available at the wholesale or retail level
- Immaturity of technologies and sunk costs of switching pose barriers to near term penetration
- Current performance levels of these technologies does not provide a sufficient check on competition

Summary and Conclusion

Summary and Conclusions

- CLECs have brought numerous benefits to the marketplace
- CLECs require access to UNEs for loops and transport to continue bringing these benefits to the marketplace
- The key conclusions in the TRO with respect to market definition and impairment are sound
- Relatively minor adjustments to the impairment standard can address the court's concerns
- Relatively minor adjustment to the impairment tests can address the court's concerns

Overview of Mayo-Pelcovits-Frentrup-Sacher Affidavit on CLEC Impairment

Presentation to Staff of the Wireline Bureau

October 4, 2004