James K. Smith
Executive Director-
Federal Regulatory

SBC Telecommunications, Inc.
1401 I Street, NW
Suite 1100
Washington, D.C. 20005

202-326-8883. Phone
202-408-4801. Facsimile

October 8, 2004

VIA ELECTRONIC SUBMISSION

Ms. Marlene H. Dortch
Secretary
Office of the Secretary
Federal Communications Commission
445 12th Street, SW
Washington, DC 20554

Re: ***Notice of Ex Parte***
WC Docket Nos. 04-29, 04-36 and 03-211

Dear Ms. Dortch:

On October 7, 2004, James C. Smith, Jack Zinman and I, the undersigned on behalf of SBC Telecommunications, Inc. (SBC) met with Matt Brill to discuss SBC's position regarding IP-enabled services as set forth in the attachment hereto.

Pursuant to Section 1.1206(b) of the Commission's rules, this letter is being electronically filed. I ask that this letter be recognized with the proceedings identified above.

Please contact the undersigned at (202) 326-8883 should you have any questions.

Sincerely,

/s/ James K. Smith

Attachment

cc (via electronic mail):
Matthew Brill

SBC

IP-Enabled Services
WC Docket Nos. 04-29; 04-36; 03-211
October 7, 2004

Threshold Issues

- Scope of IP-Enabled Services
  - IP services and the IP facilities over which they are provided
- Jurisdictional Scheme
  - Federal authority over IP space
  - Governing principles
- Nature of IP regulation
  - Avoid legacy regulatory structures
- Jurisdictional Support

Scope: All IP Services and Facilities

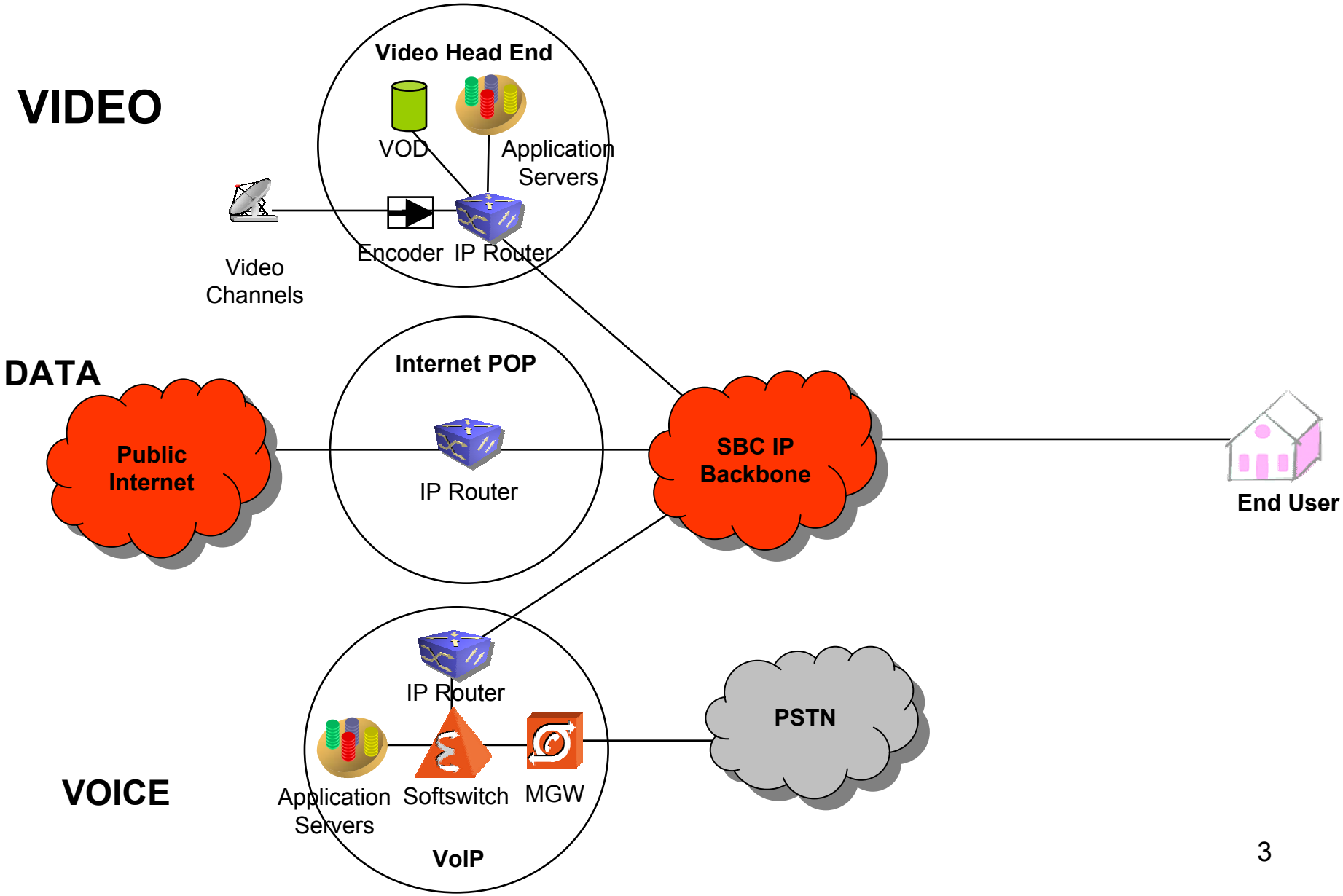

SBC's Plan For Extending IP Network

- IP-based network investment of $4-6 billion over five years to deliver 15-25 Mbps to each customer
  - FTTN: existing neighborhoods to within 3,000-5,000 feet of customer
    - Takes advantage of advances in DSL technology and video compression
    - Facilitates more rapid deployment
  - FTTP: new construction and MDUs

IP Platform Remains Distinct

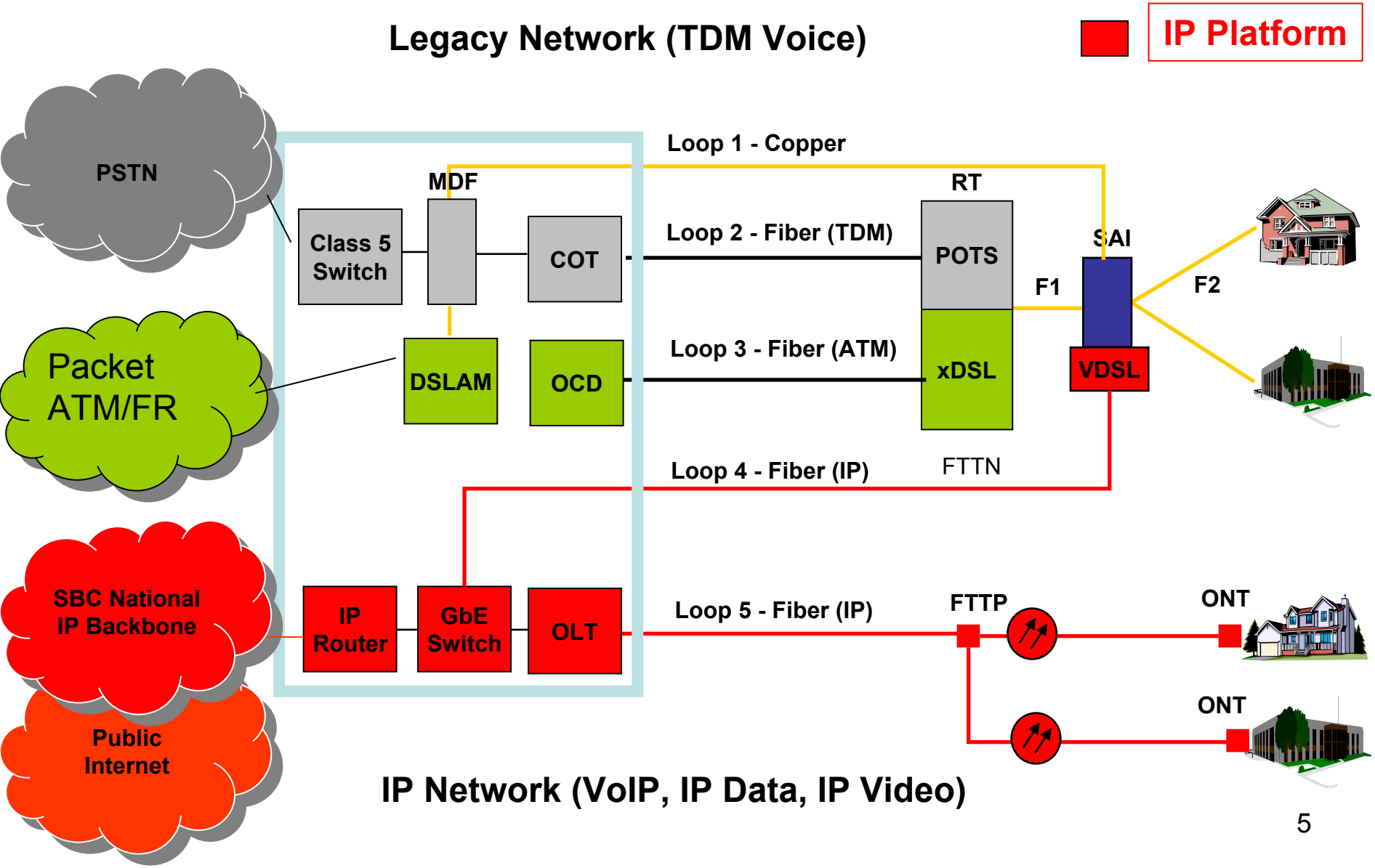

FTTN/FTTP IP Investment Will Create New Opportunities for Competition in the Video Market

- FTTN and FTTP are switched IP-based fiber architectures that will empower a paradigm shift in the competitive opportunities created in the video market with the potential for myriad new and innovative IP video offerings.

- Different and more dynamic customer video experience
  - Virtually no limit on content or consumer choice
  - Greater interactivity
  - Integration of non video IP capabilities
  - Customer control

.

IP Switched Video Changes The Game

- Broadcast RF Video
  - All endpoints (Set Top Boxes) receive the full channel lineup at all times. The STB only displays (tunes) a single channel at a time. Channel changes are done within the STB to tune to different frequency in the lineup already being received.

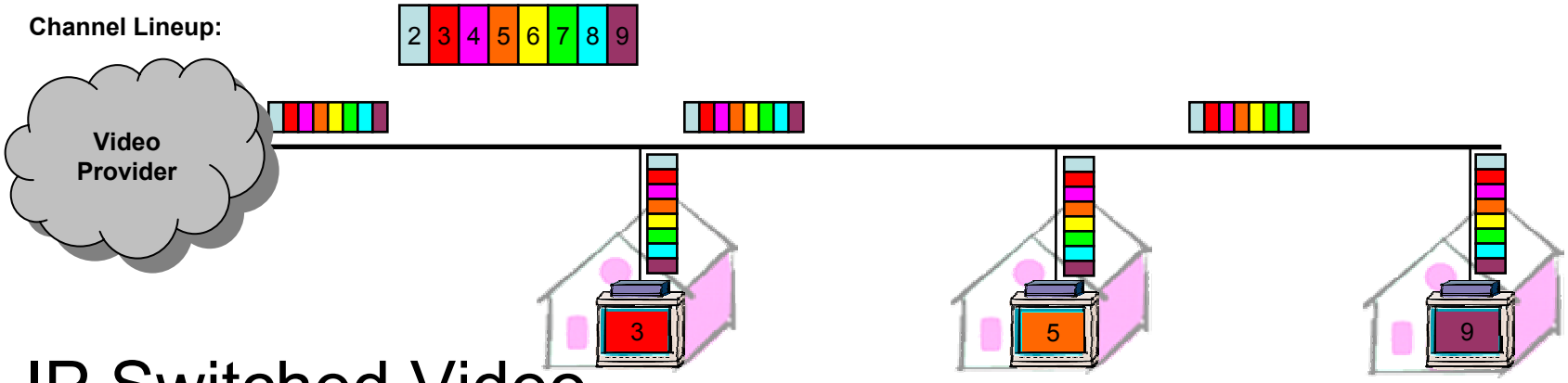

- IP Switched Video
  - A STB only receives a single video channel at a time and displays that on the TV. The data stream for this single video channel is requested by the STB to the network. Channel changes are performed by the network at the request of the STB.

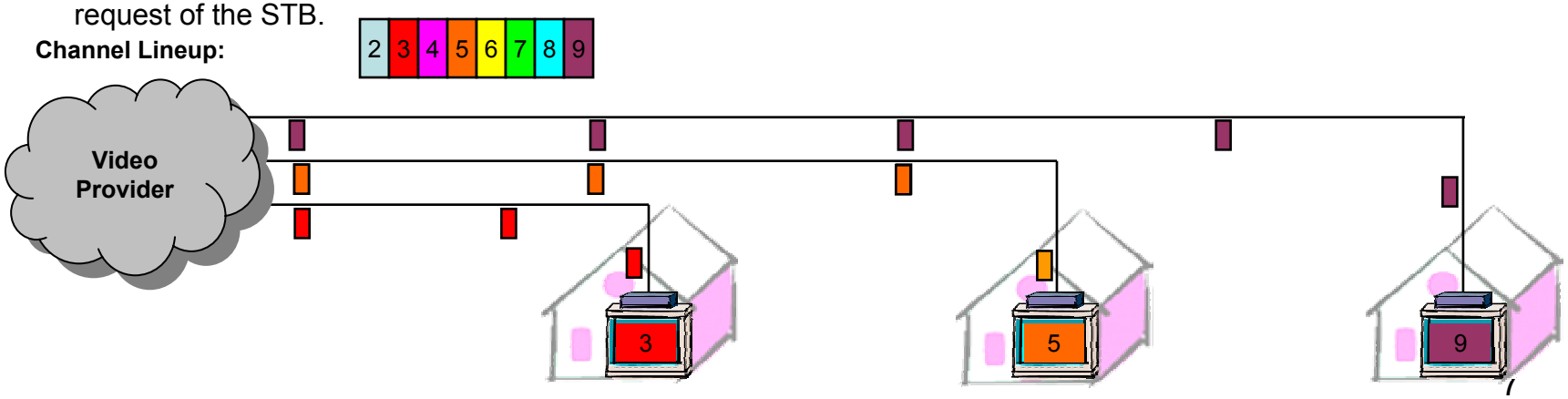

IP Switched Video

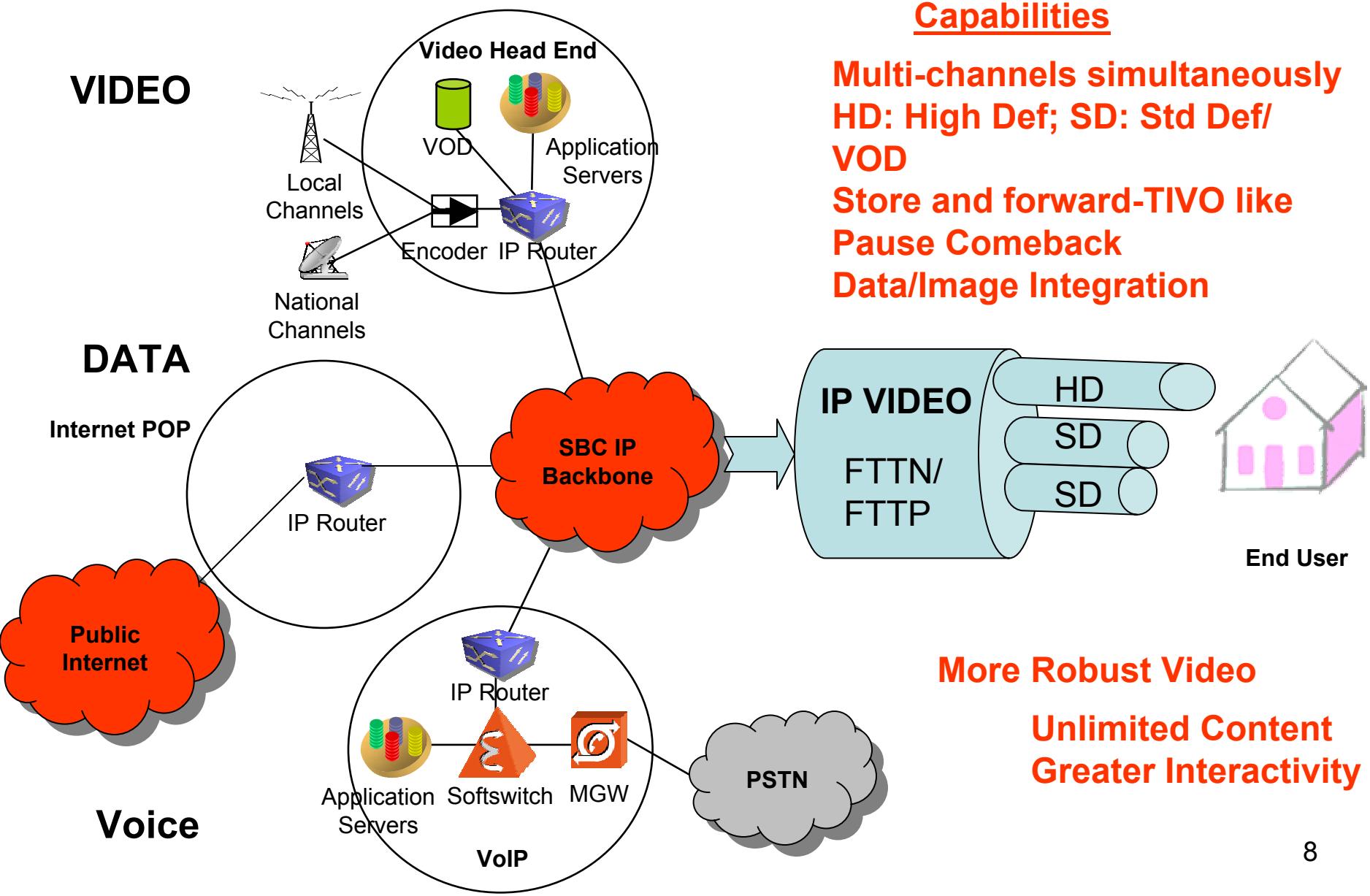

Capabilities

Multi-channels simultaneously
HD: High Def; SD: Std Def/ VOD
Store and forward-TIVO like
Pause Comeback
Data/Image Integration

More Robust Video

Unlimited Content
Greater Interactivity

Business Challenges as Video Entrant

- Time to market is a fundamental driver for SBC
- No guarantee that new video market opportunities will materialize
- Ability to design IP-video products and service packages that attract customers is critical
  - Significant market/service/pricing challenges to address cable's entrenched market position
  - Need to Integrate wide range of IP voice and data applications
- Ability to rely on a regulatory environment that doesn't
  - Undermine economics of investment
  - Adversely affect operational/service costs

Scope of IP Regulatory Framework Must Encompass All IP Components

IP Enabled Services:

- voice, video, data
- Combinations/ permutations
- Customization

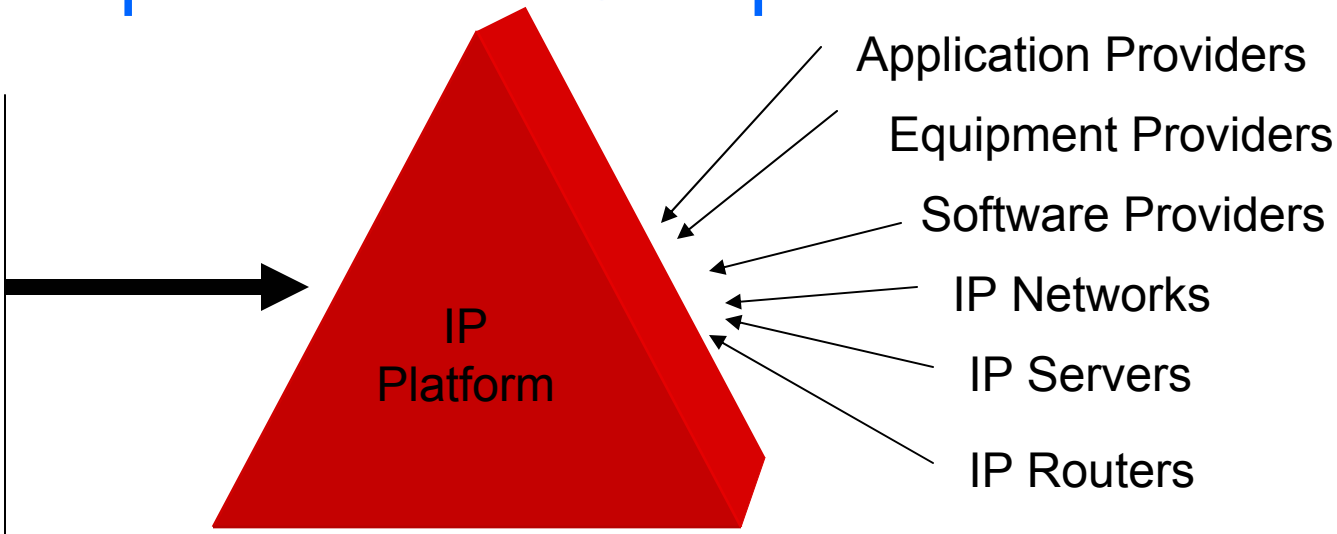

Legacy Networks and Services

Circuit Switched, ATM, FR, DSL, Private lines, UNEs,

A Clear Bifurcation Between Legacy Common Carrier and IP Regulation is Fundamental

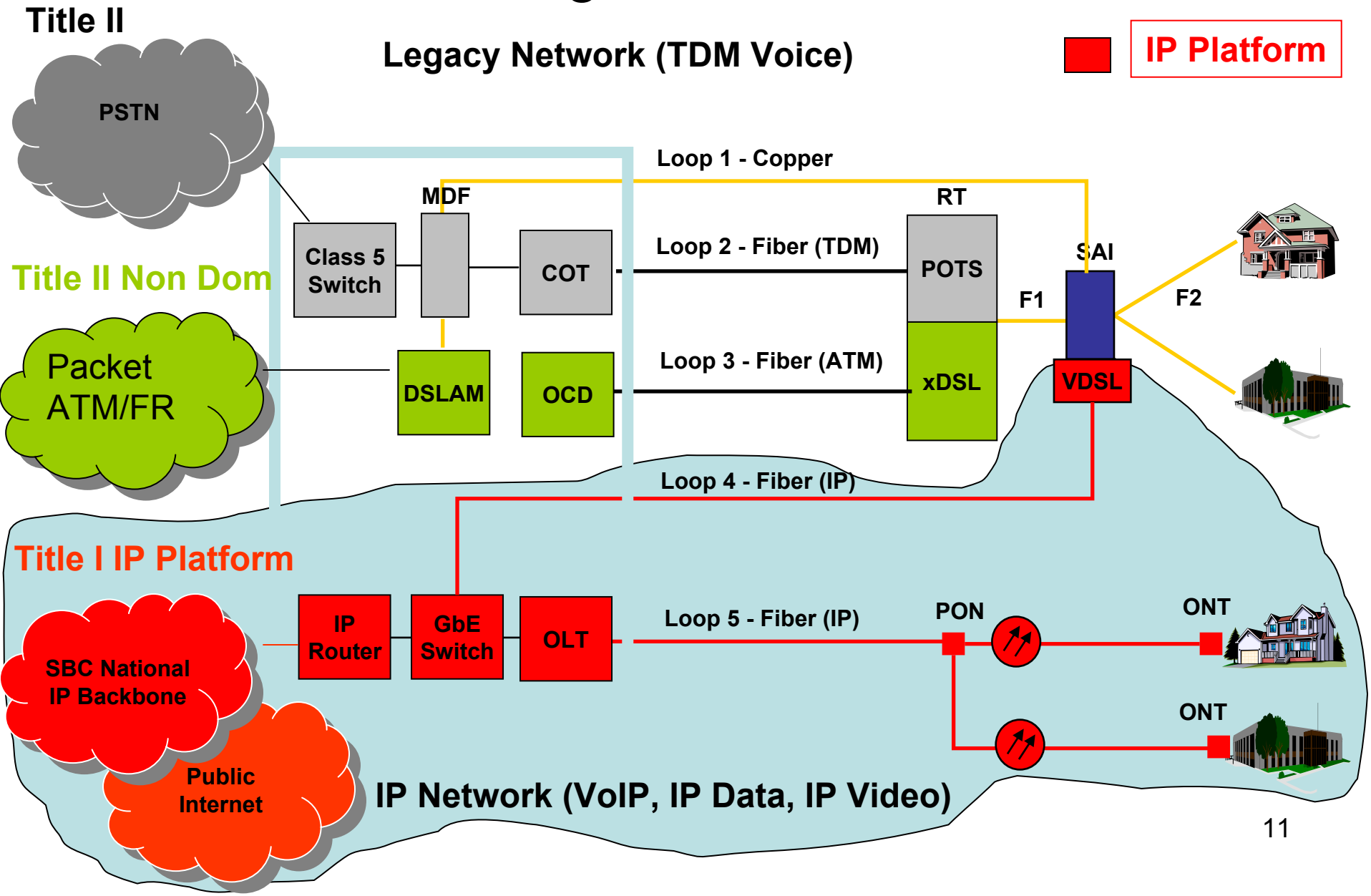

Public Interest Benefits of A Bright Line

- Regulation of circuit switched and traditional packet networks can proceed independent of the regulatory scheme for IP services and facilities.
- Allows for a competitively neutral regulatory framework for all IP providers regardless of provider's historical status.
- Fosters formulation of IP regulatory policy that is tailored to a highly competitive, fast evolving, innovative IP environment - - unencumbered by historical regulation.
- Provides a stable regulatory bifurcation that is sustainable over the long run

A Positive Regulatory Environment Will Rapidly Accelerate Investment in IP Based Facilities and Services

- Holistic approach to the exercise of federal Jurisdiction is required
  - Scope must include all services that reach or leave end user's premises in IP format as well as the IP facilities over which they are provided..

- IP begs for Title I regulatory scheme
  - Inherent information service characteristics and video content capabilities.
  - Most conducive to minimal regulation of Internet evolution
  - Precludes extension of legacy common carrier regulation that will impede IP-based broadband investment, competition, and innovation

- Establishing Title I operating principles provides a framework for investment
  - No presumptive regulation or automatic extension of legacy regulation to IP facilities and services
  - Affirmative FCC action required before imposition of any IP regulation
  - If IP telecommunications service exists - - Title II forbearance absent service specific determinations to the contrary
  - Regulatory neutrality across IP platform providers

MCI's Use of Layers Model Should Not Govern IP Regulatory Framework

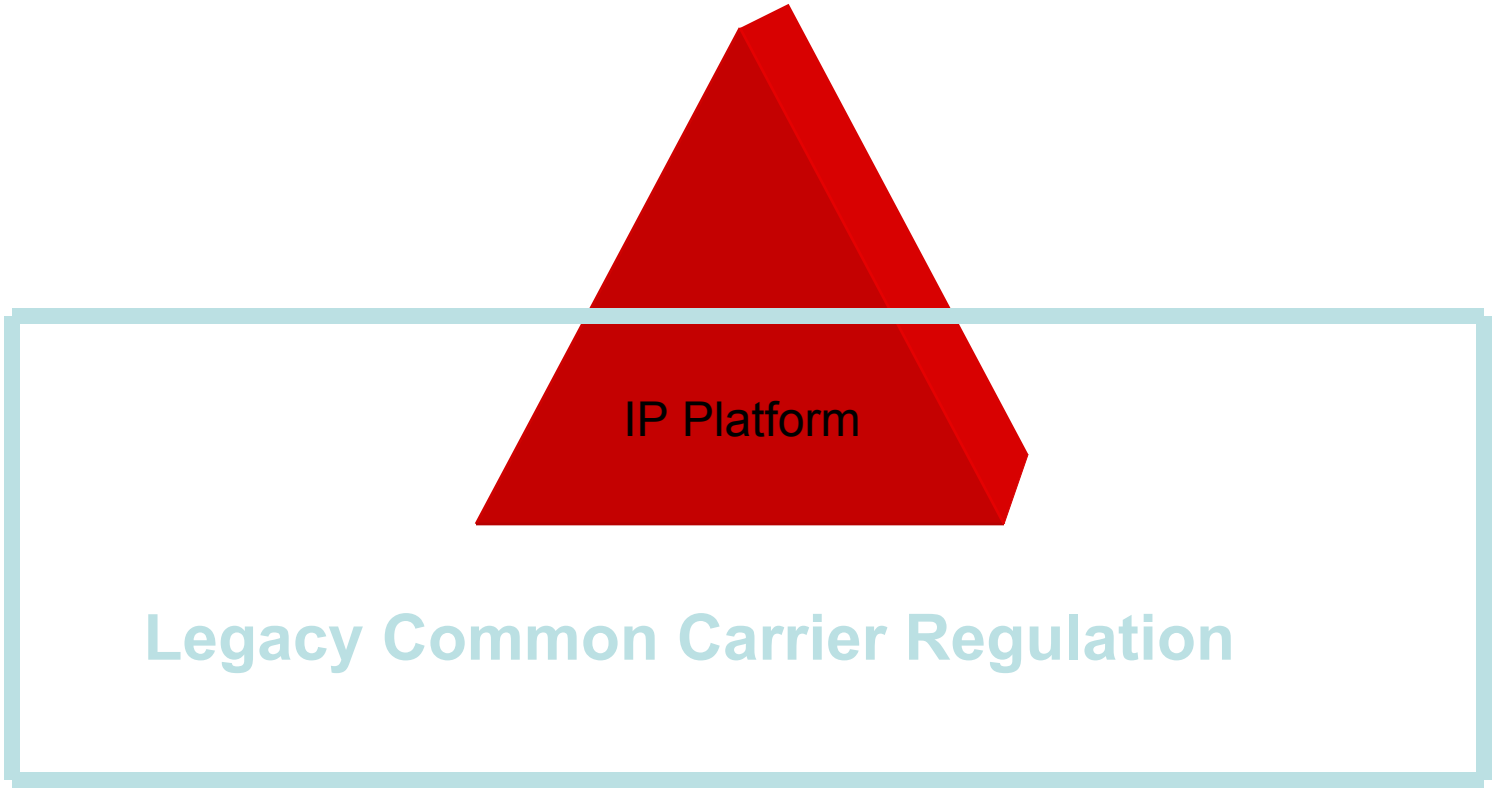

- OSI Layer Model serves a valid purpose for delineating engineering aspects of the network
- OSI Model is not an appropriate tool for applying/extending common carrier regulation to physical IP network components

Cable Has IP Platform

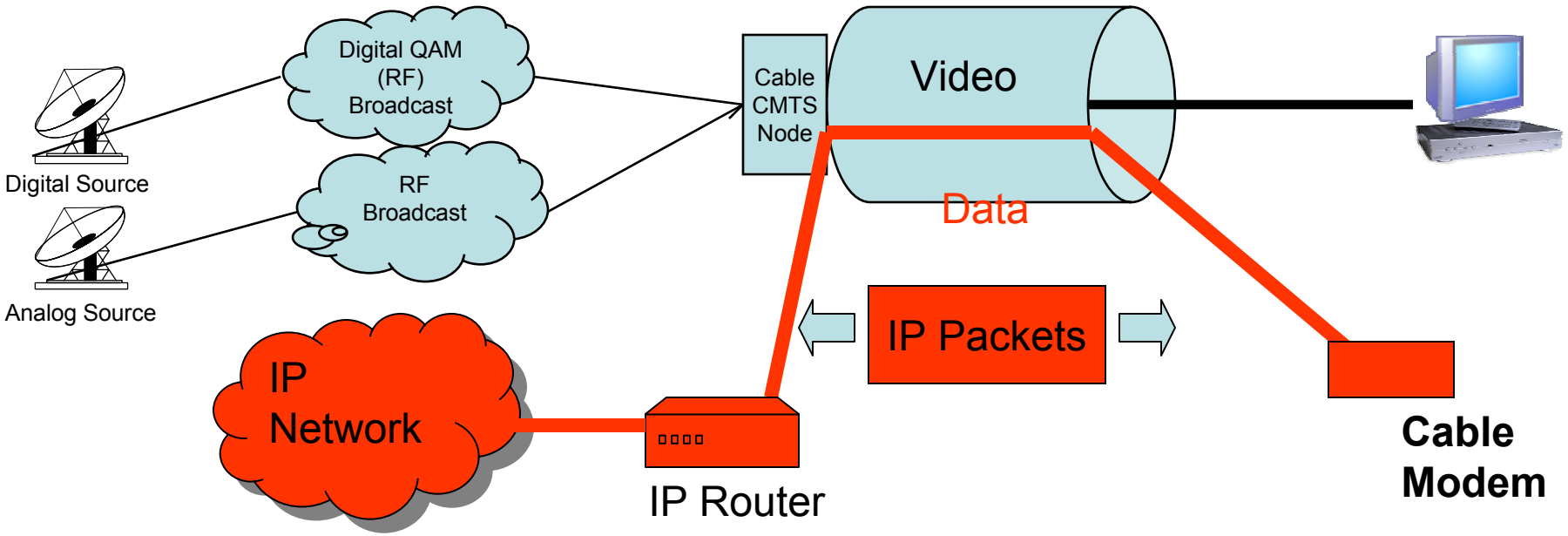

SBC IP Platform

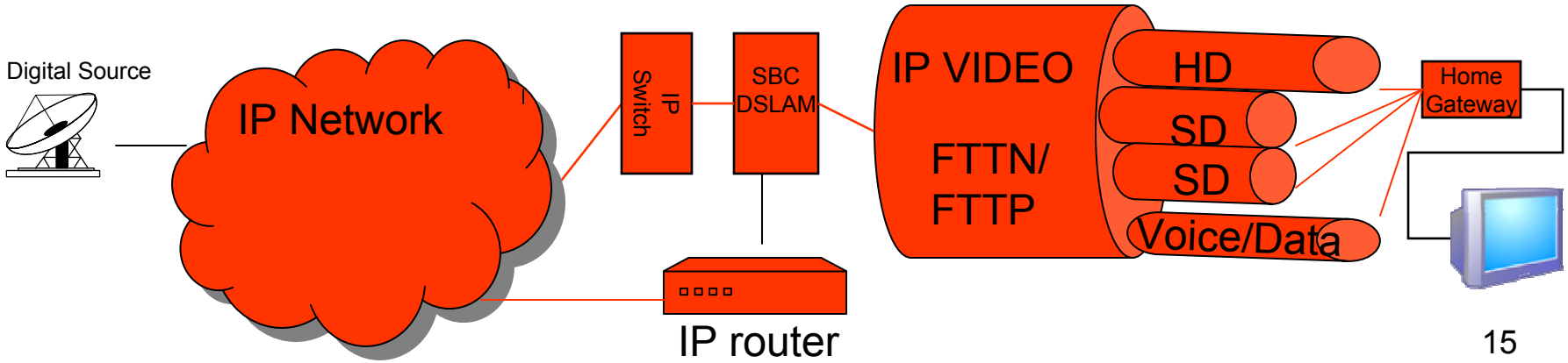

Use of the Layers Model To Apply Common Carrier Regulation to IP Is Inappropriate

- Would extend legacy regulation to IP facilities that haven't even been built
- Isn't even applied for regulatory purposes in a manner that comports with economics of investment or competitive marketplace realities
  - Inconsistent application across all competing IP Platform providers
  - Arbitrarily singles our ILEC IP investment, while explicitly ignoring cable company IP investment. (See *A Horizontal Leap Forward,* Richard S. Whitt December 200)
- Economics of IP investment will be undermined if legacy unbundling requirements are extended to IP investment and services.

Applying *Computer Inquiry* To IP Will Stifle Technology and Innovation

- *Computer Inquiry* is a rigid common carrier structure premised on:
  - Isolating a "telecommunications service" in every information service – would subject IP facilities to Title II regulation
  - Establishing a CEI interface between the two services

- Forced separation of IP telecommunications capabilities from IP information processing capabilities would:
  - Impede cost benefits of IP technology integration in design and evolution of broadband <u>networks</u> - - inhibit investment
  - Restrict IP technology integration in developing Internet-based IP <u>services</u>
    - add cost and undermine service economics
  - Inhibit introduction of new and innovative Internet-based services
    - impede the design/packaging/ bundling of IP services necessary to meet demands of the IP marketplace

IP-Enabled Services are Jurisdictionally Mixed and Predominantly Interstate

- Offer capability for both interstate and intrastate communications with:
  - Individuals
  - Groups
  - Information Sources

- Dual interstate / intrastate capability may be utilized during a single communication

IP-Enabled Services Cannot Be Segregated into Interstate and Intrastate Components and Subjected to Separate State and Federal Regulatory Regimes

- Infeasible to locate geographic end point on the IP side of an IP-PSTN communication
  - IP communications are routed to devices, not geographic locations
- Infeasible to track multiple, jurisdictionally-variable communications during a single session
- IP-enabled services are portable, further complicating any attempt to determine geographic end points

IP-Enabled Services Are Information Services

- IP-enabled services: Services that enable a customer to send or receive communications in IP format (*i.e.*, the communication between the end user and the service provider is in IP format).

- IP-enabled services offer the inherent "capability for generating, acquiring, storing, transforming, processing, retrieving, utilizing or making available information via telecommunications."

- This virtually limitless capability includes:
  - Interaction with stored data to customize services (e.g., advanced call forwarding, unified messaging)
  - Retrieval of information from databases (e.g., contact lists, calendars, click-to-call)
  - Transformation of information from one format to another (e.g., talking e-mail)
  - Additional converged voice/data/video functionality continually being introduced into the market.

The FCC Should Preempt State Regulation of IP-Enabled Services

- FCC has authority to preempt state regulation of jurisdictionally mixed, inseparable services where such regulation negates federal policy.
- Federal policy of "unregulation" for information services is well established in FCC precedent and section 230 of the Act.
- Key Cases Addressing Standards for Preemption:
  - *Louisiana PSC v. FCC*, 476 U.S. 355, 373-76 (1986) (observing that preemption has been "upheld where it was not possible to separate the interstate and the intrastate components of the asserted FCC regulation.")

Continued

- *NARUC v. FCC*, 880 F.2d 422, 428-31 (1989) (preemption valid only when state regulation "negates the exercise by the FCC of its own lawful authority over interstate communication.")
- *Illinois Bell v. FCC*, 883 F.2d 104, 112-16 (1989) (where separate regulation is not possible, "the Act sanctions federal regulation of the entire subject matter (which may include preemption of inconsistent state regulation) if necessary to fulfill a valid federal regulatory objective.")
- *California v. FCC*, 905 F.2d 1217, 1239-45 (1990) (recognizing *Louisiana PSC* "impossibility exception;" stating that the FCC must show state regulation negates FCC's authority over interstate enhanced services)
- *Maryland PSC v. FCC*, 909 F.2d 1510, 1515 (1990) (FCC preemption of state regulation is permissible when: (1) the matter to be regulated has interstate and intrastate aspects; (2) preemption is necessary to protect a valid federal regulatory objective; and (3) state regulation would negate FCC authority because regulation of the interstate aspects cannot be separated from regulation of the intrastate aspects)
- *California v. FCC*, 39 F.3d 919, 931-33 (1994) (Preemption permissible where FCC shows state regulation would negate valid FCC regulatory goals)