Before the
FEDERAL COMMUNICATIONS COMMISSION
Washington, DC 20554

In the Matter of	)	
	)	
July 1, 2004	)	WC Docket No. 04-372
Annual Access Charge Tariff Filings	)	
	)	

DIRECT CASE OF THE NATIONAL EXCHANGE CARRIER ASSOCIATION, INC.

80 South Jefferson Rd.
Whippany, NJ 07981
(973) 884-8000

October 12, 2004

Table of Contents

I. Introduction…….1

II. Responses to Data Requests…….……..3

a. Issue 1: Whether the revised rates in NECA's annual access tariff are unjust or unreasonable……...3

Prior Period Earnings Data……..8

Intrastate Earnings Monitoring Data.……...9

Annual Earnings Monitoring Data.……..9

Final Earnings Results.……..10

Explanation of Differences between September 492s and Final Results..……..10

Most Recent Adjustments for 2003……...14

Analysis of True-Up Patterns and Correlation to 2003 Projection……14

Methods of Preparing Initial Submissions…….15

Identification of Largest Adjustments……...16

Companies with the Largest Number and Largest Aggregate Number of Adjustments.……..18

Carrier Options for Reporting Adjustments.……..19

Comparison of Data Submission Times for Cost Studies and ICLS True-Ups……22

b. Issue 2: Whether NECA's entrance facility charges include inappropriate demand projections and are unjust and unreasonable.…….22

Application of Access Charges to Customers who have Interconnection Arrangements..…….24

Details of ACS Service Arrangements.…….26

c. Issue 3: Whether the language in section 6.1.3 of NECA Tariff FCC No. 5 relating to entrance facility charges is unjust or unreasonable.....…….28

III. Conclusion……29

EXHIBITS:

Exhibit 1: NECA 492 Reports 1993 – 2002

Exhibit 2: Final & Initial View of Revenues and Expenses 1993 – 2003 Where Initial View is of August of the Last Year of the View

Exhibit 3A: Companies Accounting for 80% of the True-up

Exhibit 3B: Explanations of Year 2002 Adjustments for Top Study Areas

Exhibit 3C: Average Schedule Top Adjustment Companies by Settlement Difference Between Initial and Final Views

Exhibit 4A: Frequency of Adjustments for Companies Accounting for 80% of Total; Adjustments

Exhibit 4B: List of Top 2 Aggregate Adjustment and Top 2 Total Number of Adjustment Companies

Exhibit 4C: Carrier-Specific Earnings Data for Top 2 Aggregate Adjustment and Total Number of Adjustment Companies for 1999/2000 AND 2001/2002

Exhibit 5A: Effective Interconnection Agreement Between General Communication Corp. d/b/a General Communication Inc. and ACS of Fairbanks, Inc. Covering the Globe Office

Exhibit 5B: Effective Interconnection Agreement Between General Communication Corp. d/b/a/ General Communication Inc. and ACS of Alaska, Inc. Covering the Juneau-Main and Sterling Offices

Exhibit 6: Facility Diagrams for the Globe, Juneau-Main and Sterling Offices

Before the
Federal Communications Commission
Washington, DC 20554

In the Matter of	)	
	)	WC Docket no. 04-372
July 1, 2004	)	
Annual Access Charge Tariff Filings	)	

DIRECT CASE

The National Exchange Carrier Association, Inc. (NECA) presents its Direct Case in the above-captioned matter.

I. Introduction

The Commission's September 20, 2004 *Designation Order*[1] directs NECA to provide extensive data on prior period interstate and intrastate earnings levels. At the threshold, NECA observes that this information relates to prior tariff rates, not the rates proposed in NECA's annual access filing and is therefore not relevant to NECA's filing.[2] Similarly, the information requested in connection with the second and third issues specified in the *Designation Order* (regarding the lawfulness of tariff terms and conditions governing application of entrance facility charges) has no bearing on NECA's annual access filing because those terms and conditions have been in effect for years, and NECA did not propose any changes to them in its filing.

Because the information requested in the *Designation Order* is largely irrelevant to NECA Transmittal No. 1030, NECA respectfully requests that this proceeding be

[1] July 1, 2004 Annual Access Charge Tariff Filings, WC Docket No. 04-372, *Order Designating Issues for Investigation*, DA 04-3020 (rel. Sept. 20, 2004) (*Designation Order*).

[2] July 1, 2004 Annual Access Charge Tariff Filings, WCB/Pricing 04-19, Transmittal No. 1030, NECA *Reply* (June 29, 2004) at 2 (*Reply*). *See* 47 U.S.C. § 204(a)(1) (authorizing Commission to suspend and investigate "any *new or revised* charge, classification, regulation or practice. . . .") (emphasis added).

terminated, that the Commission cancel the accounting requirements imposed by its July 1, 2004 *Suspension Order*,[3] and that it refrain from taking any further action with respect to the rates proposed in Transmittal No. 1030, which were permitted to become effective by that Order and which remain in effect today.

Notwithstanding the above, NECA provides herein the information requested by the Commission's *Designation Order* to the extent that such information is available to it.[4] The *Designation Order* requests a massive amount of data. NECA has used its best efforts to comply with the *Designation Order's* requirements considering the short time allowed for response. Further, the *Designation Order* in several instances requests data that are not available to NECA. For example, the *Designation Order* requests extensive interstate and intrastate earnings data for monitoring periods dating back to 1993. While NECA maintains within its pool settlements system the information necessary to calculate interstate earnings levels for all requested periods, NECA does not maintain account-level detail corresponding to monthly settlement data nor does NECA maintain intrastate earnings monitoring data, and therefore cannot respond to portions of the *Designation Order* requesting such information.[5]

---

[3] July 1, 2004 Annual Access Charge Tariff Filings, WCB/Pricing File No. 04-18, *Order*, 19 FCC Rcd 12211 (2004) (*Suspension Order*).

[4] NECA's provision of data on prior period interstate earnings, and information regarding the reasonableness of previously-filed tariff terms and conditions, is without prejudice to its position that such data and information are outside the scope of this section 204(a) tariff investigation and as such cannot establish a basis for adverse Commission action with respect to NECA's currently-effective rates. In this regard, NECA incorporates by reference the arguments made in its *Reply* submitted in this proceeding on June 29, 2004 in response to petitions submitted by AT&T and GCI to suspend and investigate Transmittal No. 1030.

[5] The Commission's access charge rules, under which NECA operates, are limited by their terms to *interstate* access services. *See* 47 C.F.R. § 69.1.

Finally, the *Designation Order* directs NECA to provide explanations for individual adjustments submitted by companies over the course of the past 10 years. NECA's settlement system includes a data field that allows companies and NECA staff to enter brief explanatory comments regarding true-ups. This information is only available on-line for adjustments submitted within the last 24 months.[6]

II. Responses to Data Requests

a. Issue 1: Whether the revised rates in NECA's annual access tariff are unjust or unreasonable.

The first issue designated for investigation is whether the revised rates in NECA's annual access tariff are unjust and unreasonable in violation of section 201 of the Act. According to the Commission's *Designation Order*, "significant questions" were raised by petitions seeking suspension and investigation of NECA's tariff as to whether NECA's rate development methodology has resulted in consistent overearnings over the past ten years. In the Commission's view, this may indicate that NECA's rate development methodology produces access rates that are unjust or unreasonable.[7]

In its *Reply* to petitions against its tariff, NECA pointed out that references to prior earnings have no bearing on whether the rates proposed in the instant tariff transmittal are unreasonable.[8] NECA also explained that:

- Its proposed rates were in fact calculated to earn at authorized levels.
- No party had suggested any flaws in the demand and cost projections underlying NECA's proposed rates.[9]

---

[6] As discussed below, the company-specific information requested by the *Designation Order* is considered proprietary and confidential by the companies involved and NECA has accordingly filed this information under protective seal.

[7] *Designation Order* at ¶ 5.

[8] NECA *Reply* at 2.

- Transmittal No 1030 incorporated a 7.1 percent reduction in traffic sensitive switched access rates, and that this reduction came only a year after NECA proposed an even larger 7.9% reduction in traffic sensitive switched access rates.
- Forecasting cost and demand levels is becoming increasingly complicated due to technological, marketplace and regulatory uncertainties.[10]

The Commission's *Designation Order* does not discuss or evaluate any of these points but instead focuses almost exclusively on questions relating to prior-period earnings.[11]

NECA's *Reply* explained that initial reports of pool earnings are not necessarily representative of final earnings levels because not all NECA carriers complete cost studies by the time final Form 492 reports are due.[12] Generally speaking, as cost studies and data true-ups are submitted, NECA pool earnings tend to "erode" below initially-reported levels. In support of this point, NECA provided data in its *Reply* showing that prior special access earnings, on average, tended to finalize at well-below authorized return levels even though initial reports showed above-authorized returns.[13] This information demonstrated that concerns about NECA prior period overearnings in the special access category did not warrant suspension and investigation of the special access rate increases proposed in NECA's annual filing.

---

[9] As explained in NECA's *Reply*, allegations by GCI that NECA included "inappropriate" data in its special access entrance facility demand forecasts were merely an attempt to bootstrap issues about tariff terms and conditions into an investigation of NECA's annual filing, which did not propose to change those terms and conditions. GCI's allegations, which NECA shows herein to be baseless, are therefore outside the scope of a section 204 investigation of NECA's tariff filing.

[10] *Reply* at 5.

[11] *See, e.g.*, *Designation Order* at ¶ 11.

[12] To allow carriers time to prepare and submit cost studies, NECA permits carriers up to 24 months after an initial data month to "true up" data submitted to NECA. *Reply* at 3-4.

[13] *Reply* at 4.

For example, in its June 29 *Reply*, NECA provided information indicating that as of May 2004, special access earnings had declined to 15.62% (compared to the 17% level based on data available as of February 2004 as shown in NECA's March 2004 Form 492 Report) and are expected to decline further as additional pooling true-ups are submitted.[14] Looking at pooling data for August, 2004 (the most recent month available for analysis), NECA pool 2003 special access earnings are down to 11.7% and, as indicated in NECA's *Reply*, are likely to fall substantially lower – well beneath authorized levels – by the time all pool data true-ups are reported.[15] This information makes clear that the concerns expressed by AT&T and GCI about NECA prior period overearnings in the special access category are unfounded.

It is also important to understand that prior-period earnings – regardless of levels – are simply not relevant to the rates proposed in NECA's annual filing. This is because NECA's proposed rates are always targeted to earn at the authorized 11.25% level during the tariff test period. NECA does not – indeed, cannot – target its rates at a higher level to offset expected losses during earlier portions of the monitoring period,[16] nor can the Commission require NECA, in the context of a 204(a) tariff proceeding, to target its rates at below-authorized levels to compensate for prior period overearnings.[17] Yet, the

---

[14] *Reply* at 3-4.

[15] As shown in the attachments to this filing, NECA currently projects 2003 special access earnings to finalize at 9.11 percent.

[16] *See, e.g., Arizona Grocery Co. v. Atchison, Topeka & Santa Fe Railway Co.*, 284 U.S. 370 (1932); *Annual 1988 Access Tariff Filings*, Memorandum Opinion & Order, 3 FCC Rcd 1281, at ¶296 (1987) ("*1988 Access Order*") (Suspending tariff revisions for Mountain Bell and Contel-Alabama because they included amounts for the "retroactive recoupment of amounts claimed to represent prior underearnings.").

[17] *See, e.g., Town of Norwood, Mass. v. FERC*, 53 F.3d 377, 381 (D.C. Cir. 1995) ("The retroactive ratemaking doctrine prohibits the Commission from authorizing or requiring a utility to adjust current rates to make up for past errors in projections."); *Consolidated Edison of NY v. FERC*, 347 F3d 964, 969 (DC Cir. 2003) (the rule against retroactive ratemaking "prohibits the Commission [i.e. FERC] from adjusting

Designation Order appears to assume that estimates of prior-period earnings levels can be used to adjust rates for the prospective period.[18]

The *Designation Order* requests extensive data on the extent to which pool earnings show reductions over time as a result of true-ups to pooling data, asks for detailed information as to the causes of such true-ups, seeks information on patterns shown in the data, and asks NECA to validate whether its projections of earnings erosion for the 2003 calendar year are consistent with those patterns. Failure to make such a showing, according to the *Designation Order*, could justify an adjustment to NECA's 2004 rates.[19]

While NECA has responded to these requests to the extent possible, it is critical to understand that information on earnings erosion is largely irrelevant to the question of whether the rates proposed in NECA's annual access filings are reasonable. As noted above, NECA is required to set its prospective rates to earn at authorized levels without regard to projected final earnings levels for prior periods. Furthermore, NECA does not

---

current rates to make up for a utility's over- or under-collection in prior periods."). Nor can the Commission order refunds of prior period earnings to the extent that rates during the relevant periods were filed on a streamlined basis and "deemed lawful" under section 204(a)(3)of the Act. *ACS of Anchorage, Inc. v. Federal Communications Commission*, 290 F. 3d 403 (D.C. Cir. 2002).

[18] The *Order* states, for example, that based on initial March, 2004 Form 492 reports of earnings in the special access category "NECA would have had to establish special access rates at a level approximately 10 percent lower than the 2003 level to have earned an 11.25 percent rate of return on rate base." *Designation Order* at ¶ 11. If the Commission wishes to revise its rules in some manner so as allow carriers to incorporate factors related to non-test period earnings levels in setting prospective rates, NECA believes that such a change would require a rulemaking proceeding, could apply only prospectively, and should apply even-handedly. That is, if the Commission is prepared to require carriers to factor prior period overearnings into calculations of future rates, it should also be prepared to permit carriers to factor prior period underearnings into account as well. Such a fundamental change in ratemaking methodologies is well beyond the scope of this proceeding, however.

[19] *Designation Order* at ¶ 18.

base its rate projections on data "true-ups" for prior periods, but rather bases those projections on final data that fully incorporate the effects of pool true-ups.[20]

In other words, even if NECA (or the Commission) could, via analyses of the data requested by the *Designation Order*, develop a formula that predicts with 100% accuracy how 2003 earnings will "true up" when the pool window closes in 2005, that information would have no bearing on rates set for the 2004-2005 test period because NECA did not use estimates of earnings erosion in preparing its rates for the test period. Nor would such a formula be helpful in evaluating NECA demand projections for the test period because those projections are based on final pooling data rather than initial estimates.

Far more relevant are the steps NECA actually uses to forecast costs and demand levels to the test period in its calculation of prospective rates. As discussed in Volume 2 of NECA's Annual Filing, NECA bases its forecasts of revenue requirements on detailed revenue requirement projections initially developed by cost companies, which take into consideration study area budget forecasts for the test period, historical trended data, and specific company plans and expected changes in service provisioning arrangements. If budget and separations data are not available from the company, NECA relies on available cost study information adjusted to reflect any updated information available from the company. This combined information is used in NECA's 2004 Annual Filing to develop access element revenue requirement for the three-year period 2003, 2004 and 2005.

[20] In assembling a series of prior period cost data points to estimate revenue requirements for a test period, NECA uses final data that fully reflect cost study submissions and other true-ups. There is, therefore, no need for NECA to estimate the effects of cost study updates on preliminary pool reported costs when preparing rate forecasts because that information has already been reflected in the data series.

To ensure that cost projections are accurate, NECA evaluates historical composite growth rates of key line items at both the total company and pool levels. These data are used in conjunction with budget and separations data provided by the companies to review the accuracy of the test period projections. All forecast data are then aggregated to a total pool level. Final test period revenue requirement growth for each pool is then compared to historical growth rates. This represents a key validation procedure to ensure the accuracy of the aggregate cost company revenue requirement projections for each pool.

In addition, NECA systematically looks for ways to improve demand forecast performance. A recent example is the introduction of a cellular price variable into NECA's econometric model used to predict access minutes.

The *Designation Order*, however, requests no information on the processes and procedures actually used by NECA to forecast costs and demand and to calculate proposed rates for the test period. It is for this reason that NECA respectfully requests that this portion of the investigation be terminated, and the Commission cancel the accounting order imposed by the July 1, 2004 *Suspension Order*. Nevertheless, NECA responds as indicated in the following paragraphs to the data requests specified in the *Designation Order*. NECA's responses are limited in some cases to data actually available within its settlement systems, and are provided without prejudice to the positions stated above.

Prior Period Earnings Data

Paragraph 14 of the *Designation Order* requests that NECA supply copies of its Form 492 final monitoring reports ("September 492s") for the periods 1993-1994, 1995-

1996, 1997-1998, 1999-2000, and 2001-2002. Exhibit 1 contains FCC Form 492s filed by NECA for the 1993/94, 1995/96, 1997/98, 1999/2000, 2001/2002 monitoring periods. These filings were made in September 1995, 1997, 1999, 2001, and 2003, respectively.

Intrastate Earnings Monitoring Data

Paragraph 14 of the *Designation Order* directs NECA to provide intrastate as well as interstate earnings data for pooling companies. NECA does not collect or maintain intrastate earnings monitoring data and cannot respond to this portion of the *Designation Order*.

Annual Earnings Monitoring Data

Paragraph 14 of the *Designation Order* directs NECA to provide, in addition to data for two-year monitoring periods dating back to 1993, annual earnings reports based on data reported to NECA as of August of each year. Consistent with the requirements of Table 1 of Appendix A of the *Designation Order*, NECA provides the requested data as Exhibit 2 to this Filing. The Table is populated with initial data (as of the August following a calendar year, or the last year of a monitoring period)[21] and final data (as of the December two years following the end of a calendar year or the last year of a monitoring period) on total interstate settlement revenues,[22] total expenses and taxes, operating income, rate base, and rate of return. These data are provided for the common

[21] August data is used because this is the most recent month available for analysis when the September Form 492 Report is submitted.

[22] Settlement Revenue data shown in Exhibit 2 is the companies' share of the total revenues reported to the NECA pool. In Exhibit 2, one component of revenues is shown as Expenses and Other Taxes, and the remainder is shown as Operating Income.

line, traffic sensitive switched and traffic sensitive special access categories for each calendar year 1993 through 2002 as well as the underlying monitoring periods.

Final Earnings Results

Paragraph 15 of the *Designation Order* also directs NECA to identify pooling companies' final interstate results (based on NECA's 24-month true-up process at the access element level of detail for each category).

NECA provides the requested data as Exhibit 2 to this filing in the form specified by Table 1 of Appendix A of the *Designation Order*. This Table shows the differences between the initial and final amounts for each interstate FCC Form 492 category for each calendar year and each underlying monitoring period. Amounts will appear slightly different than those submitted in FCC Form 492 reports since they represent data for all pool participants and are not adjusted for changes in the number of companies for which NECA files FCC Form 492 reports. As noted above, intrastate earnings monitoring data is not available.

Explanation of Differences between September 492s and Final Results

Paragraph 16 of the *Designation Order* directs NECA to explain any differences in the total interstate amounts that NECA reported on its September 492s and the final amounts identified in response to paragraph 15 as well as differences in intrastate amounts. The *Designation Order* also directs NECA to address whether there is any pattern evident in the true-ups, the reason for any such pattern, and whether any such pattern may be expected to recur in subsequent years.

The data for a calendar year or monitoring period reported as of August of the following year are preliminary because the window for revisions remains open for twenty-four months after the calendar year ends. For example, the window for revising calendar year 1993 data closed as of December 1995.

Cost company exchange carriers generally base cost settlements data initially on the most recently completed cost study combined with projections related to operating budgets. Carriers base final cost true ups on their actual cost separations studies completed pursuant to FCC accounting, separations and access charge rules.

Following the end of a calendar year, companies close their books and begin analyzing general ledger entries. Companies and/or their consultants then categorize investments and expenses, separate costs between jurisdictions, allocate costs among access categories, review results for accuracy and make corrections where needed. At this point, companies begin reporting cost study results in NECA settlements.

NECA receives the bulk of member company cost studies for a calendar year in the 3rd and 4th quarters of the following year. Billed revenue accounts typically undergo most revisions within six months after a monthly billing cycle. Average schedule companies generally true up line counts and access minutes in settlements at the same time as revenues. True-ups of average schedule line haul settlements data are completed on a monthly, quarterly, or annual basis, depending on each company's practice for line haul studies.

Data required for support payment true ups are submitted twelve months after the calendar year ends. Adjustments to support payments are not reflected in pool earnings until the following year. For example, revisions to Local Switching Support (LSS) for

2002 were filed with USAC in December 2003 and not reported to the pool until April 2004 coincident with adjustment processing by USAC. Because cost study and support payment true ups typically occur in the year after the calendar year, they are the main causes for the difference between initial and final views of a calendar year.

Generally speaking, for each calendar year (1993 through 2002) and monitoring period, the NECA pools have experienced earnings erosion (i.e., final pool earnings falling below initial reported pool levels). This general pattern in reductions in earnings occurs when actual costs are reported to NECA for pool settlement true-ups after the end of a calendar year or monitoring period that exceed the initial estimated pool settlement costs reported by LECs.

True-up in support amounts (e.g., local switching support) also occur after the initial calendar year or monitoring period, and after final cost studies are submitted. NECA notes that the gap between initial and final revenues has increased in recent years because support dollars have grown in proportion to revenue. The gap between initial and final views of Traffic Sensitive Switched revenue jumped in magnitude with the introduction of LSS in calendar year 1998.[23] Similarly, with the introduction of ICLS, the Common Line Revenue gap is widening in calendar year 2002 compared to previous years as ICLS true-ups are processed in the July through December 2004 settlement

[23] For example, Exhibit 2, Table 1 shows that the gap between initial and final traffic sensitive revenues was less than $1 million in 1997. It jumped to over $6 million in 1998 with the introduction of LSS. NECA has provided an additional true-up table for switched access revenue (Exhibit 2, Attachment 2) that demonstrates the extent to which LSS accounts for the persistently wide gap between initial and final revenues since 1998.

period.[24] Billed revenue true-ups, in contrast, do not have a material impact on differences between initial and final earnings reports.

The information provided in Exhibit 2 illustrates this earnings erosion by comparing initial data to final data for calendar years 1993 through 2002 and the underlying monitoring periods. The data generally show that true-ups have a relatively small effect on common line earnings levels, and a relatively large effect on special access earnings. Such volatility is inherent to the relatively small investment base associated with special access and the high level of uncertainty surrounding special access demand.[25] Special access volatility has intensified recently with increased emphasis on DSL and broadband deployment.

Data for 2002 show some exceptions to this trend. For example, switched access earnings during this period show an anomalous increase attributable in part to true-ups associated with implementation of the Commission's MAG Order.[26] More generally, true-ups from year to year are variably driven by changes in technology, regulation and the marketplace and the resulting uncertainty that the companies experience in estimating

---

[24] Under current rules rate of return LECs recover a substantial portion of the common line revenue requirements on a residual basis via the ICLS mechanism, and are required to "true up" that data at the authorized rate of return. As a result, it will no longer be possible for a carrier to achieve above-authorized earnings levels in this category.

[25] Demand for special access services is driven by changes in the business marketplace and varying needs for point-to-point facilities. In rural areas especially, changes in service configurations by a relatively few businesses can have a disproportionate effect on company special access costs and billings. Switched service demand is measured in billions of minutes, however, and costs and demands represent a larger basis that somewhat mitigates the degree of change in earnings levels.

[26] Multi-Association Group (MAG) Plan for Regulation of Interstate Services of Non-Price Cap Incumbent Local Exchange Carriers and Interexchange Carriers, CC Docket No. 00-256, Federal-State Joint Board on Universal Service, CC Docket No. 96-45, Access Charge Reform for Incumbent Local Exchange Carriers Subject to Rate-of-Return Regulation, CC Docket No. 98-77, Prescribing the Authorized Rate of Return for Interstate Services of Local Exchange Carriers, CC Docket No. 98-166, *Second Report and Order and Further Notice of Proposed Rulemaking in CC Docket No. 00-256, Fifteenth Report and Order in CC Docket No. 96-45, and Report and Order in CC Docket Nos. 98-77 and 98-166*, 16 FCC Rcd 19613 (2001).

their investment and costs. Recent changes in switched access costs reflect changes from analog to digital services and from larger switches to smaller, less costly devices. Special access is currently moving from voice to data services, and packet technologies such as DSL and ATM have added even more cost uncertainties in recent years.

Most Recent Adjustments for 2003

Paragraph 17 of the *Designation Order* directs NECA to provide data for calendar year 2003 reflecting the most recent adjustments in its 24-month true-up process, including an estimate of what NECA believes the final results will be once true-ups are finished and an explanation of how NECA made its estimate.

Exhibit 2 shows initial and projected final data by FCC Form 492 category for 2003. Consistent with the explanations provided in connection with paragraphs 14, 15 and 16 of the *Designation Order*, the current 2003 projected numbers as of August 2004 are lower than the initial 2003 amounts for all the access categories. However, as noted above, these 2003 projected numbers still have another 16 months to true up and therefore cannot be considered final.

Attachment 1 to the Table presented in Exhibit 2 explains the derivation of the projected final data values for 2003.

Analysis of True-Up Patterns and Correlation to 2003 Projection

Paragraph 18 of the *Designation Order* directs NECA to describe the pattern it perceives in the flow of revenues, expense and investments during the 24-month true-up period, including data on the extent to which each year's return changed during this

process for years 1993 through 2003. This portion of the *Designation Order* also directs NECA to correlate this pattern with its projection for the 2003 data made pursuant to instructions set forth in paragraph 17 of the *Designation Order*.

As described above, the NECA pools have generally experienced earnings erosion over the past 10 years, with true-ups most significantly affecting special access earnings. There is, however, no precise correlation between prior true-up data and estimates of 2003 true-ups. Pool earnings changes over time reflect differences in the estimates made by carriers for initial pool reporting versus final cost study results and the timing of updates that carriers report to correct prior estimates (*i.e.*, before or after the cut-off date for the September Form 492 filing). True-ups are also affected by year-to-year changes in the approximately 1200 study areas that participate in NECA's pools,

True-ups are also influenced by carrier perceptions of market dynamics and changes in technology and actual usage patterns. With the telecommunications industry facing perhaps the most turbulent era in its history, it is thus highly doubtful that analyses of relationships between prior period true-up patterns and NECA's 2003 predictions can be used as a reasonable basis for making adjustments to NECA's proposed rates.

Methods of Preparing Initial Submissions

Paragraph 19 of the *Designation Order* directs NECA to explain how carriers prepare and report initial data and final data to NECA.

To the extent that carriers have not completed cost studies, the initial numbers shown in Exhibit 2 reflect cost company pool settlements inputs that are based on the most recently completed cost study, combined with projections related to the company's

operating budget. Once cost studies are completed, companies report actual results from these studies in pool settlements.

Initial reported revenues in any given month will often reflect an average of the three prior months. As bills are rendered, companies report the actual revenues to the pool, usually within six months of the initial estimate. Because average schedule settlements are demand-driven, they follow a similar pattern.

Identification of Largest Adjustments

Paragraph 20 of the *Designation Order* directs NECA to identify either the 120 largest adjustments or adjustments that account for 80 percent of post-Form 492 true-up totals for years 1993 – 2002. The *Designation Order* specifies that the list of adjustments should not include data reflecting the submission of the initial cost study performed for the year in question, but should reflect adjustments made subsequent to the submission of such cost study data. For each adjustment identified, NECA is required to provide the date the adjustment was reported, the month(s) to which it is applied, and the cause of the adjustment.

Exhibit 3A identifies study area data that account for 80 percent of the total true ups from the initial to final earnings for each of the calendar years 1993 through 2002. In most years the number of study areas making adjustments that account for 80% of total true ups is far lower than 120. Exhibit 3B gives the number of adjustments made by the study areas accounting for 80% or more of the true-ups for each of the calendar years 1993 to 2002 for each access category. Exhibit 3B provides explanations for the adjustments made for the companies shown in Exhibit 3A between the initial view and

the final views of data. NECA can only provide explanations of adjustments as far back as 2001 and 2002 since it only retains this information in electronic format for a limited period of time.[27] NECA cannot provide explanations for prior time periods in the short time provided for in the Designation Order since this data is not available electronically, but rather in paper form only.

Exhibit 3B provides explanations for companies listed on Exhibit 3A, which are limited to cost companies. NECA does not have FCC Form 492 category data for average schedule companies. However, NECA does recognize that changes in average schedule companies' data contributes to differences in initial and final settlement results. Therefore, NECA is providing on Exhibit 3C initial and final views of average schedule settlements by calendar year by access category for those average schedule companies who have shown the greatest difference in settlements as defined using the same criteria used in Exhibit 3A for cost companies.

Because the data provided in response to this question involves company-specific data and could be regarded as competitively-sensitive by member companies, NECA hereby requests that the information set forth in Exhibit 3 (including all subsections) be treated on a confidential basis, and that companies be given notice and adequate opportunity to demonstrate the proprietary nature of this information before it is made available for public inspection.

[27] Explanations are retained in electronic format for data periods that have been entered within the last 24 months. For example, any explanations entered into the settlement system from October 2002 to the present have been captured electronically. As a result, explanations for 2002 data changes that occurred after the initial data period (i.e., beginning in September 2003) and the most recent data period (2002 is not yet final) are available electronically. For 2001 changes, only those changes that occurred between October 2002 and the final data input (i.e., December 2003) are available electronically.

NECA did not limit the adjustments shown in Exhibit 3A to those changes that occurred after the submission of final cost studies. Adjustments of this type typically represent only approximately 10% of total adjustments in any given year and would not provide a meaningful display of material adjustments. Virtually all the material adjustments that were made in calendar years 1993 through 2002 that explain the changes in earnings result from submission of cost studies and support true-ups.[28] Moreover, NECA has no ready way of isolating adjustments that are made after a cost study is submitted.

Companies with the Largest Number and Largest Aggregate Number of Adjustments

Paragraph 21 of the *Designation Order* directs NECA to identify the two companies that submitted the greatest number of adjustments and the two companies with the largest aggregate amount of adjustments in each year.

Exhibit 4A shows for each access category by calendar year those study areas that account for the largest number of adjustments. Exhibit 4B, using the settlement revenue values from Exhibit 3A and the number of adjustments from Exhibit 4A, identifies the top 2 study areas accounting for the largest dollar value adjustments and the largest number of adjustments for each calendar year.

Exhibit 4C provides initial and final settlement revenue, expenses and taxes, operating income, rate base and rate of return data for the 1999/2000 and the 2001/2002 monitoring periods for the study areas listed in Exhibit 4B as requested in Table 2 of Appendix A of the *Designation Order*. NECA is unable to provide the account level

[28] Changes to data that occur after cost studies are submitted are often the result of NECA cost study reviews. Information on significant data adjustments that occur as a result of this activity are reported to the Commission on or about January 30th of each year.

detail requested in Table 2 of Appendix A since pool reports do not include this information.

Because the data provided in response to this question involves company-specific data and could be regarded as competitively-sensitive by member companies, NECA hereby requests that the information set forth in Exhibit 4 (including all subsections) be treated on a confidential basis, and that companies be given notice and adequate opportunity to demonstrate the proprietary nature of this information before it is made available for public inspection.

Carrier Options for Reporting Adjustments

Paragraph 22 of the *Designation Order* directs NECA to explain what options carriers had in reporting adjustments to NECA and to what period (months) carriers applied their data.

Carriers report adjustments to NECA in compliance with NECA's pool procedures. The following is an overview of NECA's settlement system and the pool reporting procedures:

NECA's interstate access settlement system provides for the calculation of settlement results on a monthly basis. The settlement system aggregates data from all pool participants, producing a settlement result for each company. The total pool settlement result includes a common pool rate of return applied to each company's reported average net investment.[29] A carrier's reported revenues are deducted from its

[29] Under Commission rules, average schedule companies do not report investment or expense data. Rather, average schedule company settlements are based upon formulae that simulate cost company settlements. Average schedule companies report key demand units and revenues each month, which NECA uses to calculate each company's settlements.

calculated settlement to produce a net balance (either negative or positive.) If the result is negative, the carrier will remit that amount to NECA; if positive, NECA remits the amount to the carrier.

Initial monthly results are recalculated in each of the subsequent 24 calendar months on the basis of data adjustments reported by pool participants. Thus, 24 months will elapse between initial pool results for a given data month and final results for that data month. Similarly, 24 months will elapse between initial annual pool results for a given calendar year and final results for that year.

On a monthly basis, exchange carriers provide an initial estimate (Data Month Estimates or "DMEs") of all data items used in the development of settlement results. These data items from cost companies include interstate access minutes of use; access lines in service; revenues; uncollectibles; income adjustments for Federal income tax; income tax credits; income allowance for funds used during construction; expenses and other taxes and average net investment.

In subsequent months, all exchange carriers are required to report adjustments to DMEs, reflecting actual interstate access results. Such Data Month Adjustment or "DMA" reports are necessary whenever the carrier identifies a change to previously-reported data resulting from items such as completion of a cost study or discovery of errors in previously recorded data that would result in a change to data developed at the Part 69 level of detail.

Initial demand and revenue data estimates must be adjusted to reflect actual values within 2 months of the reporting of a DME. The reported adjustments must be applied to the applicable data month, and are not to be included in a subsequent data

month estimate. For example, in October 2004, adjustments to data initially reported for the June 2004 data month must be retroactively applied to the June 2004 data month, and not netted with data reported for October 2004.[30]

Cost studies produce adjustments to interstate access expenses & other taxes (EOT) and average net investment (ANI) that must be reported to NECA (via DMA reports) after the completion of the study. As required for revenue and demand data, EOT and ANI adjustments must be reported back to the applicable pool data month(s).

Carriers do not have options affecting what adjustments need to be reported. Rather, they are required to true up all differences between current settlements data and final cost studies, revenues or average schedule settlements demand. Carriers may not all choose to enter such adjustments at the same time. The timing of adjustments by each carrier depends on its accounting and cost study practices. All carriers are required to complete adjustments according to NECA's 24 month true up schedule.

Carriers are required to report adjustments to previous estimates for all months of the cost study period, once the study is completed. Succeeding data months should also be adjusted, on the basis of the latest cost study combined with other forecast adjustments known to the company. All adjustments reported to NECA's settlement system are subject to review by NECA. Subsequent reviews of company data by NECA may require the reporting of retroactive adjustments by the carrier to any applicable prior data month(s) still "open" within the current 24-month reporting window. [31]

---

[30] An exception to this requirement is made for reporting realized uncollectible revenues; these adjustments are applied to the pool data month in which the uncollectible is actually realized (written off the books.)

[31] Additionally, NECA pool reporting procedures require carriers to submit a revision whenever an error is discovered in previously-reported data, at any time during the 24-month pool reporting window.

Comparison of Data Submission Times for Cost Studies and ICLS True-ups

Paragraph 23 of the *Designation Order* notes that the true-up process for Interstate Common Line Support (ICLS) must be completed within 12 months of the close of a calendar year and directs NECA to explain why a 12-month time frame for ICLS is consistent with a 24-month true-up process for the NECA pools.

Data submission timeframes for cost studies and ICLS are consistent. Cost studies are completed within 7 to 12 months from the end of the year, consistent with timeframes for ICLS true-ups. On occasion data adjustments are submitted afterwards, but these submissions are infrequent. Additional open months allow for follow-up data reviews and adjustments if errors are discovered.

b. Issue 2: Whether NECA's entrance facility charges include inappropriate demand projections and are unjust and unreasonable.

The second issue designated for investigation is "whether NECA's entrance facilities rates are calculated using demand projections for entrance facilities that are neither ordered nor used, and whether the resulting rates are unjust or unreasonable under section 201 of the Act."[32]

As stated, this issue appears to bear at least some relation to NECA's annual access filing in that it references possible "inappropriate" demand projections. It is readily apparent, however, that the real issue raised by the *Designation Order* is not

[32] *Designation Order* at ¶ 24.

whether NECA's entrance facility rates were calculated correctly but rather, whether the terms and conditions governing application of those rates are reasonable.[33]

The *Designation Order*, for example, references section 51.515 of the Commission's rules (prohibiting assessment of access charges on purchasers of unbundled network elements) and asks how the practice of assessing entrance facility charges on collocated customers can be consistent with this rule. The *Designation Order* also asks for detailed information on service provisioning arrangements, including copies of interconnection agreements, and directs NECA to explain why requiring a customer to pay both collocation and entrance facility rates is lawful. The *Designation Order* does not ask any questions, however, as to how NECA calculated its entrance facility charges, nor does it ask NECA to supply any data regarding the cost or demand estimates underlying those rate calculations.

As noted above, NECA tariff provisions governing terms and conditions applicable to entrance facilities have been in effect for many years,[34] and NECA did not propose any changes to these provisions in its 2004 annual access filing.[35] Thus, questions regarding the reasonableness of those provisions are outside the scope of NECA's filing and therefore not subject to investigation under section 204(a) of the

---

[33] If the Commission were to accept the idea that NECA's demand forecasts were overstated due to incorrect assessments of entrance facility charges on collocated carriers, the result would be an increase in those charges.

[34] In particular, the tariff language requiring that the entrance facility charge applies even when the customer designated premises is collocated with the serving wire center was introduced in NECA's F.C.C. Tariff No. 5, as well as in other local exchange carrier interstate access tariffs, concurrent with the introduction of the entrance facility rate element required by the Commission's Transport Restructure (CC Docket No. 91-213). This provision was intended to ensure that AT&T did not receive an unfair advantage over other interexchange carriers in instances where the AT&T point of presence (POP) was located at the LEC serving wire center.

[35] Indeed, under section 69.3(a) of the Commission's rules, NECA is not even permitted to propose changes to tariff terms and conditions in the context of an annual rate filing.

Act.[36] Accordingly, NECA respectfully requests that the Commission terminate this portion of the proceeding as well, and take no further action with respect to the application of entrance facility charges in the context of this proceeding.

NECA nevertheless responds as follows to the questions set forth in the *Designation Order* with respect to the lawfulness of imposing entrance facility charges in circumstances involving collocated access and local interconnection arrangements:

Application of Access Charges to Customers who have Interconnection Arrangements

The *Designation Order* correctly notes that section 51.515 prohibits the assessment of access charges on purchasers of elements that offer telephone exchange or exchange access services. However, to the extent that a customer uses collocated arrangements[37] for the origination and termination of interstate interexchange traffic, the access charges specified in NECA's tariff, including entrance facility charges, do apply. Indeed, the Commission's Part 69 rules *require* the application of entrance facilities

[36] As noted above, section 204(a) authorizes the Commission to suspend and conduct investigations "[w]henever there is filed *any new or revised* charge, classification, regulation or practice . . . ." 47 U.S.C. § 204(a) (emphasis added). Pursuant to the "filed rate doctrine", tariff rates and provisions that have been duly filed and permitted to become effective are considered at a minimum to be "legal" and not subject to re-suspension and re-investigation under section 204 simply because a carrier has proposed changes to other provision of its tariff.

[37] The Commission has adopted two sets of rules for collocation. Part 64 expanded interconnection collocation (47 C.F.R. § 64.1401) is available for access to interstate switched and special access transport services. NECA tariff participants are explicitly exempted from expanded interconnection requirements. Part 51 local interconnection collocation (47 C.F.R. § 51.323) pursuant to section 251(c)(6) of the Telecommunications Act is available to competitive local exchange carriers (LECs) for the provision of local exchange and exchange access to the competitive LEC's customers. The Commission has explained that the provision of interexchange service to the incumbent LEC's customers is not telephone exchange or exchange access. Implementation of the Local Competition Provisions in the Telecommunications Act of 1996, CC Docket No. 96-98, Interconnection between Local Exchange Carriers and Commercial Mobile Radio Service Providers, CC Docket No. 95-185, *First Report and Order*, 11 FCC Rcd 15499 (1996).

charges in these circumstances.[38] Where carriers use collocation arrangements for the origination and termination of interexchange traffic, application of access charges therefore does not violate section 51.515 of the Commission's rules.[39]

Consistent with the requirements of the Commission's *Triennial Review Order,* NECA's tariff permits customers providing both interexchange and local exchange services (such as GCI) to commingle traffic on the same facility.[40] However, as the TRO makes clear, LECs are not required to "ratchet" or prorate facility charges,[41] nor are rate of return LECs required to tariff an access cross-connect element in the absence of geographically deaveraged rates for transport services.[42] Thus, NECA Tariff F.C.C. No. 5's assessment of entrance facility charges on customers obtaining combined interconnection and interexchange facilities is permissible under the Commission's Interconnection rules.

---

[38] 47 C.F.R. § 69.110(a) ("A flat-rated entrance facilities charge expressed in dollars and cents per unit of capacity *shall be assessed* upon all interexchange carriers and other persons that use telephone company facilities between the interexchange carrier or other person's point of demarcation and the serving wire center.") (emphasis added).

[39] 47 C.F.R. § 51.515(d) further clarifies that the prohibition on interstate access charges applies to elements purchased by requesting carriers providing *both* telephone exchange and exchange access services to the requesting carrier's end users.

[40] As described below, GCI is commingling unbundled network elements that it uses to offer local exchange service and exchange access with tariffed access services it uses in the provision of interexchange service to ACS' end users.

[41] "[W]e do not require incumbent LECs to implement any changes to their billing or other systems necessary to bill a single circuit at multiple rates (*e.g.*, a DS3 circuit at rates based on special access services and UNEs) in order to charge competitive LECs a single, blended rate." Review of the Section 251 Unbundling Obligations of Incumbent Local Exchange Carriers, CC Docket No. 01-338, Implementation of the Local Competition Provisions of the Telecommunications Act of 1996, CC Docket No. 96-98, Deployment of Wireline Services Offering Advanced Telecommunications Capability, CC Docket No. 98-147, *Report and Order and Order on Remand, and Further Notice of Proposed Rulemaking* 18 FCC Rcd 16978 (2003) *(Triennial Review Order)* at ¶ 580.

[42] Multi-Association Group (MAG) Plan for Regulation of Interstate Service of Non-Price Cap Incumbent Local Exchange Carriers and Interexchange Carriers, CC Docket No. 00-256, Federal-State Joint Board on Universal Service, CC 96-45, *Report and Order and Second Further Notice of Proposed Rulemaking*, 19 FCC Rcd 4122 at ¶ 31 (2004)..

Details of ACS Service Arrangements

The *Designation Order* at paragraph 28 directs NECA to explain in detail the manner in which ACS companies provide collocation and entrance facility arrangements to GCI and other interexchange carriers in specific offices located in Fairbanks and Juneau, to explain any divergent treatment, and to provide a diagram showing how collocation and entrance facilities are provisioned.

NECA has obtained information from ACS indicating that there are three facilities-based interexchange carriers (IXCs) operating in the Fairbanks and Juneau offices, one of which is affiliated with ACS. Each utilizes ACS' network to originate and terminate calls to ACS local exchange service end users.

Two of the three carriers, including ACS' affiliate, obtain access via traditional arrangements and are accordingly assessed tariffed switched access charges, including entrance facility rates, for the origination and termination of interexchange traffic for ACS' local exchange service end users.

GCI operates as a competitive local exchange carrier (CLEC) at each of the identified offices in these areas and has arranged for section 251(c)(6)collocation pursuant to negotiated interconnection agreements that establish "the rates, terms and conditions for local interconnection, local resale and purchase of unbundled network elements".[43] Copies of the currently-effective interconnection agreements between ACS and GCI, as approved by the Regulatory Commission of Alaska, are included as required by the *Designation Order* in Exhibit 5.

[43] *See* Exhibit 5, ACS-F/GCICC and ACS-AK/GCICC Interconnection Agreements at ii.

Exhibit 6 includes the diagrams requested by the *Designation Order*. These diagrams show that GCI's CLEC operation is correctly charged for collocation, total service resale and unbundled network elements to the extent it uses ACS' facilities to provide local exchange service to its own end users, and exchange access to IXCs (including GCI's IXC operation) that provide services to those end users. ACS has confirmed that GCI's CLEC operation is *not* charged tariffed switched access charges related to these services. GCI's IXC operation is, however, charged tariffed switched access charges, including entrance facility rates, for the origination and termination of interexchange traffic to ACS' local exchange service users and GCI's total service resale end users. Thus, there is no divergent treatment of IXCs in the application of tariffed access charges.

Figures 1 and 2 of Exhibit 6 depict the facility provisioning of collocation and entrance facilities in the identified offices. Both are annotated to reflect the various charges applicable to each collocation or entrance facility arrangement. Approximately half of the DS3 facilities running between GCI's switch in Fairbanks and ACS' Globe office, and all of the DS3 facilities running between GCI's switch in Juneau and ACS' Juneau-Main office, were ordered by GCI as tariffed access services and reflect the commingling of tariffed mixed use access services with unbundled network elements. Rates for the DS3 facilities and associated DS3/DS1 multiplexers are ratcheted to reflect the mixed use of these facilities as specified in section 6.4.7 of Tariff F.C.C. No. 5. The remaining DS3 facilities in Fairbanks were ordered pursuant to the interconnection agreement to serve the needs of GCI's Fairbanks local exchange service end users and are not assessed tariffed access charges.

c. **Issue 3: Whether the language in section 6.1.3 of NECA Tariff FCC No. 5 relating to entrance facility charges is unjust or unreasonable.**

Issue 3 references the language of section 6.1.3 of NECA's Tariff (governing application of entrance facility charges) and directs NECA to file draft language that could be used to revise this section if the Commission reaches an adverse decision on Issue 2.

As stated above, NECA believes that its current tariff terms and conditions are reasonable and, since it did not propose change to these terms and conditions in its annual access filing, questions regarding them are outside the scope of this tariff investigation. Nevertheless, NECA has considered an alternative approach to the provision of entrance facilities for those carriers that have obtained section 251(c)(6) collocation pursuant to Part 51 of the Commission's rules.

Specifically, NECA would propose to establish a new category of entrance facility that would apply in lieu of the "traditional" entrance facility charge. The new rate element would be priced below the existing charge and designed to recover the costs associated with the new element.[44] In order to make such a filing NECA would need time to obtain and develop the necessary cost support and demand for the new element, and may also need to consider adjustments to other traffic sensitive rates.

---

[44] This could be accomplished by amending section 6.1.3(A)(1) of Tariff F.C.C. No. 5 by inserting the following language after the fourth paragraph:

> If the customer designated premises and the serving wire center are collocated in the same Telephone Company building pursuant to an interconnection agreement with the Telephone Company that provides for collocation as specified in section 251(c)(6) of the Communications Act of 1934 As Amended By The Telecommunications Act Of 1996, then the rate specified in Section 17.2.2 for an Interconnected Entrance Facility will apply.

NECA submits draft tariff language in response to the *Designation Order* without prejudice to its position that existing tariff terms and conditions governing assessment of entrance facilities charges are reasonable and consistent with the Commission's rules.

III. CONCLUSION

The Commission's inquiry into the extent of earnings erosion in past years is largely irrelevant to the reasonableness of rates proposed in NECA's Transmittal No. 1030. Similarly, questions regarding the reasonableness of NECA tariff provisions establishing terms and conditions for assessment of entrance facility charges are outside the scope of this proceeding because NECA did not propose changes to those provisions in the instant filing. Accordingly, NECA respectfully requests that the investigation instituted by the Commission in its *Suspension Order* be terminated, the accounting requirements imposed by that Order cancelled, and that no further action be taken with respect to NECA's annual access tariff filing.

Notwithstanding the above, NECA has responded to the extent possible to the information requirements specified in the *Designation Order*. NECA's data submissions show that earnings erosion is a real phenomenon and that initial earnings reports for the special access category provide no basis for suspension or further investigation of NECA's proposed rate increases. Further, NECA shows that its tariff provisions

governing the assessment of entrance facility charges are reasonable and that charges assessed on GCI in ACS' Fairbanks and Juneau end offices are consistent with the Commission's Part 51 and 69 rules.

Respectfully submitted,

NATIONAL EXCHANGE CARRIER
ASSOCIATION, INC.

By: /s/ Richard A. Askoff
Richard A. Askoff
Its Attorney

80 South Jefferson Rd.
Whippany, NJ 07981
(973) 884-8000

October 12, 2004

CERTIFICATE OF SERVICE

I hereby certify that a copy of NECA's Direct Case was served this 12th day of October 2004, either by electronic filing, e-mail, or first class mail, to the persons listed below.

By: /s/ Elizabeth R. Newson
Elizabeth R. Newson

The following parties were served:

Marlene H. Dortch
Secretary
Federal Communications Commission
445 12th Street, SW
Washington, DC 20554
(via ECFS)

Marvin Sacks
Wireline Competition Bureau
Federal Communications Commission
445 12th Street SW
Washington, DC 20554
(via e-mail)

Douglas Slotten
Wireline Competition Bureau
Federal Communications Commission
445 12th Street SW
Washington, DC 20554
(via e-mail)

Best Copy and Printing, Inc.
Room CY-B402
445 12th Street, SW
Washington, DC 20554
(via first class mail)

NECA Direct Case

WC Docket No. 04-372

Exhibit 1

Exhibit 1

NECA NATIONAL EXCHANGE CARRIER ASSOCIATION

William E. Stern
Vice President
Tariff Cost and Regulatory Matters

September 29, 1995

Federal Communications Commission
1919 M Street, NW
Washington, DC 20554

ATTENTION: **Common Carrier Bureau**

SUBJECT: **Rate of Return Report, Form FCC 492**

RECEIVED
SEP 29 '95
FEDERAL COMMUNICATIONS COMMISSION
SECRETARY

To Whom it May Concern:

Attached please find, in accordance with Part 65.600 of the Commission's Rules, two copies of Form FCC 492, Rate of Return Report covering the quarterly period of April 1, 1995 through June 30, 1995 and the cumulative period from January 1, 1995 through June 30, 1995 for the common line and traffic sensitive pools administered by NECA.

Also attached are two copies of Form FCC 492, Rate of Return Report covering the two-year monitoring period beginning January 1, 1993 and ending December 31, 1994 for the common line and traffic sensitive pools administered by NECA.

If there are any questions regarding this, please call me.

Sincerely,

William E. Stern

WES/jhk

Enclosures

FEDERAL COMMUNICATIONS COMMISSION
Washington, D.C. 20554

1. Name and Address of Reporting Company	2. Reporting Period
ational Exchange Carrier Association 100 South Jefferson Road Whippany, NJ 07981	(a) Quarterly Period Covered From: To: (b) Cumulative Period Covered: From: 01/93 To: 12/94

FCC 492
Common Line Pool

RATE OF RETURN REPORT
(Read Instructions on Reverse Before Completing)
Dollar Amounts Shown in Thousands

3. Particulars	Common Line	
	Current Quarter	Cumulative
1. Total Revenues	N/A	$ 1,750,518
2. Total Expenses and Taxes	N/A	$ 1,426,835
3. Oper. Inc. (Net Return) (1-2)	N/A	$ 323,683
4. Rate Base-(Avg. Net Invest.)	N/A	$ 1,340,549
5. Rate of Return (¾) Annualized	N/A	12.07%
6. FCC Ordered Refund-Amortized for Current Period (see Instr. I)	N/A	$ 0
7. Net Return (incl. effect of FCC Order Refund) (3+6)	N/A	$ 323,683
8. Rate of Return (incl. effect of FCC Order Refund) (7/4) Annualized	N/A	12.07%

4. Multiplicative Factor Used for Annualizing Rate Of Return for Cumulative Measurement Period	0.50
5. Total Out-of-Period Adjustment (See Instr. L)	$0

6. Certification: I certify that I am the chief financial officer or the duly assigned accounting officer: that I have examined the foregoing report; that to the best of my knowledge, information, and belief, all statements of fact contained in this report are true and this report is a correct statement of the business and affairs of the above-named respondent in respect to each and every matter set forth therein during the specified period.

Date	Typed Name of Person Signing	Title of Person Signing	Signature
9/29/95	John A. Greig	Vice President & Chief Financial Officer	John A. Greig

LFUL FALSE STATEMENTS MADE ON THIS FORM ARE PUNISHABLE BY FINE AND/OR IMPRISONMENT (U.S. CODE, TITLE 18, Section 1001), AND/OR VOCATION OF ANY STATION LICENSE OR CONSTRUCTION PERMIT (U.S. CODE, TITLE 47, Section 312(a)(1)), AND/OR FORFEITURE (U.S. CODE, TITLE 47, Section 503).

National Exchange Carrier Association, Inc.
100 South Jefferson Road
Whippany, NJ 07981

Cumulative Period Covered
from: 01/93 to 12/94

Common Line Pool Form 492
Additional Statements

Pursuant to Section 65.600 of the Commission's Rules, NECA is submitting cumulative period Rate of Return information for the Common Line Pool for the period January 1993 through December 1994, as of the August 1995 settlement view.

All of the individual line items on Form 492 include estimates and are subject to further adjustments, as Exchange Carriers revise data. The amounts in this report require the following additional explanations:

1) This Common Line-only pool report supplements data contained in NECA's combined Common Line/Traffic Sensitive pool Form 492 Report. Common Line data contained herein is duplicative of the data contained in NECA's combined report and the combined reports of individual exchange carriers that participate in NECA's Common Line pool but not its Traffic Sensitive pool.

2) Thirty-nine companies converted from average schedule settlements to cost-based settlements during the monitoring period. These conversions affect the levels of expenses and investment associated with the Common Line Pool during the reporting periods.

3) The 1992 Modification of Average Schedules was effective beginning July 1, 1992 through June 30, 1993. The 1993 modification of average schedules was effective beginning July 1, 1993 through June 30, 1994. The 1994 modification of average schedules was effective beginning July 1, 1994 through June 30, 1995. These formulas are the basis for total payments to average schedule companies during the monitoring period which are included, along with Category I.B NECA administrative expenses, in line 2 of NECA's Form 492.

4) Some cost company reported expenses and investments included in NECA's FCC 492 report are based upon estimated data. Historically, expense and investment levels increase as companies begin reporting actual data. Considering this, it is expected that the rates of return reported on NECA's Form 492 report will decline as the companies update their studies.

5) The effects of Commission decisions and rulings may result in further adjustments as Exchange Carriers revise data reported to NECA.

6) The report includes cumulative period rate of return data reported to NECA for 1,255 study areas that have participated in NECA's Carrier Common Line tariffs throughout the monitoring period. Actual cost and average schedule settlements information is used for the study areas in the report. Revenues for these study areas are derived using the pool realized rate of return.

FEDERAL COMMUNICATIONS COMMISSION
Washington, D.C. 20554

Approved by OMB 3060-0355
Expires 4/30/95

1. Name and Address of Reporting Company

National Exchange Carrier Association
00 South Jefferson Road
hippany, NJ 07981

2. Reporting Period

(a) Quarterly Period Covered
From: To:
(b) Cumulative Period Covered:
From: 01/93 To: 12/94

FCC 492
NECA Tariff Participants

RATE OF RETURN REPORT

(Read Instructions on Reverse Before Completing)
Dollar Amounts Shown in Thousands

3. Particulars	(A) Interstate Access		(B) Common Line		(C) Special Access	
	Current Quarter	Cumulative	Current Quarter	Cumulative	Current Quarter	Cumulative
1. Total Revenues	N/A	$ 3,093,452	N/A	$1,390,475	N/A	$110,689
2. Total Expenses and Taxes	N/A	$ 2,605,821	N/A	$ 1,139,241	N/A	$ 93,495
3. Oper. Inc. (Net Return) (1-2)	N/A	$ 487,631	N/A	$ 251,234	N/A	$ 17,194
4. Rate Base-(Avg. Net Invest.)	N/A	$ 1,951,030	N/A	$1,040,336	N/A	$ 67,760
5. Rate of Return (¾) Annualized	N/A	12.50%	N/A	12.07%	N/A	12.69%
6. FCC Ordered Refund-Amortized for Current Period (see Instr. I)	N/A	$ 0	N/A	$ 0	N/A	$ 0
7. Net Return (incl. effect of FCC Order Refund) (3+6)	N/A	$ 487,631	N/A	$ 251,234	N/A	$ 17,194
8. Rate of Return (incl. effect of FCC Order Refund) (7/4) Annualized	N/A	12.50%	N/A	12.07%	N/A	12.69%

3. Particulars	Switched Traffic Sensitive		Traffic Sensitive Total	
	Current Quarter	Cumulative	Current Quarter	Cumulative
1. Total Revenues	N/A	$ 1,592,288	N/A	$1,702,977
2. Total Expenses and Taxes	N/A	$ 1,373,085	N/A	$1,466,581
3. Oper. Inc. (Net Return) (1-2)	N/A	$ 219,203	N/A	$ 236,397
4. Rate Base-(Avg. Net Invest.)	N/A	$ 842,934	N/A	$ 910,694
5. Rate of Return (¾) Annualized	N/A	13.00%	N/A	12.98%
6. FCC Ordered Refund-Amortized for Current Period (see Instr. I)	N/A	$ 0	N/A	$ 0
7. Net Return (incl. effect of FCC Order Refund) (3+6)	N/A	$ 219,203	N/A	$ 236,397
8. Rate of Return (incl. effect of FCC Order Refund) (7/4) Annualized	N/A	13.00%	N/A	12.98%

4. Rates of Return for the Switched Traffic Sensitive Category

(a) Current Quarter	(b) Cumulative
N/A	13.00%

5. Multiplicative Factor Used for Annualizing Rate of Return for Cumulative Measurement Period ▸ 0.50

6. Total Out-of-Period Adjustment (see instruction L) ▸ $ 0

Certification: I certify that I am the chief financial officer or the duly assigned accounting officer: that I have examined the foregoing report; that to the best of my knowledge, information, and belief, all statements of fact contained in this report are true and this report is a correct statement of the business and affairs of the above-named respondent in respect to each and every matter set forth therein during the specified period.

Date	Typed Name of Person Signing	Title of Person Signing	Signature
9/29/95	John A. Greig	Vice President and Chief Financial Officer	John A. Greig

WILLFUL FALSE STATEMENTS MADE ON THIS FORM ARE PUNISHABLE BY FINE AND/OR IMPRISONMENT (U.S. CODE, TITLE 18, Section 1001), AND/OR REVOCATION OF ANY STATION LICENSE OR CONSTRUCTION PERMIT (U.S. CODE, TITLE 47, Section 312(a)(1)), AND/OR FORFEITURE (U.S. CODE, TITLE 47, Section 503).

National Exchange Carrier Association, Inc.
100 South Jefferson Road
Whippany, NJ 07981

Cumulative Period Covered
from: 01/93 to 12/94

NECA Tariff Participants Form 492
Additional Statements

Pursuant to Section 65.600 of the Commission's Rules, NECA is submitting cumulative period Rate of Return information for the Common Line and Traffic Sensitive categories for the period January 1993 through December 1994, as of the August 1995 settlement view.

All of the individual line items on Form 492 include estimates and are subject to further adjustments, as Exchange Carriers revise data. The amounts in this report require the following additional explanations:

1) Tweny-four companies converted from average schedule settlements to cost-based settlements during the monitoring period. These conversions affect the levels of expenses and investment associated with the Common Line and Traffic Sensitive pools during the monitoring period.

2) The 1992 Modification of Average Schedules was effective beginning July 1, 1992 through June 30, 1993. The 1993 modification of average schedules was effective beginning July 1, 1993 through June 30, 1994. The 1994 modification of average schedules was effective July 1, 1994 through June 30, 1995. These formulas are the basis for total payments to average schedule companies in the current period which are included, along with Category I.B and I.C NECA administrative expenses, in line 2 of NECA's Form 492.

3) Some cost company reported expenses and investments included in NECA's FCC 492 report are based upon estimated data. Historically, expense and investment levels increase as companies begin reporting actual data. Considering this, it is expected that the rates of return reported on NECA's Form 492 report will decline as the companies update their studies.

4) The effects of Commission decisions and rulings may result in further adjustments as Exchange Carriers revise data reported to NECA.

5) The report includes cumulative period rate of return data reported to NECA for 1,164 study areas that have participated in both NECA's carrier common line and traffic sensitive tariffs throughout the monitoring period. Actual cost and average schedule settlements information is used for the study areas in the report. Revenues for these study areas are derived using the pool realized rate of return. The Total Interstate Access columns consist of data summed from the Common Line and Traffic Sensitive categories. Exchange carriers not included in NECA's Form 492 filed an interstate access tariff during the monitoring period and file their own Form 492 pursuant to Commission rules.

Stamp copy

NECA NATIONAL EXCHANGE CARRIER ASSOCIATION

100 South Jefferson Road
Whippany, New Jersey 07981
201 884-8070

NECA LIBRARY COPY
DISREGARD IF NOT RED

1997 SEP 31 A 10: 49

James W. Frame
Executive Director
Rates, Costs & Average Schedules

September 30, 1997

RECEIVED

SEP 30 1997

FEDERAL COMMUNICATIONS COMMISSION
OFFICE OF THE SECRETARY

Federal Communications Commission
1919 M Street, NW
Washington, DC 20554

ATTENTION: **Common Carrier Bureau**

SUBJECT: **Rate of Return Report, Form FCC 492**

To Whom it May Concern:

Attached please find, in accordance with Part 65.600 of the Commission's Rules, two copies of Form FCC 492, Rate of Return Report covering the cumulative period from January 1, 1995 through December 31, 1996 for the common line and traffic sensitive pools administered by NECA.

If there are any questions regarding this, please call me.

Sincerely,

James W. Frame

JWF/jhk

Enclosures

FEDERAL COMMUNICATIONS COMMISSION
Washington, DC 20554

1. Name and Address of Reporting Company	2. Reporting Period
National Exchange Carrier Association 100 South Jefferson Road Whippany, NJ 07981	(a) Quarterly Period Covered: From: To: (b) Cumulative Period Covered: From: 01/95 To: 12/96

FCC 492
Common Line Pool

RATE OF RETURN REPORT
(Read Instructions on Reverse Before Completing)
Dollar Amounts Shown in Thousands

3. Particulars	Common Line	
	Current Quarter	Cumulative
1. Total Revenues	N/A	$2,026,630
2. Total Expenses and Taxes	N/A	$1,670,325
3. Oper. Inc. (Net Return)(1-2)	N/A	$356,305
4. Rate Base-(Avg. Net Invest.)	N/A	$1,651,946
5. Rate of Return (3/4) Annualized	N/A	10.78%
6. FCC Ordered Refund - Amortized for Current Period (see Instr. I)	N/A	$0
7. Net Return (incl. effect of FCC Order Refund) (3+6)	N/A	$356,305
8. Rate of Return (incl. effect of FCC Order Refund) (7/4) Annualized	N/A	10.78%

4. Multiplicative Factor Used for Annualizing Rate Of Return for Cumulative Measurement Period	0.5000
5. Total Out-of-Period Adjustment (See Instr. L)	$0

6. Certification: I certify that I am the chief financial officer or the duly assigned accounting officer; that I have examined the foregoing report; that to the best of my knowledge, information, and belief, all statements of fact contained in this report are true and this report is a correct statement of the business and affairs of the above-named respondent in respect to each and every matter set forth therein during the specified period.

Date	Typed Name of Person Signing	Title of Person Signing	Signature
9/30/97	Ronald E. Cook	Executive Director, Finance & Planning	RE Cook

WILLFUL FALSE STATEMENTS MADE ON THIS FORM ARE PUNISHABLE BY FINE AND/OR IMPRISONMENT (U.S. CODE, TITLE 18, Section 1001), AND/OR REVOCATION OF ANY STATION LICENSE OR CONSTRUCTION PERMIT (U.S. CODE, TITLE 47, Section 312(a)(1)), AND/OR FORFEITURE (U.S. CODE, TITLE 47, Section 503).

National Exchange Carrier Association, Inc.
100 South Jefferson Road
Whippany, NJ 07981

Quarterly Period Covered
from: N/A
Cumulative Period Covered
from: 01/95 to 12/96

Common Line Pool Form 492
Additional Statements

Pursuant to Section 65.600 of the Commission's Rules and the Commission's Order FCC 97-83 released March 12, 1997, NECA is submitting cumulative period Rate of Return information for the Common Line Pool for the period January 1995 through December 1996, as of the August 1997 settlement view.

All of the individual line items on Form 492 include estimates and are subject to further adjustments, as Exchange Carriers revise data. The amounts in this report require the following additional explanations:

1) This Common Line-only pool report supplements data contained in NECA's combined Common Line/Traffic Sensitive pool Form 492 Report. Common Line data contained herein is duplicative of the data contained in NECA's combined report and the combined reports of individual exchange carriers that participate in NECA's Common Line pool but not its Traffic Sensitive pool.

2) Eighteen companies converted from average schedule settlements to cost-based settlements during the cumulative period. These conversions affect the levels of expenses and investment associated with the Common Line Pool during the reporting periods.

3) The 1994 Modification of Average Schedules was effective beginning July 1, 1994, the 1995 Modification of Average Schedules was effective July 1, 1995 and the 1996 Modification of Average Schedules was effective July 1, 1996. These formulas are the basis for total payments to average schedule companies in the current period which are included, along with Category I.B NECA administrative expenses, in line 2 of NECA's Form 492.

4) Some cost company reported expenses and investments included in NECA's FCC 492 report are based upon estimated data. Historically, expense and investment levels increase as companies begin reporting actual data. Considering this, it is expected that the rates of return reported on NECA's Form 492 report will decline as the companies update their studies.

5) The report revises pool settlements data as directed in the Commission's Order FCC 97-83 released on March 12, 1997. The revisions are based on the following:

(1) companies that reach a 25% SPF remain at that level in future studies; (2) companies involved in a merger or acquisition use a 25% SPF beginning on the effective date of the transaction; (3) companies with a frozen SPF below 65% complete the transition to 25% by 1993; and (4) companies with a frozen SPF above 65% complete the transition by 1997.

6) The report includes cumulative period rate of return data reported to NECA for 1264 study areas that participated in NECA's Carrier Common Line tariffs throughout the monitoring period. Actual cost and average schedule settlements information is used for the study areas in the report. Revenues for these study areas are derived using the pool realized rate of return.

Approved by OMB 3060-0355
Expires 4/30/95

Washington, D.C. 20554

1. Name and Address of Reporting Company

National Exchange Carrier Association
100 South Jefferson Road
Whippany, NJ 07981

2. Reporting Period
(a) Quarterly Period Covered
From: To:
(b) Cumulative Period Covered:
From: 01/95 To: 12/96

FCC 492
NECA Tariff Participants

RATE OF RETURN REPORT

(Read Instructions on Reverse Before Completing)

Dollar Amounts Shown in Thousands

3. Particulars	(A) Interstate Access		(B) Common Line		(C) Special Access	
	Current Quarter	Cumulative	Current Quarter	Cumulative	Current Quarter	Cumulative
1. Total Revenues	N/A	$2,793,603	N/A	$1,174,242	N/A	$99,167
2. Total Expenses and Taxes	N/A	$2,428,426	N/A	$999,456	N/A	$86,431
3. Oper. Inc. (Net Return) (1-2)	N/A	$365,177	N/A	$174,786	N/A	$12,736
4. Rate Base-(Avg. Net Invest.)	N/A	$1,593,061	N/A	$810,125	N/A	$55,788
5. Rate of Return (¾) Annualized	N/A	11.46%	N/A	10.79%	N/A	11.41%
6. FCC Ordered Refund-Amortized for Current Period (see Instr. I)	N/A	$0	N/A	$0	N/A	$0
7. Net Return (incl. effect of FCC Order Refund) (3+6)	N/A	$365,177	N/A	$174,786	N/A	$12,737
8. Rate of Return (incl. effect of FCC Order Refund) (7/4) Annualized	N/A	11.46%	N/A	10.79%	N/A	11.41%

3. Particulars	Switched Traffic		Traffic Sensitive Total	
	Current Quarter	Cumulative	Current Quarter	Cumulative
1. Total Revenues	N/A	$1,520,194	N/A	$1,619,361
2. Total Expenses and Taxes	N/A	$1,342,539	N/A	$1,428,970
3. Oper. Inc. (Net Return) (1-2)	N/A	$177,655	N/A	$190,391
4. Rate Base-(Avg. Net Invest.)	N/A	$727,148	N/A	$782,936
5. Rate of Return (¾) Annualized	N/A	12.22%	N/A	12.16%
6. FCC Ordered Refund-Amortized for Current Period (see Instr. I)	N/A	$0	N/A	$0
7. Net Return (incl. effect of FCC Order Refund) (3+6)	N/A	$177,655	N/A	$190,391
8. Rate of Return (incl. effect of FCC Order Refund) (7/4) Annualized	N/A	12.22%	N/A	12.16%

4. Rates of Return for the Switched Traffic Sensitive Category	
(a) Current Quarter	(b) Cumulative
N/A	12.22%

5. Multiplicative Factor Used for Annualizing Rate of Return for Cumulative Measurement Period: 0.5000

6. Total Out-of-Period Adjustment (see instruction L): $ 0

7. Certification: I certify that I am the chief financial officer or the duly assigned accounting officer: that I have examined the foregoing report; that to the best of my knowledge, information, and belief, all statements of fact contained in this report are true and this report is a correct statement of the business and affairs of the above-named respondent in respect to each and every matter set forth therein during the specified period.

Date	Typed Name of Person Signing	Title of Person Signing	Signature
9/30/97	Ronald E. Cook	Executive Director, Finance & Planning	R E Cook

WILLFUL FALSE STATEMENTS MADE ON THIS FORM ARE PUNISHABLE BY FINE AND/OR IMPRISONMENT (U.S. CODE, TITLE 18, Section 1001), AND/OR REVOCATION OF ANY STATION LICENSE OR CONSTRUCTION PERMIT (U.S. CODE, TITLE 47, Section 312(a)(1)), AND/OR FORFEITURE (U.S. CODE, TITLE 47, Section 503).

National Exchange Carrier Association, Inc.
100 South Jefferson Road
Whippany, NJ 07981

Quarterly Period Covered
from: N/A
Cumulative Period Covered
from: 01/95 to 12/96

NECA Tariff Participants Form 492
Additional Statements

Pursuant to Section 65.600 of the Commission's Rules and the Commission's Order FCC 97-83 released March 12, 1997, NECA is submitting cumulative period Rate of Return information for the Common Line and Traffic Sensitive categories for the period January 1995 through December 1996, as of the August 1997 settlement view.

All of the individual line items on Form 492 include estimates and are subject to further adjustments, as Exchange Carriers revise data. The amounts in this report require the following additional explanations:

1) Eleven companies converted from average schedule settlements to cost-based settlements during the cumulative period. These conversions affect the levels of expenses and investment associated with the Common Line and Traffic Sensitive pools during the reporting periods.

2) The 1994 Modification of Average Schedules was effective beginning July 1, 1994, the 1995 Modification of Average Schedules was effective July 1, 1995, and the 1996 Modification of Average Schedules was effective July 1, 1996. These formulas are the basis for total payments to average schedule companies in the current period which are included, along with Category I.B and I.C NECA administrative expenses, in line 2 of NECA's Form 492.

3) Some cost company reported expenses and investments included in NECA's FCC 492 report are based upon estimated data. Historically, expense and investment levels increase as companies begin reporting actual data. Considering this, it is expected that the rates of return reported on NECA's Form 492 report will decline as the companies update their studies.

4) The report revises pool settlements data as directed in the Commission's Order FCC 97-83 released on March 12, 1997. The revisions are based on the following: (1) companies that reach a 25% SPF remain at that level in future studies; (2) companies involved in a merger or acquisition use a 25% SPF beginning on the effective date of the transaction; (3) companies with a frozen SPF below 65% complete the transition to 25% by 1993; and (4) companies with a frozen SPF above 65% complete the transition by 1997.

5) The report includes cumulative period rate of return data reported to NECA for 1137 study areas that have participated in both NECA's carrier common line and traffic sensitive tariffs throughout the monitoring period. Actual cost and average schedule settlements information is used for the study areas in the report. Revenues for these study areas are derived using the pool realized rate of return. The Total Interstate Access columns consist of data summed from the Common Line and Traffic Sensitive categories. Exchange carriers not included in NECA's Form 492 filed an interstate access tariff during the monitoring period and file their own Form 492 pursuant to Commission rules.

6) NECA reports the Rate of Return as an aggregate for the Traffic Sensitive category for monitoring purposes per Authorized Rates of Return for Interstate Services of AT&T Communications and Exchange Telephone Carriers, CC Docket No. 84-800 Phase I, Memorandum Opinion and Order, FCC 86-14 (released March 24, 1986) at n. 51.

NECA NATIONAL EXCHANGE CARRIER ASSOCIATION

100 South Jefferson Road
Whippany, NJ 07981

Patricia A. Chirico
Executive Director
Tariffs, Rates, Costs & Average Schedules

Voice: 973-884-8087
Fax: 973-884-8469
E-mail: pchiric@neca.org

RECEIVED
SEP 29 1999
FCC MAIL ROOM

September 30, 1999

Ms. Katie Rangos
Industry Analysis Division
Federal Communications Commission
445 12th Street S.W.
Washington, D.C. 20554

ATTENTION: Common Carrier Bureau

SUBJECT: Rate of Return Report, Form FCC 492

Dear Ms. Rangos:

Attached please find, in accordance with Part 65.600 of the Commission's Rules, the Rate of Return Report covering the cumulative period of January 1, 1997 through December 31, 1998 for the common line and traffic sensitive pools administered by NECA.

If there are any questions regarding the enclosed, please call me.

Sincerely,

P. A. Chirico
by J.A.D.

Enclosures

cc: FCC Secretary
ITS

FEDERAL COMMUNICATIONS COMMISSION
Washington, DC 20554

Approved by OMB 3060-0355
Expires 05/31/98

1. Name and Address of Reporting Company	2. Reporting Period
National Exchange Carrier Association 100 South Jefferson Road Whippany, NJ 07981	(a) Quarterly Period Covered: From: N/A To: N/A (b) Cumulative Period Covered: From: 01/97 To: 12/98

FCC 492
Common Line Pool

RATE OF RETURN REPORT
(Read Instructions on Reverse Before Completing)
Dollar Amounts Shown in Thousands

3. Particulars	Common Line	
	Current Quarter	Cumulative
1. Total Revenues	N/A	$2,393,038
2. Total Expenses and Taxes	N/A	$1,971,806
3. Oper. Inc. (Net Return)(1-2)	N/A	$421,232
4. Rate Base-(Avg. Net Invest.)	N/A	$1,863,457
5. Rate of Return (3/4) Annualized	N/A	11.30%
6. FCC Ordered Refund - Amortized for Current Period (see Instr. I)	N/A	$0
7. Net Return (incl. effect of FCC Order Refund) (3+6)	N/A	$421,232
8. Rate of Return (incl. effect of FCC Order Refund) (7/4) Annualized	N/A	11.30%

4. Multiplicative Factor Used for Annualizing Rate Of Return for Cumulative Measurement Period	0.5000
5. Total Out-of-Period Adjustment (See Instr. L)	$0

6. Certification: I certify that I am the chief financial officer or the duly assigned accounting officer; that I have examined the foregoing report; that to the best of my knowledge, information, and belief, all statements of fact contained in this report are true and this report is a correct statement of the business and affairs of the above-named respondent in respect to each and every matter set forth therein during the specified period.

Date	Typed Name of Person Signing	Title of Person Signing	Signature
9/30/99	Ronald E. Cook	Vice President, Finance & Administration	R E Cook

WILLFUL FALSE STATEMENTS MADE ON THIS FORM ARE PUNISHABLE BY FINE AND/OR IMPRISONMENT (U.S. CODE, TITLE 18, Section 1001), AND/OR REVOCATION OF ANY STATION LICENSE OR CONSTRUCTION PERMIT (U.S. CODE, TITLE 47, Section 312(a)(1)), AND/OR FORFEITURE (U.S. CODE, TITLE 47, Section 503).

National Exchange Carrier Association, Inc.
100 South Jefferson Road
Whippany, NJ 07981

Quarterly Period Covered
from: N/A
Cumulative Period Covered
from: 01/97 to 12/98

Common Line Pool Form 492
Additional Statements

Pursuant to Section 65.600 of the Commission's Rules, NECA is submitting cumulative period Rate of Return information for the Common Line Pool for the period January 1997 through December 1998, as of the August 1999 settlement view.

All of the individual line items on Form 492 include estimates and are subject to further adjustments, as Exchange Carriers revise data. The amounts in this report require the following additional explanations:

1) This Common Line-only pool report supplements data contained in NECA's combined Common Line/Traffic Sensitive pool Form 492 Report. Common Line data contained herein is duplicative of the data contained in NECA's combined report and the combined reports of individual exchange carriers that participate in NECA's Common Line pool but not its Traffic Sensitive pool.

2) Twenty-one companies converted from average schedule settlements to cost-based settlements during the cumulative period. These conversions affect the levels of expenses and investment associated with the Common Line Pool during the reporting periods.

3) The 1996 Modification of Average Schedules was effective beginning July 1, 1996, and the 1997 Modification of Average Schedules was effective July 1, 1997. These formulas are the basis for total payments to average schedule companies in the current period which are included, along with Category I.B NECA administrative expenses, in line 2 of NECA's Form 492.

4) Some cost company reported expenses and investments included in NECA's FCC 492 report are based upon estimated data. Historically, expense and investment levels increase as companies begin reporting actual data. Considering this, it is expected that the rates of return reported on NECA's Form 492 report will decline as the companies update their studies.

5) The report includes cumulative period rate of return data reported to NECA for 1251 study areas that participated in NECA's Carrier Common Line tariffs throughout the monitoring period. Actual cost and average schedule settlements information is used for the study areas in the report. Revenues for these study areas are derived using the pool realized rate of return.

FEDERAL COMMUNICATIONS COMMISSION
Washington, D.C. 20554

Approved by OMB 3060-0355
Expires 05/31/98

1. Name and Address of Reporting Company

National Exchange Carrier Association
100 South Jefferson Road
Whippany, NJ 07981

2. Reporting Period
(a) Quarterly Period Covered
From: N/A To: N/A
(b) Cumulative Period Covered:
From: 01/97 To: 12/98

FCC 492
NECA Tariff Participants

RATE OF RETURN REPORT
(Read Instructions on Reverse Before Completing)
Dollar Amounts Shown in Thousands

3. Particulars	(A) Interstate Access		(B) Common Line		(C) Special Access	
	Current Quarter	Cumulative	Current Quarter	Cumulative	Current Quarter	Cumulative
1. Total Revenues	N/A	$3,381,741	N/A	$1,286,991	N/A	$134,297
2. Total Expenses and Taxes	N/A	$2,965,912	N/A	$1,092,704	N/A	$118,425
3. Oper. Inc. (Net Return) (1-2)	N/A	$415,829	N/A	$194,287	N/A	$15,872
4. Rate Base-(Avg. Net Invest.)	N/A	$1,692,781	N/A	$858,625	N/A	$81,934
5. Rate of Return (¾) Annualized	N/A	12.28%	N/A	11.31%	N/A	9.69%
6. FCC Ordered Refund-Amortized for Current Period (see Instr. I)	N/A	$0	N/A	$0	N/A	$0
7. Net Return (incl. effect of FCC Order Refund) (3+6)	N/A	$415,829	N/A	$194,287	N/A	$15,872
8. Rate of Return (incl. effect of FCC Order Refund) (7/4) Annualized	N/A	12.28%	N/A	11.31%	N/A	9.69%

Particulars	Switched Traffic		Traffic Sensitive Total	
	Current Quarter	Cumulative	Current Quarter	Cumulative
1. Total Revenues	N/A	$1,960,453	N/A	$2,094,750
2. Total Expenses and Taxes	N/A	$1,754,783	N/A	$1,873,208
3. Oper. Inc. (Net Return) (1-2)	N/A	$205,706	N/A	$221,578
4. Rate Base-(Avg. Net Invest.)	N/A	$752,222	N/A	$834,156
5. Rate of Return (¾) Annualized	N/A	13.67%	N/A	13.28%
6. FCC Ordered Refund-Amortized for Current Period (see Instr. I)	N/A	$0	N/A	$0
7. Net Return (incl. effect of FCC Order Refund) (3+6)	N/A	$205,706	N/A	$221,578
8. Rate of Return (incl. effect of FCC Order Refund) (7/4) Annualized	N/A	13.67%	N/A	13.28%

4. Rates of Return for the Switched Traffic Sensitive Category

(a) Current Quarter	(b) Cumulative
N/A	13.67%

5. Multiplicative Factor Used for Annualizing Rate of Return for Cumulative Measurement Period 0.5000

6. Total Out-of-Period Adjustment (see instruction L) $ 0

7. Certification: I certify that I am the chief financial officer or the duly assigned accounting officer: that I have examined the foregoing report; that to the best of my knowledge, information, and belief, all statements of fact contained in this report are true and this report is a correct statement of the business and affairs of the above-named respondent in respect to each and every matter set forth therein during the specified period.

Date	Typed Name of Person Signing	Title of Person Signing	Signature
9/30/99	Ronald E. Cook	Vice President, Finance & Administration	

WILLFUL FALSE STATEMENTS MADE ON THIS FORM ARE PUNISHABLE BY FINE AND/OR IMPRISONMENT (U.S. CODE, TITLE 18, Section 1001), AND/OR REVOCATION OF ANY STATION LICENSE OR CONSTRUCTION PERMIT (U.S. CODE, TITLE 47, Section 312(a)(1)), AND/OR FORFEITURE (U.S. CODE, TITLE 47, Section 503).

National Exchange Carrier Association, Inc.
100 South Jefferson Road
Whippany, NJ 07981

Quarterly Period Covered
from: N/A
Cumulative Period Covered
from: 01/97 to 12/98

NECA Tariff Participants Form 492
Additional Statements

Pursuant to Section 65.600 of the Commission's Rules, NECA is submitting cumulative period Rate of Return information for the Common Line and Traffic Sensitive categories for the period January 1997 through December 1998, as of the August 1999 settlement view.

All of the individual line items on Form 492 include estimates and are subject to further adjustments, as Exchange Carriers revise data. The amounts in this report require the following additional explanations:

1) Fourteen companies converted from average schedule settlements to cost-based settlements during the cumulative period. These conversions affect the levels of expenses and investment associated with the Common Line and Traffic Sensitive pools during the reporting periods.

2) The 1996 Modification of Average Schedules was effective beginning July 1, 1996, and the 1997 Modification of Average Schedules was effective July 1, 1997. These formulas are the basis for total payments to average schedule companies in the current period which are included, along with Category I.B and I.C NECA administrative expenses, in line 2 of NECA's Form 492.

3) Some cost company reported expenses and investments included in NECA's FCC 492 report are based upon estimated data. Historically, expense and investment levels increase as companies begin reporting actual data. Considering this, it is expected that the rates of return reported on NECA's Form 492 report will decline as the companies update their studies.

4) The report includes cumulative period rate of return data reported to NECA for 1088 study areas that have participated in both NECA's carrier common line and traffic sensitive tariffs throughout the monitoring period. Actual cost and average schedule settlements information is used for the study areas in the report. Revenues for these study areas are derived using the pool realized rate of return. The Total Interstate Access columns consist of data summed from the Common Line and Traffic Sensitive categories. Exchange carriers not included in NECA's Form 492 filed an interstate access tariff during the monitoring period and file their own Form 492 pursuant to Commission rules.

5) NECA reports the Rate of Return as an aggregate for the Traffic Sensitive category for monitoring purposes per Authorized Rates of Return for Interstate Services of AT&T Communications and Exchange Telephone Carriers, CC Docket No. 84-800 Phase I, Memorandum Opinion and Order, FCC 86-14 (released March 24, 1986) at n. 51.

6) Proper recognition of the interstate nature of Internet traffic would significantly reduce the traffic sensitive pool rate of return.

NECA NATIONAL EXCHANGE CARRIER ASSOCIATION INC

80 South Jefferson Road
Whippany, NJ 07981

Patricia A. Chirico
Executive Director
Tariffs, Rates, Costs & Average Schedules

Voice: 973-884-8087
Fax: 973-884-8469
E-mail: pchiric@neca.org

S+R

September 28, 2001

RECEIVED
SEP 28 2001
FEDERAL COMMUNICATIONS COMMISSION
OFFICE OF THE SECRETARY

Ms. Katie Rangos
Federal Communications Commission
Industry Analysis Division
445 12th Street, SW
Washington, DC 20554

Katie Rangos
9/28/01

ATTENTION: Common Carrier Bureau

SUBJECT: Rate of Return Report, Form FCC 492

Dear Ms. Rangos:

Attached please find, in accordance with Part 65.600 of the Commission's Rules, the Rate of Return Report covering the cumulative period of January 1, 1999 through December 31, 2000 for common line and traffic sensitive pools administered by NECA.

If there are any questions regarding the enclosed, please call me.

Sincerely,

P. A. Chirico

Enclosures

cc: FCC Secretary
ITS

FEDERAL COMMUNICATIONS COMMISSION
Washington, DC 20554

Approved by OMB 3060-0355
Form as of 09/15/2001

Name and Address of Reporting Company	2. Reporting Period
National Exchange Carrier Association 80 South Jefferson Road Whippany, NJ 07981	(a) Quarterly Period Covered: From: N/A To: N/A (b) Cumulative Period Covered: From: 01/99 To: 12/00

FCC 492
Common Line Pool

RATE OF RETURN REPORT
(Read Instructions on Reverse Before Completing)
Dollar Amounts Shown in Thousands

3. Particulars	Common Line	
	Current Quarter	Cumulative
1. Total Revenues	N/A	$2,756,182
2. Total Expenses and Taxes	N/A	$2,296,125
3. Oper. Inc. (Net Return)(1-2)	N/A	$460,057
4. Rate Base-(Avg. Net Invest.)	N/A	$2,010,450
5. Rate of Return (3/4) Annualized	N/A	11.44%
6. FCC Ordered Refund - Amortized for Current Period (see Instr. I)	N/A	$0
Net Return (incl. effect of FCC Order Refund) (3+6)	N/A	$460,057
8. Rate of Return (incl. effect of FCC Order Refund) (7/4) Annualized	N/A	11.44%

4. Multiplicative Factor Used for Annualizing Rate Of Return for Cumulative Measurement Period	0.5000
5. Total Out-of-Period Adjustment (See Instr. L)	$0

6. Certification: I certify that I am the chief financial officer or the duly assigned accounting officer; that I have examined the foregoing report; that to the best of my knowledge, information, and belief, all statements of fact contained in this report are true and this report is a correct statement of the business and affairs of the above-named respondent in respect to each and every matter set forth therein during the specified period.

Date	Typed Name of Person Signing	Title of Person Signing	Signature
09/28/2001	Ronald E. Cook	Vice President, Finance & Planning	

WILLFUL FALSE STATEMENTS MADE ON THIS FORM ARE PUNISHABLE BY FINE AND/OR IMPRISONMENT (U.S. CODE, TITLE 18, Section 1001), AND/OR REVOCATION OF ANY STATION LICENSE OR CONSTRUCTION PERMIT (U.S. CODE, TITLE 47, Section 312(a)(1)), AND/OR FORFEITURE (U.S. CODE, TITLE 47, Section 503).

National Exchange Carrier Association, Inc.
100 South Jefferson Road
Whippany, NJ 07981

Quarterly Period Covered
from: N/A
Cumulative Period Covered
from: 01/99 to 12/00

Common Line Pool Form 492
Additional Statements

Pursuant to Section 65.600 of the Commission's Rules, NECA is submitting cumulative period Rate of Return information for the Common Line Pool for the period January 1999 through December 2000, as of the August 2001 settlement view.

All of the individual line items on Form 492 include estimates and are subject to further adjustments, as Exchange Carriers revise data. The amounts in this report require the following additional explanations:

1) This Common Line-only pool report supplements data contained in NECA's combined Common Line/Traffic Sensitive pool Form 492 Report. Common Line data contained herein is duplicative of the data contained in NECA's combined report and the combined reports of individual exchange carriers that participate in NECA's Common Line pool but not its Traffic Sensitive pool.

2) Twenty-six companies converted from average schedule settlements to cost-based settlements during the cumulative period. These conversions affect the levels of expenses and investment associated with the Common Line Pool during the reporting periods.

3) The 1998 Modification of Average Schedules was effective beginning July 1, 1998, the 1999 Modification of Average Schedules was effective July 1, 1999, and the 2000 Modification of Average Schedules was effective July 1, 2000. These formulas are the basis for total payments to average schedule companies in the current period that are included, along with Category I.B NECA administrative expenses, in line 2 of NECA's Form 492.

4) Some cost company reported expenses and investments included in NECA's FCC 492 report are based upon estimated data. Historically, expense and investment levels increase as companies begin reporting actual data. Considering this, it is expected that the rates of return reported on NECA's Form 492 report will decline as the companies update their studies.

5) The report includes cumulative period rate of return data reported to NECA for 1250 study areas that participated in NECA's Carrier Common Line tariffs throughout the monitoring period or entered the Common Line Pool within the first sixteen months of the monitoring period and elected for NECA to file their data for the months during the monitoring period they were in the pool. Actual cost and average schedule settlements information is used for the study areas in the report. Revenues for these study areas are derived using the pool realized rate of return.

FEDERAL COMMUNICATIONS COMMISSION
Washington, D.C. 20554

Approved by OMB 3060-0355
Form as of 09/15/2001

1. Name and Address of Reporting Company

National Exchange Carrier Association
80 South Jefferson Road
Whippany, NJ 07981

2. Reporting Period
(a) Quarterly Period Covered
N/A N/A
(b) Cumulative Period Covered:
01/99 12/00

FCC 492
NECA Tariff Participants

RATE OF RETURN REPORT
(Read Instructions on Reverse Before Completing)
Dollar Amounts Shown in Thousands

3. Particulars	(A) Interstate Access		(B) Common Line		(C) Special Access	
	Current Quarter	Cumulative	Current Quarter	Cumulative	Current Quarter	Cumulative
1. Total Revenues	N/A	$3,359,924	N/A	$1,494,509	N/A	$224,628
2. Total Expenses and Taxes	N/A	$2,907,827	N/A	$1,262,940	N/A	$194,250
3. Oper. Inc. (Net Return) (1-2)	N/A	$452,097	N/A	$231,569	N/A	$30,378
4. Rate Base-(Avg. Net Invest.)	N/A	$1,914,803	N/A	$1,011,957	N/A	$132,316
5. Rate of Return (¾) Annualized	N/A	11.81%	N/A	11.44%	N/A	11.48%
6. FCC Ordered Refund-Amortized for Current Period (see Instr. I)	N/A	$0	N/A	$0	N/A	$0
7. Net Return (incl. effect of FCC Order Refund) (3+6)	N/A	$452,097	N/A	$231,569	N/A	$30,378
8. Rate of Return (incl. effect of FCC Order Refund) (7/4) Annualized	N/A	11.81%	N/A	11.44%	N/A	11.48%

3. Particulars	Switched Traffic		Traffic Sensitive Total	
	Current Quarter	Cumulative	Current Quarter	Cumulative
1. Total Revenues	N/A	$1,640,787	N/A	$1,865,415
2. Total Expenses and Taxes	N/A	$1,450,637	N/A	$1,644,887
3. Oper. Inc. (Net Return) (1-2)	N/A	$190,150	N/A	$220,528
4. Rate Base-(Avg. Net Invest.)	N/A	$770,530	N/A	$902,846
5. Rate of Return (¾) Annualized	N/A	12.34%	N/A	12.21%
6. FCC Ordered Refund-Amortized for Current Period (see Instr. I)	N/A	$0	N/A	$0
7. Net Return (incl. effect of FCC Order Refund) (3+6)	N/A	$190,150	N/A	$220,528
8. Rate of Return (incl. effect of FCC Order Refund) (7/4) Annualized	N/A	12.34%	N/A	12.21%

4. Rates of Return for the Switched Traffic Sensitive Category	
(a) Current Quarter	(b) Cumulative
N/A	12.34%

5. Multiplicative Factor Used for Annualizing Rate of Return for Cumulative Measurement Period 0.5000

6. Total Out-of-Period Adjustment (see instruction L) $ 0

7. Certification: I certify that I am the chief financial officer or the duly assigned accounting officer: that I have examined the foregoing report; that to the best of my knowledge, information, and belief, all statements of fact contained in this report are true and this report is a correct statement of the business and affairs of the above-named respondent in respect to each and every matter set forth therein during the specified period.

Date	Typed Name of Person Signing	Title of Person Signing	Signature
09/28/2001	Ronald E. Cook	Vice President, Finance & Planning	

WILLFUL FALSE STATEMENTS MADE ON THIS FORM ARE PUNISHABLE BY FINE AND/OR IMPRISONMENT (U.S. CODE, TITLE 18, Section 1001), AND/OR REVOCATION OF ANY STATION LICENSE OR CONSTRUCTION PERMIT (U.S. CODE, TITLE 47, Section 312(a)(1)), AND/OR FORFEITURE (U.S. CODE, TITLE 47, Section 503).

National Exchange Carrier Association, Inc.
100 South Jefferson Road
Whippany, NJ 07981

Quarterly Period Covered
from: N/A
Cumulative Period Covered
from: 01/99 to 12/00

NECA Tariff Participants Form 492
Additional Statements

Pursuant to Section 65.600 of the Commission's Rules, NECA is submitting cumulative period Rate of Return information for the Common Line and Traffic Sensitive categories for the period January 1999 through December 2000, as of the August 2001 settlement view.

All of the individual line items on Form 492 include estimates and are subject to further adjustments, as Exchange Carriers revise data. The amounts in this report require the following additional explanations:

1) Twenty-four companies in the Traffic Sensitive Pool converted from average schedule settlements to cost-based settlements during the cumulative period. These conversions affect the levels of expenses and investment associated with the Common Line and Traffic Sensitive pools during the reporting periods.

2) The 1998 Modification of Average Schedules was effective beginning July 1, 1998, the 1999 Modification of Average Schedules was effective July 1, 1999, and the 2000 Modification of Average Schedules was effective July 1, 2000. These formulas are the basis for total payments to average schedule companies in the current period that are included, along with Category I.B and I.C NECA administrative expenses, in line 2 of NECA's Form 492.

3) Some cost company reported expenses and investments included in NECA's FCC 492 report are based upon estimated data. Historically, expense and investment levels increase as companies begin reporting actual data. Considering this, it is expected that the rates of return reported on NECA's Form 492 report will decline as the companies update their studies.

4) The report includes cumulative period rate of return data reported to NECA for 1078 study areas that have participated in both NECA's carrier common line and traffic sensitive tariffs throughout the monitoring period or entered the Common Line Pool and Traffic Sensitive Pools within the first sixteen months of the monitoring period and elected for NECA to file their data for the months during the monitoring period they were in the pool. Actual cost and average schedule settlements information is used for the study areas in the report. Revenues for these study areas are derived using the pool realized rate of return. The Total Interstate Access columns consist of data summed from the Common Line and Traffic Sensitive categories. Exchange carriers not included in NECA's Form 492 filed an interstate access tariff during the monitoring period and file their own Form 492 pursuant to Commission rules.

5) NECA reports the Rate of Return as an aggregate for the Traffic Sensitive category for monitoring purposes per Authorized Rates of Return for Interstate Services of AT&T Communications and Exchange Telephone Carriers, CC Docket No. 84-800 Phase I, Memorandum Opinion and Order, FCC 86-14 (released March 24, 1986) at n. 51.

Eigm

NECA
80 South Jefferson Road ▪ Whippany, NJ 07981

Patricia A. Chirico
Executive Director
Tariffs, Rates, Costs & Average Schedules

Voice: 973-884-8087
Fax: 973-884-8469
E-mail: pchirico@neca.org

September 30, 2003

Ms. Katie Rangos
Federal Communications Commission
Industry Analysis & Technology Division
445 12th Street, SW
Washington, DC 20554

ATTENTION: Wire Line Competition Bureau

SUBJECT: Rate of Return Report, Form FCC 492

Dear Ms. Rangos:

Attached please find, in accordance with Part 65.600 of the Commission's Rules, the Rate of Return Report covering the cumulative period of January 1, 2001 through December 31, 2002 for common line and traffic sensitive pools administered by NECA.

If there are any questions regarding the enclosed, please call me.

Sincerely,

P. A. Chirico

Enclosures

cc: FCC Secretary
Qualex

Katie Rangos
9/30/03

FEDERAL COMMUNICATIONS COMMISSION
Washington, DC 20554

Approved by OMB 3060-0355
Expires 05/31/98

1. Name and Address of Reporting Company	2. Reporting Period
National Exchange Carrier Association 80 South Jefferson Road Whippany, NJ 07981	(a) Quarterly Period Covered: From: N/A To: N/A (b) Cumulative Period Covered: From: 01/01 To: 12/02

FCC 492
Common Line Pool

RATE OF RETURN REPORT
(Read Instructions on Reverse Before Completing)
Dollar Amounts Shown in Thousands

3. Particulars	Common Line	
	Current Quarter	Cumulative
1. Total Revenues	N/A	$3,425,600
2. Total Expenses and Taxes	N/A	$2,879,536
3. Oper. Inc. (Net Return)(1-2)	N/A	$546,064
4. Rate Base-(Avg. Net Invest.)	N/A	$2,265,866
5. Rate of Return (3/4) Annualized	N/A	12.05%
6. FCC Ordered Refund - Amortized for Current Period (see Instr. I)	N/A	$0
7. Net Return (incl. effect of FCC Order Refund) (3+6)	N/A	$546,064
8. Rate of Return (incl. effect of FCC Order Refund) (7/4) Annualized	N/A	12.05%

4. Multiplicative Factor Used for Annualizing Rate Of Return for Cumulative Measurement Period	0.5000
5. Total Out-of-Period Adjustment (See Instr. L)	$0

6. Certification: I certify that I am the chief financial officer or the duly assigned accounting officer; that I have examined the foregoing report; that to the best of my knowledge, information, and belief, all statements of fact contained in this report are true and this report is a correct statement of the business and affairs of the above-named respondent in respect to each and every matter set forth therein during the specified period.

Date	Typed Name of Person Signing	Title of Person Signing	Signature
09/30/2003	Ronald E. Cook	Vice President, Finance & Administration	

WILLFUL FALSE STATEMENTS MADE ON THIS FORM ARE PUNISHABLE BY FINE AND/OR IMPRISONMENT (U.S. CODE, TITLE 18, Section 1001), AND/OR REVOCATION OF ANY STATION LICENSE OR CONSTRUCTION PERMIT (U.S. CODE, TITLE 47, Section 312(a)(1)), AND/OR FORFEITURE (U.S. CODE, TITLE 47, Section 503).

National Exchange Carrier Association, Inc.
80 South Jefferson Road
Whippany, NJ 07981

Quarterly Period Covered
from: N/A
Cumulative Period Covered
from: 01/01 to 12/02

Common Line Pool Form 492
Additional Statements

Pursuant to Section 65.600 of the Commission's Rules, NECA is submitting cumulative period Rate of Return information for the Common Line Pool for the period January 2001 through December 2002, as of the August 2003 settlement view.

All of the individual line items on Form 492 include estimates and are subject to further adjustments, as Exchange Carriers revise data. The amounts in this report require the following additional explanations:

1) This Common Line-only pool report supplements data contained in NECA's combined Common Line/Traffic Sensitive pool Form 492 Report. Common Line data contained herein is duplicative of the data contained in NECA's combined report and the combined reports of individual exchange carriers that participate in NECA's Common Line pool but not its Traffic Sensitive pool.

2) Thirty-eight companies converted from average schedule settlements to cost-based settlements during the cumulative period. These conversions affect the levels of expenses and investment associated with the Common Line Pool during the reporting periods.

3) The 2000 Modification of Average Schedules was effective beginning July 1, 2000, the 2001 Modification of Average Schedules was effective beginning July 1, 2001, and the 2002 Modification of Average Schedules was effective beginning July 1, 2002. These formulas are the basis for total payments to average schedule companies in the current period that is included, along with Category I.B NECA administrative expenses, in line 2 of NECA's Form 492.

4) Some cost company reported expenses and investments included in NECA's FCC 492 report are based upon estimated data. Historically, expense and investment levels increase as companies begin reporting actual data. Considering this, it is expected that the rates of return reported on NECA's Form 492 report will decline as the companies update their studies. Also, Long Term Support and Interstate Common Line Support payments are subject to true-ups pursuant to FCC rules.

5) The report includes cumulative period rate of return data reported to NECA for 1243 study areas that participated in NECA's Carrier Common Line tariffs pursuant to Commission rules. Actual cost and average schedule settlements information is used for the study areas in the report. Revenues for these study areas are derived using the pool realized rate of return.

FEDERAL COMMUNICATIONS COMMISSION
Washington, D.C. 20554

Approved by OMB 3060-0355
Expires 05/31/98

1. Name and Address of Reporting Company

National Exchange Carrier Association
80 South Jefferson Road
Whippany, NJ 07981

2. Reporting Period
(a) Quarterly Period Covered
N/A N/A
(b) Cumulative Period Covered:
01/01 12/02

FCC 492
NECA Tariff Participants

RATE OF RETURN REPORT
(Read Instructions on Reverse Before Completing)
Dollar Amounts Shown in Thousands

3. Particulars	(A) Interstate Access		(B) Common Line		(C) Special Access	
	Current Quarter	Cumulative	Current Quarter	Cumulative	Current Quarter	Cumulative
1. Total Revenues	N/A	$4,158,193	N/A	$2,101,957	N/A	$449,022
2. Total Expenses and Taxes	N/A	$3,558,474	N/A	$1,783,812	N/A	$381,979
3. Oper. Inc. (Net Return) (1-2)	N/A	$599,719	N/A	$318,145	N/A	$67,043
4. Rate Base-(Avg. Net Invest.)	N/A	$2,427,570	N/A	$1,320,125	N/A	$266,729
5. Rate of Return (¾) Annualized	N/A	12.35%	N/A	12.05%	N/A	12.57%
6. FCC Ordered Refund-Amortized for Current Period (see Instr. I)	N/A	$0	N/A	$0	N/A	$0
7. Net Return (incl. effect of FCC Order Refund) (3+6)	N/A	$599,719	N/A	$318,145	N/A	$67,043
8. Rate of Return (incl. effect of FCC Order Refund) (7/4) Annualized	N/A	12.35%	N/A	12.05%	N/A	12.57%

3. Particulars	Switched Traffic		Traffic Sensitive Total	
	Current Quarter	Cumulative	Current Quarter	Cumulative
1. Total Revenues	N/A	$1,607,214	N/A	$2,056,236
2. Total Expenses and Taxes	N/A	$1,392,683	N/A	$1,774,662
3. Oper. Inc. (Net Return) (1-2)	N/A	$214,531	N/A	$281,574
4. Rate Base-(Avg. Net Invest.)	N/A	$840,716	N/A	$1,107,445
5. Rate of Return (¾) Annualized	N/A	12.76%	N/A	12.71%
6. FCC Ordered Refund-Amortized for Current Period (see Instr. I)	N/A	$0	N/A	$0
7. Net Return (incl. effect of FCC Order Refund) (3+6)	N/A	$214,531	N/A	$281,574
8. Rate of Return (incl. effect of FCC Order Refund) (7/4) Annualized	N/A	12.76%	N/A	12.71%

4. Rates of Return for the Switched Traffic Sensitive Category

(a) Current Quarter	(b) Cumulative
N/A	12.76%

5. Multiplicative Factor Used for Annualizing Rate of Return for Cumulative Measurement Period 0.5000

6. Total Out-of-Period Adjustment (see instruction L) $ 0

7. Certification: I certify that I am the chief financial officer or the duly assigned accounting officer: that I have examined the foregoing report; that to the best of my knowledge, information, and belief, all statements of fact contained in this report are true and this report is a correct statement of the business and affairs of the above-named respondent in respect to each and every matter set forth therein during the specified period.

Date	Typed Name of Person Signing	Title of Person Signing	Signature
09/30/2003	Ronald E. Cook	Vice President, Finance & Administration	

WILLFUL FALSE STATEMENTS MADE ON THIS FORM ARE PUNISHABLE BY FINE AND/OR IMPRISONMENT (U.S. CODE, TITLE 18, Section 1001), AND/OR REVOCATION OF ANY STATION LICENSE OR CONSTRUCTION PERMIT (U.S. CODE, TITLE 47, Section 312(a)(1)), AND/OR FORFEITURE (U.S. CODE, TITLE 47, Section 503).

National Exchange Carrier Association, Inc.
80 South Jefferson Road
Whippany, NJ 07981

Quarterly Period Covered
From: N/A
Cumulative Period Covered
From: 01/01 to 12/02

NECA Tariff Participants Form 492
Additional Statements

Pursuant to Section 65.600 of the Commission's Rules, NECA is submitting cumulative period Rate of Return information for the Common Line and Traffic Sensitive categories for the period January 2001 through December 2002, as of the August 2003 settlement view.

All of the individual line items on Form 492 include estimates and are subject to further adjustments, as Exchange Carriers revise data. The amounts in this report require the following additional explanations:

1) Thirty-six companies converted from average schedule settlements to cost-based settlements during the cumulative period. These conversions affect the levels of expenses and investment associated with the Common Line and Traffic Sensitive pools during the reporting periods.

2) The 2000 Modification of Average Schedules was effective July 1, 2000, the 2001 Modification of Average Schedules was effective July 1, 2001, and the 2002 Modification of Average Schedules was effective July 1, 2002. These formulas are the basis for total payments to average schedule companies in the current period that are included, along with Category I.B and I.C NECA administrative expenses, in line 2 of NECA's Form 492.

3) Some cost company reported expenses and investments included in NECA's FCC 492 report are based upon estimated data. Historically, expense and investment levels increase as companies begin reporting actual data. Considering this, it is expected that the rates of return reported on NECA's Form 492 report will decline as the companies update their studies. Also, Long Term Support, Interstate Common Line Support, and Local Switching Support payments are subject to true-ups pursuant to FCC rules.

4) The report includes cumulative period rate of return data reported to NECA for 1091 study areas that have participated in both NECA's carrier common line and traffic sensitive tariffs pursuant to Commission rules. Actual cost and average schedule settlements information is used for the study areas in the report. Revenues for these study areas are derived using the pool realized rate of return. The Total Interstate Access columns consist of data summed from the Common Line and Traffic Sensitive categories. Exchange carriers not included in NECA's Form 492 filed an interstate access tariff during the monitoring period and file their own Form 492 pursuant to Commission rules.

5) NECA reports the Rate of Return as an aggregate for the Traffic Sensitive category for monitoring purposes per Authorized Rates of Return for Interstate Services of AT&T Communications and Exchange Telephone Carriers, CC Docket No. 84-800 Phase I, Memorandum Opinion and Order, FCC 86-14 (released March 24, 1986) at n. 51.

NECA Direct Case

WC Docket No. 04-372

Exhibit 2

FINAL & INITIAL VIEW OF REVENUES AND EXPENSES & TAXES 1993 - 2003 WHERE INITIAL VIEW IS OF AUGUST OF THE LAST YEAR OF THE VIEW

EXHIBIT 2

	INTER-STATE														
	Common Line					Traffic Sensitive (SW)					Special Access				
	Settlement Revenues	Expenses & Taxes	Operating Income	Average Investment	**Rate Of Return**	Settlement Revenues	Expenses & Taxes	Operating Income	Average Investment	**Rate Of Return**	Settlement Revenues	Expenses & Taxes	Operating Income	Average Investment	**Rate Of Return**
Initial 1993 Amounts:	$859.171	$694.338	$164.833	$1,273.964	**12.94%**	$854.617	$733.600	$121.017	$887.927	**13.63%**	$63.845	$53.843	$10.002	$72.548	**13.79%**
Initial 1994 Amounts:	$926.863	$756.423	$170.440	$1,465.660	**11.63%**	$825.518	$717.200	$108.318	$881.652	**12.29%**	$56.885	$48.238	$8.647	$71.963	**12.02%**
Initial 1993-94 Amounts:	$1,786.173	$1,453.716	$332.457	$1,376.367	**12.08%**	$1,681.684	$1,454.218	$227.467	$873.677	**13.02%**	$120.869	$102.395	$18.474	$72.468	**12.75%**
Final 1993 Amounts:	$859.319	$697.211	$162.108	$1,286.851	**12.60%**	$856.234	$737.093	$119.141	$865.844	**13.76%**	$64.006	$54.167	$9.839	$72.979	**13.48%**
Final 1994 Amounts:	$926.531	$761.610	$164.921	$1,497.342	**11.01%**	$826.257	$719.739	$106.517	$879.191	**12.12%**	$57.514	$49.007	$8.508	$75.116	**11.33%**
Final 1993-94 Amounts:	$1,785.850	$1,458.821	$327.029	$1,392.096	**11.75%**	$1,682.491	$1,456.832	$225.658	$872.518	**12.93%**	$121.520	$103.173	$18.347	$74.047	**12.39%**
Difference Between 1993 Amounts:	$0.148	$2.873	-$2.725	$12.887	(34)	$1.617	$3.493	-$1.876	-$22.083	13	$0.161	$0.324	-$0.163	$0.432	(31)
Difference Between 1994 Amounts:	-$0.332	$5.187	-$5.519	$31.681	(62)	$0.739	$2.540	-$1.800	-$2.461	(18)	$0.629	$0.769	-$0.140	$3.152	(69)
Difference Between 1993-94 Amounts:	-$0.323	$5.105	-$5.428	$15.729	(33)	$0.806	$2.614	-$1.808	-$1.159	(9)	$0.651	$0.779	-$0.128	$1.580	(36)
Initial 1995 Amounts:	$986.119	$818.603	$167.516	$1,675.630	**10.00%**	$841.223	$731.308	$109.916	$905.328	**12.14%**	$61.423	$51.899	$9.524	$74.372	**12.81%**
Initial 1996 Amounts:	$1,051.436	$870.418	$181.018	$1,731.069	**10.46%**	$847.930	$743.977	$103.953	$834.724	**12.45%**	$60.861	$52.967	$7.893	$70.711	**11.16%**
Initial 1995-96 Amounts:	$2,037.740	$1,695.490	$342.250	$1,727.256	**9.91%**	$1,690.132	$1,477.973	$212.159	$867.661	**12.23%**	$122.443	$105.265	$17.178	$73.789	**11.64%**
Final 1995 Amounts:	$986.238	$821.288	$164.950	$1,696.027	**9.73%**	$842.335	$734.447	$107.888	$900.949	**11.97%**	$61.629	$52.331	$9.298	$76.899	**12.09%**
Final 1996 Amounts:	$1,051.230	$870.728	$180.502	$1,732.716	**10.42%**	$849.178	$747.427	$101.751	$829.582	**12.27%**	$61.127	$53.378	$7.748	$73.690	**10.51%**
Final 1995-96 Amounts:	$2,037.469	$1,692.016	$345.452	$1,714.372	**10.08%**	$1,691.513	$1,481.874	$209.639	$865.265	**12.11%**	$122.755	$105.709	$17.046	$75.294	**11.32%**
Difference Between 1995 Amounts:	$0.119	$2.686	-$2.566	$20.397	(27)	$1.112	$3.139	-$2.028	-$4.380	(17)	$0.206	$0.432	-$0.226	$2.526	(71)
Difference Between 1996 Amounts:	-$0.206	$0.310	-$0.516	$1.647	(4)	$1.248	$3.450	-$2.201	-$5.142	(19)	$0.266	$0.411	-$0.145	$2.979	(65)
Difference Between 1995-96 Amounts:	-$0.271	-$3.474	$3.203	-$12.885	17	$1.381	$3.901	-$2.520	-$2.396	(11)	$0.313	$0.444	-$0.131	$1.505	(32)
Initial 1997 Amounts:	$1,130.355	$926.385	$203.970	$1,820.631	**11.20%**	$834.569	$737.008	$97.561	$797.035	**12.24%**	$63.259	$56.088	$7.171	$75.743	**9.47%**
Initial 1998 Amounts:	$1,262.551	$1,039.840	$222.711	$1,893.836	**11.76%**	$889.023	$771.404	$117.619	$783.621	**15.01%**	$77.985	$67.744	$10.241	$90.865	**11.27%**
Initial 1997-98 Amounts:	$2,393.038	$1,971.806	$421.232	$1,863.457	**11.30%**	$1,723.706	$1,510.233	$213.473	$781.648	**13.66%**	$141.297	$124.622	$16.675	$86.784	**9.61%**
Final 1997 Amounts:	$1,130.577	$932.045	$198.532	$1,833.553	**10.83%**	$834.604	$738.961	$95.643	$780.195	**12.26%**	$63.290	$56.858	$6.431	$82.713	**7.78%**
Final 1998 Amounts:	$1,262.708	$1,045.465	$217.243	$1,972.354	**11.39%**	$882.696	$769.277	$113.419	$773.399	**14.67%**	$78.278	$69.041	$9.237	$99.307	**9.30%**
Final 1997-98 Amounts:	$2,393.285	$1,977.510	$415.775	$1,902.953	**10.92%**	$1,717.300	$1,508.238	$209.062	$776.797	**13.46%**	$141.568	$125.900	$15.668	$91.010	**8.61%**
Difference Between 1997 Amounts:	$0.222	$5.659	-$5.437	$12.921	(38)	$0.035	$1.953	-$1.918	-$16.840	2	$0.030	$0.770	-$0.740	$6.970	(169)
Difference Between 1998 Amounts:	$0.157	$5.625	-$5.468	$78.518	(37)	-$6.327	-$2.128	-$4.199	-$10.222	(35)	$0.293	$1.297	-$1.005	$8.442	(198)
Difference Between 1997-98 Amounts:	$0.247	$5.704	-$5.456	$39.496	(38)	-$6.406	-$1.995	-$4.410	-$4.852	(20)	$0.271	$1.278	-$1.007	$4.226	(100)
Initial 1999 Amounts:	$1,341.836	$1,118.538	$223.298	$1,969.425	**11.34%**	$845.810	$745.443	$100.367	$798.652	**12.57%**	$99.327	$85.459	$13.868	$110.237	**12.58%**
Initial 2000 Amounts:	$1,416.908	$1,173.112	$243.796	$2,051.154	**11.89%**	$850.585	$754.109	$96.476	$806.710	**11.96%**	$133.676	$115.090	$18.586	$156.533	**11.87%**
Initial 1999-00 Amounts:	$2,758.641	$2,298.103	$460.538	$2,012.555	**11.44%**	$1,698.819	$1,502.906	$195.913	$793.883	**12.34%**	$233.521	$202.005	$31.517	$137.290	**11.48%**
Final 1999 Amounts:	$1,341.700	$1,125.064	$216.636	$1,973.887	**10.98%**	$848.143	$748.768	$99.375	$781.243	**12.72%**	$99.897	$86.947	$12.950	$118.024	**10.97%**
Final 2000 Amounts:	$1,416.355	$1,175.227	$241.128	$2,057.134	**11.72%**	$844.088	$751.723	$92.365	$793.921	**11.63%**	$134.375	$117.346	$17.029	$168.260	**10.12%**
Final 1999-00 Amounts:	$2,758.055	$2,300.291	$457.764	$2,015.511	**11.36%**	$1,692.231	$1,500.491	$191.740	$787.582	**12.17%**	$234.272	$204.294	$29.978	$143.142	**10.47%**
Difference Between 1999 Amounts:	-$0.136	$6.526	-$6.662	$4.462	(36)	$2.333	$3.324	-$0.991	-$17.409	15	$0.570	$1.488	-$0.918	$7.787	(161)
Difference Between 2000 Amounts:	-$0.553	$2.115	-$2.668	$5.980	(17)	-$6.497	-$2.385	-$4.112	-$12.789	(33)	$0.699	$2.256	-$1.557	$11.727	(176)
Difference Between 1999-00 Amounts:	-$0.586	$2.189	-$2.775	$2.956	(9)	-$6.588	-$2.415	-$4.173	-$6.301	(17)	$0.751	$2.289	-$1.538	$5.852	(101)
Initial 2001 Amounts:	$1,541.814	$1,279.117	$262.697	$2,208.988	**11.89%**	$883.521	$775.584	$107.937	$848.984	**12.71%**	$194.046	$163.332	$30.714	$229.411	**13.39%**
Initial 2002 Amounts:	$1,883.129	$1,595.742	$287.387	$2,284.008	**12.58%**	$736.244	$624.451	$111.793	$861.832	**12.97%**	$255.404	$217.486	$37.918	$290.246	**13.06%**
Initial '2001-02 Amounts:	$3,426.046	$2,879.984	$546.062	$2,265.866	**12.05%**	$1,613.126	$1,398.142	$214.984	$842.503	**12.76%**	$450.607	$383.349	$67.259	$267.555	**12.57%**
Most Recent 2001 Amounts:	$1,542.582	$1,284.000	$258.582	$2,247.637	**11.50%**	$876.716	$773.693	$103.023	$822.378	**12.53%**	$195.334	$165.933	$29.401	$244.884	**12.01%**
Most Recent 2002 Amounts:	$1,881.530	$1,604.117	$277.413	$2,288.318	**12.12%**	$720.810	$607.831	$112.980	$821.105	**13.76%**	$258.523	$226.180	$32.344	$308.693	**10.48%**
Most Recent 2001-02 Amounts:	$3,424.112	$2,888.118	$535.994	$2,267.978	**11.82%**	$1,597.526	$1,381.523	$216.003	$821.742	**13.14%**	$453.857	$392.112	$61.745	$276.789	**11.15%**
Difference Between 2001 Amounts:	$0.768	$4.883	-$4.115	$38.649	(39)	-$6.805	-$1.891	-$4.914	-$26.606	(19)	$1.288	$2.600	-$1.312	$15.473	(138)
Difference Between 2002 Amounts:	-$1.599	$8.375	-$9.974	$4.310	(46)	-$15.434	-$16.621	$1.187	-$40.727	79	$3.119	$8.693	-$5.574	$18.447	(259)
Difference Between 2001-02 Amounts:	-$1.934	$8.133	-$10.067	$2.111	(23)	-$15.600	-$16.619	$1.019	-$20.761	38	$3.250	$8.764	-$5.514	$9.233	(142)
Initial 2003 Amounts:	$1,961.146	$1,689.114	$272.032	$2,278.156	**11.94%**	$762.485	$643.082	$119.403	$788.897	**15.14%**	$316.218	$274.491	$41.727	$356.748	**11.70%**
Most Recent 2003 Amounts:	$1,961.146	$1,689.114	$272.032	$2,278.156	**11.94%**	$762.485	$643.082	$119.403	$788.897	**15.14%**	$316.218	$274.491	$41.727	$356.748	**11.70%**
Difference Between 2003 Amounts:	$0.000	$0.000	$0.000	$0.000	0	$0.000	$0.000	$0.000	$0.000	0	$0.000	$0.000	$0.000	$0.000	0
Projected Final 2003 Amounts:	$1,954.093	$1,691.364	$262.729	$2,335.748	**11.25%**	$748.533	$635.673	$112.860	$814.443	**13.86%**	$319.189	$283.662	$35.527	$390.046	**9.11%**

Table 1 shows pool true-up data for cost companies only. NECA does not have 492 level account detail for average schedule companies. To complete the true-up record, NECA has added another exhibit that displays average schedule true-up data. This true-up table uses the same reporting periods (initial and final) and income difference criterion as is used for cost companies.

Settlement revenue data shown is the companies' share of total revenues reported to the NECA pool. In this report, one component is shown as Expenses and Other Taxes, and the remainder is shown as Operating Income.

2003 projections were developed by examining projections of demand and costs as of August 31, 2004. On the demand side, NECA relies on company forecasts for its lines forecasts. NECA verifies the reasonability of these forecasts in two basic ways: First, NECA develops its own forecast for each study area using a trend model. Second, NECA compares a study area's forecast to those submitted by other companies.

NECA develops forecasts of minutes and special access service demand internally. The 2003 minutes forecast is derived from an econometric model that has passed a battery of statistical tests as documented in the 2004 Annual Filing. "Minutes" is the dependent variable. The independent variables are log of real price for interstate wireline services, the log of real price for wireless services, the log of real disposable personal income, and employment. The special access forecast is built on an autoregressive, integrated moving average (ARIMA) time series model, which produces forecasts from history by weighting the most recent historical data more heavily than data from the more distant past. Tests of this model are also documented in NECA's 2004 Annual Filing.

On the cost side, NECA bases its 2003 forecasts for expenses and other taxes and average net investment (rate base) on the forecasts submitted by member companies for the 2004 Annual Filing. These forecasts are the product of a company's view of calendar 2003 after reviewing historical growth trends and analyzing needs of the business for that year. They are not final forecasts because cost companies have not completed 2003 cost studies by August 31, 2004. Nevertheless, these forecasts have also undergone a battery of reasonability checks at NECA, including comparisons of 2003 data with individual companies' historical growth trend.

NECA Direct Case - WC Docket No. 04-372

Exhibit 2

Attachment 2

TS/Switched Billed Access Charge Revenue and LSS True-Ups

		Revenue	Uncollectible	Support	Total Switched Revenue
1998					
	Initial	$593.68	$0.13	$295.47	$889.02
	Final	$594.76	$0.23	$288.16	$882.70
	Difference	$1.08	$0.10	($7.31)	($6.33)
1999					
	Initial	$567.44	$0.09	$278.46	$845.81
	Final	$568.42	$0.14	$279.86	$848.14
	Difference	$0.98	$0.05	$1.40	$2.34
2000					
	Initial	$563.07	$0.24	$287.76	$850.58
	Final	$562.61	$0.26	$281.74	$844.09
	Difference	($0.47)	$0.01	($6.02)	($6.50)
2001					
	Initial	$587.04	$0.72	$297.20	$883.52
	Final	$587.17	$0.99	$290.53	$876.72
	Difference	$0.13	$0.27	($6.67)	($6.81)
2002					
	Initial	$458.87	$21.72	$299.09	$736.24
	Final	$456.95	$20.90	$284.77	$720.81
	Difference	($1.92)	($0.81)	($14.33)	($15.43)
2003	Initial	$448.30	$3.37	$317.55	$762.49
	Projected	$448.37	$3.00	$303.17	$748.54
	Difference	$0.07	($0.37)	($14.38)	($13.95)

NECA Direct Case

WC Docket No. 04-372

Exhibit 3A

Filed Under Protective Cover

NECA Direct Case

WC Docket No. 04-372

Exhibit 3B

Filed Under Protective Cover

NECA Direct Case

WC Docket No. 04-372

Exhibit 3C

Filed Under Protective Cover

NECA Direct Case

WC Docket No. 04-372

Exhibit 4A

Filed Under Protective Cover

NECA Direct Case

WC Docket No. 04-372

Exhibit 4B

Filed Under Protective Cover

NECA Direct Case

WC Docket No. 04-372

Exhibit 4C

Filed Under Protective Cover

NECA Direct Case

WC Docket No. 04-372

Exhibit 5A

STATE OF ALASKA

DEPARTMENT OF COMMUNITY AND ECONOMIC DEVELOPMENT
REGULATORY COMMISSION OF ALASKA

FRANK H. MURKOWSKI, GOVERNOR

701 WEST EIGHTH AVENUE, SUITE 300
ANCHORAGE, ALASKA 99501-3469
PHONE: (907) 276-6222
FAX: (907) 276-0160
TTY: (907) 276-4533
WEBSITE: www.state.ak.us/rca/

September 8, 2004

In reply refer to: Tariff Section
File: U-03-063

Ted Moninski
Regulatory Affairs Director
ACS of Fairbanks, Inc.
600 Telephone Avenue, MS60
Anchorage, Alaska 99503

Dear Mr. Moninski:

Pursuant to Order No. 5 in Docket U-03-63, enclosed is a validated copy of the Interconnection Agreement between ACS of Fairbanks, Inc. and GCI Communication Corp , filed on May 18, 2004. The effective date of the Agreement is August 16, 2004. A copy of the validated Agreement has also been sent to GCI Communication Corp.

Please note that a reference to Order No. U-03-63(5) and the effective date have been added to each page of the Agreement.

Sincerely,

REGULATORY COMMISSION OF ALASKA

Juliana Wayman

Juliana Wayman
Chief, Tariff Section

Enclosure

ORIGINAL U-03-063 ✓
U-03-064
RECEIVED U-03-065
MAY 18 2004
STATE OF ALASKA
REGULATORY COMMISSION OF ALASKA

AMENDED AND RESTATED INTERCONNECTION AND RESALE AGREEMENT

Between

ACS OF FAIRBANKS, INC.

And

GCI COMMUNICATION CORP.

Pursuant to: U-03-63(5)
U-03-64(5)

Effective: August 16, 2004

RECEIVED
MAY 18 2004
State of Alaska
Regulatory Commission of Alaska

Table of Contents

PART A – General Terms and Conditions 1

PART B – Definitions 19

PART C – Attachment I – Price Schedule 22

PART C – Attachment II – Local Resale 28

PART C – Attachment III – Network Elements 29

PART C – Attachment IV – General Interconnection and Operational Requirements 46

PART C – Attachment V – Collocation 79

PART C – Attachment VI – Rights of Way ("ROW'), Conduits, Pole Attachments 104

PART C – Attachment VII – Local Number Portability 114

PART C – Attachment VIII – General Business Requirements 115

PART C – Attachment IX – Reporting Standards 118

PART C – Attachment X – Processing and Provisioning Interval Metrics 124

RECEIVED
MAY 18 2004
State of Alaska
Regulatory Commission of Alaska

AMENDED AND RESTATED INTERCONNECTION AND RESALE AGREEMENT

This Amended and Restated Interconnection and Resale Agreement (the "Agreement"), entered into this 18th day of May, 2004, by and between GCI Communication Corp. ("GCICC"), an Alaska Corporation, and ACS of Fairbanks, Inc. ("ACS-F"), a corporation organized and existing under the laws of the State of Alaska, to establish the rates, terms and conditions for local interconnection, local resale, and purchase of unbundled network elements (individually referred to as the "service" or collectively as the "services").

WHEREAS, the Parties wish to interconnect their local exchange networks in a technically and economically efficient manner for the transmission and termination of calls, so that customers of each can seamlessly receive calls that originate on the other's network and place calls that terminate on the other's network, and for GCICC's use in the provision of exchange access ("Local Interconnection"); and

WHEREAS, GCICC wishes to purchase Telecommunications Services for resale to others, and ACS-F is willing to provide such service; and

WHEREAS, GCICC wishes to purchase unbundled network elements, services and functions ("Network Elements"), and to use such services for itself or for the provision of its Telecommunications Services to others, and ACS-F is willing to provide such services; and

WHEREAS, GCICC wishes to purchase some ancillary services and functions and additional features, which are specifically included in this Agreement, and to use such services for itself or for the provision of its Telecommunications Services to others, and ACS-F is willing to provide such services; and

WHEREAS, the Parties intend this Agreement to comply with the Communications Act of 1934, as amended by the Telecommunications Act of 1996 (the "Act"), the Rules and Regulations of the Federal Communications Commission ("FCC"), and the orders, rules and regulations of the Regulatory Commission of Alaska (the "Commission");

Now, therefore, in consideration of the terms and conditions contained herein, GCICC and ACS-F hereby mutually agree as follows:

RECEIVED
MAY 13 2004
State of Alaska
Regulatory Commission of Alaska

PART A – GENERAL TERMS AND CONDITIONS

Section 1 Scope of this Agreement

1.1 This Agreement, including Parts A, B, and C, specifies the rights and obligations of each party with respect to the establishment, purchase, and sale of Local Interconnection, resale of Telecommunications Services and Unbundled Network Elements. This PART A sets forth the general terms and conditions governing this Agreement. Terms used but not defined herein will have the meanings ascribed to them in the Telecommunications Act of 1996 ("Act"), in the FCC's, and in the Regulatory Commission of Alaska's ("Commission") Rules and Regulations as of the Approval Date of this Agreement. PART C sets forth, among other things, descriptions of the services, pricing, technical and business requirements, and physical and network security requirements.

LIST OF ATTACHMENTS COMPRISING PART C:

I. Price Schedule
II. Local Resale
III. Network Elements
IV. Interconnection
V. Collocation
VI. Rights of Way
VII. Number Portability
VIII. General Business Requirements
IX. Reporting Standards
X. Processing and Provisioning Interval Metrics

1.2 ACS-F shall provide notice of network changes and upgrades in accordance with Sections 51.325 through 51.335 of Title 47 of the Code of Federal Regulations.

Section 2 Regulatory Approvals

2.1 This Agreement, and any amendment, modification, or material clarification hereof, will be submitted to the Commission for approval in accordance with Section 252 of the Act. In the event that the Commission or any court or regulatory agency of competent jurisdiction rejects any provision of this Agreement, the Parties shall negotiate promptly and in good faith revisions as may reasonably be required to achieve approval of the Agreement.

2.2 Any performance or duty in this Agreement which anticipates or is dependent on the development and implementation of any additional electronic interface capabilities is contingent on the final terms for such an interface, including allocation of costs and scheduling, to be negotiated by the parties, or in the event the parties cannot agree, as

RECEIVED
MAY 18 2004
State of Alaska
Division of Alaska

presented for arbitration, as directed by the Commission in Order U-99-141/142/143(9), dated August 24, 2000.

2.3 In the event that a regulatory agency or court of competent jurisdiction (a) finds that the terms of this Agreement are inconsistent in one or more material respects with applicable federal or state law or any applicable rules, regulations, or orders, or (b) alters or preempts the effect of this Agreement, then, once such decision is final and no longer subject to administrative or judicial review, the Parties immediately shall commence good faith negotiations to conform this Agreement to the terms of such decision or to the terms of the subject federal or state law or applicable rules, regulations, or orders.

Section 3 Term and Termination

3.1 This agreement shall be deemed effective upon the Approval Date. No order or request for services under this Agreement shall be processed, with the exception of noncommercial testing, until this Agreement is so approved unless otherwise agreed to, in writing by the parties or as may be allowed by Commission order.

3.2 The term of this Agreement shall commence as of the Approval Date, and the Agreement shall remain in effect until midnight on January 1, 2008. The parties may, by written agreement, elect to extend its term for a year. The parties may thereafter, by written agreement prior to the end of the additional or any subsequent one year term, elect to further extend the term of the agreement for an additional one year term or terms. Notwithstanding the foregoing, the Parties agree that the terms of Part C, Attachment X remain in effect until March 5, 2009, unless changed by written agreement of the Parties.

3.3 At the end of the 26th month from approval, or ten months prior to the end of any subsequent one year term upon which the parties may have agreed, the parties agree that they shall immediately commence a good faith negotiation pursuant to the Telecommunications Act of 1996, and any applicable regulations, rules, or orders of this Commission, to secure a new agreement. It is the express intention of the parties that such an agreement shall be negotiated by, or arbitrated between the parties and approved by this Commission within ten months thereafter as provided by law. The parties agree to exercise their best efforts and all necessary diligence to secure approval of a new agreement by the end of ten months. The parties further agree that services under this agreement shall continue to be provided, without interruption and subject to all terms and conditions of this agreement, throughout the ten month negotiation, arbitration and approval period, unless a new agreement should be approved sooner.

3.4 Should a new agreement nevertheless not be approved within the ten month period provided for under the Act, and by this agreement, the parties agree as follows: Services under this agreement shall continue to be provided without interruption for an additional six months, subject to all terms and conditions of this agreement, except as they may be modified by an applicable interim order as provided herein. During this period either party may apply to this Commission, the FCC, or any court of competent

MAY 1 8 2004
Regulatory Commission of Alaska

jurisdiction, as may be appropriate, for interim relief on an expedited basis in the form of an order extending or modifying the terms of this agreement, pending approval of a new agreement.

Section 4 Charges and Payment

4.1 In consideration of the services and network elements provided by ACS-F under this Agreement, GCICC shall pay the charges set forth in Attachment I.

4.2 In consideration of the network elements provided by GCICC under this Agreement, ACS-F shall pay the charges set forth in Attachment I.

Section 5 Audits and Examinations

5.1 As used herein "Audit" shall mean a comprehensive review of services performed under this Agreement. Either party may perform audits no more frequently than one (1) in each twelve (12) month period.

5.2 Upon sixty (60) days written notice by the requesting party to the other, the requesting party shall have the right through its authorized representative to make an Audit. Such Audit shall take place during normal business hours, of records, accounts, and processes which contain information bearing upon the provision of the services provided and performance standards under this Agreement. Within the above-described period, the Parties shall reasonably agree upon the scope of the Audit, the documents and processes to be reviewed, and the time, place and manner in which the Audit shall be performed. Responding party agrees to provide Audit support, including appropriate access to and use of facilities (e.g., conference rooms, telephones, copying machines).

5.3 As used herein, "Examination" shall mean a discrete inquiry into a specific element of, or process related to, services performed under this Agreement. The Examination will consist of an investigation into any specific complaint, discrepancy, or concern in service which either party may bring to the other's attention. The responding party agrees, in good faith, to provide information or documents sufficient to address or explain the complaint or discrepancy, and to provide the requesting party a reasonable opportunity to monitor provision of the service at issue.

5.4 Each party shall bear its own expenses in connection with the conduct of the Audit or Examination. The reasonable cost of special data extraction required to conduct the Audit or Examination will be paid for by the requesting party. For purposes of this Section 5.4, a "Special Data Extraction" shall mean the creation of an output record or informational report (from existing data files) that is not created in the normal course of business. If any program is developed to the requesting party's specifications and at that party's expense, the requesting party shall specify at the time of request whether the program is to be retained by the responding party for reuse for any subsequent Audit or Examination.

RECEIVED
MAY 1 8 2004
State of Alaska
Regulatory Commission of Alaska

5.5 Neither such right to examine and audit nor the right to receive an adjustment shall be affected by any statement to the contrary appearing on checks or otherwise, unless such statement expressly waiving such right appears in writing, is signed by the authorized representative of the party having such right and is delivered to the other party in a manner sanctioned by this Agreement.

5.6 This Section 5 shall survive expiration or termination of this Agreement for a period of two (2) years after expiration or termination of this Agreement.

Section 6 Network Element Bona Fide Request Process for Further Unbundling

6.1 Based upon the consideration of the scope of the Network elements, Services and Local Interconnection provided by ACS-F under this Agreement, ACS-F shall promptly consider and analyze access to categories of unbundled Network Elements not covered in this Agreement with the submission of a Network Element Bona Fide Request by GCICC hereunder. The Network Element Bona Fide Request process set forth herein is intended solely to address provision of interconnection, elements and services not currently available from ACS-F or not currently required by applicable law.

6.2 A Network Element Bona Fide Request shall be submitted in writing and shall include a technical description of each requested Network Element. The parties will meet to discuss such request and to clarify any questions regarding its scope.

6.3 GCICC may cancel a Network Element Bona Fide Request at any time, but shall pay ACS-F actual, reasonable, and verifiable costs of processing and/or implementing the Network Element Bona Fide Request up to the date of cancellation.

6.4 Within forty-five (45) days of its receipt of a Network Bona Fide Request, ACS-F shall deliver to GCICC a preliminary analysis of such Network Element Bona Fide Request. The preliminary analysis shall confirm that ACS-F will offer access to the Network Element or will provide a detailed explanation of why it will not offer such access.

6.5 Upon receipt of the preliminary analysis, GCICC shall, within thirty (30) days, notify ACS-F of its intent to proceed or not to proceed.

6.6 ACS-F shall promptly proceed with the Network Element Bona Fide Request upon receipt of written authorization from GCICC. When it receives such authorization, ACS-F shall promptly develop the requested services, determine their availability, calculate the applicable prices and establish installation intervals.

6.7 As soon as feasible, but not more than sixty (60) days after its receipt of authorization to proceed with developing the Network Element Bona Fide Request, ACS-F shall provide to GCICC a Network Element Bona Fide Request quote which will

RECEIVED
MAY 13 2004
Clerk of the Court
Regulatory Commission of Alaska

include, at a minimum, a description of each Network Element, the availability, the applicable rates and the installation intervals.

6.8 Within thirty (30) days of its receipt of the Network Element Bona Fide Request quote, GCICC must either confirm its order for the Network Bona Fide Request pursuant to the Network Element Bona Fide Request quote or seek arbitration by the Commission pursuant to Section 252 of the Act.

Section 7 Intellectual Property Rights

Any intellectual property which originates from or is developed by a Party shall remain in the exclusive ownership of that Party. Except for a limited license to use patents or copyrights to the extent set forth in this Agreement and necessary for the Parties to use any facilities or equipment (including software), or to receive any service solely as provided under this Agreement, no license in patent, copyright, trademark or trade secret, or other proprietary or intellectual property right now or hereafter owned, controlled or licensable by a Party, is granted to the other party or shall be implied or arise by estoppel. To the extent not precluded by law or agreement with third parties, and when available, each party shall, in good faith, use its best efforts and assist in seeking to obtain any licenses or sublicenses in relation to the intellectual property used in its network that may be required to enable the other party to receive services as provided within this agreement. Any costs, fees, or expenses associated with obtaining and use of the license is to be borne by the party receiving the service.

Section 8 Limitation of Liability

Neither Party shall be responsible to the other for any indirect, special, consequential or punitive damages, including (without limitation) damages for loss of anticipated profits or revenue or other economic loss in connection with or arising from anything said, omitted, or done hereunder (collectively "Consequential Damages"), whether arising in contract or tort, provided that the foregoing shall not limit a Party's obligation under Section 9 to indemnify, defend, and hold the other party harmless against amounts payable to third parties.

Section 9 Indemnification

9.1 To the extent not prohibited by law, each Party shall, and hereby agrees to, defend at the other's request, indemnify and hold harmless the other Party and each of its officers, directors, employees and agents (each, an "Indemnitee") against and in respect of any loss, debt, liability, damage, obligation, claim, demand, judgment or settlement or any nature or kind, known or unknown, liquidated or unliquidated, including without limitation all reasonable costs and expenses incurred (legal, accounting or otherwise) (collectively, "Damages") arising out of, resulting from or based upon any pending or threatened claim, action, proceeding or suit by any third party (a "Claim"): (i) based upon injuries or damage or death to any person or property or the environment arising out

of or in connection with this Agreement including but not limited to collocation; that are the result of or arising out of such Indemnifying Party's actions or omissions, including negligence or willful acts, breach of Applicable Law, or breach of representations or covenants made in this Agreement, or the actions, breach of Applicable Law or of this Agreement by its officers, directors, employees, agents and subcontractors, or (ii) for actual or alleged infringement of any patent, copyright, trademark, service mark, trade name, trade dress, trade secret or any other intellectual property right now known or later developed (referred to as "Intellectual Property Rights") to the extent that such claim or action arises from the Indemnifying Party's or the Indemnifying Party's Customer's use of the Network Elements, Ancillary Functions, Combinations, Local Services or other services provided under this Agreement.

9.2 The indemnifying Party under this Section agrees to defend any suit brought against the other Party either individually or jointly with the indemnified Party for any such loss, injury, liability, claim or demand. The indemnified Party agrees to notify the other Party promptly, in writing, of any written claims, lawsuits, or demands for which it is claimed that the indemnifying Party is responsible under this Section and to cooperate in every reasonable way to facilitate defense or settlement of claims. The indemnifying Party shall have complete control over defense of the case and over the terms of any proposed settlement or compromise thereof. The indemnifying Party shall not be liable under this Section for settlement by the indemnified Party of any claim, lawsuit, or demand, if the indemnifying Party has not approved the settlement in advance, unless the indemnifying Party has had the defense of the claim, lawsuit, or demand tendered to it in writing and has failed to assume such defense. In the event of such failure to assume defense, the indemnifying Party shall be liable for any reasonable settlement made by the indemnified Party without approval of the indemnifying Party.

9.3 Each Party agrees to indemnify and hold harmless the other Party from all claims and damages arising from the Indemnifying Party's discontinuance of service to one of the Indemnifying Party's subscribers for nonpayment.

9.4 When the lines or services of other companies and Carriers are used in establishing connections to and/or from points not reached by a Party's lines, neither Party shall be liable for any act or omission of the other companies or Carriers. In addition to its indemnity obligations hereunder, each Party shall, to the extent allowed by law or Commission Order, provide, in its tariffs and contracts with its subscribers that relate to any Telecommunications Services or Network Element provided or contemplated under this Agreement, that in no case shall such Party or any of its agents, contractors or others retained by such Party be liable to any subscriber or third party for (i) any loss relating to or arising out of this Agreement, whether in contract or tort, that exceeds the amount such Party would have charged the applicable subscriber for the service(s) or function(s) that gave rise to such loss.

MAY 3 2004
State of Alaska
Regulatory Commission of Alaska

Section 10 Remedies

10.1 In addition to any other rights or remedies, to the extent permitted by applicable law, and unless specifically provided here and to the contrary, either Party may sue in equity for specific performance.

10.2 Except as otherwise provided herein, all rights of termination, cancellation or other remedies prescribed in this Agreement, or otherwise available, are cumulative and are not intended to be exclusive of other remedies to which the injured Party may be entitled at law or equity in case of any breach or threatened breach by the other Party of any provision of this Agreement, and use of one or more remedies shall not bar use of any other remedy for the purpose of enforcing the provisions of this Agreement.

Section 11 Insurance

11.1 GCICC shall, at its expense, obtain and keep in force during the term of this agreement, the following types and minimum limits of insurance:

Commercial General Liability	$10 Million per combined single limit applying occurrence to bodily injury and property damage.
Worker's Compensation Insurance	Statutory
Employers' Liability	$500,000
Automotive Liability	$1 Million per occurrence

11.2 Required limits may be satisfied through primary and umbrella or excess policies; all insurance coverage shall be underwritten by companies licensed to do business in the State of Alaska. All policies required of GCICC shall be deemed to be primary and not contributing to or in excess of any similar insurance coverage purchased or maintained by ACS-F.

11.3 Each policy shall contain a waiver of subrogation clause.

11.4 All policies, as permitted by law, shall be endorsed to name ACS-F as an Additional Insured. GCICC shall produce Certificate(s) of Insurance, including a copy of the Additional Insured Endorsement prior to ACS-F's performance under this contract and annually thereafter as long as GCICC uses or occupies collocation space. GCICC, or GCICC's insurer, shall provide ACS-F with sixty (60) days advance written notice of any material change or cancellation of any of the coverage specified above. All insurance shall remain in force so long as this Agreement is in effect or GCICC's equipment remains within any collocation space, whichever is later. GCICC's obligation to provide

insurance coverage is not limited to collocation activity, but is intended to cover any liability arising out of this Agreement.

Section 12 Confidentiality and Publicity

12.1 Subject to the limitations of Section 12.3, all information which is disclosed by one party ("Disclosing Party") to the other ("Recipient") in connection with this Agreement, or acquired in the course of performance of this Agreement, shall be deemed confidential and proprietary to the Disclosing Party and subject to this Agreement. Confidential or proprietary information shall be used for purposes of interconnection only and shall not be used in any way whatsoever for marketing. Such information includes but not limited to, trade secrets, technical and business plans, technical information, proposals, specifications, drawings, procedures, customer account data, orders for services, usage information in any form.

12.2 Regardless of the means of disclosure, Information shall be protected by the receiving Party in accordance with the terms of this Section 12, provided that such Information should reasonably have been understood by the receiving Party, by virtue of legends or other markings or the circumstances of disclosure or the nature of the Information itself, to be proprietary and confidential to the disclosing Party. Each Party agrees that the Information it receives shall not be copied or reproduced in any form except to the extent reasonably necessary to such Party's exercise of its rights or performance of its obligations pursuant to this Agreement. Each Party agrees to protect the Information received from distribution, disclosure or dissemination to anyone except its employees and consultants with a need to know such Information. When requested as to specific information, each party agrees to provide the other with a list of persons receiving the confidential or proprietary information. Each Party will use the same standard of care to protect Information received as it would use to protect its own confidential and proprietary Information.

12.3 Notwithstanding the provisions of Section 12.1, there will be no obligation to protect any portion of Information that is (a) made available by the owner of the Information or lawfully disclosed by a nonParty to this Agreement; (b) lawfully obtained from any source other than the owner of the Information; (c) previously known to the receiving Party without an obligation to keep it confidential; or (d) independently developed by the receiving Party without use of the Information disclosed.

12.4 Disclosure of Information received shall not be prohibited to the extent such disclosure is compelled by a court or administrative agency having jurisdiction over the receiving Party or is otherwise required by law. In such event, however, the receiving Party shall use reasonable efforts to notify the other Party prior to making such disclosure and shall cooperate in the other Party's efforts to object to such disclosure or to obtain confidential treatment of the Information to be disclosed.

MAY 1 8 2004

12.5 This Section 12 shall survive the termination or expiration of this Agreement with respect to any Information disclosed by one Party to the other while this Agreement was in effect. All Information shall be returned to the disclosing Party within a reasonable time following the disclosing Party's request following the termination or expiration of this Agreement.

Section 13 Warranties

EXCEPT AS SPECIFICALLY PROVIDED IN PART C – ATTACHMENT V, SECTION 7.9, NEITHER PARTY MAKES ANY REPRESENTATIONS OR WARRANTIES TO THE OTHER CONCERNING THE SPECIFIC QUALITY OF ANY SERVICES OR FACILITIES PROVIDED UNDER THIS AGREEMENT. BOTH PARTIES DISCLAIM, WITHOUT LIMITATION, ANY WARRANTY OR GUARANTEE OF MERCHANTABILITY OR FITNESS FOR A PARTICULAR PURPOSE, ARISING FROM COURSE OF PERFORMANCE, COURSE OF DEALING, OR FROM USAGES OF TRADE.

Section 14 Assignment and Subcontract

A Party shall have the right to assign this Agreement or any right, obligation or interest hereunder to an affiliated entity upon written notice to the other Party. Neither Party shall assign this Agreement, or any of its rights, obligations, or interest hereunder to a non-affiliated entity, without the prior written consent of the other Party, which consent shall not be unreasonably withheld. Any assignment or delegation in violation of this Section shall be void and ineffective, and shall constitute a default of this Agreement.

Section 15 Governing Law

The construction, interpretation, and performance of this agreement shall be governed by and construed in accordance with the laws of the State of Alaska except for its conflicts of laws provisions. In addition, insofar as and to the extent federal law may apply, federal law will control.

Section 16 Relationship of Parties

Each Party shall perform services hereunder as an independent contractor and nothing herein shall be construed as creating any other relationship between the Parties. Each Party and each Party's contractor shall be solely responsible for the withholding or payment of all applicable federal, state, and local income taxes, social security taxes, and other payroll taxes with respect to its employees, as well as any taxes, contributions, or other obligations imposed by applicable state unemployment or workers' compensation

MAY 13 2004

acts. Each Party has sole authority and responsibility to hire, fire, and otherwise control its employees.

Section 17 No Third Party Beneficiaries

The provisions of this Agreement are for the benefit of the Parties hereto and not for any other person, provided, however, that this shall not be construed to prevent GCICC from providing its Telecommunications Services to other carriers. This Agreement shall not provide any person not a party hereto with any remedy, claim, liability, reimbursement, claim of action, or other right in excess of those existing without reference hereto.

Section 18 Notices

Documents sent between ACS-F and GCICC that require action within specified time frames shall be sent by certified mail with return receipt, facsimile, or hand delivered. Hand delivered documents shall be date stamped or noted otherwise by the receiving party to record the date of receipt. The date and time of receipt shall be the date and time shown on the return receipt where certified mail was used, the date and time shown on the header if facsimile was used, or the date stamp where the documents were hand delivered.

To GCICC:

Name:	Gina Borland
Title:	VP and General Manager of Local Services
Address:	2550 Denali Street, Suite 1000 Anchorage, AK 99503
Name:	Mark Moderow
Title:	Corporate Counsel
Address:	2550 Denali Street, Suite 1000 Anchorage, AK 99503

To ACS-F:

Name:	Jill Hume
Title:	Manager, Carrier Relations
Address:	600 Telephone Avenue, MS60 Anchorage, Alaska 99503
Name:	Leonard Steinberg
Address:	General Counsel 600 Telephone Avenue, MS65 Anchorage, Alaska 99503

MAY 1 8 2004

Section 19 Waivers

19.1 No waiver of any provisions of this Agreement and no consent to any default under this Agreement shall be effective unless the same shall be in writing and properly executed by or on behalf of the Party against whom such waiver or consent is claimed.

19.2 No course of dealing or failure of any Party to strictly enforce any term, right, or condition of this Agreement in any instance shall be construed as a general waiver or relinquishment of such term, right or condition.

19.3 Waiver by either party of any default by the other Party shall not be deemed a waiver of any other default.

Section 20 Force Majeure

Neither Party shall be held liable for any delay or failure in performance of any part of this Agreement from any cause beyond its reasonable control and without its fault or negligence, such as acts of God, acts of civil or military authority, embargoes, epidemics, war, terrorist acts, riots, insurrections, fires, explosions, volcano eruptions, earthquakes, avalanches, tsunami, nuclear accidents, floods, power blackouts, strikes, work stoppage affecting a supplier or unusually severe weather. No delay or other failure to perform shall be excused pursuant to this Section 21 unless delay or failure and consequences thereof are beyond the control and without the fault or negligence of the Party claiming excusable delay or other failure to perform. In the event of any such excused delay in the performance of a Party's specific obligation(s) under this Agreement, the due date for the performance of such original obligation(s) shall be extended by a term equal to the time lost by reason of the delay, but such extension shall not work to extend the then current term of this Agreement. In the event of such delay, the delaying party shall provide notice to the other party of the force majeure event, the probable delay, and the arrangements for performance.

Section 21 Dispute Resolution

21.1 Any dispute between the Parties regarding the interpretation or enforcement of this Agreement or any of its terms shall be addressed in the first instance by the Parties through good faith negotiations, at the managerial level, for a minimum period of thirty (30) days.

21.2 Any dispute arising out of or relating to this Agreement that the Parties themselves cannot resolve through negotiation, pursuant to subsection 21.1, above, or subsection 21.3.4, below, may, by mutual consent, be submitted to alternate dispute resolution. In the event voluntary alternate dispute resolution is not agreeable, either party may proceed before any regulatory agency or court of competent jurisdiction. In the event a proceeding is brought before the Commission requesting an expedited exercise of its arbitration procedures, which may be opposed, and the request is granted,

MAY 13 2004

the expedited arbitration of such dispute may occur no later than sixty (60) days from the date of submission of responsive pleadings. During any proceeding each Party shall continue to perform its obligations under this Agreement provided, however, that neither Party shall be required to act in any unlawful fashion.

21.3 Disputes arising under Part C, Attachment X shall be resolved in accordance with Part C, Attachment X, Section 6, Dispute Resolution.

21.4 Billing Disputes

21.4.1 Any party disputing any bill for interconnection, services, or network elements received pursuant to this agreement shall tender timely payment for the disputed amount. Such payment shall be accompanied by a Billing Protest, which shall set forth (1) the amount alleged to be improperly billed and (2) the specific reasons, legal and factual, establishing why the amount may have been improperly billed. The billing party shall provide a Response to such Billing Protest within 30 days. The billing party shall either accept or deny the Protest.

21.4.2 If the Protest is accepted, the billing party shall return the amount improperly billed within the 30 days required for its Response, with interest. If the Protest is denied, the billing party shall set forth in its Response its specific reasons, legal and factual, establishing why the disputed amount was properly billed. If the Protest is accepted in part and denied in part, the billing party shall return any undisputed amount within the 30 days required for its Response, with interest, and set forth in its Response its specific reasons, legal and factual, establishing why the remaining disputed amount has been properly billed.

21.4.3 Interest shall be assessed at the statutory rate set forth in AS 09.30.070.

21.4.4 Receipt of Billing Protest shall give rise to an immediate obligation of the parties to designate senior managers to confer and attempt to resolve the matter. If the Billing Protest has not been resolved within 20 days after a Response to the Billing Protest has been sent, the parties shall undertake mediation pursuant to §22.3 of this Agreement. Should any court or commission of competent jurisdiction subsequently determine that any amount tendered pursuant to a Billing Protest has been improperly billed and paid, the billing party shall repay the amount, with interest, from the time it was paid.

Section 22 Taxes

Any Federal, state or local excise, license, sales, use, or other taxes or tax-like charges (excluding any taxes levied on income) resulting from the performance of this Agreement shall be borne by the Party upon which the obligation for payment is imposed under applicable law, even if the obligation to collect and remit such taxes is placed upon the other party. Any such taxes shall be shown as separate items on applicable billing

documents between the Parties. The Party obligated to collect and remit taxes shall do so unless the other Party provides such Party with the required evidence of exemption. The Party so obligated to pay any such taxes may contest the same in good faith, at its own expense, and shall be entitled to the benefit of any refund or recovery, provided that such party shall not permit any lien to exist on any asset of the other party by reason of the contest. The Party obligated to collect and remit taxes shall cooperate fully in any such contest by the other Party by providing records, testimony and such additional information or assistance as may reasonably be necessary to pursue the contest.

Section 23 Responsibility for Environmental Hazards

23.1 GCICC shall in no event be liable to ACS-F for any costs whatsoever resulting from the presence or release of any Environmental Hazard that GCICC did not cause, introduce or contribute to the affected work location. ACS-F hereby releases, and shall also indemnify, defend (at GCICC 's request) and hold harmless GCICC and each of GCICC 's officers, directors and employees from and against any losses and expenses that arise out of or result from any Environmental Hazard that ACS-F, its contractors, or its agents introduce to the work locations.

23.2 Prior to GCICC or its employees, contractors, or agents introducing an Environmental Hazard into a work location GCICC shall fully inform ACS-F in writing of its planned actions at such work location and shall receive ACS-F's written permission for such actions and GCICC warrants that it shall comply with all legal and regulatory obligations it has with respect to such Environmental Hazard and notices it is required to provide with respect thereto. ACS-F shall in no event be liable to GCICC for any costs whatsoever resulting from the presence or release of any Environmental Hazard that GCICC causes, introduces or contributes to the affected work location. GCICC shall indemnify, defend (at ACS-F's request) and hold harmless ACS-F and each of ACS-F's officers, directors and employees from and against any losses and expenses that arise out of or result from any Environmental Hazard that GCICC, its contractors or its agents cause, introduce, or contribute to the work location. GCICC shall be responsible for obtaining, including payment of associated fees, all environmental permits, licenses and/or registrations required for environmental hazards GCICC causes or introduces to the affected work location.

23.3 In the event any suspect material within ACS-F-owned, operated or leased facilities are identified to be asbestos-containing, GCICC will, at GCICC 's expense, notify ACS-F before commencing any activities and ensure that to the extent any activities which it undertakes in the facility disturb any asbestos-containing materials (ACM) or presumed asbestos containing materials (PACM) as defined in 29 CFR Section 1910.1001, such GCICC activities shall be undertaken in accordance with applicable local, state and federal environmental and health and safety statutes and regulations. Except for abatement activities undertaken by GCICC or equipment placement activities that result in the generation or disturbance of asbestos containing material, GCICC shall not have any responsibility for managing, nor be the owner of, nor have any liability for,

or in connection with, any asbestos containing material. Both Parties agree to immediately notify the other if the Party undertakes any asbestos control or asbestos abatement activities that potentially could affect GCICC equipment or operations, including, but not limited to, contamination of equipment.

23.4 Within ten (10) business days of GCICC 's request for any space in ACS-F owned or controlled facility, ACS-F shall provide any information in its possession regarding the known environmental conditions of the space provided for placement of equipment and interconnection including, but not limited to, the existence and condition of any and all known or suspected asbestos containing materials, lead paint, hazardous or regulated substances, or any evidence of radon. Information is considered in ACS-F's possession under this Agreement if it is in the possession of an employee, agent, or authorized representative of ACS-F.

23.5 If the space provided for the placement of equipment, interconnection, or provision of service contains known environmental contamination or hazardous material, particularly but not limited to hazardous levels of friable asbestos, lead paint or hazardous levels of radon, which makes the placement of such equipment or interconnection hazardous, ACS-F shall offer an alternative space, if available, for GCICC 's consideration. If interconnection is complicated by the presence of environmental contamination or hazardous materials, and an alternative route is available, ACS-F shall make such alternative route available for GCICC 's consideration.

23.6 Subject to this Section 24 and to ACS-F's standard security procedures, which procedures will be provided to GCICC, ACS-F shall allow GCICC at GCICC 's expense to perform any environmental site investigations, including, but not limited to, asbestos surveys, which GCICC deems to be necessary in support of its collocation needs. GCICC agrees to share the results of such investigations or surveys with ACS-F.

Section 24 Amendments and Modifications

No provision of this Agreement shall be deemed waived, amended or modified by either party unless such a waiver, amendment or modification is in writing, dated, and signed by both Parties.

Section 25 Severability

Subject to Section 2 - Regulatory Approvals, if any part of this Agreement is held to be invalid for any reason by a regulatory agency or court having jurisdiction, such invalidity will affect only the portion of this Agreement which is invalid. In all other respects this Agreement will stand as if such invalid provision had not been a part thereof, and the remainder of the Agreement shall remain in full force and effect.

MAY 1 8 2004

Section 26 Headings Not Controlling

The headings and numbering of Sections, Parts and Attachments in this Agreement are for convenience only and shall not be construed to define or limit any of the terms herein or affect the meaning or interpretation of this Agreement.

Section 27 Entire Agreement

This Agreement sets forth the entire understanding and supersedes prior agreements between the Parties relating to the subject matter contained herein and merges all prior discussions between them, and neither Party shall be bound by any definition, condition, provision, representation, warranty, covenant or promise other than as expressly stated in this Agreement or as it contemporaneously or subsequently set forth in writing and executed by a duly authorized officer or representative of the Party to be bound thereby.

Section 28 Counterparts

This Agreement may be executed in counterparts. Each counterpart shall be considered an original and such counterparts shall together constitute one and the same instrument.

Section 29 Successors and Assigns

This Agreement shall be binding upon, and inure to the benefit of, the Parties hereto and their respective successors and permitted assigns.

Section 30 Implementation Team

30.1 The parties agree to establish an Implementation Team within 30 days of approval of this agreement by the Commission. The purpose of the Team will be to identify and develop supplemental processes, operational procedures, and guidelines to implement the terms of this Agreement.

30.2 In establishing this Team the parties recognize that technical and operational coordination between the parties will be required to implement the arrangements and provisions of services established by this agreement. The parties further recognize that the many technical and operational procedures cannot be fully anticipated or resolved in advance of actual interconnection; and that, for many reasons, including the possible need to address interconnection with other interconnecting carriers, the procedures employed may change over time. The parties further recognize that they have a common interest in implementing this agreement in a practical and efficient manner, and in establishing a process for this purpose.

30.3 The Team will consist of two or more representatives of each company, to be designated in writing, who shall be familiar with the various operations of the parties

established or required by this agreement. Either Party may include in meetings or activities, additional technical specialists or individuals as may be reasonably required to address a specific task, matter, or subject. Each Party may replace its Team members at any time upon written notice to the other Party.

30.4 Within one hundred twenty (120) days after the Approval Date, the implementation arrangements made by the Implementation Team insofar as they do not constitute an amendment, modification, or material clarification of this Agreement shall be documented in an Operations Manual. Should there be a conflict between the terms of this Agreement and the Operations Manual, the terms of this Agreement shall control. The manual may address the following matters and may address any other matters agreed upon by the Implementation Team:

- the administration and maintenance of the interconnecting networks
- disaster recovery and escalation provisions;
- access to Operations Support Systems functions provided hereunder, including gateways and interfaces;
- single points of contact for ordering, provisioning, billing and maintenance;
- service ordering and provisioning procedures, including provision of the trunks and facilities;
- conditioning and provisioning of collocation space and maintenance of collocated equipment;
- joint systems readiness and operational readiness plans;
- appropriate testing of services, equipment, facilities and Network Elements;
- procedures for coordination of local PIC changes and processing;
- physical and network security concerns;
- such other matters specifically referenced in this Agreement that are to be agreed upon by the Implementation Team; and
- 911 and E911 processes and procedures.

30.5 In the event that the Implementation Team cannot agree upon any matter, that matter may be referred to a senior manager of each company designated for this purpose. The managers shall then confer and seek to resolve the matter.

30.6 The parties further agree that any other CLEC entering any market with respect to any interconnection, services, or elements subject to this agreement, will have the right and opportunity to participate in the Implementation Team with respect to any such interconnection, services or elements.

30.7 The obligations set forth in this Agreement are not dependent upon the completion of the Operations Manual, or the participation by, or agreement of, another CLEC under section 31.6. Nothing in this section is intended to alter any existing legal obligation or remedy of any party, or to modify any other term of this Agreement. However, should the Implementation Team agree that amendment of this Agreement may be appropriate or necessary in order to accomplish its purposes in a more practical manner, the Team shall recommend such an amendment be promptly considered by the parties.

Section 31 Joint Work Product

This Agreement is the joint work product of representatives of the Parties. For convenience, it has been drafted in final form by one of the Parties. Accordingly, in the event of ambiguities, no inferences will be drawn against either Party solely on the basis of authorship of this Agreement.

Section 32 Parity of Service

ACS-F shall perform its obligation and duties under the Agreement, and will provide services and network functions and elements, including, but not limited to, Local Interconnection, Services for Resale, and Network Elements, with a non-discriminatory, non-preferential quality of service, and a level of performance at parity with that which it uses for its own operations or the operations of its affiliates or for the provision of services to its own subscribers, or the subscribers of its affiliates. Notwithstanding the foregoing, the Parties agree that the terms of Part C, Attachment X shall apply as written.

MAY 1 0 2004

IN WITNESS WHEREOF, each of the Parties has caused this Agreement to be executed by its duly authorized representatives.

GCI Communication Corp.	**ACS of Fairbanks, Inc.**
By: Rick Hitz	By: K. L. Sprain
Name: Rick Hitz	Name: Ken Sprain
Title: VP, Regulatory, Finance, and Economics	Title: Sr. Vice President Operations
Date: 5/18/04	Date: 5-18-04

MAY 1 3 2004

PART B – DEFINITIONS

For any term which is not defined in this Part B or elsewhere in this Agreement, the term shall have the meaning set forth in the Telecommunications Act of 1934, as amended, the Regulations of the Federal Communications Commission and the Regulatory Commission of Alaska, and the definitions as typically used within the telecommunications industry, such as those defined by the American National Standards Institute (ANSI), Bellcore and CCITT (Consultative Committee on International Telegraphy and Telephony).

"911 SERVICE" shall have the meaning set forth in 47 C.F.R. § 54.101(a)(5).

"AFFILIATE" shall have same meaning as "AFFILIATED INTERESTS" as set forth in A.S. 42.05.990(1).

"ANI" (AUTOMATIC NUMBER IDENTIFICATION) shall have the meaning set forth in 47 C.F.R. § 20.3.

"APPROVAL DATE" is the date on which Commission approval of the Agreement is granted.

"ATTACHMENT" is any placement of GCICC's facilities in or on ACS-F's Poles, ducts, conduits, or Right of Way.

"BUSINESS DAY(S)" means the days of the week excluding Saturdays, Sundays, and all state legal holidays. Notwithstanding the foregoing, the term "Days" shall be applied in Part C, Attachment X, as defined therein.

"CENTRAL OFFICE SWITCH" or "CENTRAL OFFICE" means a switching entity within the public switched network, including but not limited to end office switches and Tandem Office Switches.

"CENTREX" means a Telecommunications Service associated with a specific grouping of lines that uses central office switching equipment for call routing to handle direct dialing of calls, and to provide numerous private branch exchange-like features.

"CLEC" means a Competitive Local Exchange Carrier.

"E911" (ENHANCED 911 SERVICE) shall have the meaning set forth in 47 C.F.R. § 54.101(a)(5).

"ENVIRONMENTAL HAZARD" means any substance the presence, use, transport, abandonment or disposal of which (i) requires investigation, remediation, compensation, fine or penalty under any Applicable Law (including, without limitation, the Comprehensive Environmental Response Compensation and Liability Act, Superfund Amendment and

Reauthorization Act, Resource Conservation Recovery Act, the Occupational Safety and Health Act) or (ii) poses risks to human health, or the environment and is regulated under any Applicable Law.

"EXTENDED OUTAGE", as used in the Pre-ordering, Ordering, and Provisioning section of this agreement, is defined to be a planned or unplanned outage during normal operating hours such that GCICC is unable to utilize electronic interfaces for more than four (4) consecutive business hours.

"FEEDER DISTRIBUTION INTERFACE" is where the trunk line or "feeder", leading back to the central office, and the "distribution" plant, branching out to the subscribers, meet, and "interface".

"GRANDFATHERED SERVICES" shall be those services referenced in 47 C.F.R. 51.615.

"HIGH FREQUENCY LOOP" shall have the meaning set forth in 47 C.F.R. 51.319 (h)

"LSR" shall mean Local Service Request.

"NETWORK ELEMENT" shall have the meaning set forth in 47 U.S.C. § 153(29).

"NP" (NUMBER PORTABILITY) shall have the meaning set forth in 47 U.S.C. § 153(30).

"OBF" means the Ordering and Billing Forum, which functions under the auspices of the Carrier Liaison Committee (CLC) of the Alliance for Telecommunications Industry Solutions (ATIS).

"OPERATOR SERVICES" shall have the meaning set forth in 47 U.S.C. § 226(a)(7).

"POLE" refers to ACS-F Poles and anchors and does not include poles or anchors with respect to which ACS-F has no legal authority to permit attachments by other persons or entities.

"PROVISIONING" shall have the meaning set forth in 47 C.F.R. 51.5.

"REAL TIME" means the actual time in which an event takes place, with the reporting on or the recording of the event simultaneous with its occurrence. In data processing or data communications, "real time" means the data is dispatched for processing the moment it enters a computer, as opposed to BATCH processing, where the information enters the system, is stored and is operated on a later time.

"SHARED TRANSPORT" shall have the meaning set forth in 47 C.F.R. § 51.319(d)(1)(ii).

"SIGNAL TRANSFER POINT" or "STP" shall have the meaning set forth in 47 C.F.R. 51.5.

"SUB-FEEDER" is a portion of the trunk line, or "feeder", that can be accessed without removing a splice case to reach the wire or fiber with-in.

MAY 3 0 2004

"SWITCH" means a Central Office Switch as defined in this Part B.

"TECHNICALLY FEASIBLE" shall have the meaning set forth in 47 C.F.R. § 51.5.

"TELECOMMUNICATIONS" shall have the meaning set forth in 47 U.S.C. § 153(44).

"TELECOMMUNICATION SERVICES" shall have the meaning set forth in 47 U.S.C. § 153(44).

"UNBUNDLED NETWORK ELEMENT" shall have the meaning set forth in 47 U.S.C. § 251©(3) (with regard to unbundled access).

MAY 3 0 2004

PART C – ATTACHMENT I

TABLE 1

Section 1 *Fairbanks/Juneau Rate Sheet*

Fairbanks/Juneau Rate Sheet

REQUIREMENTS	Fairbanks	Juneau
1.1 Loop		
1. 2-Wire Loop, $ / loop / month through December 31, 2004	$ 19.19	$ 16.71
2-Wire Loop, $ / loop / month effective January 1, 2005	$ 23.00	$ 18.00
2. Subloop, all $ / loop / month		
a. Loop Feeder	$ 1.71	$1.78
b. Loop Distribution	$ 12.89	$ 10.81
c. Loop Concentrator/Multiplexer	$ 4.06	$ 3.63
d. Network Interface Device (NID)	$ 0.53	$ 0.49
3. DSL Loop, $ / loop / month through December 31, 2004	$ 19.19	$ 16.71
DSL Loop, $ / loop / month effective January 1, 2005	$ 23.00	$ 18.00
4. DSL Shared Line, $ / loop / month	$ 9.60	$ 8.36
5. End Office Switching, $ / switched minute		
a. Line Port, $ / line / month	$ 1.38	$ 1.57
b. Non-Line Port, $ / actual minute	$ 0.00203	$ 0.00243
6. Common Transport, $ / minute	$ 0.00023	$ 0.00026
7. Direct Transport, $ /minute	$ 0.00030	$ 0.00036
8. Tandem Switching, $ / minute	$ 0.00155	$ 0.00148
9. Signaling Links, $ / link / month	$ 54.11	$ 55.72
10. Signal Transfer Point (STP), $ / signaling message	$ 0.000090	$ 0.000110
11. Service Control Point (SCP), $ / query (See footnote 1)	$ 0.00097	$ 0.00114

1.2 Collocation

1. Collocation		

[1] Price for SCP does not include transport to and from SCP. Does not include services from a third party data base.

MAY 1 3 2004

Quote Preparation Fee, NRC	$ 2,083.99	$ 2,017.32
Floor Space: $ / Sq. Foot / Month	$ 9.53	$ 19.05
CO Build-Out	ICB	ICB
2. Cable Vault		
Splicing Copper (100pr.), NRC	$ 71.41	$ 74.51
Splicing Fiber (2 strands), NRC	$ 20.39	$ 21.27
3. Splice Testing		
Copper (100pr.), NRC	$ 9.26	$ 9.66
Fiber (2 strands), NRC	$ 5.12	$ 5.34
4. Cable Pull from		
Manhole to Cable Vault, NRC	$ 3,651.42	$ 3,810.06
" , $ / month	$ 78.14	$ 81.54
Cable Vault to the Trans. Node, NRC	$ 5,477.14	$ 5,715.08
" , $ / month	$ 15.40	$ 16.07
5. Entrance Facility		
Copper (100pr.), NRC	$ 202.78	$ 211.59
" , $ / month	$ 32.33	$ 36.68
Fiber (2 strands), NRC	$ 202.78	$ 211.59
" , $ / month	$ 28.21	$ 32.00
6. 48 volts, DC (-48VDC), $ / 15amp / month	$ 153.06	$ 177.83
7. Cross Connect		
STS-x to OC-x, NRC	ICB	ICB
OC-x to OC-x, NRC	ICB	ICB
DS0, DS1, DS3, STS-x, NRC	$ 23.59	$ 24.61
8. Cable Space per 50 feet per 25 pair	ICB	ICB
Tie Cable Pull & Install (ISP Cable Pull, Install, Terminate), NRC	$ 1,143.34	$ 1,143.34
9. Rack Space and Frame Space per 1.75" by 23"	ICB	ICB
10. Optional Features and Functions, NRC	ICB	ICB
11. Operation and Maintenance, Time and Materials	ICB	ICB
12. Space Reservation Fee, NRC	$ 57.17	$ 114.33

1.3 Transport to End User (UNE Rates from WC to End User)

1. Digital Signal Level 1 (DS-1) $ / DS1 / month	$ 87.93	$ 85.42
2. Digital Signal Level 3 (DS-3), $ / DS3 / month Two components of cost: flat monthly fee to cover terminal equipment and a per foot charge to cover cost of fiber.	$ 1,919.76 + $ 0.0244 / ft for 1st DS3, additional DS3: $136.02	$ 2,014.41 + $ 0.0320 / ft for 1st DS3, additional DS3: $142.73
3. Synchronous Transport Signal 1 (STS-1) ICB Pricing	ICB	ICB
4. Synchronous Transport Signal 3 (STS-3)	ICB	ICB

ICB Pricing		

1.4 Multiplexing & DeMultiplexing

1. DS-0 to DS-1/ DS-1 to DS-0 Rate/Month	$ 219.80	$ 230.64
2. DS-1 to DS-3/ DS-3 to DS-1 Rate/Month	$ 377.50	$ 396.11
3. DS-1 to OC-1/OC-1 to DS-1 ICB Pricing	ICB	ICB
4. DS-1 to OC-3/OC-3 to DS-1 ICB Pricing	ICB	ICB
5. DS-3 to OC-3/OC-3 to DS-3 ICB Pricing	ICB	ICB
6. DS-3 to OC-12/OC-12 to DS-3 ICB Pricing	ICB	ICB
7. OC-3 to OC-12/OC-12 to OC-3 ICB Pricing	ICB	ICB

1.5 Digital Access Cross-Connect Systems (DACS)

1. DACS Port		
a. DS-1 Recurring Rate/Month	$ 42.62	$ 44.72
b. DS-1 Install NRC	$100.00	$100.00
b. DACS Port – DS-3 or STS-1 ICB	ICB	ICB
2. DACS Cross-connect		
a. DS-0 reconfiguration NRC	$36.00	$36.00
b. DS-1 reconfiguration NRC	ICB	ICB

1.6 Additional Rate Elements

1. Ducts, $ / conduit / foot / month	$ 0.146	$ 0.153
2. Dark Fiber, $ / strand / foot / month	$ 0.0122	$ 0.0160
3. OSS Capital Recovery, $ / transaction	See footnote 2	See footnote 2
4. Labor Rates Rate/Month		
Installation Foreman	$ 87.62	$ 87.62
General Plant Tech III	$ 87.46	$ 87.46
General Plant Tech II	$ 89.45	$ 89.45
Sub Foreman	$ 87.92	$ 87.92
Installer Repairman	$ 83.01	$ 83.01
Dispatch/Control Clerk	$ 62.10	$ 62.10
Plant Service Foreman	$ 88.48	$ 88.48
Group Assigner	$ 89.45	$ 89.45
Line Assigner II	$ 83.55	$ 83.55
Line Assigner I	$ 77.36	$ 77.36
Facilities Locate Clerk	$ 62.55	$ 62.55
Service Order Clerk	$ 60.82	$ 60.82

[2] The design of the final deliverable of OSS, electronic order entry, shall continue to be discussed between the parties, with weekly reports to the Commission's arbitrator. The allocation of the costs and their recovery shall be the subject of agreement between the parties, or , in the event the parties cannot agree, such matters may be presented for arbitration pursuant to RCA Order U-99-141/142/143(9)-(8/24/00).

Supervisor CO Switch Engineer	$ 77.48	$ 77.48
Engineering Assistant	$ 50.27	$ 50.27
Network Design Assistant	$ 52.37	$ 52.37
Network Design Engineer	$ 72.92	$ 72.92
Network Installation Foreman	$ 64.60	$ 64.60
Network Installation Tech	$ 75.43	$ 75.43
Network Switching Foreman	$ 80.17	$ 80.17
Network Switching Sub-Foreman	$ 77.03	$ 77.03
Network Switching Technician	$ 74.79	$ 74.79
Engineering Supervisor	$ 61.32	$ 61.32
Circuit Design Engineer	$ 68.33	$ 68.33
Transmission Engineer	$ 72.62	$ 72.62
Switching Engineer	$ 72.11	$ 72.11
Estimate Engineer	$ 102.81	$ 102.81
Engineering Foreman	$ 110.38	$ 110.38
Plant Engineer II	$ 106.92	$ 106.92
Plant Engineer I	$ 101.84	$ 101.84
Air Pressure Engineer	$ 104.97	$ 104.97
Records Engineer	$ 97.70	$ 97.70
Engineering Tech	$ 92.87	$ 92.87
Line Foreman	$ 108.17	$ 108.17
Cable Splicing Foreman	$ 107.27	$ 107.27
Cable Splicer	$ 101.68	$ 101.68
Lineman	$ 104.08	$ 104.08
Lead Construction Clerk	$ 82.76	$ 82.76
Construction Clerk	$ 80.08	$ 80.08
OSP Maintenance Foreman	$ 107.27	$ 107.27
OSP Maintenance Tech	$ 101.78	$ 101.78
Apprentice	$ 96.88	$ 96.88
Facilities Supervisor	$ 71.47	$ 71.47
Facilities Engineer	$ 70.58	$ 70.58
Contract Services Administrator	$ 58.75	$ 58.75
Facilities Project Specialist	$ 52.02	$ 52.02
Facilities Maintenance Foreman	$ 76.61	$ 76.61

Customer Service Rep	$ 69.17	$ 69.17
Line Assigner II Inside	$ 81.30	$ 81.30
Clerk Stenographer II	$ 73.38	$ 73.38

1.7 Non-Recurring Charges

1. NRC Model		
POTS/ISDN BRI Migration (TSR)	$ 1.09	$ 1.09
POTS/ISDN BRI Install (TSR)	$ 1.09	$ 1.09
POTS/ISDN BRI Migration (UNE Platform)	$ 1.09	$ 1.09
POTS/ISDN BRI Install (UNE Platform)	$ 1.09	$ 1.09
POTS/ISDN BRI Disconnect (TSR / UNE Platform)	$ 1.09	$ 1.09
POTS/ISDN BRI Migration (UNE Loop)	$ 9.87	$ 9.87
POTS/ISDN BRI Install (UNE Loop)	$ 9.59	$ 9.59
POTS/ISDN BRI Disconnect (UNE Loop)	$ 8.77	$ 8.77
Feature Changes	$ 1.09	$ 1.09
4 Wire Migration (UNE Loop)	$ 46.01	$ 46.01
4 Wire Install (UNE Loop)	$ 43.46	$ 43.46
4 Wire Disconnect (UNE Loop)	$ 34.48	$ 34.48
2 Wire Migration at the FDI	$ 44.36	$ 44.36
2 Wire Disconnect at the FDI	$ 42.98	$ 42.98
4 Wire Migration at the FDI	$ 118.14	$ 118.14
4 Wire Disconnect at the FDI	$ 82.52	$ 82.52
2 Wire Migration at 6 line NID	$ 81.97	$ 81.97
Channelized DS1 Virtual Feeder to RT Install	$ 37.91	$ 37.91
Channelized DS1 Virtual Feeder to RT Disconnect	$ 31.68	$ 31.68
DS1 Interoffice Transport Install	$ 20.27	$ 20.27
DS1 Interoffice Transport Disconnect	$ 9.05	$ 9.05
DS3 Interoffice Transport Install	$ 20.27	$ 20.27
DS3 Interoffice Transport Disconnect	$ 9.05	$ 9.05
DS1 Loop to Customer Premise Migration	$ 62.17	$ 62.17
DS1 Loop to Customer Premise Install	$ 48.41	$ 48.41
DS1 Loop to Customer Premise Disconnect	$ 37.24	$ 37.24
DS3 Loop to Customer Premise Migration	$ 57.89	$ 57.89
DS3 Loop to Customer Premise Install	$ 37.91	$ 37.91
DS3 Loop to Customer Premise Disconnect	$ 25.49	$ 25.49
Line Port (DS0, Analog, ISLU) Install	$ 9.28	$ 9.28
Line Port (DS0, Analog, ISLU) Disconnect	$ 8.73	$ 8.73
Channelized DS1 line port (TR-303-IDT) Install	$ 37.91	$ 37.91

Channelized DS1 line port (TR-303-IDT) Disconnect	$ 30.88	$ 30.88
Fiber Cross Connects Install (LGX)	$ 15.14	$ 15.14
Fiber Disconnect (LGX)	$ 16.43	$ 16.43
SS7 Links (DS0) Install	$ 51.19	$ 51.19
SS7 Links (DS0) Disconnect	$ 27.35	$ 27.35
SS7 Links (DS1) Install	$ 43.89	$ 43.89
SS7 Links (DS1) Disconnect	$ 20.25	$ 20.25
SS7 STP global title translations 'A Link' only Install	$ 46.74	$ 46.74
SS7 STP global title translations 'A Link' only Disconnect	$ 46.74	$ 46.74
SS7 STP message transfer part 'A Link' only (port) Install	$ 34.28	$ 34.28
SS7 STP message transfer part 'A Link' only (port) Disconnect	$ 33.03	$ 33.03
2. DSL Loop NRCs as stipulated:		
a. DSL EML Study 1.8 hours Engineer and .125 hours CSR	1.8 hrs Engineer, 0.125 hrs CSR	1.8 hrs Engineer, 0.125 hrs CSR
b. Field Test of Facility, no GCI participation T&M when requested	T&M	T&M
c. Field Test of Facility, GCI participation T&M when requested.	T&M	T&M
d. Removal of Bridge Taps – T&M	T&M	T&M
e. Removal of Load Coils T&M costs split 50/50	T&M	T&M
f. Remove Disturbers – T&M	T&M	T&M

1.8 Bill & Keep

1. Local to local traffic including ISP based on bill & keep	Bill & Keep	Bill & Keep

1.9 Wholesale

1. Wholesale Discount off of Retail Rates	
ACS-F	22.13%
ACS-AK – Juneau/Douglas	27.17%
ACS-AK – Greatland through December 31, 2004	21.30%
ACS-AK – Greatland effective January 1, 2005	30.00%

PART C – ATTACHMENT II

LOCAL RESALE

Section 1 Telecommunications Services Provided for Resale

At the request of GCICC, and pursuant to the requirements of the Act, and FCC and Commission Rules and Regulations, ACS-F shall make available to GCICC for resale Telecommunications Services that ACS-F currently provides or may provide hereafter at retail to subscribers who are not telecommunications carriers. The Telecommunications Services provided by ACS-F to GCICC pursuant to this Attachment II are collectively referred to as "Local Resale."

Section 2 General Terms and Conditions

2.1 Pricing
The prices charged to GCICC for Local Resale are set forth in Attachment I of this Agreement.

2.2 Grandfathered Services
ACS-F shall offer for resale to GCICC all Grandfathered Services solely for the existing grandfathered base.

2.3 Contract Service Arrangements, Special Arrangements, and Promotions
ACS-F shall offer for resale with the wholesale discount all of its Telecommunications Services available at retail to subscribers who are not Telecommunications Carriers, including but not limited to Contract Service Arrangements (or ICB), Special Arrangements (or ICB), and Promotions in excess of ninety (90) days, all in accordance with TCA, FCC and Commission Rules, Regulations, and tariffs.

2004

PART C – ATTACHMENT III

NETWORK ELEMENTS

Section 1 General

Pursuant to the following terms, ACS-F will unbundle and separately price and offer Unbundled Network Elements and Sub-elements such that GCICC will be able to subscribe to and interconnect to whichever of these unbundled elements GCICC requires for the purpose of providing local telephone service and exchange access service.

Section 2 Unbundled Network Elements

2.1 Network Elements

ACS-F shall offer Network Elements to GCICC for the purpose of offering Telecommunications Services. ACS-F shall offer Network Elements to GCICC on an unbundled basis on rates, terms and conditions that are just, reasonable, and non-discriminatory in accordance with the terms and conditions of the Agreement. The initial set of Network Elements includes:

a. Local Loop and Sub-Loop Elements

b. High Frequency Loop

c. Local Switching

d. Local Tandem Switching

e. Interoffice Transport

f. Signaling Networks and Call Related Databases

g. Transmission Facilities

h. Rights-of-Way, Ducts, Conduits, and Poles

i. Collocation

j. Operations Support Systems

k. Signaling Systems and Call-Related Databases

2.2 Network Elements Feature Functions

GCICC may use one or more Network Elements to provide any feature, function, capability, or service option that such Network Element(s) is technically capable of providing, subject to the requirements of the Act and the Commission's rules.

2.3 Standards for Network Elements

Each Network Element provided by ACS-F to GCICC shall be at parity with the quality of design, performance, features, functions, capabilities and other characteristics, including but not limited to levels and types of redundant equipment and facilities for power, diversity and security, that ACS-F provides to itself, ACS-F's own subscribers, to a ACS-F Affiliate and/or its subscribers, or to any other entity.

2.4 Combinations of Unbundled Network Elements

2.4.1 ACS-F shall provide Unbundled Network Elements in a manner that allows GCICC to combine such network elements in order to provide a telecommunication service.

2.4.2 When GCICC orders Network Elements that are currently connected ACS-F shall ensure Network Elements remain connected and functional without any disconnection or disruption. This shall be known as the combination of Network Elements. There shall be no charge for such pre-existing connections.

2.4.3 Combinations (including those that replicate ACS-F end-user services) shall be priced at a level no greater than the sum total of the individual unbundled network element prices, including nonrecurring charges.

2.5 Unbundled network element-platform ("UNE-P") Availability

2.5.1 ACS-F agrees that it will continue to provide GCICC with access to UNE-P, including access to unbundled local switching, dedicated and shared transport, and signaling, for any unbundled local loop that GCICC cannot access directly at any current GCICC collocation, or indirectly at any current GCICC collocation via a universal digital loop concentrator or a remote switching device that is currently equipped to accommodate multi-hosting, in the Fairbanks study area. For the purposes of this Agreement, the current GCICC collocations in Fairbanks are Globe and Greenwood.

2.5.2 The terms of Section 2.5.1 apply notwithstanding any change of law governing access to unbundled network elements, including any provisions of the *Triennial Review Order*, any subsequent FCC rulemaking, the United States Court of Appeals for the D.C. Circuit decisions in *United States Telecom. Ass'n v. FCC*, 290 F.3d 415 (D.C. Cir. 2002), *United States Telecom. Ass'n v. FCC*, 359 F.3d 554 (D.C. Cir. 2004), and any subsequent court decisions.

2.5.3 The Parties agree that ACS-F will process and provision all GCI orders for unbundled network elements in the Fairbanks study area as of June 30, 2004, and the restrictions on GCI access to unbundled network elements set forth in RCA Docket Nos. U-97-82, U-97-143, Order No. 15, and U-97-144, Order No. 16 shall no longer apply.

Section 3 Local Loop and Sub-Loop Elements

3.1 Definitions

3.1.1 A "Loop" is a transmission path between the main distribution frame, or its equivalent, and the demarcation point at a customer's premises. This includes, but is not limited to, two-wire copper or carrier derived analog voice-grade loops, and two-wire loops that are conditioned to transmit the digital signals needed to provide services such as ISDN, xDSL, and DS-1.

3.1.2 Unbundled Local Loop ("ULL") Types

3.1.2.1 Analog 2W Loop: A two-wire copper loop or carrier derived transmission facility that meets the performance and maintenance response requirements listed in Table 3.1.

3.1.2.2 Basic Rate ISDN Loop: A two wire copper loop which supports digital transmission of Basic Rate ISDN service and meets the performance and maintenance response requirements of Table 3.1.

3.1.2.3 HDSL Loop: A two-wire copper loop which supports digital transmission of HDSL signals and meets the performance and maintenance response requirements of Table 3.1. HDSL service provides for bi-directional transmission of data at speeds up to 1.544 Mb/s.

3.1.2.4 ADSL – Low Speed Loop: A two-wire copper loop which supports digital transmission of ADSL low speed signals and meets the performance and maintenance response requirements of Table 3.1. ADSL low speed service provides asymmetrical transmission of up to 1.54 Mb/s downstream and up to 512 kb/s upstream.

3.1.2.5 ADSL – High Speed Loop: A two-wire copper loop which supports digital transmission of ADSL high speed signals and meets the performance and maintenance response requirements of Table 3.1. ADSL high speed service provides asymmetrical transmission of up to 6 Mb/s downstream and up to 1.54 Mb/s upstream.

3.1.2.6 SDSL Loop: A two-wire copper loop which supports digital bi-directional transmission of SDSL signals and meets the performance and

maintenance response requirements of Table 3.1.. SDSL (symmetric or single pair digital subscriber loop) supports symmetrical upstream and down stream data rates.

3.1.2.7 HDSL-2 Loop: A two-wire copper loop which supports digital transmission of HDSL signals and meets the performance and maintenance response requirements of Table 3.1. HDSL service provides for bi-directional transmission of data at speeds up to 1.544 Mb/s.

3.1.2.8 MVL Low-Speed Loop: A two-wire copper loop which supports digital transmission of MVL signals and meets the performance and maintenance response requirements listed in Section 3, Table 3.1. MVL Low-Speed service provides bi-directional transmission of data at speeds up to 192 kb/s nominally.

3.1.2.9 MVL Medium-Speed Loop: A two-wire copper loop which supports digital transmission of MVL signals and meets the performance and maintenance response requirements listed in Section 3, Table 3.1. MVL Medium-Speed service provides bi-directional transmission of data at speeds up to 384 kb/s nominally.

3.1.2.10 MVL High-Speed Loop: A two-wire copper loop which supports digital transmission of MVL signals and meets the performance and maintenance response requirements listed in Section 3, Table 3.1. MVL High-Speed service provides bi-directional transmission of data at speeds up to 640 kb/s nominally.

3.1.2.11 SHDSL Loop: is a two-wire copper loop which supports digital transmission of SHDSL signals and meets the performance and maintenance response requirements listed in Table 3.1. SHDSL service provides for symmetrical transmission of data at speeds up to 2.36 Mb/s.

3.1.2.12 Future DSL Loop types. As new services and technologies evolve (e.g. VDSL) requiring loops with performance metrics not set forth in Table 3.1, the parties agree to jointly define the loop specifications and maintenance response times.

3.1.2.13 Shared Line: means the provision of xDSL-based service by a LEC and voiceband service by another LEC on the same loop. A shared line loop is a DSL-qualified loop that will meet the performance and maintenance response requirements listed in Table 3.1 for the type of DSL service provided. [Presently the only known DSL technologies that support Shared Line provisioning are High-speed and Low-speed ADSL and certain types of SDSL (Paradyne's MVL and Lucent's Superline). In the future other DSL types may also support Shared Line provisioning.]

Table 3.1

Ordering Code	Loop Type	Technical Standard	Char. Freq.	Loss @ Char. Freq.	Noise	Bridge Tap Allowed
VG	Analog 2W	N/A	1 kHz	<8 dB	<20dBrn C	YES
DSL-1	Basic Rate ISDN and MVL – Low Speed	ANSI T1.601 TR-NWT-000393 Note 8	40 kHz	<42 dB	<40 dBrn E Filter	Note 5
DSL-2	HDSL (1.5 Mbps) SDSL (768 kbps)	ANSI T1E1.4 TR 28 ITU G.991.1 *TA-NWT-001210*	196 kHz	<35 dB	<40 dBrn F Filter	Note 5
DSL-3	ADSL – Low Speed	ITU G.992.2 (Formerly G.lite)	300 kHz	<60 dB	<40 dBrn G Filter	Note 5
DSL-4	ADSL – High Speed	ITU G.992.1 ANSI T1.413 ISS. 2	1.1 MHz	<77 dB	<40 dBrn G Filter	Note 5
DSL-5	SDSL 4 Lines	TBD	65 kHz	<46 dB	TBD f Filter	Note 5
DSL-6	SDSL 6 Line	TBD	98 kHz	<41 dB	TBD F Filter	Note 5
DSL-7	HDSL-2 Note 9	ANSI T1E1.4 HDSL2	196 kHz	<35 dB	TBD F Filter	Note 5
DSL-8	MVL – Med. Speed	ANSI T1.601 TR-NWT-000393 Note 8	40 kHz	<34 dB	<40 dBrn E Filter	Note 5
DSL-9	MVL – High Speed	ANSI T1.601 TR-NWT-000393 Note 8	40 kHz	<20 dB	<40 dBrn E Filter	Note 5
DSL-10	SHDSL 192 kbps to 2.32 Mbps	ITU G.SHDSL (Working Title)	TBD	TBD	TBD	Note 5

MAY - 2 2004

The following notes pertain to Table 3.1

Note 1: All loop types will meet IEEE 820-1984 standards.

Note 2: All loop types will have a longitudinal balance of 60 dB minimum.

Note 3: All loop types will be free of unwanted grounds, loose connections, and foreign DC voltages.

Note 4: With the exception of the Analog 2W loop, all loop types will be free of load coils and any type of pair-gain equipment.

Note 5: With the exception of the Analog 2W loop, total bridge tap not to exceed 2,500 ft. with no single bridge tap greater than 2,000 ft. and no bridge tap within 100 ft. of either end.

Note 6: All loop types will be annotated in ACS-F's facilities database by loop type for cable and spectral management purposes.

Note 7: E Filter: 1 kHz – 50 kHz F Filter: 5 kHz – 245kHz
G Filter: 20 kHz – 1100kHz

Note 8: These standards referenced are for ISDN BRI. Paradyne MVL is proprietary. However, MVL equipment complies with the frequency and signal power limits and operates within the permissible power spectral density mask for ISDN BRI equipment defined in ANSI T1.601. Paradyne MVL was granted FCC Part 68 compliance based upon this technical specification conformance.

Note 9: HDSL-2 as it exists in pre standard versions by some manufacturers (such as PairGain) is listed here in DSL-7 with the same parameters as DSL-2. HDSL-2 is listed separately to allow for changes once ANSI T1E1.4 HDSL2 is finalized.

Note 10: As new services and technologies evolve (e.g. VDSL) requiring loops with performance metrics not listed in this table or as the specifications change or evolve for those types of DSL listed, the parties agree to work together to jointly define new or modify currently listed loop specifications and modify the entries in this table as necessary to meet the service requirements for each loop type.

3.2 Integrated Digital Loop Carrier (IDLC)

3.2.1 Where ACS-F uses Integrated Digital Loop Carriers (IDLC) or similar remote devices, ACS-F will, where technically feasible, offer GCICC the opportunity to access UNE Loops. UNE Loop access will be through either

physical or adjacent collocation of a GCICC DLC, purchase of UNE switching in combination with the UNE Loop, Universal access to ACS-F's IDLC, Integrated Network Architecture (INA) access to ACS-F's IDLC, GR-303 or TR-008 Mode 1 multi-hosted access, or copper plant bypassing ACS's IDLC (typical UNE Loop) where copper is available.

3.2.2 The parties are currently testing Integrated Network Architecture Access and TR-008 mode 1 as an interface for GCICC to access UNE Loops where ACS-F uses IDLC's. Depending on the outcome of these tests and if these methods are technically feasible and capable of being implemented without hardware or software changes ACS-F will make these interfaces available to GCICC.

3.2.3 The parties agree that multi-hosting of Advanced Fiber Communications' IDLC's through GR-303 interfaces at this time is not technically feasible; however, the parties recognize that as hardware and software develop this may change. If the interfaces become technically feasible and capable of being implemented, ACS-F agrees to offer this interface to GCICC. Prior to implementing and GR-303 equipment multi-hosting arrangement, the parties agree to conduct testing to validate technical feasibility and implementation capabilities. If, upon completion of the testing, it is agreed that feasibility and implementation are acceptable to the parties, then ACS-F will offer these interfaces to GCICC. Disagreements regarding technical or implementation feasibility may be escalated by either party for resolution via the Dispute Resolution process.

3.3 Sub-loop Network Elements

The following sub-loop network elements are combinations of loop sub-elements and shall be orderable in the area covered by this contract and provisionable with the same or substantially similar processes and at the same intervals as Analog 2W loops.

3.3.1 "FEEDER FACILITIES" means the outside plant facilities (physical or derived) between the host central office and the Serving Area Interface (SAI), Feeder Distribution Interface (FDI) or Concentrator. Where Feeder Cable has been displaced or reinforced with a Concentrator and the Concentrator is deployed in Universal or Integrated Mode, a 'derived' feeder pair can be unbundled as a loop sub-element. Feeder (physical or derived) includes the termination on the central office Main Distribution Frame (MDF) and the SAI or FDI. Integrated mode interface at the Central Office is at the DSX1 level for dual host mode Integrated Digital Loop Carrier systems.

3.3.2 "DISTRIBUTION FACILITIES" means the facilities between the Serving Area Interface (SAI) or Feeder Distribution Interface (FDI) and Network Interface Device (NID) at the customer premises. Distribution facilities include the distribution cable, terminations on the SAI or FDI, the terminal or pedestal, the service drop, the NID, and all cross-connects in between.

3.3.3 "NETWORK INTERFACE DEVICE" (NID) is an isolation device located at the customer's premise that serves as the demarcation point for service and provides a means for isolating the customer's inside wire from the outside plant cable system.

3.4 DSL – Qualified Loops

3.4.1 General

A DSL-qualified UNE Loop is any of the loop types as defined in the UNE definitions, "Section 3, Loop", with the exception of the loop type "Analog 2W".

3.4.2 Ordering and Provisioning

3.4.2.1 GCICC may order a "paper" transmission study to any service address to determine the feasibility of that address supporting DSL service. Such "paper" transmission study (hereinafter referred to as "EML study") will be performed by ACS-F from its outside plant records and will include the cable plant make-up of the loop to the specific service address summarizing such items as wire gauge and types by section and distance, the presence of bridge tap(s), their locations and lengths, and presence of load coils or any other transmission equipment that could affect the performance of DSL on the loop, and an Estimated Measured Loss (EML) analysis of the loop. EML analysis will be computed for all characteristic frequencies listed on Table 3.1, for all types of DSL services.

3.4.2.2 If service to a specific address is not feasible due to the presence of load coils, GCICC may request an estimate from ACS-F for the cost of removal of the load coils and the timeframe in which load coils can be removed.

3.4.2.3 Based on the outcome of the EML analysis, such analysis to have been performed within the previous 18 months, GCICC may order one or more DSL-qualified UNE Loops to a specific service address. GCICC in its order will specify the type of DSL loop(s) needed, and whether or not the DSL loop will be provisioned as a Shared Line DSL In its order to ACS-F, GCICC will also specify if it wishes to have ACS-F perform line conditioning in the form of bridge tap and/or load coil removal. ACS-F will determine the availability of cable pairs to the service location and whether or not the location can be served with the requested DSL service/loop.

a. If cable pair(s) are available and the EML indicates the loop(s) will meet the specifications for the type of loop ordered

JUL 13 2004

without line conditioning, ACS-F will provide a firm order confirmation (FOC) date to GCICC in the manner and within the timeframe set forth in Part C, Attachment X.

b. If the service address can not be served because of "no outside plant" conditions, ACS-F will notify GCICC of that information. ACS-F will, within 15 calendar days, provide GCICC with an estimated completion date for the outside plant work. As soon as possible, ACS-F will provide GCICC with a FOC date for the availability of the pair(s). GCICC can either cancel its order at this time, or request that ACS-F leave the order in OSP held order status until ACS-F can provide cable pairs to the location.

c. If cable pair(s) are available but there are spectrum management issues that do not allow the provision of the ordered DSL type, ACS-F will so inform GCICC and provide the cost to move disturbers, if practical to do so. At this time, GCICC can cancel its order or order ACS-F to move disturbers. Within 15 business days, ACS-F will provide GCICC with its FOC date for availability of the pair(s), if the order is not canceled.

3.4.2.4 For all DSL-qualified loops ACS-F will upon completion of GCICC's order, label the pair(s) at the NID at the service address and provide GCICC with line insulation test (LIT) and continuity test results. Line insulation tests check the loop for basic POTS (Analog 2W) service per Table 3.1 and include at minimum checks for the presence of foreign voltages, faults to ground, loop resistance, measured insertion loss at 1004 Hz, c-message weighted noise, and after March 31, 2001, or sooner when available, longitudinal balance. If GCICC reviews the test data or through its own testing finds that the loop does not meet the requirements of Table 3.1, GCICC will open a repair trouble ticket with ACS-F to get the loop repaired so that it meets the required limits ACS-F will again provide LIT test results at the completion of its repair of the pair(s). Billing to GCICC for the pair(s) will not start until GCICC accepts the loop test results unless GCICC fails to accept the loop or fails to open a repair trouble ticket within three business days of the Order Completion date.

3.4.2.5 If GCICC measures the loop and the actual characteristic frequency loss is greater than the limits of Table 3.1, GCICC may open a trouble ticket with ACS-F to repair the loop so that it meets the limits of Table 3.1. If ACS-F finds it must remove a bridge tap to effect repair to meet the loss predicted by the EML study or if GCICC has failed to order bridge tap removal and they should have for the particular DSL loop type ordered, such bridge tap removal will be at GCICC's expense. If ACS-F determines that it must perform a new EML study to determine the

location of a bridge tap not reflected in the current EML study, GCICC will additionally incur the cost of such new EML study. Unless bridge tap removal is required, GCICC will also be given credit for the loop until such time as the EML meets the requirements of Table 3.1.

3.4.2.6 If ACS-F cannot provide the ordered pair(s) that meets the requirements of the ordered DSL type which necessitates that GCICC cancel its order, GCICC will incur no DSL loop provisioning cost (except those costs for the EML study and transaction fee if ordered).

3.4.2.7 Charges for ordering, provisioning, testing and conditioning of DSL loops will be per the table in Part C attachment 1.. Field-testing and/or transmission studies of DSL loops will only be conducted at GCICC request. GCICC may order a change in DSL loop type for an existing DSL-qualified loop if such loop meets the technical performance requirements of Table 3.1 for the new loop type requested per the results of the EML study. DSL-qualified loops will be delivered to GCICC on a nondiscriminatory basis in the same fashion and equal to the same level of service that ACS-F provides to its own customers. ACS-F will not guarantee that any service can be delivered over the loops, but rather that they meet the specifications of Table 3.1.

3.4.2.8 GCICC may order a field test, hereinafter referred to as an AML (Actual Measured Loss), of a DSL loop. GCICC will pay the appropriate DSL test charge per the table in Part C Attachment 1. The test will include measurements listed in Table 3.1.

3.4.2.9 GCICC shall not place more than 1 DSL order and 1 EML study per serving area per day. If GCICC orders an EML study, ACS-F shall have the study returned to GCICC no more than 5 business days after GCICC places the order for the study. If the DSL loop meets specifications and doesn't need conditioning ACS-F shall deliver the DSL loop to GCICC no later than 7 days after the order is placed. If line conditioning is ordered, ACS-F will remove bridge taps within 2 weeks and load coils within 30 days. If GCICC orders cable rearrangements to clear disturbers, ACS-F will do so within two weeks. If ACS-F must effect repair activity as a result of the above provisioning process, it will do so within 2 business days.

MAY 3 2004

3.4.3 Record Keeping and Disturber Management

3.4.3.1 The GCICC DSL-qualified cable pairs will be assigned and annotated in ACS-F' Facilities Database as "DSL-qualified Loops". These loops will not be subject to any kind of future modification that would cause them to fall out of compliance with the specific DSL technical performance specifications in Table 3.1.

3.4.3.2 ACS-F will manage its outside plant with regards to spectrum compatibility of all services. GCICC DSL loops will not be subject to modifications that would cause them to fall out of compliance with the specific DSL technical performance specifications. If ACS-F needs to rearrange its plant where the potential exists to cause a GCICC DSL loop to fall out of specifications, ACS-F will obtain GCICC's concurrence prior to doing such rearrangement. The parties agree to work cooperatively on these matters.

Section 4 Local Switching

4.1 Definition

Local Switching is the Network Element that provides the functionality required to connect the appropriate lines or trunks wired to the Main Distributing Frame (MDF) or Digital Cross Connect (DSX) panel to a desired line or trunk. Such functionality shall include all of the features, functions, and capabilities that the underlying ACS-F switch providing such Local Switching function provides for ACS-F's own services. Functionality may include, but is not limited to: line signaling and signaling software, digit reception, dialed number translations, call screening, routing, recording, call supervision, dial tone, switching, telephone number provisioning, announcements, calling features and capabilities (including call processing), Centrex, or Centrex like services, Automatic Call Distributor (ACD), pre-subscription (e.g., long distance Carrier, intraLATA toll), Carrier Identification Code (CIC) portability capabilities, testing and other operational features inherent to the switch and switch software.

4.2 Technical Requirements

4.2.1 ACS-F shall provide its standard recorded announcements (as designated by GCICC) and call progress tones to alert callers of call progress and disposition. GCICC will use the Bona Fide Request process for unique announcements in accordance with Section 6 of Part A of this Agreement.

4.2.2 ACS-F shall control congestion points such as mass calling events, and network routing abnormalities, using capabilities such as Automatic Call Gapping, Automatic Congestion Control, and Network Routing Overflow. Application of such control shall be competitively neutral and not favor any user of unbundled switching or ACS-F.

4.2.3 ACS-F shall offer all Local Switching features that are resident in the switching system for a particular serving area whether those features are offered to its own customers or not. GCICC will pay any expense that ACS-F incurs to make these features available to GCICC, when such features are not provided to ACS-F customers. To the extent ACS-F does not offer certain features to its own customers, those features shall be provided to GCICC at parity with the way they are provided by ACS-F to itself or any other party.

4.2.4 ACS-F will make available a connection from the local switch to shared transport facilities.

4.2.5 When GCICC's orders specifies that a customer is to be switched from ACS-F local service to ACS-F service resold by GCICC, the customer will become a GCICC customer without the loss or change of feature functionality unless the changes are ordered by GCICC.

4.3 Interface Requirements

4.3.1 ACS-F shall provide the following interfaces to loops:

4.3.1.1 Standard Tip/Ring interface including loopstart or groundstart, on-hook signaling (e.g., for calling number, calling name and message waiting lamp);

4.3.1.2 Coin phone signaling;

4.3.1.3 Basic and Primary Rate Interface ISDN adhering to appropriate ANSI standards and;

4.3.1.4 Two-wire analog interface to PBX to include reverse battery, E&M, wink start and DID;

4.3.1.5 Four-wire analog interface to PBX to include reverse battery, E&M, wink start and DID;

4.3.1.6 Four-wire DS1 interface to PBX or subscriber provided equipment (e.g., computers and voice response systems);

4.3.1.7 GR-303 and TR-008 interfaces to integrated digital loop carrier systems, when equipped.

4.4 ACS-F shall provide access to interfaces, including but not limited to:

4.4.1 SS7, Dial Pulse, or Multi-Frequency trunking if requested by GCICC. In the case of SS7 trunking, SS7 signaling will be provided through the ACS-F Anchorage STPs at the same rates that ACS-F charges itself (tariffed rates).

4.4.2 Interface to GCICC operator services systems or Operator Services through appropriate trunk interconnections for the system; and

4.4.3 Interface to GCICC directory assistance services through GCICC switched network or to Directory Services through the appropriate trunk interconnections for the system.

4.4.4 950 access or other GCICC required access to inter-exchange carriers as requested through appropriate trunk interfaces.

Section 5 Local Tandem Switching

5.1 Definition

A local tandem (or intermediate) switch is a switch that has direct trunks to two or more connecting switches. The connecting switches can be local end offices, mobile telephone switching offices (cellular or PCS), Interexchange Carriers, paging systems, 911 Public Service Answering Points (PSAPs) or any other type of switch that can originate or terminate telephone traffic. Remote line modules and digital loop carrier systems are not connecting switches because they are connected to the host local switch with proprietary links, not trunks. A tandem switch can route traffic between any one connecting switch and any other connecting switch. The Local tandem switch can also serve as a local end-office.

5.2 Technical Requirements

5.2.1 The requirements for Local Tandem Switching include, but are not limited to, the following:

5.2.1.1 Where ACS-F employs a local tandem switch to route calls between local switches in the same rate area, ACS-F will provide GCICC interconnection to that local tandem switch for the routing of local voice and/or data traffic to and from all connecting switches, and to and from the local tandem itself if the local tandem also serves as a local end office.

5.2.2 Tandem Switching shall preserve CLASS/LASS features and Caller ID as traffic is processed.

5.2.3 Tandem Switching shall control congestion by employing network management features such as Automatic Congestion Control and Overflow Routing. The method employed in GCICC traffic shall be at parity with controls

being provided or imposed on ACS-F traffic (e.g. ACS-F shall not restrict or block GCICC traffic and leave ACS-F's traffic unaffected or less affected.)

5.2.4 To the extent technically feasible and ordered by GCICC, the local tandem switch shall record billable events. GCICC will reimburse ACS-F for any incremental costs associated with providing this capability. ACS-F shall send the billing information to the billing center designated by GCICC.

5.3 Interface Requirements

Tandem Switching shall employ all signaling necessary to process telephone traffic with no loss of feature functionality.

Section 6 Transport

6.1 Shared Transport

6.1.1 Definition: Shared Transport is transmission facilities shared by more than one carrier, including the incumbent LEC, between end office switches, between end office switches and tandem switches, and between tandem switches, in the incumbent LEC's network.

6.1.2 ACS-F shall offer Shared Transport at DS0, DS1, DS3, STS-1 or higher transmission bit rate circuits.

6.1.3 ACS-F shall be responsible for the engineering, provisioning, and maintenance of the underlying equipment and facilities that are used to provide Shared Transport.

6.2 Dedicated Transport

6.2.1 Definition: Dedicated Transport provides a local interoffice transmission path between ACS-F and/or GCICC central offices/service node. Dedicated transport is limited to the use of a single carrier and does not require switching at a Local Tandem.

6.2.2 Technical Requirements

Where technologically feasible and available, ACS-F shall offer Dedicated Transport consistent with the underlying technology as follows:

6.2.2.1 When ACS-F provides Dedicated Transport as a circuit or a system, the entire designated transmission circuit or system (e.g., DS1, DS3, STS-1) shall be dedicated to GCICC designated traffic.

6.2.2.2 Where ACS-F has technology available, ACS-F shall offer Dedicated Transport using currently available technologies including, but

not limited to, DS1 and DS3 transport systems, SONET (or SDH) Bi-directional Line Switched Rings, SONET (or SDH) Unidirectional Path Switched Rings, and SONET (or SDH) point-to-point transport systems (including linear add-drop systems), at all available technologies and transmission bit rates.

Section 7 Transmission Facilities

7.1 Description: A Transmission Facility is comprised of one or more of the following network elements: the transport between a customer's premise and the serving central office (wire center), multiplexing, or DACS service. The transport can be a T-1 circuit or a T-3 circuit; multiplexing can be DS-1 to DS-0 or DS-3 to DS-1. DACS service includes the port(s) and one or more digital cross-connects. A Transmission Facility can also be dark fiber.

7.2 T-1 (DS-1) – North American standard for a digital transmission link with a total transmission rate of 1.544 Mb/s. The circuit may be ordered as AMI or B8ZS, D4 or ESF framing, channelized or non-channelized. Circuit may be delivered over repeated span lines, HDSL facilities, or optical carrier facilities. Demarcation is at the DS-1 level on a DSX-1 patch panel or appropriate FCC registered jack.

7.3 T-3 (DS-3) – North American standard for a digital transmission link with a total transmission rate of 44.736 Mb/s. Circuit will be delivered over optical carrier facilities. Demarcation is at the DS-3 level on a DSX-3 patch panel.

7.4 Multiplexing – The aggregation of two or more channels onto a single transmission facility. The combining of several lower fixed-bandwidth channels into a single channel with bandwidth equal to the sum of the individual channels plus any overhead. Multiplexing also includes demultiplexing which is the process of breaking down a composite signal into its constituent parts. Multiplexing can be ordered as M1/0 or M3/1. For example, multiplexing can be the aggregation of multiple DS-1 signals into a DS-3. De-multiplexing is the reverse process.

7.5 M1/0 Multiplexing – The aggregation of multiple DS-0 channels into a single DS-1 service and vice-versa.

7.6 M3/1 Multiplexing – The aggregation of multiple DS-1 channels into a single DS-3 service and vice-versa.

7.7 DACS (Digital Access Cross-connect System) – An intelligent software-based network element used to administer the assignment of channel bandwidth on digital facilities. Essentially a "switch" for which electronic cross-connections are established via an administrative process, and appropriate for supporting semi-permanent connections. Interconnection to a DACS will be via DS-1 or DS-3 ports.

7.8 Dark Fiber – A fiber optic cable strand that is leased without electronics or optronics (no connected transmitters, receivers, or regenerators).

Section 8 Right-of-Way, Conduits, and Pole Attachments

ACS-F shall make Right-of-Way, Conduit, and Pole Attachments available to GCICC as set forth in Part C – Attachment VI.

Section 9 Collocation

ACS-F shall make Collocation available to GCICC as set forth in Part C – Attachment V.

Section 10 Operations Support Systems

ACS-F shall provide access to Operations Support Systems as set forth in Part C – Attachment IV.

Section 11 Directory Assistance Service Routing

ACS-F shall provide for the routing of directory assistance calls (including but not limited to 411, 555-1212, NPA-555-1212) dialed by GCICC subscribers directly to the DA service platform of GCICC's choice.

Section 12 Operator Services Routing

ACS-F shall provide for the routing of local Operator Services calls (including but not limited to 0+, 0-) dialed by GCICC subscribers directly to the GCICC operator service platform.

Section 13 Signaling Systems and Call-Related Databases

13.1 ACS-F shall provide, and shall not impair, GCICC non-discriminatory access to signaling links, Signal Transfer Points (STPs) and Signal Control Points (SCPs), if any, in conjunction with unbundled switching, and on a stand-alone basis. The SS7 network includes, but is not limited to, signaling links and STPs.

13.2 ACS-F shall provide, and shall not impair, GCICC non-discriminatory access to SCPs and call-related databases, if any, including, but not limited to, the Line Identification Database (LIDB), Number Portability database, Calling Name (CNAM) database, Toll Free number database, Advanced Intelligent Network (AIN) databases, and the AIN platform and architecture. ACS-F is not required to unbundle access to certain AIN software that qualifies for proprietary treatment.

..AY 1 9 2004

13.3 Nondiscriminatory access to ACS-F's SS7 network shall fully support the functions of all other network elements connected to the ACS-F SS7 network. These include local switching, local tandem switching, and service control points.

13.4 Connection to ACS-F's SS7 network elements will be in accordance with industry standards using the appropriate link set types. GCICC may connect to any one or more of ACS-F's SS7 network elements.

MAY 3 0 2004

PART C – ATTACHMENT IV

GENERAL INTERCONNECTION AND OPERATIONAL REQUIREMENTS

Section 1 Procedures

1.1 Contact with Subscribers.

1.2 ACS-F and GCICC shall act as the single point of contact for their subscriber's service needs. Each shall make it clear to their subscribers that they are the service provider. ACS-F will explain to end-users that it is acting on GCICC's behalf when applicable. In those cases where GCICC or ACS-F has contact with subscribers of the other company incidental to performing services under this agreement, they shall not use the contact as an opportunity to

(i) provide information about their own products or services or

(ii) disparage or discriminate against the other carrier, its products, or services.

1.3 All subscriber inquiries solely regarding the other company's products or services will be referred to the other company. ACS-F and GCICC shall provide appropriate referrals to subscribers of the other carrier inquiring about services or products of the other carrier. Both companies shall instruct their personnel to not disparage the others products or services during such contacts.

1.4 Neither carrier shall use the other carrier's request for subscriber information, order submission, or any other aspect of processes or services provided under this agreement to aid in marketing or sales efforts.

1.5 Expedite and Escalation Procedures

1.5.1 The parties recognize that unforeseen or emergency circumstances may require expedited response times and/or escalation procedures. ACS-F and GCICC shall provide escalation and expedite methods and procedures, consistent with current practices, which may be invoked at any point in the Service Pre-Ordering, Ordering, Provisioning, Maintenance, Repair, and Subscriber Usage Data transfer processes to facilitate rapid and timely resolution for issues surrounding customer services, orders, or disputes. The methods and procedures shall provide non-discriminatory treatment. For example, where feasible, overtime technician call outs made to expedite orders will be processed anonymously, i.e. without reference to the carrier involved.

1.5.2 Within thirty (30) days after RCA Approval of this Agreement, ACS-F and GCICC will provide to each other a contact list for handling subscriber and other matters requiring attention/resolution outside of normal business procedures. ACS-F and GCICC shall notify each other of any changes to its contact list at least one (1) week before such changes are effective.

1.5.3 No later than thirty (30) days after RCA approval of this Agreement, ACS-F and GCICC shall provide each other with contingency plans for those cases in which normal processes, interfaces, or systems are inoperable. ACS-F will also provide contingency plans for those cases in which ACS-F's unbundled Network Elements, features, functions, and resale services purchased by GCICC are inoperable.

1.6 Subscriber of Record

ACS-F shall recognize GCICC as the billing Subscriber of Record for all Network Elements or services for resale ordered by GCICC and shall send all notices, invoices, and information which pertains to such ordered services directly to GCICC. GCICC will provide ACS-F with addresses to which ACS-F shall send all such notices, invoices, and information.

1.7 Service Offerings

In response to a Network Bona Fide Request, following any public notice required by law of changes to ACS-F's network, or upon GCICC's request, ACS-F shall provide GCICC with access to any new service, feature and function as soon as it is installed, tested, priced and available in the network.

1.8 Blocking Services Offered

ACS-F will make available to GCICC any and all blocking features and functions ACS-F's switch is capable of providing.

1.9 Essential Services

ACS-F shall provide priority emergency restoral for GCICC essential service lines in a nondiscriminatory manner relative to ACS-F essential service lines. Within 90 days of RCA approval of this agreement, ACS-F and GCICC shall agree on a common definition of essential service lines. Service restoral will be consistent with applicable state or federal law and regulations.

1.10 TTY/TDD

ACS-F shall cooperate with GCICC to provide Telecommunications Services at parity to serve TTY/TDD subscribers.

Section 2 Basic 911 and E 911 Emergency Service

2.1 Description

Basic 911 and E911 service provides a caller access to the appropriate emergency service bureau by dialing the 3-digit universal telephone number '911'.

2.2 General Requirements

2.2.1 Where ACS-F is the primary service provider or contractor responsible for maintaining all or part of the Basic 911 or E911 system in any service area covered under this Agreement, ACS-F and GCICC shall work cooperatively to ensure the proper interface with GCICC's Basic 911 or Enhanced 911 service and facilities. ACS-F and GCICC will provide each other with any technical specifications necessary for proper network design and a description of any special routing arrangements required to accommodate alternate routing or overflow of 911/E911 traffic.

2.2.2 As required, ACS-F shall interconnect trunks from GCICC's network to the appropriate switch, E911 system, E911 PSAP, or E911 Tandem. GCICC and ACS-F recognize that there may be hardware restrictions, such as availability of DS-1 ports, that may require sharing of facilities. Where selective routing is employed, ACS-F will ensure the proper routing of 911/E911 traffic based on data received from GCICC's network. GCICC shall ensure that its network provides the ANI and signaling information required by the appropriate switch, E911 tandem, E911 system, or E911 PSAP.

2.2.3 Trunking shall be arranged to minimize the likelihood of central office isolation where facilities and equipment are available, due to cable cuts or other equipment failures. Any GCICC 911/E911 circuits or facilities provided by ACS-F shall have physical and electrical diversity when such diversity can be achieved using existing facilities. Circuits will be divided as equally as possible across available GCICC systems. There will be an alternate means of transmitting a 911 call to a PSAP in the event of failures if provided by the PSAP.

2.2.4 All 911/E911 trunks must be capable of transmitting and receiving Baudot code or ASCII text necessary to support the use of Telecommunications Devices for the Deaf (TTY/TDDs).

2.2.5 Where GCICC or ACS-F utilize any circuit or facility from the other to access the PSAP, circuit layout records and physical routing of such facilities will be provided so that each entity can appropriately design and provision a diverse PSAP access network.

2.2.6 Where GCICC provides local service by purchasing ACS-F's services at wholesale rates and reselling it, ACS-F will ensure that 911/E911 service is available to the same extent it is for ACS-F's customers.

2.2.7 Any Basic 911 or E911 services, support, or facilities provided by ACS-F or GCICC shall be at parity with the services, support and facilities that ACS-F or GCICC provides to itself and its subscribers. In providing Basic 911 or E911 services, ACS-F and GCICC shall conform to all state regulations concerning emergency services.

2.3 Basic 911 and E911 Database Requirements

2.3.1 Where ACS-F is the primary 911-service provider or is otherwise responsible for maintaining the E911 database for any service area covered under this agreement, ACS-F will be responsible for maintaining the E911 database(s) for GCICC. GCICC shall be solely responsible for providing GCICC database records to ACS-F for inclusion in the E911 database. GCICC shall provide database records according to a format provided by ACS-F. ACS-F shall accept electronic updates from GCICC no less frequently than daily. The National Emergency Number Association ("NENA") code for GCICC is "GCICC" (GCICC followed by 2 spaces). ACS-F shall work cooperatively with GCICC to ensure the accuracy of the data transfer by verifying it against the Master Street Address Guide (MSAG). If ACS-F detects an error in GCICC provided data, the data shall be returned to GCICC within one (1) business day of the time the error was detected. GCICC shall respond to requests from ACS-F to make corrections to errors by providing corrected records within two (2) business days. ACS-F shall update the database with GCICC records within one (1) business day or with the same frequency that ACS-F updates the database with its own records, whichever is less. These time frames are guidelines and are established in the interest of public safety. ACS-F will make every effort to meet these response times; however, GCICC recognizes that seasonal impacts or other extraordinary circumstances may impact ACS-F's ability to meet these requirements. Where ACS-F is responsible for maintaining the E911 routing database for any service area covered under this agreement, ACS-F will be responsible for maintaining the E911 routing database for GCICC.

2.3.2 GCICC shall assign an E911 database coordinator charged with the responsibility of forwarding GCICC end user ANI/ALI record information to ACS-F or via a third-party entity, charged with the responsibility of ANI/ALI record transfer. GCICC assumes all responsibility for the accuracy of the data that GCICC provides to ACS-F. ACS-F and GCICC shall jointly research each ANI/ALI discrepancy report. Corrective action shall be taken immediately by the responsible party.

2.3.3 GCICC will provide the Emergency Service Bureaus with a single point of contact for inquiries about GCICC's customers.

2.3.4 Where there are multiple ANI/ALI databases involved, ACS-F will provide a single point of contact for ANI/ALI database issues.

2.3.5 ACS-F agrees to treat all data on GCICC subscribers provided under this Agreement as strictly confidential and to use data on GCICC subscribers only for the purpose of providing E911 services.

2.4 Basic 911 and E911 Maintenance

2.4.1 Each party shall be responsible for those portions of the 911 system for which it has control, including any necessary maintenance to each party's portion of the 911 System.

2.4.2 ACS-F will provide the Emergency Service Bureaus with a single point of contact for trouble reporting. ACS-F will investigate trouble reports and notify GCICC's Network Operations Control Center if ACS-F determines the problem to be in GCICC's network or facilities.

2.4.3 ACS-F shall begin restoration of any Basic 911 and/or E911 facilities for which ACS-F is responsible immediately upon notification or observation of failure or outage. ACS-F will provide priority restoration of GCICC trunks or network outages on the same terms and conditions it provides itself without imposition of Telecommunications Service Priority (TSP).

2.4.4 ACS-F shall notify GCICC's Network Operation Control Center 48 hours in advance of any scheduled testing or maintenance affecting GCICC 911 service, and provide notification as soon as possible of any unscheduled outage affecting GCICC 911 service.

2.4.5 ACS-F shall notify GCICC's Engineering Department in advance of any planned or anticipated changes to the E911 system, facilities, routing, or databases that could adversely affect GCICC's 911/E911 service or require GCICC to modify its 911/E911 network. Notification of changes that require modifications to GCICC's network shall be given sufficiently in advance to allow GCICC a reasonable amount of time to effect the modifications.

2.5 Master Street Address Guide (MSAG)

ACS-F will provide to GCICC, within 60 days of RCA approval of this agreement, and on an as-requested basis thereafter, the Master Street Address Guide or equivalent data file that is used to validate addresses where 911 services are offered in the geographic areas covered under this agreement. This information will be provided in electronic industry-standard format.

2.6 Miscellaneous Provisions

2.6.1 If a third party is the primary 911/E911-service provider to a government agency, or if a third party ever becomes the primary 911/E911-service provider to a government agency, GCICC shall negotiate separately with such third party with regard to the provision of 911/E911 service to the agency. All relations between such third party and GCICC are totally separate from this Agreement and ACS-F makes no representations on behalf of the third party.

2.6.2 If GCICC or its Affiliate ever becomes the primary 911/E911 service provider to a government agency, GCICC and ACS-F shall negotiate the specific provisions necessary for providing 911/E911 service to the agency and shall include such provisions in an amendment to this Agreement.

Section 3 LIDB

3.1 GCICC and ACS-F shall each be responsible for providing timely and accurate information to a national Line Information DataBase (LIDB) for end users receiving dial tone from that company's switch. The information to be provided is for the purposes of Call Blocking and Billing Name/Address Inquiries. In the event that the LIDB vendor contracted by either company is unable to properly maintain LIDB data on ported numbers, GCICC and ACS-F agree to exchange LIDB data electronically for subscribers with ported numbers to be included with the regular transmission of data to the vendor.

3.2 ACS-F and GCICC agree to treat all exchange of LIDB data for subscribers provided under this Agreement as strictly confidential and to use data on subscribers only for the purpose of accurately updating LIDB services.

Section 4 Pre-Ordering, Ordering, And Provisioning

4.1 General Requirements

4.1.1 Methods

ACS-F shall provide GCICC with methods to request and receive pre-order information and place service orders for the telecommunications services described in this Agreement. These methods shall allow GCICC to request and receive pre-ordering information in the same time frames as ACS-F personnel do, place service orders, receive due dates and activate services. Requirements for processing and provisioning interval metrics, reporting, and recurring cost credits are set forth in Part C, Attachment X.

4.2 Electronic Interfaces

ACS-F shall provide GCICC with electronic interfaces to receive pre-order information and, where available, place service orders. Detailed specifications of new interfaces will be determined as development occurs.

4.2.1 Non-Electronic Process

Where methods are non-electronic or electronic interfaces are temporarily unavailable, submission of data will be made in a standard format provided by ACS-F. To facilitate faster customer response times, ACS-F will accept requests for preorder information or service orders using customer service representatives connected to an automatic call distribution system or via email. ACS-F and GCICC will put into place alternative procedures for the processing of pre-order and order requests in the event of a prolonged network or system failure.

4.2.2 ACS-F shall provide detailed specifications for such methods, electronic or non-electronic, to GCICC within 30 days of RCA approval of this contract and subject to GCICC's execution of ACS-F's standard nondisclosure agreement. ACS-F will provide 90 days notice prior to implementing changes to these systems.

4.3 ACS-F and GCICC will process all pre-order and order requests in a nondiscriminatory manner. Each company will process such requests in timeframes consistent with those that exist in providing service to its own retail and other LEC customers. Notwithstanding the foregoing, ACS-F will process orders in accordance with the terms of Part C, Attachment X.

4.3.1 Offer Codes

For each switch within the area covered by this agreement, ACS-F will provide active switch offer codes to GCICC upon request.

4.4 Field Work

4.4.1 GCICC will be allowed to request the scheduling of field work during any 4 hour A.M. or P.M. period of the business day. To the extent these requests can be met, based upon workload and manpower, GCICC will be provided the requested scheduled time period. If a requested time period cannot be met, ACS-F will notify GCICC as soon as ACS-F is aware the requested time period cannot be accommodated.

4.4.2 Tagged Terminations

ACS-F will assure that all fieldwork required by ACS-F to complete a GCICC order will result in appropriately tagged termination information at the NID.

MAY 1 3 2004

4.5 Conversions

ACS-F and GCICC shall allow direct communication between wire center technicians and/or NOCs, with a open order or trouble ticket, in order to speed conversion activities and responses on conversion troubles.

4.6 ACS-F shall cancel all associated telephone-based calling cards upon migration of an end-user to GCICC.

4.7 ACS-F shall not disconnect any GCICC subscriber service or existing features at any time without a minimum 24-hour notice to GCICC.

4.8 For Resale Services, ACS-F shall not disconnect any subscriber service or feature at any time during the migration of the subscriber to GCICC.

4.9 Evening Conversions

ACS-F and GCICC will allow for conversions of customers after 5 P.M. when required. For these subscriber conversions ACS-F and GCICC will agree on a scheduled conversion time within a thirty minute window, on a designated date. Generally these conversions will be isolated to business accounts. End user service interruptions shall be held to a minimum; typically, these conversions will not result in customers losing dial tone or having a reduced level of service for more than 5 minutes. The technician will contact GCICC immediately upon completion of each customer conversion.

4.10 Coordinated Conversions

For subscriber conversions requiring coordinated cut-over activities, ACS-F and GCICC will agree on a scheduled conversion time, which will be a designated time period within a designated date. End user service interruptions shall be held to a minimum; typically, these conversions will not result in customers losing dial tone for more than 5 minutes.

4.11 Disconnect or Loss Report

ACS-F will provide a daily disconnection or loss report to GCICC. This report will detail the WTNs which have been converted to another CLEC or to ACS-F in sufficient detail to invoke billing system changes at GCICC.

4.12 Service Suspensions/Restorations

Upon GCICC's request through Suspend/Restore Order, or mutually agreed upon interim procedure, ACS-F shall suspend or restore the functionality of any Network Element, feature, function, or resale service to which suspend/restore is applicable. ACS-F shall provide restoration priority on a per network element basis in a manner that conforms to any applicable regulatory rules, regulations, or government requirements.

2004

4.13 Provisioning Service

4.13.1 Provisioning service is the process whereby the customer receives the services requested in the service order. ACS-F shall perform all provisioning for GCICC customers in ACS-F systems.

4.13.2 The provisioning will be done via automated flow through provisioning from GCICC's LSR, without human interaction, whenever feasible and in the same manner ACS-F provides for its own use.

4.13.3 It is agreed between GCICC and ACS-F that the provisioning of orders will be accomplished in the most expeditious manner available with the minimum amount of disruption to the customer's service. Notwithstanding the foregoing, ACS-F will process orders in accordance with the terms of Part C, Attachment X.

Section 5 Exchange of Information

A single point of contact for technical issues relating to Electronic Interfaces will be designated by ACS-F and by GCICC within 30 days of RCA approval of this agreement. In the event of technical problems with the transmission of data or operation of electronic interfaces, ACS-F and GCICC agree to take reasonable measures to restore normal operations in the shortest possible time frame. All electronic exchange of data will use a secure transmission method and format provided by ACS-F. ACS-F and GCICC agree to use the available electronic interfaces for the exchange of data whenever available.

Section 6 System Availability

ACS-F will provide GCICC with the schedule of standard operating hours for each electronic interface. GCICC will be notified 10 business days in advance of any planned outages or changes to standard operating hours that will impact electronic interface availability. ACS-F will notify GCICC of any OSS or OSS related outage (during the standard operating hours of OSS) within 15 minutes of outage occurrence.
In the event of an extended outage, ACS-F agrees that the Minimum Performance Section in this agreement for pre-ordering, ordering, and provisioning customer service is the required response during the outage period.

Section 7 Local Carrier Service Center (LCSC)/Single Point of Contact (SPOC)

ACS-F and GCICC shall provide a Local Carrier Service Center or equivalent which shall serve as a Single Point of Contact (SPOC) for procedures concerning all activities involved in the ordering, provisioning, and maintenance of ACS-F's unbundled Network Elements, features, functions, and resale services. ACS-F will provide a method to coordinate scheduling, status, and dispatch capabilities during normal business hours. This SPOC must be staffed adequately to respond in the same time frame GCICC or

ACS-F respond to retail or special contract customers for telephone answer times, order entry, confirmations, completions, due dates, repairs, etc.

Section 8 Modification, Enhancement or Development of New Methods, Manual or Electronic

The parties recognize that changes to methods, processes, and procedures will occur as improvements to systems become available. Whenever ACS-F determines that the methods described herein need to be upgraded, it will provide GCICC notice sufficient for GCICC to make necessary changes to take advantage of any improvements. ACS-F will also discuss with GCICC implementation timeframes and accommodate GCICC's reasonable needs consistent with ACS-F's obligations to other customers. If GCICC believes that a particular change will have a material and adverse impact on its ability to exercise its rights under this agreement, GCICC may invoke the Dispute Resolution process described in Section 22 of Part A of this agreement. ACS-F will not proceed with the change until the ADR is complete.

Section 9 Telephone Number Management/Reservations

9.1 ACS-F will provide a real time electronic interface as defined in Appendix A (Available Interfaces) for GCICC to view available telephone numbers and to perform simple reservation requests within ACS-F's number management system. If ACS-F does not receive a valid order for service within 30 calendar days from GCICC following the reservation of a phone number via the electronic interface, the reservation will be automatically released. For complex requests or in the event the electronic interface is not operational due an extended outage, ACS-F will provide GCICC with inventories of phone numbers in each number management area covered by this agreement. The phone numbers on the inventory will be reserved exclusively for GCICC and will not be available for assignment by ACS-F or any other company other than GCICC. In any event GCICC's access to telephone numbers shall be on an equal basis to that which ACS-F provides itself.

9.2 During the time that a phone number is secured with a reservation by GCICC, ACS-F shall not assign that number to any of ACS-F's customers or allow the number to be assigned to a customer of any company other than GCICC.

9.3 ACS-F and GCICC agree that number reservation will only be utilized for the purpose of a valid service order. At no time will either company utilize the number reservation interface for the purpose of hoarding numbers.

Section 10 Intercept Treatment and Transfer Service Announcements

ACS-F shall provide unbranded intercept treatment and transfer of service announcements to GCICC's wholesale subscribers. ACS-F shall provide such treatment

and transfer of service announcement in accordance with local tariffs and as provided to similarly situated ACS-F subscribers for all service disconnects, suspensions, or transfers.

Section 11 Changes in services

ACS-F will provide a at least 60 days notice for changes/discontinuation of services so that GCICC has an opportunity to make the necessary modifications to its ordering, billing, and customer service systems, and so that it can provide sufficient customer notification regarding any changes. If available, ACS-F will provide substitute services and/or elements.

Section 12 Access to customer data

12.1 Access shall be provided to the customer data for any GCICC or ACS-F subscriber without requiring production of a signed Letter of Agency (LOA), based the blanket representation that the subscriber has authorized the requesting party to obtain such data. ACS-F and GCICC have the right, at any time, to audit a claim that a valid LOA exists. Upon 5 business days' notice, ACS-F or GCICC shall produce, either in person or electronically, a copy of the valid LOA. If a dispute arises, and the dispute resolution process described in Section 22 of Part A is invoked, neither GCICC nor ACS-F will block, disconnect or deny access to customer data, electronic order processing, provisioning of services or any other processes or procedures defined in this agreement during the Dispute Resolution process.

12.2 Service Requirements
Unless otherwise directed by GCICC and when technically capable, when GCICC orders resale services or Network Elements all trunk or telephone numbers currently associated with existing services shall be retained without loss of feature capability and without loss of associated ancillary services including, but not limited to, Directory Assistance and 911/E911 capability.

12.3 View Customer Record
ACS-F will provide a real time electronic interface for GCICC to obtain customer data. For information requests that cannot be provided through the electronic interface, ACS-F agrees to provide the data within 1 business day using an alternate data gathering process. ACS-F will provide data via the alternate process for a maximum of 5 accounts or 50 lines per day. If requests requiring alternate processes exceed 5 accounts or 50 lines per day ACS-F and GCICC shall negotiate the return dates.

12.4 Service Address Validation and Facilities Availability
ACS-F will provide a real-time electronic interface for validating service addresses and providing information about available facilities. Where the service address is determined to be invalid, ACS-F will provide GCICC with existing alternatives for the address sent to ACS-F. Where GCICC is unable to validate an address it believes to be correct, ACS-

F agrees to work with GCICC to resolve any respective systems discrepancies and determine the correct address.

12.5 Estimated Due Date

ACS-F will provide a real-time electronic interface for GCICC to use to calculate the expected due date for providing a given service at a specified location. The interface will allow GCICC to view the availability of work units for GCICC use in scheduling installation appointments.

12.6 Service Address Guide (SAG) Extract

ACS-F will provide to GCICC an extract of valid service addresses within the geographic area covered under this agreement within 90 days of GCICC's request, but not more often than quarterly. The extract will be provided electronically in a mutually agreed upon format, and will include the serving wire center (and if applicable, zones within wire centers) for each address and an indicator as to whether the address can be provisioned using unbundled facilities or wholesale. GCICC agrees that this information will be used solely for the accurate provisioning of service orders and will not include customer proprietary information such as customer name or telephone numbers.

Section 13 Ordering

13.1 Order Entry

13.1.1 ACS-F will provide a real time electronic interface for GCICC to place revise or cancel service orders. The electronic interface will provide GCICC with the capability to submit orders for all order types supported by industry standards, but at a minimum, for both loop and resale activities:

- New Installations for existing subscribers
- New installations for new subscribers
- Changes to existing services
- Additions to existing services or service addresses
- Feature adds, changes, or deletes
- Partial disconnects
- Disconnects
- Moves (F&T)

- Record changes
- Conversion orders as is, with changes or Port only
- Suspend and restoral of service
- Rearrangements of existing accounts
- Inside moves of physical termination within a building

13.1.2 Orders submitted through the interface will be entered and flow through ACS-F operational support systems in a method and within timeframes consistent with orders entered directly by ACS-F personnel.

13.1.3 Order Status Data
ACS-F shall provide to GCICC a real time electronic interface to view order status, or be noticed of status change on orders.

13.1.4 Firm Order Confirmation (FOC)
ACS-F will provide a FOC notification to GCICC via a real time electronic interface. The FOC will be issued to GCICC within one hour or less of an electronic order submittal.

13.1.5 Order Rejections

13.1.5.1 When an order is rejected ACS-F shall return the rejected LSR to GCICC, including with the return one or more reject reasons within one hour or less of an electronic order submittal.

13.1.5.2 GCICC shall review and either correct and resubmit, or contact ACS-F for assistance to resolve.

13.1.6 Order completion
ACS-F will provide an Order Completion date to GCICC via a real time electronic interface. The Order Completion will be issued to GCICC within one hour or less of order close data entry into the system by ACS-F, for all orders submitted electronically

13.1.7 LSR Revisions
GCICC will revise orders by issuing supplements to open LSRs. LSR Supplements must be submitted by GCICC prior to noon of the day preceding the due date.

13.1.8 Disconnects

GCICC will send all disconnects via warm transfer. Disconnects must complete within 8 hours, 7:30am - 5:00pm, business days, of order receipt at ACS-F, or upon the GCICC's requested due date, whichever is later.

Section 14 Service Standards

ACS-F shall provide nondiscriminatory, non-preferential services to GCICC that have substantially the same characteristics of timeliness and performance as ACS-F provides to itself, its affiliates (hereinafter referred to as "ACS-F's actual performance"). ACS-F's service performance shall be no worse than or no less than the specific performance threshold of ACS-F's actual performance for the equivalent service, and services will meet the same technical criteria ACS-F uses in its own network. Services will be provisioned, tested, repaired, and maintained at and to the same or like standards and intervals that ACS-F uses within its own network and for its own end user customers in like circumstances. Notwithstanding the foregoing, ACS-F will process orders in accordance with the terms of Part C, Attachment X.

Section 15 Reports

15.1 Reporting by ACS-F with respect to processing and provisioning intervals shall be provided in accordance with the terms of Part C, Attachment X.

15.2 ACS-F will provide reports, no less frequently than monthly, that detail system average repair timeframes, testing statistics, and other factors necessary for GCICC to determine the level of service ACS-F provides to all of its customers, including GCICC. If, after comparing this data to its own record of services provided to GCICC, GCICC determines that it is materially disadvantaged due to materially degraded service quality, GCICC shall notify ACS-F of this discrepancy. If the parties are unable to resolve the apparent conflict within thirty (30) days, the Parties shall engage in the Dispute Resolution process set forth in Section 22 of Part A, and within that process, GCICC may request an Audit or Examination of ACS-F's operations.

15.3 Telephone Response – At a minimum, ACS-F shall provide reports of the percentage of calls answered within 30 seconds or less, and any other relative measurements the reports reflect of the ACD ACS-F uses to process GCICC orders and the ACD ACS-F uses to process retail orders. These reports will be provided monthly. If GCI believes it needs further information than provided by ACS on this ACD report, GCI may engage the Dispute Resolution process set forth in Section 22 of Part A,

15.4 Repair – Upon request by GCICC, in conjunction with 16.3 above, ACS-F shall provide the following statistics by trouble ticket type (out of service and non-out of service): repair intervals (the time a ticket was opened and closed, total number of hours out of service). This report shall reflect, at a minimum, the total GCICC tickets and total ACS-F tickets for a calendar month, separated business and residential, and must include a monthly summary of average repair times per type of troubles for GCICC and ACS-F.

15.5 System Interface, Network Reliability – ACS-F shall provide "outage" statistics monthly to GCICC for all systems, interfaces or networks affecting GCICC access to OSS.

Section 16 Improvement Plan Implementation

16.1 ACS-F will provide improvement plans for each area in which standards are not met due to circumstances under their control. These plans, including implementation timelines, will be provided to GCICC. The plans may include such things as increased staffing, change to procedures in order to meet standards, etc.

16.2 Documentation – Documentation, as appropriate to the identified problem, will include reports and Performance Improvement Plans, which result in compliance with agreed upon performance standards and may include:

a. evaluation of the opportunity for continuous improvement, systems enhancements and re-engineering;

b. forecasted improvement to the desired Performance Standard for each issue or initiative;

c. current and improved upon processes;

d. control processes which ACS-F management will use for the transitional period;

e. evaluation of pertinent changes in periodic (monthly, weekly) results;

f. opportunities for source and root cause analyses; and

g. a date for compliance with Performance Improvement Plans implementation.

16.3 Performance Improvement plans will be reviewed monthly or, more frequently as updated data and analyses are available.

Section 17 Format

17.1 Sections below include the information to be provided by electronic interfaces and (where applicable) additional data to be provided that is not included in the electronic format. It is noted that these may need to be modified over time to accommodate alterations to software or business practices. When such alterations are required, ACS-F and GCICC agree to use the process outlined in the *Modification, Enhancement or Development of New Methods, Manual or Electronic* section in this Agreement.

17.2 The following Electronic Interfaces are immediately available to GCICC:

17.2.1 Reserve Telephone Number

17.2.2 View Customer Record (some manual data gathering still required)

17.2.3 Service Address Validation and View Available Facilities

17.2.4 Calculate Estimated Due Date

17.2.5 View Installation Calendar

17.2.6 Firm Order Confirmation

17.2.7 Order Completion

17.2.8 Trouble Ticket Submission/Modification

17.3 The following Interface will be available to GCICC by June 30, 2001:

17.3.1 Electronic Order Submittal and flow through provisioning

17.3.2 Amend Remedy Ticket

17.3.3 Notices via Remedy

17.4 This interface will be developed based upon OBF standards (as agreed to and modified by both parties).

17.5 Facilities Reservations is a potential future Interface without a defined date

17.6 Work force management is a potential future Interface without a defined date

17.7 Telephone Number Management/Reservations – Following is the information to be provided for electronic Telephone Number Management/Reservation.

- Company Code
- Completion Code
- Customer Carrier Name Abbreviation
- Date And Time Sent
- Error Description
- Inquiry Activity
- Inquiry Number
- Inquiry Response Number
- Inquiry Type *** - deleted
- PIC List (CICs)
- Quantity Of Numbers Requested
- Requested (Telephone) Number
- Service Address Building ID
- Service Address Descriptive Location

- Service Address Floor Identifier
- Service Address House Number
- Service Address House Number Suffix
- Service Address House Prefix
- Service Address Locality
- Service Address Room ID
- Service Address Street Directional
- Service Address Street Name
- Service Address Street Suffix
- Service Address State/Province
- Service Address Thoroughfare
- Service Address Zip Code
- Telephone Number Response
- Type of Service

17.8 View Customer Record

A valid request from GCICC will consist of a customer account number, working telephone number or circuit ID, along with an indicator that GCICC has met the requirements outlined in the previous section for the release of customer data. ACS-F will return, at a minimum, the following information to the extent it is available in any systems at ACS-F:

a. Customer Billing Information (names and addresses, customer type, service class)

b. Working telephone numbers and service names/addresses

c. Serving Office and Wire Center

d. Directory and 411 listing information, including current yellow page classification headings on record.

e. LIDB information

f. Services and Features provisioned

g. Current LD PIC information

h. All configurations in place for LOD (Line Overflow to Directory Number), CFW (Call Forward), and RCF (Remote Call Forward)

i. All Directory Number Hunt information, including assigned numbers and the sequence in the hunt string

j. Indicate whether the telephone number or circuits listed have a Pending Order against them

k. Following is the information to be provided for electronic customer

- Account Number
- Account Telephone Number
- Address Indicator
- Agency Authorization Status
- Alpha/Numeric Listing Identifier Code
- Authorization Name
- Blocking Exceptions
- Building
- Business/Residence Placement Override
- Channel Code– ACS-F cannot provide electronically
- City
- Class of Service
- Company Code
- Completion Code
- Concatenated Address Information
- Customer Carrier Name Abbreviation
- Date And Time Sent
- Date Of Agency Authorization
- Delivery Address
- Delivery Address Descriptive Location
- Delivery Address House Number
- Delivery Address House Number Suffix
- Delivery Address House Prefix
- Delivery Address Locality
- Delivery Address Location
- Delivery Address State/Province
- Delivery Address Street Directional
- Delivery Address Street Name
- Delivery Address Street Suffix
- Delivery Address Thoroughfare
- Delivery Address Type
- Delivery Address Zip Code
- Designation
- DID Digits Out– ACS-F cannot provide electronically
- DID Route Index Number– ACS-F cannot provide electronically
- DID Telephone Line Identifier– ACS-F cannot provide electronically
- DID Trunk Group Number– ACS-F cannot provide electronically
- DID Trunk Identifier– ACS-F cannot provide electronically
- DID Trunk Quantity– ACS-F cannot provide electronically
- Direct Mail List
- Directory ID for Directory Delivery
- Directory ID Type
- Directory Identifier
- Directory Name
- Directory Subsection
- Do not Abbreviated Listed object
- Dual Name Listing
- End User Name
- End User Name
- Error Code
- Error Description
- Exchange Company Circuit ID
- Feature Codes
- Feature Detail
- Floor
- Freeze PIC Indicator
- Hunt Group Identification– ACS-F cannot provide electronically
- Hunting Sequence– ACS-F cannot provide electronically
- Hunting Type Code
- Indent Text
- Inquiry Number
- InterLATA Presubscription Indicator Code
- International Presubscription Indicator Code
- IntraLATA Presubscription Indicator Code
- Line of Text Reference Number
- Listed Address
- Listed Address House Number
- Listed Address House Number Suffix
- Listed Address House Prefix
- Listed Address Locality
- Listed Address Location
- Listed Address State/Province
- Listed Address Street Directional

- Listed Address Street Name
- Listed Address Street Suffix
- Listed Address Thoroughfare
- Listed Address Zip Code
- Listed Name
- Listed Name First
- Listed Name Last
- Listed Telephone Number
- Listed Text Type
- Listing Name Placement
- Listing Nickname
- Listing Text
- Listing Type
- Local Service Termination
- Network Channel Code– ACS-F cannot provide electronically
- Network Channel Interface Code
- No Solicitation Indicator
- Non Standard Telephone Number
- Number of Delivery Segments
- Number of Directories for Annual Delivery
- Omit From Secondary Directory
- Omit Telephone Number (TN)
- Place Listing As
- Professional Identifier
- Pulsing Type
- Record Type
- Room
- Secondary Network Channel Interface Code
- Service Address
- Service Address Descriptive Location
- Service Address House Number
- Service Address House Number Suffix
- Service Address House Prefix
- Service Address Locality
- Service Address Location
- Service Address State/Province
- Service Address Street Directional
- Service Address Street Name
- Service Address Street Suffix
- Service Address Thoroughfare
- Service Address Zip Code
- Service Center 1
- Service Center 2
- Signaling – ACS-F cannot provide electronically
- Special Exemptions
- Standard Industrial Classification
- Start Signaling
- State/Province
- Street Address Directory
- Style Code
- Telemarketing
- Terminal Numbers
- Title of Address 1
- Title of Address 2
- Title of Lineage
- Transaction Type
- TTY or TDD Indicator
- TTY or TDD Indicator
- Type of Account
- Type of Service
- White Page Products
- Working Telephone Number
- Yellow Page Heading Code
- Yellow Page Heading Verbiage
- Zip Code

17.9 In addition to the information indicated above, ACS-F shall make the following information available to GCICC either electronically or through a manual method:

17.9.1 All configuration information or engineering data required to accurately provision the line. such as:

a. Channel Code, Network Channel Code, and Signaling as defined in the OBF standard ATIS/OBF-LSR-122.

b. Hotel/Motel Class Mark feature information.

c. Whether there are currently open trouble tickets for each service.

d. Whether a line or circuit is designated for Priority restoration in an emergency.

e. Details on Off Premise Extensions (OPX), including provisioning (2 wire, 4 wire, etc.) and service locations.

f. The Circuit Layout Record for circuits.

g. PVL details such as signaling issues (ground or loop, 2/4 wire, etc.).

h. All translations such as pointing, routing, channelization, or non channelization and conditioning on the lines, including signaling types such as B8ZS.

i. All POTS and DID Guiding Point numbers, with indications as to their relationships to DSS and PRI Service.

j. On Multi-Drop Private Line service include all legs of that circuit, addresses for each leg, and the associated USOC codes and quantities specified.

k. On DSS and PRI service the line code and framing information, as well as the following information defined in the OBF standard ATIS/OBF-LSR-122.

1. DID Digits Out
2. DID Route Index Number
3. DID Trunk Group Number
4. DID Trunk Quantity
5. DID Trunk Identifier
6. DID Telephone Line Identifier

l. Hunt Group Identification and Sequence, as defined in the OBF standard ATIS/OBF-LSR-122.

m. Trunk signaling and digits for Analog DID trunks and signaling and digits for DID provisioned over DSS and PRI.

n. Comments associated with the lines and circuits where such remarks include necessary information for provisioning the line.

o. All Directory Number Hunt information, including circuit numbers and the sequence in the hunt string.

p. All configurations in place for LOD (Line Overflow to Directory Number), CFW (Call Forward), and RCF (Remote Call Forward), here such data is not available through the electronic interface.

q. Customer credit history, including late payment detail and interruptions of service for non-payment.

r. The name of the interconnection company of record.

17.10 Service Address Validation and View Available Facilities
The following information shall be included when service address validation and facilities availability are to be provided electronically.

- Additional Lines at address
- Address Response
- Alternate Addresses Number
- Cable pair availability
- Company Code
- Completion Code
- Current service type at this address
- Customer Carrier Name Abbreviation
- DAML currently in
- Date And Time Sent
- Error Description
- Inquiry Activity
- Inquiry Number
- Is it cut through or field
- Line Equipment
- LLOA on file
- Pending orders
- Service Address Building ID
- Service Address Floor Identifier
- Service Address Descriptive Location
- Service Address House Number
- Service Address House Number Suffix
- Service Address House Prefix
- Service Address Locality
- Service Address Room ID
- Service Address State/Province
- Service Address Street Directional
- Service Address Street Name
- Service Address Street Suffix
- Service Address Thoroughfare
- Service Address Zip Code
- Type of interface device at prem
- Wholesale or loop
- Wirecenter/zone
- Working Telephone Number
- # of lines customer wishes to provide

17.10.1 In addition to the information indicated in the above electronic format, ACS-F shall make the following information available to GCICC either electronically or through a manual method:

a. If there is sufficient cable/pair availability to provide the service

b. The Loop binder post & pair assignments

c. Whether there are loop compression Devices other than DAML installed at the premise

d. The Wire Center, Serving Central Office, and zone (where applicable) for this address

e. If there are currently HDSL/Centrex/ISDN/XDSL services at the address

f. Whether there is available switch line equipment in the customer's serving area

17.11 Calculate Estimated Due Date
The following information shall be provided when the estimated due date is to be provided electronically.

- Company Code
- Completion Code
- Customer Carrier Name Abbreviation
- Date and Time Sent
- Earliest Start Date
- Error Description
- Number of units needed
- Next available Date
- Work Type
- Work Center

17.12 The following format shall be used when the view of the installation calendar is to be provided electronically.

- Available Units
- Completion Code
- Company Code
- Customer Carrier Name Abbreviation
- Date and Time Sent
- Error Description
- Inquiry Date
- Inquiry Response Number
- Service Order Number
- Work Center
- Work Type
- Work Units Assigned

. 2004

17.13 Firm Order Confirmation

The following information shall be provided when the Firm Order Confirmation data is to be provided electronically.

- Account Number
- Account Telephone Number
- Amount of Time on Job
- Completion Code
- Completion Date
- Customer Carrier Name Abbreviation
- Error Description
- Existing Account Number
- Existing Account Telephone Number
- Effective Billing Date
- Field Visit Indicated
- Installation Material
- Material Cost
- Provider Contact Representative
- Purchase Order Number
- Response Date and Time Sent
- Remarks
- Response Type
- Service Order Number
- Service Order Indicator
- Telephone Number
- Time Indicator
- Version Identification

17.14 Order Completion

The following information shall be provided when the Order Completion data is to be provided electronically.

- Completion Code
- Error Description
- Account Number
- Account Telephone Number
- Customer Carrier Name Abbreviation
- Completion Date
- Existing Account Number
- Existing Account Telephone Number
- Effective Billing Date
- Material Cost
- Installation Material
- Purchase Order Number
- Response Date and Time Sent
- Remarks
- Provider Contact Representative
- Response Type
- Telephone Number
- Amount of Time on Job
- Time Indicator
- Version Identification
- Service Order Number
- Service Order Indicator

17.15 Trouble Ticket Submission/Modification

The following format shall be used when the Trouble Ticket submission/modification data is to be provided electronically.

- Access hours
- City (note some abbreviations)
- Company Name
- Completion Code
- Contact Name and Phone#
- Error Description

- GCICC Activity Log
- GCICC AR#
- Ground Start
- MLH Sequence
- Multiple Line Equip? Y or N
- Phone Number or Circuit ID
- Request Summary Code and Desc
- Tie Cable Pair
- Timestamp ticket entered in Trouble system
- Values: "GCI"
- Values: "Phone" or "Circuit"
- Values: "Y" or "N"
- Wire Center

17.16 Trouble Ticket Inquiry/Response
The following information shall be provided when the Trouble Ticket Inquiry/Response data is to be provided electronically.

- Completion Code
- Date ticket entered current state
- Error Description
- GCICC Activity Log
- GCICC AR#
- MLH Sequence
- Number of tickets in Queue
- Phone Number or Circit ID
- Position in Queue
- Request Summary Code and Desc
- Timestamp ticket entered in TMS

Section 18 Directory

ACS-F shall provide GCICC directory services at parity with the publisher's treatment of ACS-F

18.1 Publication

18.1.1 Business Rules
For as long as GCICC and ACS-F choose to list customer information in a ACS-F directory or directories, ACS-F will provide copies of the appropriate front office Business Rules for listing formats for each directory. Examples of Business Rules include:

a. Listing format rules

b. Listing alphabetizing rules

c. Standard abbreviations acceptable for use in listings and addresses

d. Titles and designations

e. A list of all available directories and their Business Office close dates

f. ACS-F will update these instructions to GCICC as the updates occur.

18.1.2 Listing Data Format
ACS-F will provide instructions to GCICC regarding data format for submission of listings to ACS-F. GCICC will submit listings electronically to ACS-F, grouped by listing name, using such format. ACS-F will facilitate the insertion of the GCICC listings with the ACS-F directory contractor selected by ACS-F and ensure that the quality and accuracy of listings is consistent with GCICC's instructions.

18.1.3 Quarterly Galleys
ACS-F will provide GCICC's listings to the directory publisher at least once per quarter. ACS-F will arrange with the directory contractor to provide to GCICC a review galley and exception reports at GCICC's request but no more often than quarterly. ACS-F will arrange with the directory contractor to provide a combined galley for directory close processes on the same day the publisher provides the combined galley to ACS-F.

18.1.4 Basic White Page Listings
GCICC residential and business subscribers shall receive one free listing in the alphabetical directory for each primary number. The primary number of each business service will be listed in the classified section at no charge.

18.1.5 Tariffed White Page Listings
In addition to a basic White Pages listing, ACS-F will provide, at the rates set forth in Attachment II of this Agreement, tariffed White Pages listings (e.g., additional, alternate, foreign and non-published listings) for GCICC to offer for resale to GCICC's customers.

18.1.6 Business Classified Listings
The primary number(s) of each business service will be listed in the classified section at no charge.

18.1.7 Information Pages
ACS-F agrees to include critical contact information pertaining to GCICC in the "Information Pages" of those of its White Pages directories covering markets in which GCICC is providing or plans to commence providing local exchange service during the publication cycle of such directories. Critical contact information includes GCICC's business office number, repair number, billing information number, and any other information required to comply with applicable regulations. Advertising or purely promotional material shall not be included in the information pages, unless ACS-F allows advertising or purely promotional material for itself or for other companies to appear in the information pages of the directory. The format, content and appearance of the GCICC

information pages will conform to applicable ACS-F and/or directory publisher guidelines and will be consistent with the format, content, and appearance of information pertaining to all like pages in the directory. The pages shall be of reasonable number, not to exceed 16, unless ACS-F information pages are allowed to exceed a fixed number of 16. GCICC will not be charged for inclusion of its critical contact information, unless charged at the same rate ACS-F is charged by the publisher for information pages associated with ACS-F critical contact information.

18.1.7.1 Information pages, in addition to any information page or portion of an information page containing critical contact information as described above may be purchased from ACS-F's directory publisher, subject to applicable directory publisher guidelines and regulatory requirements.

18.1.8 Listing Confidentiality

ACS-F will accord GCICC customer listing information the same level of confidentiality that ACS-F accords it own proprietary customer listing information. ACS-F shall ensure that access to GCICC customer proprietary listing information will be limited solely to those of ACS-F and ACS-F's directory publisher's employees, agents and contractors that are directly involved in the preparation of listings, the production and distribution of directories, and the sale of directory advertising. ACS-F will advise its own employees, agents and contractors and its directory publisher of the existence of this confidentiality obligation and will take appropriate measures to ensure their compliance with this obligation. Notwithstanding any provision herein to the contrary, the furnishing of White Pages proofs to a GCICC that contains customer listings of both ACS-F and GCICC will not be deemed a violation of this confidentiality provision.

18.1.9 Selling or Licensing Listings

ACS-F will not sell or license GCICC's customer listing information to any third parties without GCICC's prior written consent, with the exception of other telephone companies in the state of Alaska for the express purpose of publication. All other requests for GCICC customer information will be referred directly to GCICC. The parties agree that the release of GCICC's customer listing to ACS-F's publisher will not constitute the sale or license of GCICC's customer listing information and therefore will not cause any payment obligation to arise pursuant to this Subsection.

18.1.10 Directory Distribution

18.1.10.1 ACS-F agrees to provide Directory distribution services to GCICC customers within ACS-F's service territory at no additional charge to GCICC. ACS-F represents that the quality, timeliness, and manner of

such distribution services will be at parity with those provided to ACS-F and to other customers.

18.1.10.2 GCICC Residential customers will receive one free directory for each access line in service; GCICC Business customers will receive a minimum of two free directories for each access line.

18.1.10.3 GCICC can place orders for up to 250 additional printed directories (by serving area) and on an as needed basis. If at any point the number of directories beyond the initial distribution to households and businesses and the allocation of 250 (by serving area), requested by GCICC requires additional printing and production costs over the number of directories allocated to ACS-F by the publisher, GCICC shall bear the costs of additional printing and publication.

Section 19 Maintenance, Testing, and Repair

ACS-F shall provide repair, maintenance and testing for all Telecommunications Services and unbundled Network Elements in accordance with the terms and conditions of this Agreement.

19.1 Maintenance

19.1.1 Any change, maintenance, testing or repair
It is agreed between GCICC and ACS-F that any change, maintenance, testing or repair on any Telecommunications Services or unbundled Network Elements serving GCICC or GCICC customers, or allowing to be served GCICC or GCICC customers, will be performed with a minimum of disruption of service and at parity with that which ACS-F provides for itself or its other customers.

19.1.2 Maintenance Standards
ACS-F shall meet maintenance standards for all Telecommunication Services and unbundled network elements provided for or ordered under this agreement.

19.1.3 Emergency Restoration, Maintenance or Repair
ACS-F shall provide GCICC emergency restoration, maintenance, and repair on the same schedule to that which ACS-F provides to itself or its other customers.

19.1.4 Spectrum Management of DSL-qualified Loops and Shared Lines
ACS-F will manage spectrum interference and compatibility for DSL-qualified loops and Shared Lines. At such time as industry standards are developed and adopted, ACS-F will utilize the industry standards as the criteria for spectrum management. The criteria used to deny a loop to GCICC due to spectrum management issues will be non-discriminatory and will be shared with GCICC for any loops denied as a result of spectrum management concurs.

19.1.5 Dispatch Personnel
ACS-F shall provide GCICC maintenance dispatch personnel on the same schedule to that which it provides its own subscribers.

19.1.6 SPOC
ACS-F shall provide a SPOC (Single Point of Contact) for GCICC to report maintenance issues and trouble reports to twenty four (24) hours a day and seven (7) days a week.

19.1.7 Notice of Activity
ACS-F and GCICC shall give reasonable advance and completion notice to each other of all scheduled and non-scheduled maintenance, network outages, cable cuts, or other planned network activities, to be performed on any network element, including, without limitation, any hardware, equipment, software, or system, providing service which may potentially impact ACS-F or GCICC subscribers. The notice will be sufficient to allow each carrier to anticipate customer inquiries.

19.1.8 Loss of Service during Maintenance
GCICC customers who lose service as a result of any unintentional activity by ACS-F during maintenance activities will have service restored within the same timeframe as ACS-F restores its own customers. No billing will be incurred by GCICC for these service restorations even if such restorations occur outside of ACS-F's normal repair hours.

19.1.9 Notice to GCICC
ACS-F will provide GCICC an electronic method for GCICC to determine if a GCICC customer trouble report is associated with ACS-F maintenance activity.

19.1.9.1 Upon completion of the work, ACS-F shall inform the GCICC SPOC real time of the actual completion date and time immediately upon such completion.

19.1.10 Testing

19.1.10.1 ACS-F shall provide GCICC with access to the Harris Line Test System that will allow GCICC to test all local service elements connected to a GCICC wholesale customer (resold services) in a manner equal to that with which ACS-F provides to itself.

19.1.10.2 Within 8 business hours of GCICC's request for scheduled cooperative maintenance testing, ACS-F shall schedule such testing with GCICC (including trouble shooting to isolate any problems) to test

Network Elements purchased by GCICC in order to identify any problems.

19.1.11 Test Results
GCICC and ACS-F may share test results upon request as an aid to diagnosing troubles.

19.1.12 Testing Resold Services
ACS-F shall perform all Telecommunication Services testing for GCICC wholesale customers in a manner consistent with that which ACS-F provides to its own customers. GCICC may request line testing without the necessity of opening a trouble ticket with ACS-F when the real time electronic interface is not available or operational that would allow GCICC to test the line for itself. ACS-F will provide the test results to GCICC immediately.

19.1.13 Shared Line Testing
ACS-F will provide GCICC test access to all shared lines including access to the 2W Analog line (nominal 0 – 4 kHz spectrum).

19.2 Repair

19.2.1 ACS-F will provide GCICC with a real time Electronic Interface that will allow GCICC to open, check the current status, modify, cancel or close trouble tickets for GCICC customers in a manner equivalent to that with which ACS-F provides to itself. As ACS-F modifies, updates, or closes a ticket, GCICC will receive an immediate electronic notice of change.

19.2.2 Upon establishment of the Electronic Interface, ACS-F shall notify GCICC via such electronic interface immediately upon completion of trouble report. The report shall not be considered closed until such notification is made.

19.2.3 GCICC shall also submit trouble tickets to ACS-F via, fax or email when an electronic interface is not provided or available.

19.2.4 Prioritization
GCICC may prioritize the scheduling of repair dispatches for GCICC customers within the normal course of ACS-F's repair schedule.

19.2.5 Misdirected Repair Calls
On any misdirected repair calls to either party, the customer requesting repair service will be provided with the correct repair number and an offer to transfer the customer to the correct number will be given.

19.3 Trouble Reporting and Dispatch Priorities

The priority of the trouble ticket is set by the contents of the Trouble Type and Service Use fields. The priority can be changed during the life of the ticket with the changes in the circumstances of the trouble ticket. The Priorities range from 86, and 1-10, with 86 considered a "Hot" trouble ticket that needs immediate attention. The priorities 1-10 are rated with 1 being the most urgent and 10 the least urgent. All Payphone troubles are given a Priority 1 rating.

19.3.1 The Priority explanations are found below:

Priority 1: Out of Service conditions for critical business services, health and safety.

a. ACS-F Error – The customer has reported that ACS-F has been working in their area and has caused a service outage. The Call Taker should verify that indeed ACS-F could have caused the outage.

b. Centrex – Centrex outage, usually involves a business service.

c. Critical Business – The service is critical to the operation of a business.

d. IDSL – The service usually critical to the operation of a business.

e. Intermittent – The intermittent nature of the problem may cause a service to be unusable. The intermittent problem may need to be responded to quickly to catch the problem as it is occurring.

f. ISDN – The service is usually critical to the operation of a business.

g. Medical – The interruption of service could cause a delay in receiving medical treatment.

h. Repeat – This is any problem that has been reported and the trouble ticket closed in the last 60 days.

i. Safety – A safety issue with the service interruption, causing risk to life, health, property.

j. System Down – A Key or PBX system is down and needs attention.

Priority 2: Out of service or service affecting conditions for lines that, while urgent, are not considered a top priority.

a. Critical Business – The critical business service is affected but not out of service.

b. Critical Residential – The only line for a residential customer.

c. Repeat – A service affecting repeat trouble, not out of service.

d. The following are Programming Options that are reported as out of service or working improperly. These options are considered Priority 2.

i. Call Forward

ii. Call Waiting

iii. Continuos Redial

iv. Intercom

v. Last Call Return

vi. Last Number Redial

vii. Line Block

viii. Message Waiting Visual

ix. Remote Call Forward

x. Restrict Sent Paid

xi. Speed Calling

xii. Toll Restriction

xiii. Voice Mail

xiv. 900 Number Toll Restriction

Priority 3: Installs for critical business services.

Priority 4: Installs for critical residential services.

Priority 5: Extensions or troubles on a service that do not warrant a higher priority.

a. Customer Caused – Troubles caused by the customer, such as, pulling the jack off a wall.

b. Key Extension – A Key extension that is working improperly or out of service.

c. Medical – A service used for medical purposes but is the service slightly affected.

d. Non-Critical Business – A non-critical business service that is working improperly or out of service.

e. PBX Extension – A PBX extension that is working improperly or out of service.

f. Straight Line Extension – A straight line extension that is working improperly or out of service.

Priority 6: Installs for non-critical business.

Priority 7: Non-critical residential services or customer caused problems that are out of service or cause service affecting conditions.

a. Customer Caused – The customer has created a condition on a non-critical service.

b. Non-Critical Residential: The residential service is considered non-critical. i.e. teen line, modem line.

c. Customer Requested Testing – Customer requested testing of their service.

d. Intermittent – Modem line with intermittent problems.

e. Critical Residential – Critical residential service with minor service affecting problem.

Priority 8: Non-critical residential install.

Priority 9: The lowest priority service affecting trouble reports, i.e. radio others on line, noise and static.

a. Customer Requested Testing – Customer requested testing of their service.

b. Other - Miscellaneous trouble report.

c. Customer Caused – The customer caused a problem that created a low priority trouble report.

d. Non-Critical Business – A minor service affecting problem on a non-critical business service.

e. Non-Critical Residential – A minor service affecting problem on a non-critical residential service.

f. Intermittent – A minor intermittent service affecting problem on the service.

Priority 10: The lowest priority, is used for relocating SIDs and drops, burying drops, tree trimming, and customer inquiry calls.

PART C – ATTACHMENT V

COLLOCATION

Section 1 Introduction

1.1 This Attachment sets forth the requirements for collocation. Collocation is all forms of collocation including physical collocation, adjacent collocation, and virtual collocation. There will be a collocation application fee per collocation site requested by GCICC. The fee is to cover ACS-F for expenses in processing the application.

1.1.1 ACS-F will provide GCICC unrestricted access to any collocation space. This is meant to include 24 hours a day by 7 days a week access. GCICC shall call and notify ACS-F's NOC when GCICC determines access to ACS-F facilities is necessary.

1.1.2 ACS-F will not disconnect AC or DC power or other support service (i.e., HVAC) (unless a major emergency is imminent or in process) without reasonable notification to GCICC.

Section 2 General Descriptions

2.1 Physical collocation enables GCICC to place, within or upon ACS-F's premises or points, equipment necessary, required or indispensable for interconnection to ACS-F's network facilities for the transmission and routing of telephone exchange service, exchange access service, or both, and for access to ACS-F's unbundled network elements. GCICC will not install any equipment used solely for switching or solely for providing enhanced services. ACS-F will provide for physical collocation within or upon ACS-F's premises in space selected by ACS-F, except where it is not feasible for technical reasons or because of space limitations.

2.1.1 In addition to the floor space, ACS-F will provide fire suppression, AC convenience outlets, -48 VDC power and battery backup (if requested and capacity is available), heating, air conditioning and other environmental supports and generator back-up to GCICC's collocation space. ACS-F's obligation is limited to providing such services in substantially the same fashion as it provides such services to itself in the premises in which the collocation space is located. The expense, if any, of extending these services to GCICC's collocation space will be included in the cost proposal for space preparation.

2.1.2 ACS-F will provide two separate building entrance facility points to each ACS-F premise or point where there are at least two building entrance facility points existing and available for ACS-F's facilities to the premise or point.

2.2 Adjacent collocation enables GCICC, where space is legitimately exhausted in particular ACS-F premises, to collocate in adjacent controlled environmental vaults or similar structures to the extent technically feasible. ACS-F shall permit GCICC to construct or otherwise procure such a structure subject only to reasonable safety and maintenance requirements. ACS-F shall provide –48VDC power and battery backup (if requested and capacity is available), and physical collocation services and facilities, subject to the same nondiscrimination requirements as applicable to any other physical collocation arrangement. ACS-F will permit GCICC to place its own equipment, including, but not limited to, copper cables, coaxial cables, fiber cables, in adjacent facilities constructed by either ACS-F or GCICC.

2.2.1 ACS-F will provide two separate facility entrance points to each ACS-F premise or point where there are at least two facility entrance points existing and available for ACS-F's facilities to the premise or point.

2.3 Virtual collocation enables GCICC to designate specific equipment, dedicated to GCICC's use, to be installed, maintained and repaired by ACS-F within or upon ACS-F's premises in space selected by ACS-F, necessary, required or indispensable for interconnection to ACS-F's network facilities for the transmission and routing of telephone exchange service, exchange access service, or both, and for access to ACS-F's unbundled network elements. GCICC will not designate any equipment used solely for switching or solely for providing enhanced services.

2.3.1 In addition to the floor space, ACS-F will provide fire suppression, AC convenience outlets, -48 VDC power and battery backup (if requested and capacity is available), heating, air conditioning and other environmental supports and generator back-up to GCICC's collocation space. ACS-F's obligation is limited to providing such services in substantially the same fashion as it provides such services to itself in the premises in which the collocation space is located. The expense, if any, of extending these services to GCICC's collocation space will be included in the cost proposal for space preparation.

2.3.2 ACS-F will provide two separate facility entrance points to each ACS-F premise or point where there are at least two facility entrance points existing and available for ACS-F's facilities to the premise or point.

2.4 GCICC will restrict the submission of detailed site requirements such that detailed site requirements pending ACS-F approval do not exceed five (5) locations irrespective of areas in the state at any given time.

Section 3 *Collocation Application Process*

3.1 Physical Collocation

3.1.1 Request for Collocation. A request for physical collocation must be submitted to ACS-F in writing. At a minimum, the request must include: a) identification of the premise or point where collocation is requested, b) floor space requirements, c) distribution frame space requirements, d) building entrance facility requirements, e) power and ground requirements. f) type of equipment to be collocated and its intended use and g) date GCICC requests for occupancy of collocated space. A site survey may be included with the request.

3.1.2 Within 5 business days of receipt of GCICC's request for collocation, ACS-F and GCICC will assign single points of contact ("SPOC") for the collocation request. The SPOCs will work cooperatively and ACS-F will provide GCICC with access to engineering and facility records necessary to properly design collocation space, equipment layout, power systems, cable racks, cabling, etc.

3.2 Preliminary Site Survey

If ACS-F determines that a site survey is necessary to determine feasibility and/or approval of GCICC's request, ACS-F shall notify GCICC and afford GCICC the opportunity to be present at the survey. The preliminary site survey must be completed within 15 business days of GCICC's request for collocation.

3.3 Approval/Rejection of Request

Within 5 business days of the preliminary site survey, or no more than 20 business days from receipt of GCICC's request for collocation, ACS-F will approve or reject GCICC's request. If the request is rejected, the reason(s) for rejection must be included. If ACS-F fails to provide the reason(s) for rejection or if GCICC disagrees with the reason(s) for rejection or finds it unreasonable, ACS-F and GCICC will negotiate a mutually acceptable solution. At GCICC's election, ACS-F shall escort GCICC representatives on a tour of the premise or point at issue. If a mutually acceptable solution cannot be reached within 15 business days of ACS-F's notice of rejection, GCICC may request the matter be resolved through Dispute Resolution as set forth in this Agreement.

3.3.1 Collocation by type has been requested and is currently approved under section 3.3 at the following locations:

I. Assumes UNE Switching (where GR303, DSS and PRI interfaces and power is available) purchased from ACS-F.

Physical Collocation Sites	loor Space Req'd (Sq. Ft.)	pprox. Space Dimensions (Ft.)	Frame Space Req'd (Blocks)	ntrance Facilities Req'd (4" Ducts)	23" Rack Space Req'd	8VDC Power Req'd (Amps)
reenwood	162	9 x 18	12	1	1	60
. Wainwright	162	9 x 18	10	1	1	0
elson AFB	162	9 x 18	10	1	1	45
orth Pole	162	9 x 18	10	1	1	0
neau Main	162	9 x 18	12	1	1	0

Note 1: Rack space is actually in the ACS-F equipment area and not part of the floor space requirement. It is most likely that GCICC will not need a full rack, but will need space for DSX panels.

Note 2: Floor space and power requirements are estimates. Actual requirements to be determined when detailed site requirements are submitted and approved under section 3.5.

II. Assumes UNE switching not purchased from ACS-F.

Physical Collocation Sites	loor Space Req'd (Sq. Ft.)	pprox. Space Dimensions (Ft.)	Frame Space Req'd (Blocks)	ntrance Facilities Req'd (4" Ducts)	23" Rack Space Req'd	8VDC Power Req'd (Amps)
reenwood	300-400	18 x 22	42	2	1	200
. Wainwright	350-400	18 x 22	9	2	1	0
elson AFB	400-450	18 x 25	15	3	1	45
orth Pole	162	9 x 18	10	1	1	0
neau Main	340-450	18 x 25	30	4	1	0

Note 1: Rack space is actually in the ACS-F equipment area and not part of the floor space requirement.

Note 2: Floor space and power requirements are estimates. Actual requirements to be determined when detailed site requirements are submitted and approved under section 3.5.

3.4 Pre-Construction Site Survey

Subsequent to ACS-F's approval of the request for collocation, GCICC may request a site survey to gather information necessary to develop detailed site requirements. ACS-F shall schedule the site survey within 5 business days of GCICC's request. The scheduled time shall allow for completion of the survey within 15 business days of the request.

3.5 Detailed Site Requirements

Subsequent to pre-construction surveys, GCICC will submit detailed site requirements to ACS-F for review, cost development and approval.

3.6 Approval of Detailed Site Requirements

ACS-F shall respond to GCICC within 10 business days of receipt of GCICC's detailed site requirements with ACS-F's approval or rejection of the detailed site requirements. If ACS-F rejects the detailed site requirements, the reason(s) for rejection will be provided. If the reason(s) for rejection are reasonable, GCICC will modify the detailed site requirements accordingly and resubmit to ACS-F. If GCICC finds the reason(s) for rejection unreasonable, ACS-F and GCICC will negotiate a mutually acceptable solution. If a mutually acceptable solution cannot be reached within 15 business days of ACS-F's notice of rejection, GCICC may request the matter be resolved through Dispute Resolution as set forth in this Agreement.

3.7 Cost Proposals and Acceptance

3.7.1 ACS-F shall, within 20 business days of approving GCICC's detailed site requirements, provide a cost estimate and implementation schedule for any work to be performed by ACS-F. The cost estimate will include an itemized list of all labor, materials, equipment, permits, and any other costs for which GCICC will be responsible.

3.7.2 Any work to be performed inside the collocation space, where such space is enclosed by a cage or other physical separation, may be performed by GCICC employees or GCICC contractors. Any work associated with the construction or preparation of the collocation space and any work to be performed on ACS-F property outside the caged or physically separate collocation space must be performed by ACS-F.

3.8 Implementation Schedule

3.8.1 GCICC shall, within 20 business days of receipt, review ACS-F's cost proposal and implementation schedule. If found to be reasonable, GCICC will provide ACS-F with written approval of the cost estimate and implementation schedule and authorize ACS-F to perform the work. If GCICC finds any of the costs or the schedule to be unreasonable, GCICC shall notify ACS-F accordingly, identify those specific issues that it finds to unreasonable, and give ACS-F the opportunity to substantiate the costs or schedule to GCICC's satisfaction. If ACS-F and GCICC cannot reach agreement on the proposal, GCICC may request that ACS-F obtain competitive bids from ACS-F-approved contractors for the work. ACS-F will share the bids with GCICC and the parties will mutually agree to whom to award the bid.

3.8.2 GCICC and ACS-F will complete an acceptance walk through of those portions of the collocation arrangement constructed by ACS-F. Any exceptions noted during this acceptance walk through which constitutes a material change from the mutually agreed upon collocation request and detailed site requirements shall be corrected within a reasonable time.

3.9 Adjacent Collocation

3.9.1 Request for Collocation

3.9.1.1 A request for adjacent collocation must be submitted to ACS-F in writing. At a minimum, the request must include:

a. identification of the premise or point where collocation is requested

b. ground space requirements if on ACS-F property

c. distribution frame space requirements

d. building entrance facility requirements

e. power and ground requirements

f. type of equipment to be collocated and its intended use and

g. date GCICC requests for occupancy of collocated space. A site survey may be included with the request.

3.9.1.2 Within 5 business days of receipt of GCICC's request for collocation, ACS-F and GCICC will assign a SPOC for the collocation request. The SPOCs will work cooperatively and ACS-F will provide GCICC with access to engineering and facility records necessary to properly design collocation space, equipment layout, power systems, cable racks, cabling, etc.

3.9.1.3 Collocation by type has been requested and is currently approved under section 3.9.3 at the following locations:

I. Assumes UNE Switching (where GR303, DSS and PRI interfaces and power is available) purchased from ACS-F.

Adjacent Collocation Sites	oor Space Req'd (Sq. Ft.)	pprox. Space Dimensions (Ft.)	rame Space Req'd (Blocks)	Entrance Facilities Req'd (4" Ducts)	23" Rack Space Req'd	8VDC Power Req'd (Amps)
lobe	ote 1	ote 1	18	1	1	0
erling	ote 1	ote 1	8	1	1	0
an Horn	ote 1	ote 1	3	1	1	0
ale Road	ote 1	ote 1	6	1	1	0
mon Creek	ote 1	ote 1	8	1	1	0
ake Bay	ote 1	ote 1	6	1	1	30

Note 1: Equipment located in building space not leased from ACS-F or in right-of-way/ easement.

Note 2: Rack space is actually in the ACS-F equipment area and not part of the floor space requirement. It is most likely that GCICC will not need a full rack, but will need space for DSX panels.

Note 3: Floor space and power requirements are estimates. Actual requirements to be determined when detailed site requirements are submitted and approved under section 3.9.5.

II. Assumes UNE switching not purchased from ACS-F.

Adjacent Collocation Sites	oor Space Req'd (Sq. Ft.)	pprox. Space Dimensions (Ft.)	rame Space Req'd (Blocks)	Entrance Facilities Req'd (4" Ducts)	23" Rack Space Req'd	8VDC Power Req'd (Amps)
lobe	ote 1	ote 1	75	6	1	0
erling	ote 1	ote 1	30	2	1	0
an Horn	ote 1	ote 1	3	1	1	0
ale Road	ote 1	ote 1	5	1	1	0
mon Creek	ote 1	ote 1	15	2	1	0
ake Bay	ote 1	ote 1	12	2	1	30

Note 1: Equipment located in building space not leased from ACS-F or in right-of-way or easement.

Note 2: Rack space is actually in the ACS-F equipment area and not part of the floor space requirement.

Note 3: Floor space and power requirements are estimates. Actual requirements to be determined when detailed site requirements are submitted and approved under section 3.9.5.

3.9.2 Preliminary Site Survey

If ACS-F determines that a site survey is necessary to determine feasibility and/or approval of GCICC's request, ACS-F shall notify GCICC and afford GCICC the opportunity to be present at the survey. The preliminary site survey must be completed within 15 business days of GCICC's request for collocation.

3.9.3 Approval/Rejection of Request

Within 5 business days of the preliminary site survey, or no more than 20 business days from receipt of GCICC's request for collocation, ACS-F will approve or reject GCICC's request. If the request is rejected, the reason(s) for rejection must be included. If ACS-F fails to provide the reason(s) for rejection or if GCICC disagrees with the reason(s) for rejection or finds it unreasonable, ACS-F and GCICC will negotiate a mutually acceptable solution. At GCICC's election, ACS-F shall escort GCICC representatives on a tour of the premise or point at issue. If a mutually acceptable solution cannot be reached within 15 business days of ACS-F's notice of rejection, GCICC may request the matter be resolved through Dispute Resolution as set forth in this Agreement.

3.9.4 Pre-Construction Site Survey

Subsequent to ACS-F's approval of the request for collocation, GCICC may request a site survey to gather information necessary to develop detailed site requirements. ACS-F shall schedule the site survey within 5 business days of GCICC's request. The scheduled time shall allow for completion of the survey within 15 business days of the request.

3.9.5 Detailed Site Requirements

Subsequent to pre-construction surveys, GCICC will submit detailed site requirements to ACS-F for review, cost development and approval.

3.9.6 Approval of Detailed Site Requirements

ACS-F shall respond to GCICC within 10 business days of receipt of GCICC's detailed site requirements with ACS-F's approval or rejection of the detailed site requirements. If ACS-F rejects the detailed site requirements, the reason(s) for rejection will be provided. If the reason(s) for rejection are reasonable, GCICC will modify the detailed site requirements accordingly and resubmit to ACS-F. If GCICC finds the reason(s) for rejection unreasonable, ACS-F and GCICC will negotiate a mutually acceptable solution. If a mutually acceptable solution cannot be reached within fifteen (15) business days of ACS-F's notice of rejection, GCICC may request the matter be resolved through Dispute Resolution as set forth in this Agreement.

3.9.7 Cost Proposals and Acceptance

3.9.7.1 ACS-F shall, within 20 business days of approving GCICC's detailed site requirements, provide a cost estimate and implementation schedule for any work to be performed by ACS-F. The cost estimate will include an itemized list of all labor, materials, equipment, permits, and any other costs for which GCICC will be responsible.

3.9.7.2 Any work to be performed inside the collocation space, where such space is enclosed by a cage or other physical separation, may be performed by GCICC employees or GCICC contractors. Any work associated with the construction or preparation of the collocation space and any work to be performed on ACS-F property outside the collocation space must be performed by ACS-F.

3.9.8 Implementation Schedule

3.9.8.1 GCICC shall, within 20 business days of receipt, review ACS-F's cost proposal and implementation schedule. If GCICC finds any of the costs or the schedule to be unreasonable, GCICC shall notify ACS-F accordingly, identify those specific issues that it finds to unreasonable, and give ACS-F the opportunity to substantiate the costs or schedule to GCICC's satisfaction. If ACS-F and GCICC cannot reach agreement on the proposal, GCICC may request that ACS-F obtain competitive bids from ACS-F-approved contractors for the work. ACS-F will share the bids with GCICC and the parties will mutually agree to whom to award the bid.

3.9.8.2 GCICC and ACS-F will complete an acceptance walk through of those portions of the collocation arrangement constructed by ACS-F. Any exceptions noted during this acceptance walk through which constitutes a material change from the mutually agreed upon collocation request and detailed site requirements shall be corrected within a reasonable time.

3.10 Virtual Collocation

3.10.1 Request for Collocation

3.10.1.1 A request for virtual collocation must be submitted to ACS-F in writing. At a minimum, the request must include:

a. identification of the premise or point where collocation is requested,

b. floor space requirements,

c. distribution frame space requirements,

d. building entrance facility requirements, and

e. power and ground requirements

f. type of equipment GCICC requests ACS-F to install and its intended use and

g. date GCICC requests ACS-F to complete the installation A site survey may be included with the request.

3.10.1.2 Within five (5) business days of receipt of GCICC's request for collocation, ACS-F and GCICC will assign SPOCs for the collocation request. The SPOCs will work cooperatively and ACS-F will provide GCICC with access to engineering and facility records necessary to properly design collocation space, equipment layout, power systems, cable racks, cabling, etc.

3.10.2 Preliminary Site Survey
If ACS-F determines that a site survey is necessary to determine feasibility and/or approval of GCICC's request, ACS-F shall notify GCICC and afford GCICC the opportunity to be present at the survey. The preliminary site survey must be completed within 15 business days of GCICC's request for collocation.

3.10.3 Approval/Rejection of Request
Within five (5) business days of the preliminary site survey, or no more than twenty (20) business days from receipt of GCICC's request for collocation, ACS-F will approve or reject GCICC's request. If the request is rejected, the reason(s) for rejection must be included. If ACS-F fails to provide the reason(s) for rejection or if GCICC disagrees with the reason(s) for rejection or finds it unreasonable, ACS-F and GCICC will negotiate a mutually acceptable solution. At GCICC's election, ACS-F shall escort GCICC representatives on a tour of the premise or point at issue. If a mutually acceptable solution cannot be reached within fifteen (15) business days of ACS-F's notice of rejection, GCICC may request the matter be resolved through Dispute Resolution as set forth in this Agreement.

3.10.4 Pre-Construction Site Survey
Subsequent to ACS-F's approval of the request for collocation, GCICC may request a site survey to gather information necessary to develop detailed site requirements. ACS-F shall schedule the site survey within five (5) business days

of GCICC's request. The scheduled time shall allow for completion of the survey within fifteen (15) business days of the request.

3.10.5 Detailed Site Requirements
Subsequent to pre-construction surveys, GCICC will submit detailed site requirements to ACS-F for review, cost development and approval.

3.10.6 Approval of Detailed Site Requirements
ACS-F shall respond to GCICC within ten (10) business days of receipt of GCICC's detailed site requirements with ACS-F's approval or rejection of the detailed site requirements. If ACS-F rejects the detailed site requirements, the reason(s) for rejection will be provided. If the reason(s) for rejection are reasonable, GCICC will modify the detailed site requirements accordingly and resubmit to ACS-F. If GCICC finds the reason(s) for rejection unreasonable, ACS-F and GCICC will negotiate a mutually acceptable solution. If a mutually acceptable solution cannot be reached within 15 business days of ACS-F's notice of rejection, GCICC may request the matter be resolved through Dispute Resolution as set forth in this Agreement.

3.10.7 Cost Proposals and Acceptance

3.10.7.1 ACS-F shall, within 20 business days of approving GCICC's detailed site requirements, provide a cost estimate and implementation schedule for all work to be performed by ACS-F. The cost estimate will include an itemized list of all labor, materials, equipment, permits, maintenance, repair and any other costs for which GCICC will be responsible.

3.10.7.2 Any work to be performed utilizing virtual collocation shall be performed by ACS-F.

3.10.8 Implementation Schedule

3.10.8.1 GCICC shall, within 20 business days of receipt, review ACS-F's cost proposal and implementation schedule. If found to be reasonable, GCICC will provide ACS-F with written approval of the cost estimate and implementation schedule and authorize ACS-F to perform the work. If GCICC finds any of the costs or the schedule to be unreasonable, GCICC shall notify ACS-F accordingly, identify those specific issues that it finds to unreasonable, and give ACS-F the opportunity to substantiate the costs or schedule to GCICC's satisfaction. If ACS-F and GCICC cannot reach agreement on the proposal, GCICC may request that ACS-F obtain competitive bids from ACS-F-approved contractors for the work. ACS-F will share the bids with GCICC and the parties will mutually agree to whom to award the bid.

3.10.8.2 GCICC and ACS-F will complete an acceptance walk through of those portions of the collocation arrangement constructed by ACS-F. Any exceptions noted during this acceptance walk through which constitutes a material change from the mutually agreed upon collocation request and detailed site requirements shall be corrected within a reasonable time after the walk through by ACS-F.

3.11 Augmentation of Collocation Space

Subject to Section 6 of this Attachment, should GCICC need to augment floor space, distribution frame space, building entrance facilities, cabling, cable rack, equipment racks, power, ground, or any other facet of collocation at a premise or point where GCICC is already collocated, the augmentation request and process will be the same as the collocation application process for the type of collocation at issue.

3.12 Forecasted Space Requirements

Subject to Section 6 of the Attachment, annually, no later than June 30th, GCICC will inform ACS-F of its space requirements at ACS-F premises or points where space has not been available. ACS-F shall take GCICC's forecasted space requirements into account when planning renovations of existing facilities or construction or leasing of new facilities in/at the premises or points at issue. The forecasted requirements shall remain in effect for one year unless otherwise cancelled by GCICC.

Section 4 Rules and Regulations

4.1 Safety and Engineering Standards

4.1.1 ACS-F may not object to the collocation of equipment on the grounds that the equipment does not comply with safety or engineering standards that are more stringent than the safety or engineering standards that ACS-F applies to its own equipment.

4.1.2 ACS-F may not object to the collocation of equipment on the ground that the equipment fails to comply with National Equipment and Building Specifications performance standards.

4.1.3 If ACS-F denies collocation of a competitor's equipment, citing safety standards, ACS-F must provide to GCICC within five (5) business days of the denial a list of all like equipment that ACS-F locates within the premises in question, together with an affidavit attesting that all of that equipment meets or exceeds the safety standard that ACS-F contends GCICC's equipment fails to meet.

4.2 Security

4.2.1 ACS-F may require all reasonable security arrangements not prescribed by law to protect its equipment and ensure network reliability. ACS-F may only impose security arrangements that are as stringent as the security arrangements that ACS-F maintains at its own premises for its own employees or authorized contractors.

4.2.2 ACS-F will allow GCICC access to its collocated equipment 24 hours a day, seven days a week, without requiring either a security escort of any kind or delaying GCICC's employees', agents', or contractors' entry into ACS-F's premises. Where available, ACS-F shall allow GCICC's employees, agents and contractors unescorted access to restrooms with the exception of those restrooms that are located inside ACS-F's switchrooms. Access to restrooms inside ACS-F's switchrooms will require an escort.

4.2.3 GCICC's employees, agents and contractors must comply with the policies and practices of ACS-F pertaining to fire and safety.

4.2.4 Reasonable security measures that ACS-F may adopt include:

a. installing security cameras or other monitoring systems; or

b. requiring GCICC personnel to use badges with computerized tracking systems; or

c. requiring GCICC personnel to undergo the same level of security training, or its equivalent, that ACS-F's own employees, or third party contractors providing similar functions, must undergo; provided, however, that ACS-F may not require GCICC personnel to receive such training from ACS-F itself, but must provide information to GCICC on the specific type of training required so GCICC personnel can conduct their own training.

4.2.5 Within thirty (30) days of the Approval date, ACS-F shall provide contact names and telephone numbers for the personnel responsible for security, building and grounds, and environmental and safety issues.

4.2.6 GCICC will supply to ACS-F, and update as changes occur, a list of its employees and approved vendors who require access to the collocation space and common areas of the premises.

4.3 Construction and Scheduling

4.3.1 Before beginning delivery, installation, replacement or removal work for equipment and/or facilities located within the collocation space, GCICC must obtain ACS-F's written approval of GCICC's proposed scheduling of the work in order to coordinate use of temporary staging areas, freight elevators, and other building facilities. ACS-F may request additional information before granting approval and may require scheduling changes; however, approval will not be unreasonably withheld.

4.3.2 ACS-F has the right to inspect GCICC's completed installation of equipment and facilities occupying a collocation space and associated building entrance facilities. ACS-F also may make subsequent and periodic inspections of the GCICC's equipment and facilities. These subsequent periodic inspections will be made no more than once per month, except when they are required by public safety, fire or insurance agencies or in cases of emergencies. If GCICC is found to be in non-compliance with the terms and conditions of this Agreement, GCICC must modify its installation to achieve compliance. ACS-F will notify GCICC in writing two (2) days in advance of ACS-F initiated inspections, except in the case of emergencies, and GCICC shall have the right to be present at the time of the inspection.

4.3.3 In the event that an emergency or agency request necessitates an inspection, ACS-F will, as soon as reasonably possible after the emergency or agency inspection request, notify GCICC of the emergency or agency inspection request and the nature of the emergency or agency request. GCICC shall have the right to be present at the time the outside agency inspection takes place. ACS-F will, where practical, inform GCICC by telephone of any emergency-related activity that ACS-F or its subcontractors may be performing in the collocation space.

> **4.3.3.1** GCICC shall provide a written logbook for ACS-F's employees or contractors to sign when entering GCICC's physical collocation space.

4.3.4 With ACS-F's prior written consent, GCICC shall be permitted to use a portion of the ACS-F premises, central office and loading areas, if available, on a temporary basis during GCICC's equipment installation work in the collocation space. A GCICC representative must sign for all equipment deliveries requiring signatures of receipts. No ACS-F employee will accept delivery of GCICC's equipment. GCICC is responsible for protecting ACS-F's equipment, walls, and flooring within the staging area and along the staging route. GCICC will meet all ACS-F fire, safety and environmental requirements. All temporary staging areas will be vacated and delivered to ACS-F in a broom-clean condition upon

completion of the installation work. ACS-F may assess a cleaning charge for failure to comply with this obligation.

4.3.5 GCICC's employees, agents and/or contractors may only work on, modify, or have access to GCICC's equipment or facilities.

4.3.6 ACS-F shall provide GCICC with the escalation process (names, telephone numbers, and the escalation order) for any disputes or problems that might arise pursuant to GCICC's collocation.

4.4 Conditions on Use of Space

4.4.1 Neither the use and occupancy of space in which GCICC situates its equipment in ACS-F premises or points, nor the payments made by GCICC for the use of space in ACS-F's premises or points, shall create or vest, or is intended to create or vest, in GCICC (or in any other person) any property right or interest of any nature in any part of ACS-F's premises.

4.4.2 GCICC shall, at GCICC's expense, fully, promptly, and consistently comply with all statutes, ordinances, rules, regulations, orders, and requirements in effect during the term of this Agreement. GCICC shall not use or permit the use of the collocation space in any manner that will create waste, create a nuisance, or create a fire hazard. GCICC will not operate any equipment that causes interference with telecommunications facilities of ACS-F or others in the building.

4.4.3 ACS-F shall notify GCICC immediately of any interference with telecommunications facilities of ACS-F or others believed to be caused by GCICC's equipment. GCICC and ACS-F will, within 24 hours of notification by ACS-F, cooperatively work to expeditiously determine if the reported interference is caused by GCICC's equipment and, if so, eliminate the cause of the interference.

4.4.4 GCICC's use of collocation space within or upon ACS-F's premises or points is subject to any restriction or agreement which governs ACS-F's use of the premises or points, such as zoning restrictions, restrictive covenants in deeds or limitations in leases between ACS-F and the owner of the facility.

4.4.5 ACS-F shall not be responsible for

a. GCICC's personal property, furniture and trade fixtures located in the collocation space, or

b. damages caused by the negligent or intentional act or omissions of GCICC, GCICC's agents, contractors, employees or invitees. ACS-F

shall have no obligation to make repairs until a reasonable time after receipt of written notice from GCICC of the need for such repairs.

4.4.6 Upon demand of ACS-F, GCICC shall reimburse ACS-F for the cost of all repairs or maintenance that result from the misuse or neglect of the collocation space by GCICC, its agents, contractors, invitees or employees. Upon termination of GCICC's use and occupation of collocation space, GCICC shall surrender the space occupied to ACS-F in the same condition as received, broom clean, ordinary wear and tear excepted, unless otherwise agreed to in writing.

4.4.7 Except for installation of equipment, GCICC shall not make any alterations, improvements, or additions in, on, or about the occupied collocation space except as specifically permitted in writing by ACS-F.

4.4.7.1 GCICC may, with the prior written consent of ACS-F, have the right to provide additional fire protection systems within the collocation space; provided, however, that GCICC may not install or use sprinklers or carbon dioxide fire suppression systems within the building or the collocation space. If any governmental bureau, department or organization or ACS-F's insurance carrier requires that changes, modifications, or alterations be made to the fire protection system, or that additional stand alone fire extinguishing, detection or protection devices be supplied within the collocation space, such changes, modifications or additions shall be made by GCICC at its expense, following review and written approval by ACS-F prior to any work being done. If any governmental bureau, department or organization or ACS-F's insurance carrier requires that changes or modifications be made to the fire protection system or that additional stand alone fire extinguishing, detection or protection devices be supplied within that portion of the building in which the collocation space is generally located, such changes, modifications, or additions shall be made by ACS-F and GCICC shall reimburse ACS-F for the cost thereof in the same proportion as the square footage of the collocation space is to the total square footage of the affected portion of the building.

4.4.8 GCICC shall promptly pay all claims for labor or material furnished to or for GCICC, for which claims are or may be secured by any construction or similar lien against ACS-F's premises. GCICC shall not suffer or permit any lien to attach to the interests of ACS-F in the premises.

4.4.9 Any additions, non-trade fixtures, and improvements shall become the property of ACS-F and remain upon and be surrendered with the collocation space at the expiration of GCICC's occupancy; provided, however, that ACS-F may require GCICC to remove any additions and not-trade fixtures made by or for GCICC and to repair any damages caused by such a removal. GCICC's

equipment, personal property, furniture, and trade fixtures shall remain the property of GCICC and may be removed by GCICC provided, however, that if GCICC has not removed such items from the collocation space within 10 days after the termination of GCICC's use and occupancy of such space, then ACS-F may elect to retain the same as abandoned property. GCICC shall reimburse ACS-F for disposal of such abandoned property.

4.4.10 GCICC will comply with ACS-F's Central Office Policies and Procedures as may be amended from time to time. ACS-F will provide a copy of ACS-F's Central Office Policies and Procedures within 10 business days of the Approval Date of this Agreement. ACS-F will be responsible for providing GCICC with updates to the Central Office Policies and Procedures in a timely manner.

4.4.11 All space within the GCICC caged, physical and adjacent collocation space is dedicated to and controlled by GCICC and cannot be used without the approval of GCICC.

4.4.12 As requested by GCICC, ACS-F shall provide basic telephone service to the GCICC collocation space at tariffed rates. Upon GCICC's request, this service shall be available at the collocation space on the day that the space is turned over to GCICC by ACS-F.

Section 5 General Rules

5.1 Sidewalks, doorways, vestibules, halls, stairways, elevator lobbies, etc. shall not be used for storage of materials or disposal of trash.

5.2 Signs, advertisements, graphics or notices visible from in or outside the building are not permitted except as required by law or other local, state, or federal regulations.

5.3 GCICC shall not use an open flame anywhere within the building.

5.4 GCICC shall not tamper with or attempt to adjust temperature controls, fire detection/suppression devices. Environmental problems shall be referred to ACS-F's designated building representative.

5.5 No flammable or explosive fluids or material shall be kept or used within the building. GCICC shall comply with all applicable building and fire codes.

5.6 GCICC may not make any modifications, alterations, additions, repairs or decoration of the collocation space or the building in general.

5.7 Any ACS-F employee may request GCICC or GCICC's agent or contractor to stop work if in the judgment of the employee there is jeopardy to personal safety or potential damage to the building or equipment or facilities of ACS-F or others.

5.8 GCICC shall perform all light housekeeping services, i.e., dusting and rubbish removal within the collocation space. Rubbish shall be removed from the ACS-F facility for disposal by, and at the expense of, GCICC.

5.9 In those cases where GCICC is issued keys for access to the building, GCICC will accept responsibility for issuance of keys to its employees and retrieval of said keys upon termination of its employees.

5.9.1 ACS-F shall not charge for the issuance of keys nor shall it unreasonably limit the number of keys issued to GCICC, its agents, or contractors.

5.9.2 Except for electronic keys, a $250 charge will be levied for the loss of any key. There will be no charge for lost electronic keys.

5.9.3 GCICC shall notify ACS-F immediately of any lost keys.

5.9.4 GCICC's employees, agents and contractors are prohibited from making duplicates of keys issued by ACS-F.

5.9.5 At the expiration of GCICC's occupancy of a collocation space, GCICC shall surrender all keys, access cards and ACS-F-provided photo identification cards to the collocation space and the building to ACS-F.

5.10 GCICC will assure that all appropriate doors are closed at all times and are not propped open or left open unless otherwise approved by ACS-F in writing.

5.11 GCICC will follow all applicable ACS-F procedures that require notification or sign-in/sign-out of GCICC personnel upon entrance and exit of ACS-F facilities.

5.12 No canvassing, peddling, soliciting of funds, or sale or advertising of GCICC services shall be allowed in the building or grounds.

5.13 ACS-F shall not be liable or responsible for lost or stolen possessions or personal property of GCICC, its agents, contractors or employees.

5.14 ACS-F will provide no designated parking. GCICC may use ACS-F's parking facility if space allows and ACS-F's designated building representative grants written permission. Permission to use ACS-F's parking facility will not be unreasonably withheld.

5.15 GCICC's employees, its contractors and agents are not permitted to smoke anywhere within ACS-F's building or on ACS-F property except in designated smoking areas.

Mar 3 0 2004

5.16 Other Notifications

5.16.1 ACS-F will provide GCICC with written notification within ten (10) business days of any scheduled AC or DC power work or related activity in the collocated facility that will or might cause an outage or any type of power disruption to GCICC equipment located in ACS-F facility. ACS-F shall provide GCICC immediate notification by telephone of any emergency power activity that would impact GCICC equipment.

5.16.2 GCICC will provide ACS-F with written notification within ten (10) business days of any scheduled AC or DC power work or related activity in the collocated facility that will or might cause an outage or any type of power disruption to ACS-F equipment located in ACS-F facility. GCICC shall provide ACS-F immediate notification by telephone of any emergency power activity that would impact ACS-F equipment.

Section 6 Space Reservation

6.1 GCICC Space Reservation

6.1.1 GCICC may reserve additional floor space or frame space in ACS-F's premises where GCICC has or is ordering space for physical collocation if space is available for reservation.

6.1.2 GCICC can reserve an amount of space no more than the amount of space it currently utilizes or has ordered in the particular ACS-F premise.

6.1.3 GCICC must pay the annual Space Reservation Fee set forth elsewhere in this Agreement.

6.1.4 The priority of the reservation is established on a first-come, first-served basis as determined by the time that ACS-F receives the space reservation request form. Reservations will be date stamped upon receipt. The lowest priority reservation is that reservation with the most recent date stamp.

6.1.5 The reservation will be maintained until GCICC either terminates its collocation, cancels its order for additional space, or relinquishes its reservation by opting to not enforce its reservation.

6.1.6 When an order for physical collocation is received and all the unoccupied space is covered by reservations, the CLEC with the lowest priority reservation (option party) for which unoccupied space remains available after subtracting the space covered by reservations of higher priority reservations will be given the option of enforcing its reservation by paying the appropriate monthly rate for the space or relinquishing its reservation.

6.1.7 If the Option Party enforces its reservation, it must utilize the space for its intended purpose within 120 days or relinquish it.

6.1.8 If the CLEC with the lowest priority enforces its reservation, then the CLEC(s) with next higher priority reservation, for which unoccupied space remains available after subtracting the space covered by reservations of the remaining higher priority reservations, will be given the option of enforcing or relinquishing its reservations. As long as all CLECs with reservations for the available unoccupied floor space continue to enforce their reservations by paying the appropriate monthly rate for the space, no space will be available for new requests for physical collocation, frame space, entrance facilities or power.

6.1.9 The CLEC that relinquishes its reservation by declining to enforce its reservation may place a new reservation, but the reservation receives a new priority based on the time the new reservation is received in writing.

6.2 ACS-F Space Reservation

6.2.1 ACS-F may reserve ACS-F Central Office Floor Space under the following conditions.

6.2.2 ACS-F's space reservation priority will be determined in the same manner as the space reservation priority for CLECs. ACS-F must submit a space reservation request form to order to reserve space. This reservation request is date stamped and processed in the same manner as CLECs' space reservation requests.

6.2.3 ACS-F may reserve at least the amount of space reasonably necessary for the provision of a communications-related service, including interconnection and the provision of unbundled network elements; however, the total space reservation cannot exceed the space currently used by ACS-F.

6.2.4 ACS-F may enforce its reservation in the same manner in which the collocating CLEC enforces its reservation. ACS-F will impute the space rate to the ACS-F operations department for which the space is reserved.

6.3 Space Restrictions

Where GCICC has requested space reservation at an ACS-F premise or point and such reservation cannot be accommodated for technical reasons or because of space limitations, ACS-F shall take GCICC's projected collocation requirements into account when planning renovations of existing facilities or constructing or leasing new facilities in that premise or point.

Section 7 *Damage or Destruction*

7.1 If at any time during the term hereof the collocation space or the building of which it is a part is damaged, ACS-F may at ACS-F's option either

a. repair such damage as soon as reasonably possible at ACS-F's expense, in which event GCICC's use and occupancy of collocation space under this Agreement will continue without interruption, or

b. cancel and terminate GCICC's use and occupancy of collocation space under this Agreement, as of the date of the occurrence of such damage. ACS-F will give written notice to GCICC within thirty (30) days after the date of the occurrence of such damage of ACS-F's intention to either repair the damage at the collocation space or terminate GCICC's use and occupancy of the collocation space.

7.2 If at any time during the term hereof the collocation space or the building of which it is a part is totally destroyed from any cause (including any total destruction required by any authorized public authority), GCICC's use and occupancy of collocation space under this Agreement shall automatically terminate as of the date of such total destruction. ACS-F will inform GCICC of its plans to rebuild the collocation space or building as soon as practicable and will restore GCICC's collocation space as soon a practicable.

7.3 If the collocation space or the building of which it is a part is partially destroyed or damaged and ACS-F repairs or restores them pursuant to the provisions of this Section, the Floor Space Rate payable hereunder for the period during which such damage, repair or restoration continues shall be abated in proportion to the degree to which GCICC's use of the collocation space is impaired.

7.4 Protection of GCICC's Property
ACS-F will use reasonable efforts to avoid damage to GCICC's personal property, furniture and trade fixtures. The liability of ACS-F for damage to GCICC's personal property, furniture and trade fixtures is subject to the limitations in Section 8 of Part A.

7.5 Default by GCICC
The occurrence of any one or more of the following events shall constitute a default of the conditions for use and occupancy of collocation space by GCICC:

a. The vacating or abandonment of the central office space by GCICC.

b. The failure by GCICC to observe or perform any of the covenants or provisions of this Agreement to be observed or performed by GCICC, where this

failure shall continue for a period of thirty (30) days after written notice thereof from ACS-F to GCICC.

c. Any of the following events:

i. the making by GCICC of any general assignment, or general arrangement for the benefit of creditors;

ii. the filing by or the making by GCICC of any general assignment, or general arrangement of the benefit of creditors;

iii. the filing by or against GCICC of a petition to have GCICC adjudged as bankrupt or a petition for reorganization of arrangement under any law relating to bankruptcy (unless, in the case of a petition filed against, GCICC, the same is dismissed within 60 days);

iv. the appointment of a trustee or receiver to take possession of substantially all of GCICC's assets located in the collocation space or GCICC's use or occupancy of the collocation space, where use or occupancy is not restored to GCICC within 30 days; or

v. the attachment, execution or other judicial seizure of substantially all of GCICC's assets located in the collocation space or of GCICC's use or occupancy of the collocation space, which such seizure is not discharged within 30 days.

d. CICC's use of the collocation space causes disruption or threat of harm upon ACS-F's employees, facilities and equipment or other collocated CLEC's employees, facilities, and equipment services or GCICC taking actions violative of the Criminal Laws or otherwise not in keeping with the safety of the persons and property located at the ACS-F facility.

e. CICC's use or occupancy of the collocation space, or the operation of GCICC's equipment, alone or in combination with the uses of others, interferes with the operation of ACS-F's telecommunications equipment or facilities or the employees, facilities, and equipment of another CLEC collocation customer.

f. Failure to keep accounts current.

7.6 Remedies of ACS-F

In addition to any remedies ACS-F may have in law or equity, in the event of any default, ACS-F may at any time thereafter terminate GCICC's use or occupancy of the collocation space. ACS-F shall be entitled to recover from GCICC all damages incurred by ACS-F by reason of GCICC's default including but not limited to, the cost of

terminating GCICC's use and occupancy of the collocation space and reasonable attorney's fees.

2004

7.7 Condemnation

7.7.1 If the collocation space or the building of which it is part or any portion thereof are taken under the power of eminent domain, or sold under the threat of the exercise of the power (all of which are called "Condemnation"), GCICC's uses and occupancy of the collocation space shall terminate as of the date the condemning authority takes title or possession, whichever first occurs.

7.7.2 Any award for the taking of all or any part of the collocation space under the power of eminent domain or any payment made under threat of exercise of such power shall be the property of ACS-F; provided, however, that notwithstanding the foregoing, GCICC shall have the right to maintain a separate claim against the condemning authority for its loss of business, moving costs, or loss or damage to its personal property and removable fixtures, provided such claim does not diminish or impair ACS-F's claim.

7.7.3 In the event that ACS-F is notified by a condemning authority that the collocation space will become subject to a taking under the power of eminent domain, ACS-F shall promptly notify GCICC in writing that GCICC's use and occupancy of the collocation space shall terminate.

7.8 Subordination

GCICC's use and occupancy of the collocation space, at ACS-F's option, shall be subordinate to any ground lease, mortgage, deed of trust, or any other hypothecation for security now or hereafter placed upon the real property of which the collocation space is a part and to any and all advances made on the security thereof and to all renewals, modifications, consolidations, replacements and extensions thereof. GCICC will execute, at ACS-F's request, all documents necessary to effectuate any such subordination, hypothecation or security interest.

7.9 Warranty and Exclusions

To the extent ACS-F provides materials or services used in construction or modification of the premises to prepare the central office for occupancy by GCICC, ACS-F warrants that the construction services will be performed in a workmanlike manner and construction materials shall be free from known defects. **ACS-F MAKES NO OTHER WARRANTIES, EXPRESS OR IMPLIED, AND SPECIFICALLY DISCLAIMS ANY WARRANTIES OF MERCHANTABILITY OR FITNESS FOR A PARTICULAR PURPOSE.**

7.10 Limitation of Liability

In addition to the limitations contained in Section 8 of Part A, the following provision applies: To the extent that any damage, destruction or loss of use of any of GCICC's

equipment, cable, or other telecommunications facilities and equipment ("Facilities") is caused by ACS-F's sole negligence and was not caused by any negligence or willful misconduct of GCICC but is not covered by the insurance required to be carried by GCICC, ACS-F's liability is limited to the repair or replacement of the Facilities.

Section 8 Rate Categories

8.1 Site Preparation

The Site Preparation rate category provides for charges for costs incurred by ACS-F for modifications or additions that must be made to ACS-F's premises or points to accommodate GCICC's collocation and installation of GCICC's equipment. These modifications include, but are not limited to, security devices, additions to and distribution of heating, ventilation and air conditioning, AC power circuit, DC power, and necessary space modifications. The Site Preparation charge is a non-recurring charge determined on a per site basis when the detailed site requirements are developed and approved.

8.2 Floor Space

The Floor Space rate category provides for per-square foot increments of floor space located in or upon the ACS-F's premises used and occupied by GCICC. The Floor Space rate will be charged on a monthly basis. The Floor Space rate will include the associated environmental supports such as fire suppression, heating, power, backup power, and air conditioning equivalent to ACS-F's central office equipment environment at that location.

8.3 Ground Space

The Ground Space rate category provides for per-square foot increments of ground space on the ACS-F's property used and occupied by GCICC. The Ground Space rate will be charged on a monthly basis.

8.4 Building Entrance Facility

The Building Entrance Facility rate category provides for GCICC's use of conduit duct space between the designated manhole and the ACS-F cable vault. The Building Entrance Facility rate category will be charged on a monthly basis.

8.5 Power Consumption

8.5.1 The Power Consumption rate category provides for the consumption of –48 Volt DC Power. This rate is applied per 15-ampere draw and will be charged on a monthly basis.

8.5.2 AC power will be provided as part of the floor space or through a separate meter based billed directly to GCICC.

8.6 Distribution Frame Space
The Distribution Frame Space rate category provides for space on the main distribution frame to mount connecting blocks. Each block will terminate 100 copper pairs (+/- 20%). Distribution Frame Space will be charged on a monthly basis.

8.7 Cable Rack Space
The Cable Rack Space rate category provides space outside the GCICC collocation space to install cable rack necessary for the routing of cables between the GCICC space and other places inside or upon ACS-F premises. Cable Rack Space will be provided in increments of 50 linear feet and charged on a monthly basis. A 'linear foot' of cable rack includes cable rack up to 24" in width and the first 12 inches of space above the cable rack.

8.8 Relay Rack Space
The Relay Rack Space rate category provides space for GCICC to install cross-connect panels, such as DSX-1, DSX-3, and Fiber Distribution Panels. Relay racks will be 23" wide. Relay Rack Space will be charged in rack unit increments (1.75") on a monthly basis.

8.9 Space Reservation

8.9.1 Floor Space
The Floor Space Reservation rate category provides for the processing and maintenance of GCICC's space reservation for floor space within or upon ACS-F premises or points. The Floor Space Reservation charge is a non-recurring charge based on the number of square feet reserved and is charged annually.

8.9.2 Distribution Frame Space
The Distribution Frame Space Reservation rate category provides for the processing and maintenance of GCICC's distribution frame space reservation for space on the main distribution frame. The Distribution Frame Space Reservation charge is a non-recurring charge based on the number of block spaces reserved and is charged annually.

8.10 Collocation Request Application Fee
A application fee of $2000.00 per site requested will be charged to GCICC for each request submitted.

PART C – ATTACHMENT VI

-

RIGHTS OF WAY (ROW), CONDUITS, POLE ATTACHMENTS

Section 1 Introduction

This attachment sets forth the requirements for Rights of Way, Conduits and Pole Attachments

Section 2 Requirements

2.1 General

2.1.1 ACS-F shall make poles, ducts, conduits, conduit systems, and other ROW available to GCICC for Attachments under the terms and conditions set forth in this Section 2.

2.1.2 ACS-F shall provide GCICC equal and non-discriminatory access to Poles, ducts, conduits, and other ROW, it owns or controls. Such access shall be provided on terms and conditions equal to that provided by ACS-F to itself or to any other party consistent with Section 224 of the Act. Further, ACS-F shall not preclude or delay allocation of these facilities to GCICC because of the potential needs of itself or of other parties, except for work in progress, which may be retained for ACS-F facilities deployment within three hundred sixty five (365) calendar days of the date of the formal GCICC request.

2.1.3 Each of the Parties shall designate to the other, on the basis of specific operating regions, single points of contact for negotiating all issues relating to implementation of this Section 2. The single points of contact shall also be the contacts for all notices and demands, offers and acceptances under this Section 2, unless otherwise agreed in writing by the Parties.

2.1.4 Excepting work in progress as described above, and maintenance and emergency ducts as provided below, all usable but unassigned space on Poles, or in ducts, conduits, or other ROW owned or controlled by ACS-F shall be available for the attachments of GCICC, ACS-F or other providers of Telecommunications Services or cable television systems. ACS-F may reserve for emergency and maintenance purposes one duct, conduit and inner duct in each conduit section of its facility routes. ACS-F shall make its maintenance ducts available to GCICC for emergency restoration. GCICC will pay the appropriate duct fees while it uses ACS-F's maintenance/emergency duct.

2.1.5 All GCICC facilities placed in or upon ACS-F ROW, conduits and poles shall be clearly tagged or labeled with GCICC ownership identification so that it may be readily identified by ACS-F or its contractors as GCICC facilities.

2.1.6 Ducts and Conduits
Access to ACS-F ducts, conduits and conduit systems by GCICC or its designated personnel or contractors shall be provided on an escorted basis and upon a reasonable request for access to such ducts, conduits and conduit systems. GCICC shall pay for one access escort based on an hourly rate of the appropriate level of escorting personnel as determined by ACS-F, unless ACS-F and GCICC have reached agreement that no escort is necessary, which may be agreed to on a case by case basis. Such escort service shall be available on a reasonable basis 24 hours per day. GCICC is strictly prohibited from performing any work on ACS-F's facilities or systems. GCICC has access to ACS-F's ROW only to perform work on or protect its own facilities and system.

2.2 Space Availability Requests

2.2.1 GCICC may request information regarding the availability and conditions of poles, ducts, conduits and other ROW prior to the submission of Attachment Requests (as defined below). ACS-F shall provide information regarding the availability and condition of ACS-F's Poles, ducts, conduits or other ROW for Attachments within fifteen (15) business days of a request. If ACS-F is unable to inform GCICC about availability and conditions within such fifteen-day interval, ACS-F shall advise GCICC within ten (10) business days after receipt of GCICC 's information request and will seek a mutually satisfactory time period for ACS-F's response, which in no event shall exceed thirty (30) calendar days. If ACS-F's response requires a field-based survey, GCICC shall have the option to be present at the field-based survey and ACS-F shall provide GCICC at least two (2) calendar days notice prior to the start of such field survey. During and after the field based survey, ACS-F shall allow GCICC personnel (with ACS-F escort) to enter manholes and view Pole structures to inspect such structures in order to confirm usability or assess the condition of the structure.

2.2.1.1 In the event ACS-F determines there are no ducts, space available on Poles, conduits or other ROW, GCICC may request that the Parties meet to explore alternative solutions suitable for GCICC.

2.2.2 Route Maps
ACS-F shall make existing route maps of Poles, ducts, conduits or other Right of Way available to GCICC, at a city level, at ACS-F's facilities within two (2) business days and if such maps need to be generated, within ten (10) business days of GCICC's request. Preparation of such maps requested by GCICC shall be accommodated by ACS-F on a reasonable basis and at GCICC's expense, plus a reasonable administrative fee. In making these maps and drawings available, ACS-F makes no express or implied warranty as to the accuracy of these maps and drawings, except that they reflect the equivalent accuracy and timeliness of information used by ACS-F in its operations.

2.2.3 ACS-F shall invoice GCICC an administrative fee equal to one hundred percent (100%) of the direct cost plus overhead of providing maps and drawings, in addition to the direct cost of copying any requested maps or drawings.

2.3 Attachment Requests

2.3.1 ACS-F agrees to permit GCICC to place GCICC's facilities on or in ACS-F's Poles, ducts, conduits, and other ROW pursuant to Attachment requests from GCICC approved in accordance with this Section 2, on the terms and conditions set forth herein and in the "Attachment Request". All Pole Attachment requests submitted by GCICC must include pole calculations acceptable to ACS-F. The calculation acceptable to ACS-F will be industry standard.

2.3.2 GCICC may submit a written Attachment Request at any time on a form to be designated by ACS-F, to ACS-F. An Attachment Request shall be deemed properly submitted if it identifies with specificity the ACS-F Poles, ducts, conduits, or other ROW for which GCICC seeks Attachment. ACS-F shall approve any properly submitted Attachment Request within ten (10) business days, if the space has previously been determined to be available under the procedures set forth in Section 2.2.1. If GCICC has not previously submitted a space availability request as outlined in Section 2.2.1, GCICC will be referred to Section 2.2.1. No Attachments shall be placed on any ACS-F Pole identified in an Attachment Request until the Attachment Request has been approved by ACS-F. GCICC may submit subsequent Attachment Requests as needed. GCICC shall have fourteen (14) calendar days after ACS-F's return of the approved Attachment Request to GCICC to execute the Attachment Request and return the same to ACS-F. If GCICC does not return the Attachment Request within the fourteen (14) calendar day interval specified above, then such request shall be null and void and such ROW shall become immediately available to other parties. The approved Attachment Request shall serve as the binding attachment contract between the Parties.

> **2.3.2.1** ACS-F and GCICC may provide advance copies of projects that propose the construction of, or any activity that would change the available space on poles, conduits, and or direct buried facilities. The advance copies would depict the proposed routing and structure specifications. The purpose of this information is to provide both ACS-F and GCICC the opportunity to share in the design and joint use of a structure.

2.3.3 Together with ACS-F's notice of approval of an Attachment Request submitted by GCICC, ACS-F shall also provide an estimate of the Make Ready Work costs associated with making the space available for GCICC's Attachment. ACS-F shall complete any Make Ready Work required to enable GCICC to install its facilities at both a reasonable cost and within a reasonable period of time, both

of which shall be agreed upon in writing by ACS-F and GCICC. If such agreement does not occur within ten (10) business days of ACS-F's provision of a quote for such work or GCICC determines the quote is too high, GCICC may request ACS-F hire outside contractors to complete the Make Ready Work at GCICC's expense. All Make Ready Work on GCICC's owned facilities shall be done by GCICC personnel and or its approved contractor. Where GCICC submits an Attachment Request and subsequently fails to return an executed Attachment Request within fourteen (14) calendar days of ACS-F's notice of approval, GCICC shall reimburse ACS-F for its reasonable cost to provide pre-ordering information and any site survey work and the Attachment Request shall become null and void. Upon acceptance of an approved Attachment Request by GCICC and its return to ACS-F, ACS-F shall bill GCICC for any Make Ready Work non-recurring charges. Upon completion of any required Make Ready Work by ACS-F or upon receipt of the approved Application Request by ACS-F, whichever is later, written notice shall be provided to GCICC granting access to the attachment and advising GCICC of the date that monthly billing for such attachment shall commence. GCICC shall have one hundred eighty (180) calendar days to begin attachment and/or installation of its facilities after receipt of such notice. Any such construction shall be completed by the end of three hundred sixty-five (365) calendar days after receipt of such notice, unless GCICC notifies ACS-F differently and ACS-F agrees to such delay. GCICC's notification to ACS-F shall be provided at least sixty (60) calendar days prior to the expiration of the three hundred sixty-five (365) calendar day period. If GCICC does not begin construction within this time frame, ACS-F will cease monthly billing to GCICC and the access to the ROW and the Attachment Request shall be deemed null and void.

2.3.4 ACS-F shall make space available to GCICC as soon as any Make Ready Work to be provided by ACS-F, as described in Section 2.3.3, is completed. At that time, GCICC shall have the right, subject to the terms and conditions of this Agreement, to place and maintain the facilities described in the Attachment Request in the space designated on or in ACS-F's Poles, ducts, conduits, and other ROW identified therein. GCICC may, at its option, use GCICC or GCICC-designated personnel, which GCICC shall identify to ACS-F prior to beginning construction, to attach its equipment to ACS-F structures, subject to ACS-F's written agreement with the proposed construction methods proposed by GCICC to perform such work. When GCICC places and or maintains facilities on ACS-F property under any provisions of this Section 2, they must either use ACS-F personnel or ACS-F approved contractors to perform such work. Except for Pole Attachments ACS-F may (at ACS-F's option) provide a qualified inspector to accompany GCICC or its contractors and GCICC shall pay for same based on an hourly rate. ACS-F may stop GCICC or its contractors' construction activities if the work is not performed in accordance with the industry standards, practices, and applicable NESC, and OSHA regulations as approved by ACS-F. Any such approval shall not be unreasonably withheld, delayed or denied. In the event

ACS-F believes GCICC or GCICC-designated personnel are improperly or incorrectly performing construction, performing construction in an unsafe manner, or are in violation of any applicable NESC or OSHA regulations, ACS-F may stop construction and shall immediately notify GCICC of the situation. GCICC and ACS-F will jointly determine the next course of action to eliminate any problems and move quickly to resume construction.

2.3.5 GCICC agrees to pay ACS-F the Make Ready Work costs within sixty (60) business days of receiving ACS-F's invoice.

2.3.6 ACS-F will provide GCICC with answers to an environmental, health and safety questionnaire for each ACS-F facility in or on which GCICC seeks an Attachment. GCICC may provide this questionnaire with its Attachment Request and ACS-F shall return it to GCICC with the approval of GCICC's Attachment Request.

2.4 Authority to Place Attachments

2.4.1 Before GCICC places any Attachment pursuant to an approved Attachment Request, GCICC shall submit evidence of its authority to erect and maintain the facilities to be placed on ACS-F's facilities within the public streets, highways and other thoroughfares or on private property, where such additional authority is required by law. GCICC shall be solely responsible for obtaining all necessary licenses, authorizations, permits, and consents from federal, state and municipal authorities that may be required to place Attachments on ACS-F's facilities.

2.4.2 ACS-F shall not unreasonably intervene against or attempt to delay the granting of any necessary licenses, authorizations, permits or consents from federal, state and municipal authorities or private property owners that may be required for GCICC to place its Attachments on or in any Poles, ducts, conduits, or other ROW that ACS-F owns or controls.

2.4.3 If any license, authorization, permit or consent obtained by GCICC is subsequently revoked or denied for any reason, permission to attach to ACS-F's facilities shall terminate immediately and GCICC shall remove its Attachments (if any) within one hundred twenty (120) calendar days. GCICC may, at its option, litigate or appeal any such revocation or denial and if GCICC is diligently pursuing such litigation or appeal, GCICC may continue to maintain its Attachment. In doing so, GCICC agrees to defend and indemnify ACS-F from and against any and all costs resulting from GCICC's continuation of the Attachment which is the subject of such litigation or appeal.

2.5 Capacity

2.5.1 When there is insufficient space on a Pole or in a ACS-F conduit to accommodate a GCICC requested Attachment or occupancy, ACS-F shall:

a. replace the Pole or conduit with one of greater height or capacity; or

b. place additional Poles or conduits in the ROW. GCICC shall be obligated to reimburse ACS-F for its costs incurred to complete the work. If ACS-F cannot complete the work in a timely manner as reasonably determined by GCICC, then GCICC may cause ACS-F to contract the work out to better meet its time needs.

2.5.2 If the Pole or Conduit is at 100% capacity, either at maximum or over loaded in the case of a Pole, or out of capacity in the case of a Conduit System, proportional share of costs will be evaluated and shared if there is any net gain in capacity above the requested capacity to accommodate GCICC. Reasonable engineering, planning and joint usage will always be considered.

2.5.3 ACS-F shall permit GCICC to break out of ACS-F conduit and to maintain facilities within conduit space used by GCICC and, where required by ACS-F, shall provide GCICC designated personnel with one escort and GCICC shall pay for such escort based on an hourly rate. Such escort service shall be available twenty-four (24) hours per day each day of the week.

2.5.4 ACS-F shall permit manhole interconnections and breaking out of ACS-F manholes and shall provide GCICC with sufficient space in manholes for the racking and storage of cable as requested by GCICC. ACS-F reserves the right to deny nonstandard requests to break out of manholes where the location in which GCICC wants to break out is blocked by a cable rack.

2.5.5 ACS-F shall take all reasonable measures to allow access and/or egress to all conduit systems. This shall include but not be limited to ACS-F's removal, upon GCICC's request, of any retired cable for conduit systems to allow for the efficient use of conduit space within a reasonable period of time. If the Parties are unable to agree on what is reasonable (in terms of measures or time intervals), the matter may be submitted in accordance with the Dispute Resolution Procedures of this Agreement by either Party.

2.5.6 Where a spare inner duct does not exist, ACS-F shall install an inner duct in a spare ACS-F conduit. GCICC shall pay all of ACS-F's costs for this work within thirty (30) days of receipt of the invoice. The Make Ready Work process of Section 2 shall govern the installation of such inner duct, that is, if ACS-F cannot complete the work in a timely manner as reasonably determined by GCICC, then GCICC may cause ACS-F to contract the work out to better meet their time needs.

2.5.7 Neither Party shall attach, or permit other entities to attach facilities on existing facilities of the other without the other Party's prior written consent. Such consent will not be unreasonably withheld if the requested use is to facilitate use of the ROW by ACS-F or any other Party on a temporary basis until such reasonable time as the ROW can be expanded.

2.5.8 GCICC acknowledges that, from time to time, it may be necessary or desirable for ACS-F to change out Poles, relocate, reconstruct, or modify portions of its conduit system or rearrange facilities contained therein or connected thereto and that such changes may be necessitated by ACS-F's business needs or by factors outside of ACS-F's control, such as the decision by a municipality to widen streets or authorized application of another entity seeking access to ACS-F's Poles or conduit systems. GCICC agrees that GCICC will, upon ACS-F's request and at ACS-F's expense, but at no cost to GCICC so long as no additional cost is incurred by ACS-F as a result of GCICC being attached, participate with ACS-F (and other licensees) in the relocation, reconstruction, or modification of ACS-F's conduit system or facilities rearrangement.

2.6 Sharing of Right of Way

ACS-F shall offer the use of such ROW it has obtained from a third party to GCICC, to the extent that ACS-F owns or controls the ROW, or to the extent the agreement with the third party reasonably permits ACS-F to grant such access to GCICC.

2.7 Emergency Situations

Within fifteen (15) business days after the Approval Date of this contract, ACS-F and GCICC shall mutually agree on a non-discriminatory priority method to access ACS-F manholes and conduits in emergency situations.

2.8 Attachment Fees

2.8.1 GCICC shall pay ACS-F an Attachment fee consistent with the Act, the FCC's implementing rules and regulations promulgated thereunder, and/or any relevant state Commission order, for each ACS-F facility upon which GCICC obtains authorization to place an Attachment. The Parties agree that any new FCC rules and regulations setting forth a new methodology for determining the Attachment fee shall govern the establishment of the pricing of Attachments.

2.8.2 ACS-F shall maintain an inventory of the ACS-F facilities occupied by GCICC based upon the cumulative facilities specified in all Attachment Requests approved in accordance with this section. GCICC shall provide ACS-F with "as built" drawings after each Attachment is completed. GCICC shall have the right to remove any Attachment at any time, and it shall be GCICC's sole responsibility to notify ACS-F of any and all removals by GCICC of its Attachments from ACS-F's facilities. Such notice shall be provided to ACS-F at least thirty (30) calendar

days prior to the removal of the Attachment and shall take the form of a notice of removal. GCICC shall remain liable for an Attachment fee for each ACS-F facility included in all approved Attachment Requests until a notice of removal has been received by ACS-F or GCICC cancels an Attachment pursuant to Section 2.13. ACS-F may, at its option, conduct a physical inventory of the Attachments for purposes of determining the Attachment fees to be paid by GCICC under this Section 2.

2.9 Additions and Modifications to Existing Attachments

2.9.1 GCICC shall not modify, add to or replace facilities on any pre-existing Attachment without first notifying ACS-F in writing of the intended modification, addition or replacement at least thirty (30) calendar days prior to the date the activity is scheduled to begin. The required notification shall include:

a. identification of the impacted Attachment

b. the date the activity is scheduled to begin

c. a description of the planned modification, addition or replacement

d. a representation that the modification, addition or replacement will not require any space other than the space previously designated for GCICC's Attachments, and

e. a representation that the modification, addition or replacement will not impair the structural integrity of the facilities involved. In the event of any modifications to GCICC facilities on a pole or in a conduit system by ACS-F, ACS-F will notify GCICC promptly once they determine the work is necessary, but in no case no less than five (5) business days in advance of the said work commencing.

2.9.2 If the modification, addition or replacement specified by GCICC in its notice will require more space than that currently allocated to GCICC or will require the reinforcement, replacement or an addition of support equipment to the facilities involved in order to accommodate GCICC's modification, addition or replacement, GCICC will submit an Attachment Request in compliance with Section 2.3 in order to obtain authorization for the modification, addition or replacement of its facilities.

2.10 Noncompliance

2.10.1 If, at any time, ACS-F determines that GCICC's facilities or any part thereof have not been placed or maintained or are not being used in accordance with the requirements of this Section, ACS-F may send a written notice to GCICC

specifying the alleged noncompliance. If GCICC does not dispute ACS-F's assertion in writing within thirty (30) calendar days of receipt thereof, GCICC will, within sixty (60) calendar days of receipt of the notice of noncompliance, provide ACS-F with a schedule for bringing GCICC's facilities into compliance (which schedule shall be subject to ACS-F's agreement, which agreement shall not be unreasonably withheld) and shall bring such facilities into compliance within the time periods specified in such schedule. If the schedule can not be agreed to within ten (10) business days, the issue will be resolved through the Dispute Resolution Procedure.

2.10.2 If GCICC disputes ACS-F's assertion of noncompliance, GCICC shall notify ACS-F of the basis of GCICC's belief that GCICC's facilities are compliant. If the Parties are unable to agree on whether a noncompliance exists within thirty (30) calendar days of receipt of the noncompliance notice by GCICC, then the issue shall be resolved pursuant to the Dispute Resolution Procedures.

2.11 Surveys and Inspections of Attachments

2.11.1 The exact location of Attachments on or in ACS-F's facilities may be determined through a survey. If so requested, GCICC and/or any other entity owning or jointly owning the facilities with ACS-F may participate in the survey.

2.11.2 Apart from surveys conducted in accordance with Section 2.11.1 above, ACS-F shall have the right to inspect any Attachment on or in ACS-F's facilities as conditions may warrant. No joint survey or inspection by ACS-F shall operate to relieve GCICC of any responsibility, obligation or liability assumed under this Agreement.

2.12 Notice of Modification or Alteration of Poles, Ducts, Conduits, or Other ROW by ACS-F

If ACS-F plans to modify or alter any ACS-F facilities upon which GCICC has Attachments, ACS-F shall provide GCICC notice of the proposed modification or alteration at least sixty (60) calendar days prior to the time the proposed modification or alteration is scheduled to take place. If GCICC decides not to modify or add to its existing Attachment, GCICC shall participate at no cost in such modification and rearrangement. If GCICC adds to or modifies its facilities GCICC shall be charged its proportionate share of the reasonable costs incurred by ACS-F for such modification or rearrangement. GCICC shall make all rearrangements of its facilities within such period of time, which shall not be less than sixty (60) calendar days, as is jointly determined to be reasonable by the Parties based on the amount of rearrangements necessary and a desire to minimize chances for service interruption or facility-based service denial to an GCICC customer.

2.13 Termination of Section 3 or An Individual Attachment by GCICC

2.13.1 This Section 2 may be terminated by GCICC any time prior to the expiration of its term by providing written notice to ACS-F of its intent to terminate not less than ninety (90) calendar days prior to the date such termination is to become effective. Within one hundred twenty (120) calendar days after the date this Section 2 is terminated, GCICC shall cause all of its Attachments to be removed from all of ACS-F's Rights of Way. In the event GCICC fails to remove its Attachments as required by this Section 2, ACS-F shall have the option to remove all such Attachments and store them in a public warehouse or elsewhere or dispose of them at the expense of and for the account of GCICC without ACS-F being deemed guilty of trespass or conversion, and without ACS-F becoming liable for any loss or damages to GCICC occasioned thereby.

2.13.2 ACS-F may terminate, at any time, an Attachment under this Agreement upon thirty (30) calendar days in connection with any taking or condemnation of property on which such Attachment is located by a competent authority for any public use or purpose.

2.14 Abandonment

Nothing in this Agreement shall prevent or be construed to prevent ACS-F from abandoning, selling, assigning or otherwise disposing of any Poles, conduit systems, or other ACS-F property used for Attachments, provided, however, that ACS-F shall condition any such sale, assignment or other disposition subject to the rights granted to GCICC pursuant to this Agreement. ACS-F shall promptly notify GCICC of any proposed sale, assignment or other disposition of any facilities or other ACS-F property used for GCICC 's Attachments.

2.15 Dispute Resolution Procedures

If either Party has declared the other in default of any provisions of this Attachment VI, or has otherwise notified the other Party that it is not in compliance with the terms of this Section 2, either Party may invoke the Dispute Resolution Procedures, described in Section 22 of this Agreement. In the event either Party invokes the Dispute Resolution Procedures as provided in this Agreement, ACS-F will continue to process Attachment Requests pursuant to this Section 2.

PART C – ATTACHMENT VII

LOCAL NUMBER PORTABILITY

Section 1 ACS-F Provision of Local Number Portability

ACS-F shall provide Local Number Portability (LNP) in accordance with requirements of the Act and FCC Rules and Regulations. LNP shall be provided through the use of a Local Routing Number (LRN) database solution, implemented by the Approval Date of this Agreement or upon entry by GCICC into local competition in the ACS-F service area, whichever is later.

PART C – ATTACHMENT VIII

GENERAL BUSINESS REQUIREMENTS

Section 1 Procedures

1.1 ACS-F shall bill GCICC for each service supplied by ACS-F to GCICC pursuant to this Agreement at the rates set forth in this Agreement. GCICC shall bill ACS-F for each service supplied by GCICC to ACS-F pursuant to this Agreement at the rates set forth in this Agreement. The bill will be transmitted electronically unless otherwise approved by the billed party. The bill shall contain sufficient detail so that the data can be manipulated and sorted, and summarized by billing codes.

1.2 ACS-F and GCICC shall provide a contact for billing questions or problems that may arise during the implementation and performance of the terms and conditions of this Agreement.

1.3 Subject to the terms of this Agreement GCICC and ACS-F shall pay invoices within thirty (30) days from the date the invoice is issued. If the payment due date is a Saturday, Sunday or has been designated a bank holiday payment shall be made the next business day.

1.4 ACS-F shall issue any applicable recurring cost credits to GCI on a monthly basis pursuant to the terms of Part C, Attachment X.

Section 2 Revenue Protection

ACS-F and GCICC shall make available, at parity with what ACS-F or GCICC provides to itself, its Affiliates and other local telecommunications CLECs, all present and future fraud prevention or revenue protection features, including prevention, detection, or control functionality embedded within any of the Network Elements or Unbundled Network Elements.

Section 3 Provision of Subscriber Usage Data

This Section sets forth the terms and conditions for the provision of Recorded Usage Data. Usage data will be provided only to the extent that ACS-F bills GCICC for the usage and normally records that usage for its own use.

Section 4 Procedures

4.1 General

4.1.1 ACS-F shall record and provide to GCICC all usage originating from GCICC subscribers using service ordered by GCICC, where ACS-F bills GCICC for the usage and records those same services for ACS-F subscribers.

4.2 Retention of Records:

ACS-F and GCICC shall, to the extent technically feasible, record call detail associated with each call originated or terminated using interconnection trunks. ACS-F and GCICC shall maintain a machine readable back-up copy of the message detail provided to the other party for a period of at least 2 years. During this period, either party shall provide any data back-up to the other upon the request and with concurrence to pay time and materials to produce the data and deliver it.

4.3 Recorded Usage Data

ACS-F shall provide Recorded Usage Data to GCICC on a schedule agreed to by the parties. In an emergency, the parties will work together to provide specific recorded usage within two business days of the request.

4.4 GCICC shall provide a contact responsible for receiving usage transmitted by ACS-F and receiving usage tapes from a courier service in the event of a facility outage.

4.5 Lost Data

GCICC Recorded Usage Data determined to have been lost, damaged or destroyed as a result of an error or omission by ACS-F in its performance of the recording function shall be recovered by ACS-F, on a non-discriminatory basis, at no additional charge to GCICC to the extent it is recovered as part of ACS-F's normal recovery operations. For usage data that GCICC relies on to bill its end users, ACS-F will not bill if the data is recovered and transmitted to GCICC more than three months after the usage occurs. For all other data, ACS-F will not bill if the data is recovered more than one year after usage occurs.

4.6 Testing, Changes and Controls

The Recorded Usage Data, EMR/EMI format, content, and transmission process shall be tested as agreed upon by GCICC and ACS-F.

4.7 Periodic Review: Control procedures for all usage transferred between ACS-F and GCICC will allow periodic review. This review may be included as part of an Audit or examination of ACS-F or GCICC or as part of the normal production interface management function. Problems that impact the flow of usage between ACS-F and GCICC must be identified and jointly resolved as they occur. The resolution may include changes to control procedures, so similar problems would be avoided in the future. Any changes to control procedures would need to be mutually agreed upon by GCICC and ACS-F.

4.8 Software Changes

4.8.1 When ACS-F or GCICC plans to introduce any software changes which impact the format, content, schedule, or structure of exchanged usage data the other party shall be notified no less than thirty (30) calendar days before such changes are implemented. For major changes, the other party shall be notified no less than three (3) calendar months before such change is implemented. If GCICC believes that a particular change will have a material and adverse impact on its ability to exercise its rights under this agreement GCICC may invoke the Dispute Resolution process described in Section 23 of Part A of this agreement. ACS-F will not proceed with the change until the ADR has completed.

4.8.2 ACS-F and GCICC shall communicate the projected changes to the data exchange contact so that potential impacts on processing can be determined.

4.9 The parties shall review the impact of the change on the entire control structure. The parties shall negotiate any perceived problems and shall arrange to have the data tested utilizing the modified software if required.

4.10 GCICC Requested Changes

GCICC may submit a purchase order to negotiate and pay for initial direct and future maintenance costs, if any, associated with changes in the content and format of the usage data transmitted by ACS-F.

4.11 When the negotiated changes are to be implemented, GCICC and/or ACS-F shall arrange for testing of the modified data.

4.12 Information Exchange and Interfaces

4.12.1 Rejected Recorded Usage Data

Upon agreement between the parties that messages sent to GCICC contain invalid data, rendering the message incapable of being billed, the messages may be returned to ACS-F in their original EMR/EMI format. Standard EMR/EMI return codes shall be utilized. ACS-F may correct the message and submit it to GCICC provided that the time period associated with Lost Data has not lapsed.

PART C – ATTACHMENT IX

REPORTING STANDARDS NOT COVERED BY PART C, ATTACHMENT X

	DESCRIPTION	STANDARD	REMEDY
	Pre-Ordering/ Ordering/ Provisioning		
1	Electronic OSS Availability (OSS01-OSS09)	**a.** Will be available as published by ACS-F OSS Interface Operational Hours Schedule. Available hours will be at least equal to the published availability of underlying operational support systems for internal ACS-F use. Within the published hours of availability, the interfaces will be accessible and operational a minimum of 99% per month, measured collectively, with the following exceptions: **i.** Unscheduled downtime as a result of an outage of underlying systems, which also deny access to in internal ACS-F users will be excluded from the availability calculation. **ii.** Unscheduled outages due to defects or failures of hardware, data networks, systems software, vendor packaged software, custom-developed software or any other situation beyond the direct control of ACS-F. **b.** ACS-F shall provide GCICC electronic OSS dispatch and execution with the same priority as internal operations.	The remedy proposed as follows: 1. One 30 day period, (measured by calendar month) within twelve 30 day periods (measured as a calendar year) of not meeting a standard or standards results in no penalty. 2. The next or second occasion of not meeting a standard, within a twelve month span, after the first occasion, results in the requirement for ACS to define to GCICC the change(s) in practice or process that will allow ACS to return to and maintain the standard as set in this contract. 3. In the Event of a third occasion, of not meeting the standard within the 12 month span the parties shall be required to report all instances where the same performance standard has been violated within the twelve-month period to the Commission. The report shall include details about the first two violations and their

	DESCRIPTION	STANDARD	REMEDY
			consequences.
2	Electronic Order Entry directly into ACS-F's ordering and provisioning systems	**a.** Will be available 6/30/01 ACS-F has committed to delivering an electronic ordering interface if GCICC is willing to fund development. **b.** Will be available as published by ACS-F OSS Interface Operational Hours Schedule. Available hours will be at least equal to the published availability of underlying operational support systems for internal ACS-F use. Within the published hours of availability, the interfaces will be accessible and operational a minimum of 99% per month, measured collectively, with the following exceptions: **i.** Unscheduled downtime as a result of an outage of underlying systems, which also deny access to in internal ACS-F users will be excluded from the availability calculation. **ii.** Unscheduled outages due to defects or failures of hardware, data networks, systems software, vendor packaged software, custom-developed software or any other situation beyond the direct control of ACS-F.	See remedy under #1.
3	Installation Requirements Field/non-field Orders	**a.** 98% of all field orders will result in a completion call to GCICC from the field site at time of order completion.	See remedy under #1.
4	Order Completion Information	**a.** 98% of all field orders will be closed to GCICC within 4 hours of field work.	See remedy under #1.

	DESCRIPTION	STANDARD	REMEDY
		b. 99% of conversion orders, (jumper swing, no field work) will be closed to GCICC within one hour of the conversion orders' assigned time of day **c.** 99% of Evening conversions will be completed at the assigned time of day and a completion call will be placed to GCICC within 5 minutes of the completion activity. **d.** 95% all cut through orders will be completed to GCICC within one hour of actual cut through activity.	

	DESCRIPTION	STANDARD	REMEDY
	Interconnection Trunking, Private Lines, DSL Qualified Loops		
5	DSL Loop Studies (EML's)	**a.** 95% of DSL qualified Loop studies shall be completed within 5 days of request submittal. **b.** The remainder within 15 days	See remedy under #1.
6	DSL Installation Requirements	**a.** 98% of all field orders will be closed to GCICC within 4 hours of field work. **b.** 95% all cut through orders will be completed to GCICC within one hour of actual cut through activity.	See remedy under #1.

	DESCRIPTION	STANDARD	REMEDY
	Maintenance and Repair	**Measure**	
7	Reporting trouble within 5 days of the date installed	**a.** .5% or less of GCICC conversion, move or new install orders will result in a subscriber trouble call within 5 days of order completion (standard excludes CPE, GCICC or GCICC customer error caused troubles).	See remedy under #1.
8	Reporting trouble within 30 days of the date installed	**a.** No more than 2% if total GCICC customer related trouble tickets will be due to recurring troubles (standard excludes CPE, GCICC or GCICC customer error caused troubles).	See remedy under #1.
9	Percent of troubles reported vs. lines in service.	**a.** Percent of GCICC customer troubles is no more than 6% of GCICC lines in service (standard excludes CPE, GCICC or GCICC customer error caused troubles).	See remedy under #1.
10	Average clearing time - out of service – Residential	**a.** 95% cleared within 24 clock hours, except for those out of service calls received after 2:00pm on Friday. **b.** Remaining 5% of residential out of service troubles within 96 clock hours of the trouble report.	See remedy under #1.
11	Average clearing time - out of service – Business	**a.** 95% are cleared within 16 clock hours of report. **b.** The remaining are cleared within 32 hours of report.	See remedy under #1.
12	Average clearing time-out of service-DSL-Qualified Loops or special circuits	**a.** 90% will be cleared within 4 hour of the trouble report **b.** Remainder within 16 clock hours.	See remedy under #1.

	DESCRIPTION	STANDARD	REMEDY
13	Average clearing times-non out of service troubles	**a.** 95% cleared within 24 clock hours, except for those out of service calls received after 3:00pm on Friday. **b.** Remaining 5% of non-out of service troubles within 96 clock hours of the trouble report.	See remedy under #1.
14	Trouble resolution	**a.** 99% of all troubles will be cleared within 96 hours, and the remaining 1% will be cleared within 168 hours.	See remedy under #1.
15	Status Updates	**a.** 99% of GCICC open troubles tickets will be updated every 4 hours, 8:00am – Midnight.	See remedy under #1.
16	Buried Drops	**a.** Drops laid on ground before October 1 will be buried in that calendar year, weather permitting.	See remedy under #1.

	DESCRIPTION	STANDARD	REMEDY
	Billing	**Measure**	
17	Notice of format change	**a.** A minimum of 60 days notice will be provided to GCICC prior to any bill format changes being implemented.	See remedy under 1.
18	Electronic Billing	**a.** Invoice data will be transmitted electronically, be capable of sorting and manipulation electronically, and contain the following data: **1.** Account number **2.** Telephone numbers **3.** Offer codes by **a.** telephone and/or **b.** circuit number **4.** Service address, by **a.** telephone and/or **b.** circuit number	See remedy under 1.
19	Billing timeliness	**a.** Corrections in billing will be invoiced on the subsequent bill.	See remedy under 1.

PART C – ATTACHMENT X

PROCESSING AND PROVISIONING INTERVAL METRICS

This Processing and Provisioning Interval Metrics Agreement (hereinafter the "Performance Agreement" or "Attachment X") is between the parties named in that certain Settlement Agreement dated March 5, 2004 (the "Settlement Agreement") to which this Performance Agreement is made part of as Exhibit A.

1. Definitions

Terms not otherwise defined in this Attachment X shall have the meaning ascribed to them in the Settlement Agreement. Terms not otherwise defined in this Attachment X or the Settlement Agreement shall have the meaning ascribed to them in the applicable interconnection agreement between GCI and ACS in effect during the term of the Settlement Agreement. For the purposes of this Attachment X, "GCI" shall have the same meaning as "GCICC", and "ACS" shall have the same meaning as "ACS-F."

Baseline – The volume of Simple Orders necessary to the calculation of the metrics for processing and provisioning Simple Orders. The initial Baseline as of the Effective Date is 400 Simple Orders per day.

Baseline Adjustment – The calculation used to determine an adjustment to the Baseline. The calculation components to adjust Baseline are as follows: sum of the last 6 months of Simple Orders divided by the number of total business days in that same six (6) month period (simple average number of orders daily) and multiply by 133%. The calculation and corresponding adjustments to the Baseline will occur every three (3) months for the ensuing three (3)month period. The first adjustment will be made June 1, 2004.

Days – Refers to business days and excludes weekends and ACS holidays (non-business days). Processing and provisioning days are counted pursuant to Section 2.

Due Date – The date identified in an ACS firm order confirmation ("FOC") as the date scheduled for work completion. For the purpose of applying the Missed Due Date Recurring Cost Credit, an order will be deemed completed on the Due Date only if completed by 3:00 PM.

Complex Order – An order requesting installation, move, change, or disconnect of a Special Circuit; TSR Centrex; TSR Direct Inward Dial ("DID"); TSR Digital Subscriber Services (DSS); and TSR Primary Rate Interface ("PRI") services pursuant to local interconnection.

Metric – The benchmarks established by the parties and set forth in Sections 3.A. and 3.B., pursuant to which ACS' performance of Processing Intervals and Provisioning Intervals for Orders will be measured.

Non-Electronic Orders – Orders that are entered into the ACS OSS systems by ACS personnel.

Processing Interval – The number of days, as measured pursuant to Section 2, from the day a GCI Order is received by ACS to the day ACS returns the FOC, or rejection, for such Order.

Provisioning Interval – The number of days, as measured pursuant to Section 2, from the day ACS returns the FOC for a GCI Order to the Work Completion Date for such Order.

Simple Order – An order for services or facilities involving GCI residential or business customers, except as defined in Complex Orders or Special Complex Orders.

Simple Order Provisioning Categories – (1) Orders Requiring a Field Visit ("Field"), (2) Orders Requiring Central Office Work ("C/O"), (3) Orders Completed by the Business or Customer Service Representative ("BSR/CSR"), and (4) Billing Records only Orders ("Billing Change").

Special Complex Order – An order requesting installation, move, change, or disconnect of digital subscriber line ('DSL"), ordered as an unbundled network element.

TSR – Total Service Resale a/k/a wholesale rates charged by ACS pursuant to local interconnection agreements.

Work Completion Date –The date ACS completes Billing Change, BSR/CSR, C/O, or Field provisioning, as applicable, for Simple, Complex, or Special Complex Order fulfillment.

2. Counting Days

A. Counting Processing Days

Table (1) demonstrates the method of counting processing days for purposes of this Performance Agreement. Though the Processing Interval Metrics are different for Simple, Complex, and Special Complex Orders, the method of counting processing days is the same. GCI will receive notice of ACS' receipt of Orders via automatic electronic confirmation, or other mutually agreeable means as needed. In the event that GCI does not receive confirmation, GCI will notify ACS. In addition, when GCI submits more than one order in a given transmittal, GCI will provide ACS the total number of orders included with that transmittal.

For Orders received by ACS on or before 11:59 pm on any business day, day zero (0) is that business day.

For Orders received by ACS on or before 11:59 pm on any non-business day, day zero (0) is the next business day.

TABLE 1 Scenarios of Orders received on a business and non-business day

Order Received on or before 11:59 pm	FOC or Rejection Returned at Any Time on such Day	Processing Day Count
Monday	FOC returned Monday	0 days
	FOC returned Tuesday	1 day
	FOC returned Wednesday	2 days
Thursday	FOC returned Thursday	0 days
	FOC returned Friday	1 day
	FOC returned Monday	2 days
Saturday	FOC returned Monday	0 days
	FOC returned Tuesday	1 day
	FOC returned Wednesday	2 days

B. Counting Provisioning Days

For purposes of this Performance Agreement, the day ACS returns the FOC for a given Order is day zero (0) for purposes of counting provisioning days. Otherwise, days are counted in the same fashion for provisioning as they are for processing (i.e., non-business days are not counted).

C. Exceptions

Notwithstanding anything to the contrary set forth in this Performance Agreement, a day will not be counted if an ACS electronic system necessary for processing or provisioning Orders is unavailable for use for processing or provisioning both GCI and ACS Orders for four (4) or more hours on such day.

3. Processing and Provisioning Metrics

Subject to the exceptions set forth in Section 3.C., the Processing Interval Metrics and Provisioning Interval Metrics described in this Section 3 for Simple Orders will go into effect on the day following the date both parties execute the Settlement Agreement (the "Effective Date"); the Processing Interval Metric for Complex and Special Complex Orders will go into effect on

the Effective Date, and the Provisioning Interval Metric for Complex and Special Complex Orders will go into effect thirty (30) calendar days after the Effective Date.

A. Processing Interval Metrics for Non-Electronic Orders[3]

Simple Orders – The Processing Interval Metric for Simple Orders received on a given day that fall on or below the Baseline then in effect is two (2) days.

> The Processing Interval Metric for those Simple Orders received on a given day that exceeds the Baseline then in effect, up to and including 150% of the Baseline, is three (3) days.[4]
>
> The Processing Interval Metric for those Simple Orders received on a given day that exceed 150% of Baseline then in effect, is five (5) days.[5]

Complex Orders – The Processing Interval Metric for all Complex Orders is no more than six (6) days.

Special Complex Orders – The Processing Interval Metric for all Special Complex Orders is no more than six (6) days.

B. Provisioning Interval Metrics

Simple Orders – The Provisioning Interval Metrics for Simple Orders received on a given day are defined in Table 2. The Provisioning Interval Metrics for Simple Orders are established based upon the Simple Provisioning Category applicable to such Order. A Simple Order that involves multiple Simple Provisioning Categories will be categorized in the Simple Provisioning Category with the longest Provisioning Interval Metric. Provisioning Interval Metrics are not cumulative.

[3] The processing interval for any Order that is processed via Electronic Operations Support Systems shall be the same as or better than those provided herein.

[4] Excludes conversion/transfer orders pursuant to 3 AAC 53.290(g).

[5] Excludes conversion/transfer orders pursuant to 3 AAC 53.290(g).

Table 2: Simple Orders

ACS Provisioning Category	Provisioning Order Type	Provisioning Metric for Orders within and including Baseline[6]	Provisioning Metric only for those Orders Exceeding Baseline
Billing Change	Any Account Records Change	Parity or 1 day, whichever is less	N/A
BSR/CSR	Wholesale/UNE-P Installation or Move not requiring a field visit with line equipment in place	Parity or 2 days, whichever is less	N/A
BSR/CSR	Conversion Wholesale / UNE-P	Parity or 2 days, whichever is less	N/A
BSR/CSR	Provisioning Change Wholesale to/from UNE-P	Parity or 2 days, whichever is less	N/A
BSR/CSR	Disconnect Wholesale or UNE-P	Parity or 2 days, whichever is less	N/A
BSR/CSR	Restoral/Reconnect from Non-Pay	Parity or 2 days, whichever is less	N/A
BSR/CSR	Feature Change Wholesale or UNE-P	Parity or 2 days, whichever is less	N/A
C/O	Loop Installation or Move not requiring a field visit	Parity or 4 days, whichever is less	No more than 10 days
C/O	Wholesale/UNE-P Installation or Move not requiring a field visit without line equipment in place	Parity or 4 days, whichever is less	No more than 10 days
C/O	Conversion Loop	Parity or 4 days, whichever is less	No more than 10 days
C/O	Provisioning Change to/from LP	Parity or 4 days, whichever is less	No more than 10 days
C/O	Port Only (simple)	Parity or 4 days, whichever is less	No more than 10 days
C/O	Disconnect Loop	Parity or 4 days, whichever is less	No more than 10 days
Field	Installation or Move requiring a field visit - any provisioning type (All Business Installations and Move orders require a field visit)	Parity or 11 days, whichever is less	No more than 20 days

N/A = Not Applicable

Complex Orders – The Provisioning Interval Metric for Complex Orders received on any given day is 90% of the Complex Orders within 30 calendar days, 98% of the Complex Orders within 45 calendar days, and no more than 2% of the Complex Orders on a case-by-case basis, evaluated monthly.

Special Complex Orders – The Provisioning Interval Metric for Special Complex Orders is no more than fifteen (15) days.

[4] For the purpose of assessing compliance with the Provisioning Interval Metrics set forth in this Table 2, "parity" for any ACS Simple Order Provisioning Category in a given month will be measured according to the ACS Parity Report for that same month, as forth in Section 4.A. of this Exhibit A.

C. Exceptions to Application of Provisioning Metrics and Missed Due Date Recurring Cost Credit

Notwithstanding anything to the contrary contained in this Performance Agreement, the Provisioning Interval Metric shall not apply to any Simple, Complex, or Special Complex Order meeting at least one of the following criteria: (i) the customer address is not included in ACS' records; (ii) ACS access to the GCI customer premises is required to complete the Order and such access is denied or limited; (iii) involves faulty GCI plant; (iv) no facilities are available and the Order is designated as a held order, provided that, "held orders" shall not include any Order for which a Due Date has been assigned; or (vi) GCI has requested, and ACS has granted, a specific Due Date to occur outside the Provisioning Interval Metric. The applicable Provisioning Interval Metric will apply to Orders for which GCI requests, and ACS grants, a specific Due Date to occur within the applicable Provisioning Interval Metric. Nothing in this Section 3.C. is intended to affect the application of the Missed Due Date Recurring Cost Credit as set forth in Section 5.B to any Order, provided, however, that notwithstanding the foregoing, the Missed Due Date Recurring Cost Credit set forth in Section 5.B. shall not be applied to any Simple, Complex or Special Complex Order that meets any of the criteria set forth in (i), (ii) or (iii) above.

4. Metric Compliance Reports

ACS will provide the following reports to GCI demonstrating its metric performance results for processing and provisioning of GCI Simple, Complex, and Special Complex Orders. ACS will not dispute the veracity of the monthly performance reports it has provided GCI, provided that ACS has the right to update and/or correct any monthly report provided to GCI in the ordinary course of business; provided, however, that ACS must provide any updated and/or corrected report within thirty (30) business days of the date the report was originally sent to GCI ("30-day correction period"), or at any time thereafter with mutual consent of the parties, which consent will not be unreasonably withheld. GCI may expressly rely on the accuracy of such reports should it be necessary to utilize such performance results as a factual basis in any proceedings relating to either party's performance under this Performance Agreement.

A. Parity Reports

ACS will provide to GCI a monthly Parity Report. This report will compare the number of GCI Simple Orders provisioned and the average days within which those Orders were provisioned with the number of ACS Simple Orders provisioned and the average number of days within which those Orders were provisioned, in each of the Simple Provisioning Categories, by market (e.g., Anchorage, Fairbanks and Juneau) (to determine the average intervals). The first monthly Parity Report is due on the last day of the first month following the Effective Date, and will report data beginning with the Effective Date. Thereafter, the monthly Parity Report for a given month is due by the last day of the following month.

B. Processing Reports

Simple Orders:

Daily Operational Report. ACS will provide GCI with daily Simple Order processing reports containing the following information: (1) Total number of lines ordered by GCI broken down by markets; (2) Order types; (3) ACS receive date; (4) the total number of batches received by ACS; and (5) the status for lines pending FOC from previous days. ACS will provide a revised report when discrepancies are identified. Daily Processing Reports will commence on the Effective Date.

Monthly Performance Report. ACS will also provide GCI a monthly performance report that will list for each day of the month, the number of Simple Orders received on that day and how many of the Simple Orders fell within and outside the Processing Interval Metrics. The first monthly Simple Order performance report will be due on the last day of the first month following the Effective Date, and will report data beginning with the Effective Date. Thereafter, the monthly Simple Order performance report for a given month is due by the last day of the following month.

Complex and Special Complex Orders:

Daily Operational Report. ACS will provide GCI with daily processing reports for Complex and Special Complex Orders containing the following information: (1) Total Complex and Special Complex Orders received by ACS broken down by market; (2) Order type; (3) ACS receive date; and (4) status for Complex and Special Complex Orders pending FOC from previous days. ACS will provide a revised report when discrepancies are identified. Daily Processing Reports will commence sixty (60) calendar days from the Effective Date.

Monthly Performance Report. ACS will also provide GCI a monthly performance report that will list for each day of the month, the number of Complex and Special Complex Orders, respectively, received on that day and how many of the Complex and Special Complex Orders, respectively, fell within and outside the Processing Interval Metrics. The first monthly Complex and Special Complex performance report will be due on the last day of the third month following the Effective Date, and will report data beginning with the first daily operational report issued for Complex and Special Complex Orders. Thereafter, the monthly Complex and Special Complex performance report for a given month is due by the last day of the following month.

C. Provisioning Reports

Simple Orders:

Daily Operational Report. ACS will provide GCI with daily Simple Order provisioning reports. The reports will be provided daily or weekly based upon GCI's preference and will

contain the following information broken down by ACS Simple Order Provisioning Category: (1) telephone number/service instance; (2) all Simple Orders completed within a given timeframe; (3) receive date; (4) create date; (5) Due Date; (6) Work Completion Date; and (7) the duration between the create date and the Work Completion Date. Daily Provisioning Reports will commence thirty (30) days after the Effective Date.

Monthly Provisioning Report. ACS will also provide GCI a monthly provisioning report that will list for each day of the month the number of Simple Orders received on that day and how many of those Orders fell within and outside the Provisioning Interval Metrics. The first monthly Simple Order provisioning report will be due by the last day of the first month following the Effective Date, and will report data beginning with the Effective Date. Thereafter, the monthly Simple Order provisioning report for a given month is due by the last day of the following month.

Complex and Special Complex Orders:

ACS will provide GCI a monthly provisioning report that will list separately for the reporting month and the preceding month, the number of Complex and Special Complex Orders, respectively, received for the month and how many of the Complex and Special Complex Orders, respectively, fell within and outside the applicable Provisioning Interval Metrics. The first monthly Complex and Special Complex provisioning report will be due on the last day of the third month following the Effective Date, and will report data beginning with the date the Provisioning Interval Metric for Complex and Special Complex Orders went into effect in accordance with Section 3. Thereafter, the monthly Complex and Special Complex provisioning report for a given month is due by the last day of the following month.

5. Recurring Cost Credit

A. Processing and Provisioning Recurring Cost Credit

If a Processing Interval Metric for any Simple, Complex, or Special Complex Order is missed, ACS will allow and GCI will accept, on a per Order basis, one month's service at no recurring charge for the missed ordered service. If a Provisioning Interval Metric for any Simple, Complex, or Special Complex Order is missed, ACS will allow and GCI will accept, on a per Order basis, one month's service at no recurring charge for the missed ordered service (or two months if the Processing Interval Metric is also missed for the Order).

B. Missed Due Date Recurring Cost Credit

In addition to the credits set forth in Section 5.A., if ACS misses a Due Date for any Simple, Complex, or Special Complex Order (meaning that the Work Completion Date and the Due Date are not the same day), ACS will allow and GCI will accept, on a per Order basis, one month's

service at no recurring charge for the missed ordered service. Simple, Complex and Special Complex Orders that are the subject of a missed Due Date will be given priority processing to reschedule the Order. Notwithstanding the foregoing, the Missed Due Date Recurring Cost Credit shall not apply to a given Order if: (1) ACS provides notice to GCI no later than noon of the day preceding the Due Date that such Due Date will be missed; and (2) ACS establishes and meets the new Due Date within the applicable Provisioning Interval Metric for that Order.

C. Issuance of Recurring Cost Credits

ACS will issue GCI Processing and Provisioning Recurring Cost Credits and Missed Due Date Recurring Cost Credits once each month as a credit on the monthly Interconnection statement. Credits accrued for a given month will be applied to the second bill issued subsequent to the month in which the metric compliance report, in which the non-compliant event was reported, was issued. In the event that a credit adjustment is required pursuant to a report update and/or correction implemented outside of the 30-day correction period in accordance with the terms of Section 4, such adjustment will be applied to the next monthly Interconnection statement issued after the updated and or corrected report is issued to GCI. ACS will, on a per line basis, summarize the issued recurring cost credits on an attachment to the monthly Interconnection statement.

6. Dispute Resolution

A. Remedies for Breach of Attachment X

The parties agree that breach of the provisions of this Attachment X by one party will leave the other party with no adequate remedy at law. Notwithstanding any provision of the Settlement Agreement or any applicable interconnection agreement between the parties, pursuit of one or more remedies to which an injured party may be entitled at law or equity for breach or threatened breach by the other party of any provision of this Attachment X shall not bar pursuit of any other remedy for the purpose of enforcing the provisions of Attachment X.

B. Negotiation and Escalation of Disputes

Notwithstanding the rights and remedies set forth in Section 6.A. above, the Parties agree to attempt to resolve any dispute between the Parties arising out of, relating to, or in connection with this Attachment X, or the breach, termination or validity thereof (collective, a "Dispute"), prior to pursuing any available remedy at law or equity, in accordance with the following dispute resolution procedures.

(i) The party raising a Dispute shall deliver a written notice of Dispute to the other party's operational manager responsible for performance of this Agreement, setting out with specificity the matter(s) in Dispute. Within five (5) business days after receipt of a notice of dispute, the receiving party shall respond in writing. The operations managers for each party responsible for performance of this Agreement shall attempt in good faith to resolve the Dispute for a period of

fifteen (15) calendar days from the date of the notice of dispute. If the Dispute is not resolved, as reflected by a written agreement between the parties, within such fifteen (15) day period, the Dispute shall be escalated upon written notice of escalation to an executive representative of each party.

(ii) Upon receipt of a notice of escalation by either party, an executive representative of each party (vice president or other executive with a similar or higher level of authority) shall attempt in good faith to resolve the Dispute for a period of thirty (30) calendar days. If the Dispute is not resolved, as reflected by a written agreement between the parties, within such thirty (30) day period, either party may pursue any available remedy as set forth in Section 6.A. with respect to such Dispute.

C. Application Only to Attachment X

Notwithstanding anything to the contrary set forth in this Section 6, this Attachment X or the Settlement Agreement, the parties acknowledge and agree that nothing in this Section 6, this Attachment X or the Settlement Agreement shall be deemed to terminate, amend or otherwise modify any dispute resolution procedure contained in any interconnection agreement now or in the future for matters unrelated to Order processing and provisioning interval metrics, recurring cost credits and the related reporting requirements set forth in this Attachment X. Further, this Section 6 shall not apply to any breach or dispute relating to the matters set forth in the Settlement Agreement, which disputes shall be resolved in accordance with the terms of the Settlement Agreement. Likewise, the parties agree that, subject to Section 6.B. above, nothing in this Attachment X, the Settlement Agreement, or any interconnection agreement shall be deemed to waive, limit, or affect any remedy available at law or equity to enforce the provisions of this Attachment X.

NECA Direct Case

WC Docket No. 04-372

Exhibit 5B

STATE OF ALASKA

DEPARTMENT OF COMMUNITY AND ECONOMIC DEVELOPMENT
REGULATORY COMMISSION OF ALASKA

FRANK H. MURKOWSKI, GOVERNOR

701 WEST EIGHTH AVENUE, SUITE 300
ANCHORAGE, ALASKA 99501-3469
PHONE: (907) 276-6222
FAX: (907) 276-0160
TTY: (907) 276-4533
WEBSITE: www.state.ak.us/rca/

September 8, 2004

In reply refer to: Tariff Section
File: U-03-064

Ted Moninski
Director, Regulatory Affairs
ACS of Alaska, Inc.
600 Telephone Avenue, MS 60
Anchorage, Alaska 99503

Dear Mr. Moninski:

Pursuant to Order No. 5 in Docket U-03-64, enclosed is a validated copy of the Interconnection Agreement between ACS of Alaska, Inc. and GCI Communication Corp., filed on May 18, 2004. The effective date of the Agreement is August 16, 2004. A copy of the validated Agreement has also been sent to GCI Communication Corp.

Please note that a reference to Order No. U-03-64(5) and the effective date have been added to each page of the Agreement.

Sincerely,

REGULATORY COMMISSION OF ALASKA

Juliana Wayman

Juliana Wayman
Chief, Tariff Section

Enclosure

ORIGINAL

U-03-003
U-03-004
U-03-005

R.C.A.
RECEIVED
04 MAY 18 PM 3:43

AMENDED AND RESTATED INTERCONNECTION AND RESALE AGREEMENT

Between

ACS OF ALASKA, INC.

And

GCI COMMUNICATION CORP.

Pursuant to: U-03-63(5)
U-03-64(5)

Effective: August 16, 2004

MAY 7 6 2004

Table of Contents

PART A – General Terms and Conditions 1

PART B – Definitions 18

PART C – Attachment I – Price Schedule 21

PART C – Attachment II – Local Resale 27

PART C – Attachment III – Network Elements 28

PART C – Attachment IV – General Interconnection and Operational Requirements 45

PART C – Attachment V – Collocation 78

PART C – Attachment VI – Rights of Way ("ROW'), Conduits, Pole Attachments 103

PART C – Attachment VII – Local Number Portability 113

PART C – Attachment VIII – General Business Requirements 114

PART C – Attachment IX – Reporting Standards 117

PART C – Attachment X – Processing and Provisioning Interval Metrics 124

MAY 1 6 2004

AMENDED AND RESTATED INTERCONNECTION AND RESALE AGREEMENT

This Interconnection and Resale Agreement (the "Agreement"), entered into this 18th day of May, 2004, by and between GCI Communication Corp. ("GCICC"), an Alaska Corporation, and ACS of Alaska, Inc. ("ACS-AK"), a corporation organized and existing under the laws of the State of Alaska, to establish the rates, terms and conditions for local interconnection, local resale, and purchase of unbundled network elements (individually referred to as the "service" or collectively as the "services").

WHEREAS, the Parties wish to interconnect their local exchange networks in a technically and economically efficient manner for the transmission and termination of calls, so that customers of each can seamlessly receive calls that originate on the other's network and place calls that terminate on the other's network, and for GCICC's use in the provision of exchange access ("Local Interconnection"); and

WHEREAS, GCICC wishes to purchase Telecommunications Services for resale to others, and ACS-AK is willing to provide such service; and

WHEREAS, GCICC wishes to purchase unbundled network elements, services and functions ("Network Elements"), and to use such services for itself or for the provision of its Telecommunications Services to others, and ACS-AK is willing to provide such services; and

WHEREAS, GCICC wishes to purchase some ancillary services and functions and additional features, which are specifically included in this Agreement, and to use such services for itself or for the provision of its Telecommunications Services to others, and ACS-AK is willing to provide such services; and

WHEREAS, the Parties intend this Agreement to comply with the Communications Act of 1934, as amended by the Telecommunications Act of 1996 (the "Act"), the Rules and Regulations of the Federal Communications Commission ("FCC"), and the orders, rules and regulations of the Regulatory Commission of Alaska (the "Commission");

Now, therefore, in consideration of the terms and conditions contained herein, GCICC and ACS-AK hereby mutually agree as follows:

PART A – GENERAL TERMS AND CONDITIONS

MAY 2 2004

Section 1 Scope of this Agreement

1.1 This Agreement, including Parts A, B, and C, specifies the rights and obligations of each party with respect to the establishment, purchase, and sale of Local Interconnection, resale of Telecommunications Services and Unbundled Network Elements. This PART A sets forth the general terms and conditions governing this Agreement. Terms used but not defined herein will have the meanings ascribed to them in the Telecommunications Act of 1996 ("Act"), in the FCC's, and in the Regulatory Commission of Alaska's ("Commission") Rules and Regulations as of the Approval Date of this Agreement. PART C sets forth, among other things, descriptions of the services, pricing, technical and business requirements, and physical and network security requirements.

LIST OF ATTACHMENTS COMPRISING PART C:

I. Price Schedule
II. Local Resale
III. Network Elements
IV. Interconnection
V. Collocation
VI. Rights of Way
VII. Number Portability
VIII. General Business Requirements
IX. Reporting Standards
X. Processing and Provisioning Interval Metrics

1.2 ACS-AK shall provide notice of network changes and upgrades in accordance with Sections 51.325 through 51.335 of Title 47 of the Code of Federal Regulations.

Section 2 Regulatory Approvals

2.1 This Agreement, and any amendment, modification, or material clarification hereof, will be submitted to the Commission for approval in accordance with Section 252 of the Act. In the event that the Commission or any court or regulatory agency of competent jurisdiction rejects any provision of this Agreement, the Parties shall negotiate promptly and in good faith revisions as may reasonably be required to achieve approval of the Agreement.

2.2 Any performance or duty in this Agreement which anticipates or is dependent on the development and implementation of any additional electronic interface capabilities is contingent on the final terms for such an interface, including allocation of costs and scheduling, to be negotiated by the parties, or in the event the parties cannot agree, as presented for arbitration, as directed by the Commission in Order U-99-141/142/143(9), dated August 24, 2000.

2.3 In the event that a regulatory agency or court of competent jurisdiction (a) finds that the terms of this Agreement are inconsistent in one or more material respects with applicable federal or state law or any applicable rules, regulations, or orders, or (b) alters or preempts the effect of this Agreement, then, once such decision is final and no longer subject to administrative or judicial review, the Parties immediately shall commence good faith negotiations to conform this Agreement to the terms of such decision or to the terms of the subject federal or state law or applicable rules, regulations, or orders.

Section 3 Term and Termination

3.1 This agreement shall be deemed effective upon the Approval Date. No order or request for services under this Agreement shall be processed, with the exception of noncommercial testing, until this Agreement is so approved unless otherwise agreed to, in writing by the parties or as may be allowed by Commission order.

3.2 The term of this Agreement shall commence as of the Approval Date, and the Agreement shall remain in effect until midnight on January 1, 2008. The parties may, by written agreement, elect to extend its term for a year. The parties may thereafter, by written agreement prior to the end of the additional or any subsequent one year term, elect to further extend the term of the agreement for an additional one year term or terms. Notwithstanding the foregoing, the Parties agree that the terms of Part C, Attachment X remain in effect until March 5, 2009, unless changed by written agreement of the Parties.

3.3 At the end of the 26th month from approval, or ten months prior to the end of any subsequent one year term upon which the parties may have agreed, the parties agree that they shall immediately commence a good faith negotiation pursuant to the Telecommunications Act of 1996, and any applicable regulations, rules, or orders of this Commission, to secure a new agreement. It is the express intention of the parties that such an agreement shall be negotiated by, or arbitrated between the parties and approved by this Commission within ten months thereafter as provided by law. The parties agree to exercise their best efforts and all necessary diligence to secure approval of a new agreement by the end of ten months. The parties further agree that services under this agreement shall continue to be provided, without interruption and subject to all terms and conditions of this agreement, throughout the ten month negotiation, arbitration and approval period, unless a new agreement should be approved sooner.

3.4 Should a new agreement nevertheless not be approved within the ten month period provided for under the Act, and by this agreement, the parties agree as follows: Services under this agreement shall continue to be provided without interruption for an additional six months, subject to all terms and conditions of this agreement, except as they may be modified by an applicable interim order as provided herein. During this period either party may apply to this Commission, the FCC, or any court of competent jurisdiction, as may be appropriate, for interim relief on an expedited basis in the form of an order extending or modifying the terms of this agreement, pending approval of a new agreement.

Section 4 Charges and Payment

4.1 In consideration of the services and network elements provided by ACS-AK under this Agreement, GCICC shall pay the charges set forth in Attachment I.

4.2 In consideration of the network elements provided by GCICC under this Agreement, ACS-AK shall pay the charges set forth in Attachment I.

Section 5 Audits and Examinations

5.1 As used herein "Audit" shall mean a comprehensive review of services performed under this Agreement. Either party may perform audits no more frequently than one (1) in each twelve (12) month period.

5.2 Upon sixty (60) days written notice by the requesting party to the other, the requesting party shall have the right through its authorized representative to make an Audit. Such Audit shall take place during normal business hours, of records, accounts, and processes which contain information bearing upon the provision of the services provided and performance standards under this Agreement. Within the above-described period, the Parties shall reasonably agree upon the scope of the Audit, the documents and processes to be reviewed, and the time, place and manner in which the Audit shall be performed. Responding party agrees to provide Audit support, including appropriate access to and use of facilities (e.g., conference rooms, telephones, copying machines).

5.3 As used herein, "Examination" shall mean a discrete inquiry into a specific element of, or process related to, services performed under this Agreement. The Examination will consist of an investigation into any specific complaint, discrepancy, or concern in service which either party may bring to the other's attention. The responding party agrees, in good faith, to provide information or documents sufficient to address or explain the complaint or discrepancy, and to provide the requesting party a reasonable opportunity to monitor provision of the service at issue.

5.4 Each party shall bear its own expenses in connection with the conduct of the Audit or Examination. The reasonable cost of special data extraction required to conduct the Audit or Examination will be paid for by the requesting party. For purposes of this Section 5.4, a "Special Data Extraction" shall mean the creation of an output record or informational report (from existing data files) that is not created in the normal course of business. If any program is developed to the requesting party's specifications and at that party's expense, the requesting party shall specify at the time of request whether the program is to be retained by the responding party for reuse for any subsequent Audit or Examination.

5.5 Neither such right to examine and audit nor the right to receive an adjustment shall be affected by any statement to the contrary appearing on checks or otherwise, unless such statement expressly waiving such right appears in writing, is signed by the

authorized representative of the party having such right and is delivered to the other party in a manner sanctioned by this Agreement.

5.6 This Section 5 shall survive expiration or termination of this Agreement for a period of two (2) years after expiration or termination of this Agreement.

Section 6 Network Element Bona Fide Request Process for Further Unbundling

6.1 Based upon the consideration of the scope of the Network elements, Services and Local Interconnection provided by ACS-AK under this Agreement, ACS-AK shall promptly consider and analyze access to categories of unbundled Network Elements not covered in this Agreement with the submission of a Network Element Bona Fide Request by GCICC hereunder. The Network Element Bona Fide Request process set forth herein is intended solely to address provision of interconnection, elements and services not currently available from ACS-AK or not currently required by applicable law.

6.2 A Network Element Bona Fide Request shall be submitted in writing and shall include a technical description of each requested Network Element. The parties will meet to discuss such request and to clarify any questions regarding its scope.

6.3 GCICC may cancel a Network Element Bona Fide Request at any time, but shall pay ACS-AK actual, reasonable, and verifiable costs of processing and/or implementing the Network Element Bona Fide Request up to the date of cancellation.

6.4 Within forty-five (45) days of its receipt of a Network Bona Fide Request, ACS-AK shall deliver to GCICC a preliminary analysis of such Network Element Bona Fide Request. The preliminary analysis shall confirm that ACS-AK will offer access to the Network Element or will provide a detailed explanation of why it will not offer such access.

6.5 Upon receipt of the preliminary analysis, GCICC shall, within thirty (30) days, notify ACS-AK of its intent to proceed or not to proceed.

6.6 ACS-AK shall promptly proceed with the Network Element Bona Fide Request upon receipt of written authorization from GCICC. When it receives such authorization, ACS-AK shall promptly develop the requested services, determine their availability, calculate the applicable prices and establish installation intervals.

6.7 As soon as feasible, but not more than sixty (60) days after its receipt of authorization to proceed with developing the Network Element Bona Fide Request, ACS-AK shall provide to GCICC a Network Element Bona Fide Request quote which will include, at a minimum, a description of each Network Element, the availability, the applicable rates and the installation intervals.

6.8 Within thirty (30) days of its receipt of the Network Element Bona Fide Request quote, GCICC must either confirm its order for the Network Bona Fide Request pursuant

to the Network Element Bona Fide Request quote or seek arbitration by the Commission pursuant to Section 252 of the Act.

Section 7 Intellectual Property Rights

Any intellectual property which originates from or is developed by a Party shall remain in the exclusive ownership of that Party. Except for a limited license to use patents or copyrights to the extent set forth in this Agreement and necessary for the Parties to use any facilities or equipment (including software), or to receive any service solely as provided under this Agreement, no license in patent, copyright, trademark or trade secret, or other proprietary or intellectual property right now or hereafter owned, controlled or licensable by a Party, is granted to the other party or shall be implied or arise by estoppel. To the extent not precluded by law or agreement with third parties, and when available, each party shall, in good faith, use its best efforts and assist in seeking to obtain any licenses or sublicenses in relation to the intellectual property used in its network that may be required to enable the other party to receive services as provided within this agreement. Any costs, fees, or expenses associated with obtaining and use of the license is to be borne by the party receiving the service.

Section 8 Limitation of Liability

Neither Party shall be responsible to the other for any indirect, special, consequential or punitive damages, including (without limitation) damages for loss of anticipated profits or revenue or other economic loss in connection with or arising from anything said, omitted, or done hereunder (collectively "Consequential Damages"), whether arising in contract or tort, provided that the foregoing shall not limit a Party's obligation under Section 9 to indemnify, defend, and hold the other party harmless against amounts payable to third parties.

Section 9 Indemnification

9.1 To the extent not prohibited by law, each Party shall, and hereby agrees to, defend at the other's request, indemnify and hold harmless the other Party and each of its officers, directors, employees and agents (each, an "Indemnitee") against and in respect of any loss, debt, liability, damage, obligation, claim, demand, judgment or settlement or any nature or kind, known or unknown, liquidated or unliquidated, including without limitation all reasonable costs and expenses incurred (legal, accounting or otherwise) (collectively, "Damages") arising out of, resulting from or based upon any pending or threatened claim, action, proceeding or suit by any third party (a "Claim"): (i) based upon injuries or damage or death to any person or property or the environment arising out of or in connection with this Agreement including but not limited to collocation; that are the result of or arising out of such Indemnifying Party's actions or omissions, including negligence or willful acts, breach of Applicable Law, or breach of representations or covenants made in this Agreement, or the actions, breach of Applicable Law or of this Agreement by its officers, directors, employees, agents and subcontractors, or (ii) for actual or alleged infringement of any patent, copyright, trademark, service mark, trade

name, trade dress, trade secret or any other intellectual property right now known or later developed (referred to as "Intellectual Property Rights") to the extent that such claim or action arises from the Indemnifying Party's or the Indemnifying Party's Customer's use of the Network Elements, Ancillary Functions, Combinations, Local Services or other services provided under this Agreement.

9.2 The indemnifying Party under this Section agrees to defend any suit brought against the other Party either individually or jointly with the indemnified Party for any such loss, injury, liability, claim or demand. The indemnified Party agrees to notify the other Party promptly, in writing, of any written claims, lawsuits, or demands for which it is claimed that the indemnifying Party is responsible under this Section and to cooperate in every reasonable way to facilitate defense or settlement of claims. The indemnifying Party shall have complete control over defense of the case and over the terms of any proposed settlement or compromise thereof. The indemnifying Party shall not be liable under this Section for settlement by the indemnified Party of any claim, lawsuit, or demand, if the indemnifying Party has not approved the settlement in advance, unless the indemnifying Party has had the defense of the claim, lawsuit, or demand tendered to it in writing and has failed to assume such defense. In the event of such failure to assume defense, the indemnifying Party shall be liable for any reasonable settlement made by the indemnified Party without approval of the indemnifying Party.

9.3 Each Party agrees to indemnify and hold harmless the other Party from all claims and damages arising from the Indemnifying Party's discontinuance of service to one of the Indemnifying Party's subscribers for nonpayment.

9.4 When the lines or services of other companies and Carriers are used in establishing connections to and/or from points not reached by a Party's lines, neither Party shall be liable for any act or omission of the other companies or Carriers. In addition to its indemnity obligations hereunder, each Party shall, to the extent allowed by law or Commission Order, provide, in its tariffs and contracts with its subscribers that relate to any Telecommunications Services or Network Element provided or contemplated under this Agreement, that in no case shall such Party or any of its agents, contractors or others retained by such Party be liable to any subscriber or third party for (i) any loss relating to or arising out of this Agreement, whether in contract or tort, that exceeds the amount such Party would have charged the applicable subscriber for the service(s) or function(s) that gave rise to such loss.

Section 10 Remedies

10.1 In addition to any other rights or remedies, to the extent permitted by applicable law, and unless specifically provided here and to the contrary, either Party may sue in equity for specific performance.

10.2 Except as otherwise provided herein, all rights of termination, cancellation or other remedies prescribed in this Agreement, or otherwise available, are cumulative and are not intended to be exclusive of other remedies to which the injured Party may be

entitled at law or equity in case of any breach or threatened breach by the other Party of any provision of this Agreement, and use of one or more remedies shall not bar use of any other remedy for the purpose of enforcing the provisions of this Agreement.

Section 11 Insurance

11.1 GCICC shall, at its expense, obtain and keep in force during the term of this agreement, the following types and minimum limits of insurance:

Commercial General Liability	$10 Million per combined single limit applying occurrence to bodily injury and property damage.
Worker's Compensation Insurance	Statutory
Employers' Liability	$500,000
Automotive Liability	$1 Million per occurrence

11.2 Required limits may be satisfied through primary and umbrella or excess policies; all insurance coverage shall be underwritten by companies licensed to do business in the State of Alaska. All policies required of GCICC shall be deemed to be primary and not contributing to or in excess of any similar insurance coverage purchased or maintained by ACS-AK.

11.3 Each policy shall contain a waiver of subrogation clause.

11.4 All policies, as permitted by law, shall be endorsed to name ACS-AK as an Additional Insured. GCICC shall produce Certificate(s) of Insurance, including a copy of the Additional Insured Endorsement prior to ACS-AK's performance under this contract and annually thereafter as long as GCICC uses or occupies collocation space. GCICC, or GCICC's insurer, shall provide ACS-AK with sixty (60) days advance written notice of any material change or cancellation of any of the coverage specified above. All insurance shall remain in force so long as this Agreement is in effect or GCICC's equipment remains within any collocation space, whichever is later. GCICC's obligation to provide insurance coverage is not limited to collocation activity, but is intended to cover any liability arising out of this Agreement.

Section 12 Confidentiality and Publicity

12.1 Subject to the limitations of Section 12.3, all information which is disclosed by one party ("Disclosing Party") to the other ("Recipient") in connection with this Agreement, or acquired in the course of performance of this Agreement, shall be deemed confidential and proprietary to the Disclosing Party and subject to this Agreement. Confidential or proprietary information shall be used for purposes of interconnection only and shall not be used in any way whatsoever for marketing. Such information includes

but not limited to, trade secrets, technical and business plans, technical information, proposals, specifications, drawings, procedures, customer account data, orders for services, usage information in any form.

12.2 Regardless of the means of disclosure, Information shall be protected by the receiving Party in accordance with the terms of this Section 12, provided that such Information should reasonably have been understood by the receiving Party, by virtue of legends or other markings or the circumstances of disclosure or the nature of the Information itself, to be proprietary and confidential to the disclosing Party. Each Party agrees that the Information it receives shall not be copied or reproduced in any form except to the extent reasonably necessary to such Party's exercise of its rights or performance of its obligations pursuant to this Agreement. Each Party agrees to protect the Information received from distribution, disclosure or dissemination to anyone except its employees and consultants with a need to know such Information. When requested as to specific information, each party agrees to provide the other with a list of persons receiving the confidential or proprietary information. Each Party will use the same standard of care to protect Information received as it would use to protect its own confidential and proprietary Information.

12.3 Notwithstanding the provisions of Section 12.1, there will be no obligation to protect any portion of Information that is (a) made available by the owner of the Information or lawfully disclosed by a nonParty to this Agreement; (b) lawfully obtained from any source other than the owner of the Information; (c) previously known to the receiving Party without an obligation to keep it confidential; or (d) independently developed by the receiving Party without use of the Information disclosed.

12.4 Disclosure of Information received shall not be prohibited to the extent such disclosure is compelled by a court or administrative agency having jurisdiction over the receiving Party or is otherwise required by law. In such event, however, the receiving Party shall use reasonable efforts to notify the other Party prior to making such disclosure and shall cooperate in the other Party's efforts to object to such disclosure or to obtain confidential treatment of the Information to be disclosed.

12.5 This Section 12 shall survive the termination or expiration of this Agreement with respect to any Information disclosed by one Party to the other while this Agreement was in effect. All Information shall be returned to the disclosing Party within a reasonable time following the disclosing Party's request following the termination or expiration of this Agreement.

Section 13 Warranties

EXCEPT AS SPECIFICALLY PROVIDED IN PART C – ATTACHMENT V, SECTION 7.9, NEITHER PARTY MAKES ANY REPRESENTATIONS OR WARRANTIES TO THE OTHER CONCERNING THE SPECIFIC QUALITY OF ANY SERVICES OR FACILITIES PROVIDED UNDER THIS AGREEMENT BOTH

PARTIES DISCLAIM, WITHOUT LIMITATION, ANY WARRANTY OR GUARANTEE OF MERCHANTABILITY OR FITNESS FOR A PARTICULAR PURPOSE, ARISING FROM COURSE OF PERFORMANCE, COURSE OF DEALING, OR FROM USAGES OF TRADE.

Section 14 Assignment and Subcontract

A Party shall have the right to assign this Agreement or any right, obligation or interest hereunder to an affiliated entity upon written notice to the other Party. Neither Party shall assign this Agreement, or any of its rights, obligations, or interest hereunder to a non-affiliated entity, without the prior written consent of the other Party, which consent shall not be unreasonably withheld. Any assignment or delegation in violation of this Section shall be void and ineffective, and shall constitute a default of this Agreement.

Section 15 Governing Law

The construction, interpretation, and performance of this agreement shall be governed by and construed in accordance with the laws of the State of Alaska except for its conflicts of laws provisions. In addition, insofar as and to the extent federal law may apply, federal law will control.

Section 16 Relationship of Parties

Each Party shall perform services hereunder as an independent contractor and nothing herein shall be construed as creating any other relationship between the Parties. Each Party and each Party's contractor shall be solely responsible for the withholding or payment of all applicable federal, state, and local income taxes, social security taxes, and other payroll taxes with respect to its employees, as well as any taxes, contributions, or other obligations imposed by applicable state unemployment or workers' compensation acts. Each Party has sole authority and responsibility to hire, fire, and otherwise control its employees.

Section 17 No Third Party Beneficiaries

The provisions of this Agreement are for the benefit of the Parties hereto and not for any other person, provided, however, that this shall not be construed to prevent GCICC from providing its Telecommunications Services to other carriers. This Agreement shall not provide any person not a party hereto with any remedy, claim, liability, reimbursement, claim of action, or other right in excess of those existing without reference hereto.

Section 18 Notices

Documents sent between ACS-AK and GCICC that require action within specified time frames shall be sent by certified mail with return receipt, facsimile, or hand delivered. Hand delivered documents shall be date stamped or noted otherwise by the receiving

party to record the date of receipt. The date and time of receipt shall be the date and time shown on the return receipt where certified mail was used, the date and time shown on the header if facsimile was used, or the date stamp where the documents were hand delivered.

To GCICC:

Name:	Gina Borland
Title:	VP and General Manager of Local Services
Address:	2550 Denali Street, Suite 1000 Anchorage, AK 99503
Name:	Mark Moderow
Title:	Corporate Counsel
Address:	2550 Denali Street, Suite 1000 Anchorage, AK 99503

To ACS-AK:

Name:	Jill Hume
Title:	Manager, Carrier Relations
Address:	600 Telephone Avenue, Suite MS60 Anchorage, Alaska 99503
Name:	Leonard Steinberg
Address:	General Counsel 600 Telephone Avenue, Suite MS65 Anchorage, Alaska 99503

Section 19 Waivers

19.1 No waiver of any provisions of this Agreement and no consent to any default under this Agreement shall be effective unless the same shall be in writing and properly executed by or on behalf of the Party against whom such waiver or consent is claimed.

19.2 No course of dealing or failure of any Party to strictly enforce any term, right, or condition of this Agreement in any instance shall be construed as a general waiver or relinquishment of such term, right or condition.

19.3 Waiver by either party of any default by the other Party shall not be deemed a waiver of any other default.

Section 20 Force Majeure

Neither Party shall be held liable for any delay or failure in performance of any part of this Agreement from any cause beyond its reasonable control and without its fault or negligence, such as acts of God, acts of civil or military authority, embargoes, epidemics, war, terrorist acts, riots, insurrections, fires, explosions, volcano eruptions, earthquakes, avalanches, tsunami, nuclear accidents, floods, power blackouts, strikes, work stoppage affecting a supplier or unusually severe weather. No delay or other failure to perform shall be excused pursuant to this Section 21 unless delay or failure and consequences thereof are beyond the control and without the fault or negligence of the Party claiming excusable delay or other failure to perform. In the event of any such excused delay in the performance of a Party's specific obligation(s) under this Agreement, the due date for the performance of such original obligation(s) shall be extended by a term equal to the time lost by reason of the delay, but such extension shall not work to extend the then current term of this Agreement. In the event of such delay, the delaying party shall provide notice to the other party of the force majeure event, the probable delay, and the arrangements for performance.

Section 21 Dispute Resolution

21.1 Any dispute between the Parties regarding the interpretation or enforcement of this Agreement or any of its terms shall be addressed in the first instance by the Parties through good faith negotiations, at the managerial level, for a minimum period of thirty (30) days.

21.2 Any dispute arising out of or relating to this Agreement that the Parties themselves cannot resolve through negotiation, pursuant to subsection 21.1, above, or subsection 21.3.4, below, may, by mutual consent, be submitted to alternate dispute resolution. In the event voluntary alternate dispute resolution is not agreeable, either party may proceed before any regulatory agency or court of competent jurisdiction. In the event a proceeding is brought before the Commission requesting an expedited exercise of its arbitration procedures, which may be opposed, and the request is granted, the expedited arbitration of such dispute may occur no later than sixty (60) days from the date of submission of responsive pleadings. During any proceeding each Party shall continue to perform its obligations under this Agreement provided, however, that neither Party shall be required to act in any unlawful fashion.

21.3 Disputes arising under Part C, Attachment X shall be resolved in accordance with Part C, Attachment X, Section 6, Dispute Resolution.

21.4 Billing Disputes

21.4.1 Any party disputing any bill for interconnection, services, or network elements received pursuant to this agreement shall tender timely payment for the disputed amount. Such payment shall be accompanied by a Billing Protest, which shall set forth (1) the amount alleged to be improperly billed and (2) the specific

reasons, legal and factual, establishing why the amount may have been improperly billed. The billing party shall provide a Response to such Billing Protest within 30 days. The billing party shall either accept or deny the Protest.

21.4.2 If the Protest is accepted, the billing party shall return the amount improperly billed within the 30 days required for its Response, with interest. If the Protest is denied, the billing party shall set forth in its Response its specific reasons, legal and factual, establishing why the disputed amount was properly billed. If the Protest is accepted in part and denied in part, the billing party shall return any undisputed amount within the 30 days required for its Response, with interest, and set forth in its Response its specific reasons, legal and factual, establishing why the remaining disputed amount has been properly billed.

21.4.3 Interest shall be assessed at the statutory rate set forth in AS 09.30.070.

21.4.4 Receipt of Billing Protest shall give rise to an immediate obligation of the parties to designate senior managers to confer and attempt to resolve the matter. If the Billing Protest has not been resolved within 20 days after a Response to the Billing Protest has been sent, the parties shall undertake mediation pursuant to §22.3 of this Agreement. Should any court or commission of competent jurisdiction subsequently determine that any amount tendered pursuant to a Billing Protest has been improperly billed and paid, the billing party shall repay the amount, with interest, from the time it was paid.

Section 22 Taxes

Any Federal, state or local excise, license, sales, use, or other taxes or tax-like charges (excluding any taxes levied on income) resulting from the performance of this Agreement shall be borne by the Party upon which the obligation for payment is imposed under applicable law, even if the obligation to collect and remit such taxes is placed upon the other party. Any such taxes shall be shown as separate items on applicable billing documents between the Parties. The Party obligated to collect and remit taxes shall do so unless the other Party provides such Party with the required evidence of exemption. The Party so obligated to pay any such taxes may contest the same in good faith, at its own expense, and shall be entitled to the benefit of any refund or recovery, provided that such party shall not permit any lien to exist on any asset of the other party by reason of the contest. The Party obligated to collect and remit taxes shall cooperate fully in any such contest by the other Party by providing records, testimony and such additional information or assistance as may reasonably be necessary to pursue the contest.

Section 23 Responsibility for Environmental Hazards

23.1 GCICC shall in no event be liable to ACS-AK for any costs whatsoever resulting from the presence or release of any Environmental Hazard that GCICC did not cause, introduce or contribute to the affected work location. ACS-AK hereby releases, and shall also indemnify, defend (at GCICC 's request) and hold harmless GCICC and each of

GCICC 's officers, directors and employees from and against any losses and expenses that arise out of or result from any Environmental Hazard that ACS-AK, its contractors, or its agents introduce to the work locations.

23.2 Prior to GCICC or its employees, contractors, or agents introducing an Environmental Hazard into a work location GCICC shall fully inform ACS-AK in writing of its planned actions at such work location and shall receive ACS-AK's written permission for such actions and GCICC warrants that it shall comply with all legal and regulatory obligations it has with respect to such Environmental Hazard and notices it is required to provide with respect thereto. ACS-AK shall in no event be liable to GCICC for any costs whatsoever resulting from the presence or release of any Environmental Hazard that GCICC causes, introduces or contributes to the affected work location. GCICC shall indemnify, defend (at ACS-AK's request) and hold harmless ACS-AK and each of ACS-AK's officers, directors and employees from and against any losses and expenses that arise out of or result from any Environmental Hazard that GCICC, its contractors or its agents cause, introduce, or contribute to the work location. GCICC shall be responsible for obtaining, including payment of associated fees, all environmental permits, licenses and/or registrations required for environmental hazards GCICC causes or introduces to the affected work location.

23.3 In the event any suspect material within ACS-AK-owned, operated or leased facilities are identified to be asbestos-containing, GCICC will, at GCICC 's expense, notify ACS-AK before commencing any activities and ensure that to the extent any activities which it undertakes in the facility disturb any asbestos-containing materials (ACM) or presumed asbestos containing materials (PACM) as defined in 29 CFR Section 1910.1001, such GCICC activities shall be undertaken in accordance with applicable local, state and federal environmental and health and safety statutes and regulations. Except for abatement activities undertaken by GCICC or equipment placement activities that result in the generation or disturbance of asbestos containing material, GCICC shall not have any responsibility for managing, nor be the owner of, nor have any liability for, or in connection with, any asbestos containing material. Both Parties agree to immediately notify the other if the Party undertakes any asbestos control or asbestos abatement activities that potentially could affect GCICC equipment or operations, including, but not limited to, contamination of equipment.

23.4 Within ten (10) business days of GCICC 's request for any space in ACS-AK owned or controlled facility, ACS-AK shall provide any information in its possession regarding the known environmental conditions of the space provided for placement of equipment and interconnection including, but not limited to, the existence and condition of any and all known or suspected asbestos containing materials, lead paint, hazardous or regulated substances, or any evidence of radon. Information is considered in ACS-AK's possession under this Agreement if it is in the possession of an employee, agent, or authorized representative of ACS-AK.

23.5 If the space provided for the placement of equipment, interconnection, or provision of service contains known environmental contamination or hazardous material,

particularly but not limited to hazardous levels of friable asbestos, lead paint or hazardous levels of radon, which makes the placement of such equipment or interconnection hazardous, ACS-AK shall offer an alternative space, if available, for GCICC 's consideration. If interconnection is complicated by the presence of environmental contamination or hazardous materials, and an alternative route is available, ACS-AK shall make such alternative route available for GCICC 's consideration.

23.6 Subject to this Section 24 and to ACS-AK's standard security procedures, which procedures will be provided to GCICC, ACS-AK shall allow GCICC at GCICC 's expense to perform any environmental site investigations, including, but not limited to, asbestos surveys, which GCICC deems to be necessary in support of its collocation needs. GCICC agrees to share the results of such investigations or surveys with ACS-AK.

Section 24 Amendments and Modifications

No provision of this Agreement shall be deemed waived, amended or modified by either party unless such a waiver, amendment or modification is in writing, dated, and signed by both Parties.

Section 25 Severability

Subject to Section 2 - Regulatory Approvals, if any part of this Agreement is held to be invalid for any reason by a regulatory agency or court having jurisdiction, such invalidity will affect only the portion of this Agreement which is invalid. In all other respects this Agreement will stand as if such invalid provision had not been a part thereof, and the remainder of the Agreement shall remain in full force and effect.

Section 26 Headings Not Controlling

The headings and numbering of Sections, Parts and Attachments in this Agreement are for convenience only and shall not be construed to define or limit any of the terms herein or affect the meaning or interpretation of this Agreement.

Section 27 Entire Agreement

This Agreement sets forth the entire understanding and supersedes prior agreements between the Parties relating to the subject matter contained herein and merges all prior discussions between them, and neither Party shall be bound by any definition, condition, provision, representation, warranty, covenant or promise other than as expressly stated in this Agreement or as it contemporaneously or subsequently set forth in writing and executed by a duly authorized officer or representative of the Party to be bound thereby.

Section 28 Counterparts

This Agreement may be executed in counterparts. Each counterpart shall be considered an original and such counterparts shall together constitute one and the same instrument.

Section 29 Successors and Assigns

This Agreement shall be binding upon, and inure to the benefit of, the Parties hereto and their respective successors and permitted assigns.

Section 30 Implementation Team

30.1 The parties agree to establish an Implementation Team within 30 days of approval of this agreement by the Commission. The purpose of the Team will be to identify and develop supplemental processes, operational procedures, and guidelines to implement the terms of this Agreement.

30.2 In establishing this Team the parties recognize that technical and operational coordination between the parties will be required to implement the arrangements and provisions of services established by this agreement. The parties further recognize that the many technical and operational procedures cannot be fully anticipated or resolved in advance of actual interconnection; and that, for many reasons, including the possible need to address interconnection with other interconnecting carriers, the procedures employed may change over time. The parties further recognize that they have a common interest in implementing this agreement in a practical and efficient manner, and in establishing a process for this purpose.

30.3 The Team will consist of two or more representatives of each company, to be designated in writing, who shall be familiar with the various operations of the parties established or required by this agreement. Either Party may include in meetings or activities, additional technical specialists or individuals as may be reasonably required to address a specific task, matter, or subject. Each Party may replace its Team members at any time upon written notice to the other Party.

30.4 Within one hundred twenty (120) days after the Approval Date, the implementation arrangements made by the Implementation Team insofar as they do not constitute an amendment, modification, or material clarification of this Agreement shall be documented in an Operations Manual. Should there be a conflict between the terms of this Agreement and the Operations Manual, the terms of this Agreement shall control. The manual may address the following matters and may address any other matters agreed upon by the Implementation Team:

- the administration and maintenance of the interconnecting networks
- disaster recovery and escalation provisions;

- access to Operations Support Systems functions provided hereunder, including gateways and interfaces;

- single points of contact for ordering, provisioning, billing and maintenance;

- service ordering and provisioning procedures, including provision of the trunks and facilities;

- conditioning and provisioning of collocation space and maintenance of collocated equipment;

- joint systems readiness and operational readiness plans;

- appropriate testing of services, equipment, facilities and Network Elements;

- procedures for coordination of local PIC changes and processing;

- physical and network security concerns;

- such other matters specifically referenced in this Agreement that are to be agreed upon by the Implementation Team; and

- 911 and E911 processes and procedures.

30.5 In the event that the Implementation Team cannot agree upon any matter, that matter may be referred to a senior manager of each company designated for this purpose. The managers shall then confer and seek to resolve the matter.

30.6 The parties further agree that any other CLEC entering any market with respect to any interconnection, services, or elements subject to this agreement, will have the right and opportunity to participate in the Implementation Team with respect to any such interconnection, services or elements.

30.7 The obligations set forth in this Agreement are not dependent upon the completion of the Operations Manual, or the participation by, or agreement of, another CLEC under section 31.6. Nothing in this section is intended to alter any existing legal obligation or remedy of any party, or to modify any other term of this Agreement. However, should the Implementation Team agree that amendment of this Agreement may be appropriate or necessary in order to accomplish its purposes in a more practical manner, the Team shall recommend such an amendment be promptly considered by the parties.

Section 31 Joint Work Product

This Agreement is the joint work product of representatives of the Parties. For convenience, it has been drafted in final form by one of the Parties. Accordingly, in the event of ambiguities, no inferences will be drawn against either Party solely on the basis of authorship of this Agreement.

Section 32 Parity of Service

ACS-AK shall perform its obligation and duties under the Agreement, and will provide services and network functions and elements, including, but not limited to, Local Interconnection, Services for Resale, and Network Elements, with a non-discriminatory, non-preferential quality of service and a level of performance at parity with that which it uses for its own operations or the operations of its affiliates or for the provision of services to its own subscribers, or the subscribers of its affiliates. Notwithstanding the foregoing, the Parties agree that the terms of Part C, Attachment X shall apply as written.

IN WITNESS WHEREOF, each of the Parties has caused this Agreement to be executed by its duly authorized representatives.

GCI Communication Corp.	**ACS of Alaska, Inc.**
By: Rick Hitz	By: K. L. Sprain
Name: Rick Hitz	Name: Ken Sprain
Title: VP, Reg Econ + Fin	Title: Sr. Vice President Operations
Date: 5/18/04	Date: 5-18-04

PART B – DEFINITIONS

For any term which is not defined in this Part B or elsewhere in this Agreement, the term shall have the meaning set forth in the Telecommunications Act of 1934, as amended, the Regulations of the Federal Communications Commission and the Regulatory Commission of Alaska, and the definitions as typically used within the telecommunications industry, such as those defined by the American National Standards Institute (ANSI), Bellcore and CCITT (Consultative Committee on International Telegraphy and Telephony).

"911 SERVICE" shall have the meaning set forth in 47 C.F.R. § 54.101(a)(5).

"AFFILIATE" shall have same meaning as "AFFILIATED INTERESTS" as set forth in A.S. 42.05.990(1).

"ANI" (AUTOMATIC NUMBER IDENTIFICATION) shall have the meaning set forth in 47 C.F.R. § 20.3.

"APPROVAL DATE" is the date on which Commission approval of the Agreement is granted.

"ATTACHMENT" is any placement of GCICC's facilities in or on ACS-AK's Poles, ducts, conduits, or Right of Way.

"BUSINESS DAY(S)" means the days of the week excluding Saturdays, Sundays, and all state legal holidays. Notwithstanding the foregoing, the term "Days" shall be applied in Part C, Attachment X, as defined therein.

"CENTRAL OFFICE SWITCH" or "CENTRAL OFFICE" means a switching entity within the public switched network, including but not limited to end office switches and Tandem Office Switches.

"CENTREX" means a Telecommunications Service associated with a specific grouping of lines that uses central office switching equipment for call routing to handle direct dialing of calls, and to provide numerous private branch exchange-like features.

"CLEC" means a Competitive Local Exchange Carrier.

"E911" (ENHANCED 911 SERVICE) shall have the meaning set forth in 47 C.F.R. § 54.101(a)(5).

"ENVIRONMENTAL HAZARD" means any substance the presence, use, transport, abandonment or disposal of which (i) requires investigation, remediation, compensation, fine or penalty under any Applicable Law (including, without limitation, the Comprehensive Environmental Response Compensation and Liability Act, Superfund Amendment and Reauthorization Act, Resource Conservation Recovery Act, the Occupational Safety and Health

Act) or (ii) poses risks to human health, or the environment and is regulated under any Applicable Law.

"EXTENDED OUTAGE", as used in the Pre-ordering, Ordering, and Provisioning section of this agreement, is defined to be a planned or unplanned outage during normal operating hours such that GCICC is unable to utilize electronic interfaces for more than four (4) consecutive business hours.

"FEEDER DISTRIBUTION INTERFACE" is where the trunk line or "feeder", leading back to the central office, and the "distribution" plant, branching out to the subscribers, meet, and "interface".

"GRANDFATHERED SERVICES" shall be those services referenced in 47 C.F.R. 51.615.

"HIGH FREQUENCY LOOP" shall have the meaning set forth in 47 C.F.R. 51.319 (h)

"LSR" shall mean Local Service Request.

"NETWORK ELEMENT" shall have the meaning set forth in 47 U.S.C. § 153(29).

"NP" (NUMBER PORTABILITY) shall have the meaning set forth in 47 U.S.C. § 153(30).

"OBF" means the Ordering and Billing Forum, which functions under the auspices of the Carrier Liaison Committee (CLC) of the Alliance for Telecommunications Industry Solutions (ATIS).

"OPERATOR SERVICES" shall have the meaning set forth in 47 U.S.C. § 226(a)(7).

"POLE" refers to ACS-AK Poles and anchors and does not include poles or anchors with respect to which ACS-AK has no legal authority to permit attachments by other persons or entities.

"PROVISIONING" shall have the meaning set forth in 47 C.F.R. 51.5.

"REAL TIME" means the actual time in which an event takes place, with the reporting on or the recording of the event simultaneous with its occurrence. In data processing or data communications, "real time" means the data is dispatched for processing the moment it enters a computer, as opposed to BATCH processing, where the information enters the system, is stored and is operated on a later time.

"SHARED TRANSPORT" shall have the meaning set forth in 47 C.F.R. § 51.319(d)(1)(ii).

"SIGNAL TRANSFER POINT" or "STP" shall have the meaning set forth in 47 C.F.R. 51.5.

"SUB-FEEDER" is a portion of the trunk line, or "feeder", that can be accessed without removing a splice case to reach the wire or fiber with-in.

"SWITCH" means a Central Office Switch as defined in this Part B.

"TECHNICALLY FEASIBLE" shall have the meaning set forth in 47 C.F.R. § 51.5.

"TELECOMMUNICATIONS" shall have the meaning set forth in 47 U.S.C. § 153(44).

"TELECOMMUNICATION SERVICES" shall have the meaning set forth in 47 U.S.C. § 153(44).

"UNBUNDLED NETWORK ELEMENT" shall have the meaning set forth in 47 U.S.C. § 251©(3) (with regard to unbundled access).

PART C – ATTACHMENT I

TABLE 1

Section 1 *Fairbanks/Juneau Rate Sheet*

Fairbanks/Juneau Rate Sheet

REQUIREMENTS	Fairbanks	Juneau
1.1 Loop		
2-Wire Loop, $ / loop / month through December 31, 2004	$ 19.19	$ 16.71
2-Wire Loop, $ / loop / month effective January 1, 2005	$ 23.00	$ 18.00
Subloop, all $ / loop / month		
a. Loop Feeder	$ 1.71	$1.78
b. Loop Distribution	$ 12.89	$ 10.81
c. Loop Concentrator/Multiplexer	$ 4.06	$ 3.63
d. Network Interface Device (NID)	$ 0.53	$ 0.49
DSL Loop, $ / loop / month through December 31, 2004	$ 19.19	$ 16.71
DSL Loop, $ / loop / month effective January 1, 2005	$ 23.00	$ 18.00
DSL Shared Line, $ / loop / month	$ 9.60	$ 8.36
End Office Switching, $ / switched minute		
a. Line Port, $ / line / month	$ 1.38	$ 1.57
b. Non-Line Port, $ / actual minute	$ 0.00203	$ 0.00243
Common Transport, $ / minute	$ 0.00023	$ 0.00026
Direct Transport, $ /minute	$ 0.00030	$ 0.00036
Tandem Switching, $ / minute	$ 0.00155	$ 0.00148
Signaling Links, $ / link / month	$ 54.11	$ 55.72
Signal Transfer Point (STP), $ / signaling message	$ 0.000090	$ 0.000110
Service Control Point (SCP), $ / query (See footnote 1)	$ 0.00097	$ 0.00114

1.2 Collocation		
Collocation		
Quote Preparation Fee, NRC	$ 2,083.99	$ 2,017.32
Floor Space: $ / Sq. Foot / Month	$ 9.53	$ 19.05

[1] Price for SCP does not include transport to and from SCP. Does not include services from a third party data base.

CO Build-Out	ICB	ICB
Cable Vault		
Splicing Copper (100pr.), NRC	$ 71.41	$ 74.51
Splicing Fiber (2 strands), NRC	$ 20.39	$ 21.27
Splice Testing		
Copper (100pr.), NRC	$ 9.26	$ 9.66
Fiber (2 strands), NRC	$ 5.12	$ 5.34
Cable Pull from		
Manhole to Cable Vault, NRC	$ 3,651.42	$ 3,810.06
" , $ / month	$ 78.14	$ 81.54
Cable Vault to the Trans. Node, NRC	$ 5,477.14	$ 5,715.08
" , $ / month	$ 15.40	$ 16.07
Entrance Facility		
Copper (100pr.), NRC	$ 202.78	$ 211.59
" , $ / month	$ 32.33	$ 36.68
Fiber (2 strands), NRC	$ 202.78	$ 211.59
" , $ / month	$ 28.21	$ 32.00
48 volts, DC (-48VDC), $ / 15amp / month	$ 153.06	$ 177.83
Cross Connect		
STS-x to OC-x, NRC	ICB	ICB
OC-x to OC-x, NRC	ICB	ICB
DS0, DS1, DS3, STS-x, NRC	$ 23.59	$ 24.61
Cable Space per 50 feet per 25 pair	ICB	ICB
Tie Cable Pull & Install (ISP Cable Pull, Install, Terminate), NRC	$ 1,143.34	$ 1,143.34
Rack Space and Frame Space per 1.75" by 23"	ICB	ICB
Optional Features and Functions, NRC	ICB	ICB
Operation and Maintenance, Time and Materials	ICB	ICB
Space Reservation Fee, NRC	$ 57.17	$ 114.33

1.3 Transport to End User (UNE Rates from WC to End User)

Digital Signal Level 1 (DS-1) $ / DS1 / month	$ 87.93	$ 85.42
Digital Signal Level 3 (DS-3), $ / DS3 / month Two components of cost: flat monthly fee to cover terminal equipment and a per foot charge to cover cost of fiber.	$ 1,919.76 + $ 0.0244 / ft for 1st DS3, additional DS3: $136.02	$ 2,014.41 + $ 0.0320 / ft for 1st DS3, additional DS3: $142.73
Synchronous Transport Signal 1 (STS-1) ICB Pricing	ICB	ICB
Synchronous Transport Signal 3 (STS-3) ICB Pricing	ICB	ICB

1.4 Multiplexing & DeMultiplexing

DS-0 to DS-1/ DS-1 to DS-0 Rate/Month	$ 219.80	$ 230.64
DS-1 to DS-3/ DS-3 to DS-1 Rate/Month	$ 377.50	$ 396.11
DS-1 to OC-1/OC-1 to DS-1 ICB Pricing	ICB	ICB
DS-1 to OC-3/OC-3 to DS-1 ICB Pricing	ICB	ICB
DS-3 to OC-3/OC-3 to DS-3 ICB Pricing	ICB	ICB
DS-3 to OC-12/OC-12 to DS-3 ICB Pricing	ICB	ICB
OC-3 to OC-12/OC-12 to OC-3 ICB Pricing	ICB	ICB

1.5 Digital Access Cross-Connect Systems (DACS)

DACS Port		
a. DS-1 Recurring Rate/Month	$ 42.62	$ 44.72
b. DS-1 Install NRC	$100.00	$100.00
b. DACS Port – DS-3 or STS-1 ICB	ICB	ICB
DACS Cross-connect		
a. DS-0 reconfiguration NRC	$36.00	$36.00
b. DS-1 reconfiguration NRC	ICB	ICB

1.6 Additional Rate Elements

Ducts, $ / conduit / foot / month	$ 0.146	$ 0.153
Dark Fiber, $ / strand / foot / month	$ 0.0122	$ 0.0160
OSS Capital Recovery, $ / transaction	See footnote 2	See footnote 2
Labor Rates Rate/Month		
Installation Foreman	$ 87.62	$ 87.62
General Plant Tech III	$ 87.46	$ 87.46
General Plant Tech II	$ 89.45	$ 89.45
Sub Foreman	$ 87.92	$ 87.92
Installer Repairman	$ 83.01	$ 83.01
Dispatch/Control Clerk	$ 62.10	$ 62.10
Plant Service Foreman	$ 88.48	$ 88.48
Group Assigner	$ 89.45	$ 89.45
Line Assigner II	$ 83.55	$ 83.55
Line Assigner I	$ 77.36	$ 77.36
Facilities Locate Clerk	$ 62.55	$ 62.55
Service Order Clerk	$ 60.82	$ 60.82
Supervisor CO Switch Engineer	$ 77.48	$ 77.48
Engineering Assistant	$ 50.27	$ 50.27

[2] The design of the final deliverable of OSS, electronic order entry, shall continue to be discussed between the parties, with weekly reports to the Commission's arbitrator. The allocation of the costs and their recovery shall be the subject of agreement between the parties, or , in the event the parties cannot agree, such matters may be presented for arbitration pursuant to RCA Order U-99-141/142/143(9)-(8/24/00).

Network Design Assistant	$ 52.37	$ 52.37
Network Design Engineer	$ 72.92	$ 72.92
Network Installation Foreman	$ 64.60	$ 64.60
Network Installation Tech	$ 75.43	$ 75.43
Network Switching Foreman	$ 80.17	$ 80.17
Network Switching Sub-Foreman	$ 77.03	$ 77.03
Network Switching Technician	$ 74.79	$ 74.79
Engineering Supervisor	$ 61.32	$ 61.32
Circuit Design Engineer	$ 68.33	$ 68.33
Transmission Engineer	$ 72.62	$ 72.62
Switching Engineer	$ 72.11	$ 72.11
Estimate Engineer	$ 102.81	$ 102.81
Engineering Foreman	$ 110.38	$ 110.38
Plant Engineer II	$ 106.92	$ 106.92
Plant Engineer I	$ 101.84	$ 101.84
Air Pressure Engineer	$ 104.97	$ 104.97
Records Engineer	$ 97.70	$ 97.70
Engineering Tech	$ 92.87	$ 92.87
Line Foreman	$ 108.17	$ 108.17
Cable Splicing Foreman	$ 107.27	$ 107.27
Cable Splicer	$ 101.68	$ 101.68
Lineman	$ 104.08	$ 104.08
Lead Construction Clerk	$ 82.76	$ 82.76
Construction Clerk	$ 80.08	$ 80.08
OSP Maintenance Foreman	$ 107.27	$ 107.27
OSP Maintenance Tech	$ 101.78	$ 101.78
Apprentice	$ 96.88	$ 96.88
Facilities Supervisor	$ 71.47	$ 71.47
Facilities Engineer	$ 70.58	$ 70.58
Contract Services Administrator	$ 58.75	$ 58.75
Facilities Project Specialist	$ 52.02	$ 52.02
Facilities Maintenance Foreman	$ 76.61	$ 76.61
Customer Service Rep	$ 69.17	$ 69.17
Line Assigner II Inside	$ 81.30	$ 81.30
Clerk Stenographer II	$ 73.38	$ 73.38

1.7 Non-Recurring Charges

NRC Model		
POTS/ISDN BRI Migration (TSR)	$ 1.09	$ 1.09
POTS/ISDN BRI Install (TSR)	$ 1.09	$ 1.09
POTS/ISDN BRI Migration (UNE Platform)	$ 1.09	$ 1.09
POTS/ISDN BRI Install (UNE Platform)	$ 1.09	$ 1.09
POTS/ISDN BRI Disconnect (TSR / UNE Platform)	$ 1.09	$ 1.09
POTS/ISDN BRI Migration (UNE Loop)	$ 9.87	$ 9.87
POTS/ISDN BRI Install (UNE Loop)	$ 9.59	$ 9.59
POTS/ISDN BRI Disconnect (UNE Loop)	$ 8.77	$ 8.77
Feature Changes	$ 1.09	$ 1.09
4 Wire Migration (UNE Loop)	$ 46.01	$ 46.01
4 Wire Install (UNE Loop)	$ 43.46	$ 43.46
4 Wire Disconnect (UNE Loop)	$ 34.48	$ 34.48
2 Wire Migration at the FDI	$ 44.36	$ 44.36
2 Wire Disconnect at the FDI	$ 42.98	$ 42.98
4 Wire Migration at the FDI	$ 118.14	$ 118.14
4 Wire Disconnect at the FDI	$ 82.52	$ 82.52
2 Wire Migration at 6 line NID	$ 81.97	$ 81.97
Channelized DS1 Virtual Feeder to RT Install	$ 37.91	$ 37.91
Channelized DS1 Virtual Feeder to RT Disconnect	$ 31.68	$ 31.68
DS1 Interoffice Transport Install	$ 20.27	$ 20.27
DS1 Interoffice Transport Disconnect	$ 9.05	$ 9.05
DS3 Interoffice Transport Install	$ 20.27	$ 20.27
DS3 Interoffice Transport Disconnect	$ 9.05	$ 9.05
DS1 Loop to Customer Premise Migration	$ 62.17	$ 62.17
DS1 Loop to Customer Premise Install	$ 48.41	$ 48.41
DS1 Loop to Customer Premise Disconnect	$ 37.24	$ 37.24
DS3 Loop to Customer Premise Migration	$ 57.89	$ 57.89
DS3 Loop to Customer Premise Install	$ 37.91	$ 37.91
DS3 Loop to Customer Premise Disconnect	$ 25.49	$ 25.49
Line Port (DS0, Analog, ISLU) Install	$ 9.28	$ 9.28
Line Port (DS0, Analog, ISLU) Disconnect	$ 8.73	$ 8.73
Channelized DS1 line port (TR-303-IDT) Install	$ 37.91	$ 37.91
Channelized DS1 line port (TR-303-IDT) Disconnect	$ 30.88	$ 30.88
Fiber Cross Connects Install (LGX)	$ 15.14	$ 15.14
Fiber Disconnect (LGX)	$ 16.43	$ 16.43

SS7 Links (DS0) Install	$ 51.19	$ 51.19
SS7 Links (DS0) Disconnect	$ 27.35	$ 27.35
SS7 Links (DS1) Install	$ 43.89	$ 43.89
SS7 Links (DS1) Disconnect	$ 20.25	$ 20.25
SS7 STP global title translations 'A Link' only Install	$ 46.74	$ 46.74
SS7 STP global title translations 'A Link' only Disconnect	$ 46.74	$ 46.74
SS7 STP message transfer part 'A Link' only (port) Install	$ 34.28	$ 34.28
SS7 STP message transfer part 'A Link' only (port) Disconnect	$ 33.03	$ 33.03
DSL Loop NRCs as stipulated:		
a. DSL EML Study 1.8 hours Engineer and .125 hours CSR	1.8 hrs Engineer, 0.125 hrs CSR	1.8 hrs Engineer, 0.125 hrs CSR
b. Field Test of Facility, no GCI participation T&M when requested	T&M	T&M
c. Field Test of Facility, GCI participation T&M when requested.	T&M	T&M
d. Removal of Bridge Taps – T&M	T&M	T&M
e. Removal of Load Coils T&M costs split 50/50	T&M	T&M
f. Remove Disturbers – T&M	T&M	T&M

1.8 Bill & Keep

Local to local traffic including ISP based on bill & keep	Bill & Keep	Bill & Keep

1.9 Wholesale

Wholesale Discount off of Retail Rates	
ACS-F	22.13%
ACS-AK – Juneau	27.17%
ACS-AK – Greatland through December 31, 2004	21.30%
ACS-AK – Greatland effective January 1, 2005	30.00%

PART C – ATTACHMENT II

LOCAL RESALE

Section 1 Telecommunications Services Provided for Resale

At the request of GCICC, and pursuant to the requirements of the Act, and FCC and Commission Rules and Regulations, ACS-AK shall make available to GCICC for resale Telecommunications Services that ACS-AK currently provides or may provide hereafter at retail to subscribers who are not telecommunications carriers. The Telecommunications Services provided by ACS-AK to GCICC pursuant to this Attachment II are collectively referred to as "Local Resale."

Section 2 General Terms and Conditions

2.1 Pricing
The prices charged to GCICC for Local Resale are set forth in Attachment I of this Agreement.

2.2 Grandfathered Services
ACS-AK shall offer for resale to GCICC all Grandfathered Services solely for the existing grandfathered base.

2.3 Contract Service Arrangements, Special Arrangements, and Promotions
ACS-AK shall offer for resale with the wholesale discount all of its Telecommunications Services available at retail to subscribers who are not Telecommunications Carriers, including but not limited to Contract Service Arrangements (or ICB), Special Arrangements (or ICB), and Promotions in excess of ninety (90) days, all in accordance with TCA, FCC and Commission Rules, Regulations, and tariffs.

PART C – ATTACHMENT III

NETWORK ELEMENTS

Section 1 General

Pursuant to the following terms, ACS-AK will unbundle and separately price and offer Unbundled Network Elements and Sub-elements such that GCICC will be able to subscribe to and interconnect to whichever of these unbundled elements GCICC requires for the purpose of providing local telephone service and exchange access service.

Section 2 Unbundled Network Elements

2.1 Network Elements

ACS-AK shall offer Network Elements to GCICC for the purpose of offering Telecommunications Services. ACS-AK shall offer Network Elements to GCICC on an unbundled basis on rates, terms and conditions that are just, reasonable, and non-discriminatory in accordance with the terms and conditions of the Agreement. The initial set of Network Elements includes:

a. Local Loop and Sub-Loop Elements

b. High Frequency Loop

c. Local Switching

d. Local Tandem Switching

e. Interoffice Transport

f. Signaling Networks and Call Related Databases

g. Transmission Facilities

h. Rights-of-Way, Ducts, Conduits, and Poles

i. Collocation

j. Operations Support Systems

k. Signaling Systems and Call-Related Databases

2.2 Network Elements Feature Functions

GCICC may use one or more Network Elements to provide any feature, function, capability, or service option that such Network Element(s) is technically capable of providing, subject to the requirements of the Act and the Commission's rules.

2.3 Standards for Network Elements

Each Network Element provided by ACS-AK to GCICC shall be at parity with the quality of design, performance, features, functions, capabilities and other characteristics, including but not limited to levels and types of redundant equipment and facilities for power, diversity and security, that ACS-AK provides to itself, ACS-AK's own subscribers, to a ACS-AK Affiliate and/or its subscribers, or to any other entity.

2.4 Combinations of Unbundled Network Elements

2.4.1 ACS-AK shall provide Unbundled Network Elements in a manner that allows GCICC to combine such network elements in order to provide a telecommunication service.

2.4.2 When GCICC orders Network Elements that are currently connected ACS-AK shall ensure Network Elements remain connected and functional without any disconnection or disruption. This shall be known as the combination of Network Elements. There shall be no charge for such pre-existing connections.

2.4.3 Combinations (including those that replicate ACS-AK end-user services) shall be priced at a level no greater than the sum total of the individual unbundled network element prices, including nonrecurring charges.

2.5 Unbundled network element-platform ("UNE-P") Availability

2.5.1 ACS-AK agrees that it will continue to provide GCICC with access to UNE-P, including access to unbundled local switching, dedicated and shared transport, and signaling, for any unbundled local loop that GCICC cannot access directly at any current GCICC collocation, or indirectly at any current GCICC collocation via a universal digital loop concentrator or a remote switching device that is currently equipped to accommodate multi-hosting, in the Juneau study area. For the purposes of this Agreement, the current GCICC collocations in Juneau are Juneau-Main and Sterling.

2.5.2 The terms of Section 2.5.1 apply notwithstanding any change of law governing access to unbundled network elements, including any provisions of the *Triennial Review Order*, any subsequent FCC rulemaking, the United States Court of Appeals for the D.C. Circuit decisions in *United States Telecom. Ass'n v. FCC*, 290 F.3d 415 (D.C. Cir. 2002), *United States Telecom. Ass'n v. FCC*, 359 F.3d 554 (D.C. Cir. 2004), and any subsequent court decisions.

2.5.3 The Parties agree that ACS-AK will process and provision all GCI orders for unbundled network elements in the Juneau study area as of June 30, 2004, and the restrictions on GCI access to unbundled network elements set forth in RCA Docket Nos. U-97-82, U-97-143, Order No. 15, and U-97-144, Order No. 16 shall no longer apply. GCI agrees that it will not seek access to unbundled network elements in the Greatland study area during the term of this agreement.

Section 3 Local Loop and Sub-Loop Elements

3.1 Definitions

3.1.1 A "Loop" is a transmission path between the main distribution frame, or its equivalent, and the demarcation point at a customer's premises. This includes, but is not limited to, two-wire copper or carrier derived analog voice-grade loops, and two-wire loops that are conditioned to transmit the digital signals needed to provide services such as ISDN, xDSL, and DS-1.

3.1.2 Unbundled Local Loop ("ULL") Types

3.1.2.1 Analog 2W Loop: A two-wire copper loop or carrier derived transmission facility that meets the performance and maintenance response requirements listed in Table 3.1.

3.1.2.2 Basic Rate ISDN Loop: A two wire copper loop which supports digital transmission of Basic Rate ISDN service and meets the performance and maintenance response requirements of Table 3.1.

3.1.2.3 HDSL Loop: A two-wire copper loop which supports digital transmission of HDSL signals and meets the performance and maintenance response requirements of Table 3.1. HDSL service provides for bi-directional transmission of data at speeds up to 1.544 Mb/s.

3.1.2.4 ADSL – Low Speed Loop: A two-wire copper loop which supports digital transmission of ADSL low speed signals and meets the performance and maintenance response requirements of Table 3.1. ADSL low speed service provides asymmetrical transmission of up to 1.54 Mb/s downstream and up to 512 kb/s upstream.

3.1.2.5 ADSL – High Speed Loop: A two-wire copper loop which supports digital transmission of ADSL high speed signals and meets the performance and maintenance response requirements of Table 3.1. ADSL high speed service provides asymmetrical transmission of up to 6 Mb/s downstream and up to 1.54 Mb/s upstream.

3.1.2.6 SDSL Loop: A two-wire copper loop which supports digital bi-directional transmission of SDSL signals and meets the performance and

maintenance response requirements of Table 3.1.. SDSL (symmetric or single pair digital subscriber loop) supports symmetrical upstream and down stream data rates.

3.1.2.7 HDSL-2 Loop: A two-wire copper loop which supports digital transmission of HDSL signals and meets the performance and maintenance response requirements of Table 3.1. HDSL service provides for bi-directional transmission of data at speeds up to 1.544 Mb/s.

3.1.2.8 MVL Low-Speed Loop: A two-wire copper loop which supports digital transmission of MVL signals and meets the performance and maintenance response requirements listed in Section 3, Table 3.1. MVL Low-Speed service provides bi-directional transmission of data at speeds up to 192 kb/s nominally.

3.1.2.9 MVL Medium-Speed Loop: A two-wire copper loop which supports digital transmission of MVL signals and meets the performance and maintenance response requirements listed in Section 3, Table 3.1. MVL Medium-Speed service provides bi-directional transmission of data at speeds up to 384 kb/s nominally.

3.1.2.10 MVL High-Speed Loop: A two-wire copper loop which supports digital transmission of MVL signals and meets the performance and maintenance response requirements listed in Section 3, Table 3.1. MVL High-Speed service provides bi-directional transmission of data at speeds up to 640 kb/s nominally.

3.1.2.11 SHDSL Loop: is a two-wire copper loop which supports digital transmission of SHDSL signals and meets the performance and maintenance response requirements listed in Table 3.1. SHDSL service provides for symmetrical transmission of data at speeds up to 2.36 Mb/s.

3.1.2.12 Future DSL Loop types. As new services and technologies evolve (e.g. VDSL) requiring loops with performance metrics not set forth in Table 3.1, the parties agree to jointly define the loop specifications and maintenance response times.

3.1.2.13 Shared Line: means the provision of xDSL-based service by a LEC and voiceband service by another LEC on the same loop. A shared line loop is a DSL-qualified loop that will meet the performance and maintenance response requirements listed in Table 3.1 for the type of DSL service provided. [Presently the only known DSL technologies that support Shared Line provisioning are High-speed and Low-speed ADSL and certain types of SDSL (Paradyne's MVL and Lucent's Superline). In the future other DSL types may also support Shared Line provisioning.]

Table 3.1

Ordering Code	Loop Type	Technical Standard	Char. Freq.	Loss @ Char. Freq.	Noise	Bridge Tap Allowed
VG	Analog 2W	N/A	1 kHz	<8 dB	<20dBrn C	YES
DSL-1	Basic Rate ISDN and MVL – Low Speed	ANSI T1.601 TR-NWT-000393 Note 8	40 kHz	<42 dB	<40 dBrn E Filter	Note 5
DSL-2	HDSL (1.5 Mbps) SDSL (768 kbps)	ANSI T1E1.4 TR 28 ITU G.991.1 *TA-NWT-001210*	196 kHz	<35 dB	<40 dBrn F Filter	Note 5
DSL-3	ADSL – Low Speed	ITU G.992.2 (Formerly G.lite)	300 kHz	<60 dB	<40 dBrn G Filter	Note 5
DSL-4	ADSL – High Speed	ITU G.992.1 ANSI T1.413 ISS. 2	1.1 MHz	<77 dB	<40 dBrn G Filter	Note 5
DSL-5	SDSL 4 Lines	TBD	65 kHz	<46 dB	TBD f Filter	Note 5
DSL-6	SDSL 6 Line	TBD	98 kHz	<41 dB	TBD F Filter	Note 5
DSL-7	HDSL-2 Note 9	ANSI T1E1.4 HDSL2	196 kHz	<35 dB	TBD F Filter	Note 5
DSL-8	MVL – Med. Speed	ANSI T1.601 TR-NWT-000393 Note 8	40 kHz	<34 dB	<40 dBrn E Filter	Note 5
DSL-9	MVL – High Speed	ANSI T1.601 TR-NWT-000393 Note 8	40 kHz	<20 dB	<40 dBrn E Filter	Note 5
DSL-10	SHDSL 192 kbps to 2.32 Mbps	ITU G.SHDSL (Working Title)	TBD	TBD	TBD	Note 5

The following notes pertain to Table 3.1

Note 1: All loop types will meet IEEE 820-1984 standards.

Note 2: All loop types will have a longitudinal balance of 60 dB minimum.

Note 3: All loop types will be free of unwanted grounds, loose connections, and foreign DC voltages.

Note 4: With the exception of the Analog 2W loop, all loop types will be free of load coils and any type of pair-gain equipment.

Note 5: With the exception of the Analog 2W loop, total bridge tap not to exceed 2,500 ft. with no single bridge tap greater than 2,000 ft. and no bridge tap within 100 ft. of either end.

Note 6: All loop types will be annotated in ACS-AK's facilities database by loop type for cable and spectral management purposes.

Note 7: E Filter: 1 kHz – 50 kHz F Filter: 5 kHz – 245kHz
G Filter: 20 kHz – 1100kHz

Note 8: These standards referenced are for ISDN BRI. Paradyne MVL is proprietary. However, MVL equipment complies with the frequency and signal power limits and operates within the permissible power spectral density mask for ISDN BRI equipment defined in ANSI T1.601. Paradyne MVL was granted FCC Part 68 compliance based upon this technical specification conformance.

Note 9: HDSL-2 as it exists in pre standard versions by some manufacturers (such as PairGain) is listed here in DSL-7 with the same parameters as DSL-2. HDSL-2 is listed separately to allow for changes once ANSI T1E1.4 HDSL2 is finalized.

Note 10: As new services and technologies evolve (e.g. VDSL) requiring loops with performance metrics not listed in this table or as the specifications change or evolve for those types of DSL listed, the parties agree to work together to jointly define new or modify currently listed loop specifications and modify the entries in this table as necessary to meet the service requirements for each loop type.

3.2 Integrated Digital Loop Carrier (IDLC)

3.2.1 Where ACS-AK uses Integrated Digital Loop Carriers (IDLC) or similar remote devices, ACS-AK will, where technically feasible, offer GCICC the opportunity to access UNE Loops. UNE Loop access will be through either physical or adjacent collocation of a GCICC DLC, purchase of UNE switching in

combination with the UNE Loop, Universal access to ACS-AK's IDLC, Integrated Network Architecture (INA) access to ACS-AK's IDLC, GR-303 or TR-008 Mode 1 multi-hosted access, or copper plant bypassing ACS's IDLC (typical UNE Loop) where copper is available.

3.2.2 The parties are currently testing Integrated Network Architecture Access and TR-008 mode 1 as an interface for GCICC to access UNE Loops where ACS-AK uses IDLC's. Depending on the outcome of these tests and if these methods are technically feasible and capable of being implemented without hardware or software changes ACS-AK will make these interfaces available to GCICC.

3.2.3 The parties agree that multi-hosting of Advanced Fiber Communications' IDLC's through GR-303 interfaces at this time is not technically feasible; however, the parties recognize that as hardware and software develop this may change. If the interfaces become technically feasible and capable of being implemented, ACS-AK agrees to offer this interface to GCICC. Prior to implementing and GR-303 equipment multi-hosting arrangement, the parties agree to conduct testing to validate technical feasibility and implementation capabilities. If, upon completion of the testing, it is agreed that feasibility and implementation are acceptable to the parties, then ACS-AK will offer these interfaces to GCICC. Disagreements regarding technical or implementation feasibility may be escalated by either party for resolution via the Dispute Resolution process.

3.3 Sub-loop Network Elements

The following sub-loop network elements are combinations of loop sub-elements and shall be orderable in the area covered by this contract and provisionable with the same or substantially similar processes and at the same intervals as Analog 2W loops.

3.3.1 "FEEDER FACILITIES" means the outside plant facilities (physical or derived) between the host central office and the Serving Area Interface (SAI), Feeder Distribution Interface (FDI) or Concentrator. Where Feeder Cable has been displaced or reinforced with a Concentrator and the Concentrator is deployed in Universal or Integrated Mode, a 'derived' feeder pair can be unbundled as a loop sub-element. Feeder (physical or derived) includes the termination on the central office Main Distribution Frame (MDF) and the SAI or FDI. Integrated mode interface at the Central Office is at the DSX1 level for dual host mode Integrated Digital Loop Carrier systems.

3.3.2 "DISTRIBUTION FACILITIES" means the facilities between the Serving Area Interface (SAI) or Feeder Distribution Interface (FDI) and Network Interface Device (NID) at the customer premises. Distribution facilities include the distribution cable, terminations on the SAI or FDI, the terminal or pedestal, the service drop, the NID, and all cross-connects in between.

3.3.3 "NETWORK INTERFACE DEVICE" (NID) is an isolation device located at the customer's premise that serves as the demarcation point for service and provides a means for isolating the customer's inside wire from the outside plant cable system.

3.4 DSL – Qualified Loops

3.4.1 General

A DSL-qualified UNE Loop is any of the loop types as defined in the UNE definitions, "Section 3, Loop", with the exception of the loop type "Analog 2W".

3.4.2 Ordering and Provisioning

3.4.2.1 GCICC may order a "paper" transmission study to any service address to determine the feasibility of that address supporting DSL service. Such "paper" transmission study (hereinafter referred to as "EML study") will be performed by ACS-AK from its outside plant records and will include the cable plant make-up of the loop to the specific service address summarizing such items as wire gauge and types by section and distance, the presence of bridge tap(s), their locations and lengths, and presence of load coils or any other transmission equipment that could affect the performance of DSL on the loop, and an Estimated Measured Loss (EML) analysis of the loop. EML analysis will be computed for all characteristic frequencies listed on Table 3.1, for all types of DSL services.

3.4.2.2 If service to a specific address is not feasible due to the presence of load coils, GCICC may request an estimate from ACS-AK for the cost of removal of the load coils and the timeframe in which load coils can be removed.

3.4.2.3 Based on the outcome of the EML analysis, such analysis to have been performed within the previous 18 months, GCICC may order one or more DSL-qualified UNE Loops to a specific service address. GCICC in its order will specify the type of DSL loop(s) needed, and whether or not the DSL loop will be provisioned as a Shared Line DSL In its order to ACS-AK, GCICC will also specify if it wishes to have ACS-AK perform line conditioning in the form of bridge tap and/or load coil removal. ACS-AK will determine the availability of cable pairs to the service location and whether or not the location can be served with the requested DSL service/loop.

a. If cable pair(s) are available and the EML indicates the loop(s) will meet the specifications for the type of loop ordered without line conditioning, ACS-AK will provide a firm order

confirmation (FOC) date to GCICC in the manner and within the timeframe set forth in Part C, Attachment X.

b. If the service address can not be served because of "no outside plant" conditions, ACS-AK will notify GCICC of that information. ACS-AK will, within 15 calendar days, provide GCICC with an estimated completion date for the outside plant work. As soon as possible, ACS-AK will provide GCICC with a FOC date for the availability of the pair(s). GCICC can either cancel its order at this time, or request that ACS-AK leave the order in OSP held order status until ACS-AK can provide cable pairs to the location.

c. If cable pair(s) are available but there are spectrum management issues that do not allow the provision of the ordered DSL type, ACS-AK will so inform GCICC and provide the cost to move disturbers, if practical to do so. At this time, GCICC can cancel its order or order ACS-AK to move disturbers. Within 15 business days, ACS-AK will provide GCICC with its FOC date for availability of the pair(s), if the order is not canceled.

3.4.2.4 For all DSL-qualified loops ACS-AK will upon completion of GCICC's order, label the pair(s) at the NID at the service address and provide GCICC with line insulation test (LIT) and continuity test results. Line insulation tests check the loop for basic POTS (Analog 2W) service per Table 3.1 and include at minimum checks for the presence of foreign voltages, faults to ground, loop resistance, measured insertion loss at 1004 Hz, c-message weighted noise, and after March 31, 2001, or sooner when available, longitudinal balance. If GCICC reviews the test data or through its own testing finds that the loop does not meet the requirements of Table 3.1, GCICC will open a repair trouble ticket with ACS-AK to get the loop repaired so that it meets the required limits ACS-AK will again provide LIT test results at the completion of its repair of the pair(s). Billing to GCICC for the pair(s) will not start until GCICC accepts the loop test results unless GCICC fails to accept the loop or fails to open a repair trouble ticket within three business days of the Order Completion date.

3.4.2.5 If GCICC measures the loop and the actual characteristic frequency loss is greater than the limits of Table 3.1, GCICC may open a trouble ticket with ACS-AK to repair the loop so that it meets the limits of Table 3.1. If ACS-AK finds it must remove a bridge tap to effect repair to meet the loss predicted by the EML study or if GCICC has failed to order bridge tap removal and they should have for the particular DSL loop type ordered, such bridge tap removal will be at GCICC's expense. If ACS-AK determines that it must perform a new EML study to determine the location of a bridge tap not reflected in the current EML study, GCICC

will additionally incur the cost of such new EML study. Unless bridge tap removal is required, GCICC will also be given credit for the loop until such time as the EML meets the requirements of Table 3.1.

3.4.2.6 If ACS-AK cannot provide the ordered pair(s) that meets the requirements of the ordered DSL type which necessitates that GCICC cancel its order, GCICC will incur no DSL loop provisioning cost (except those costs for the EML study and transaction fee if ordered).

3.4.2.7 Charges for ordering, provisioning, testing and conditioning of DSL loops will be per the table in Part C attachment 1.. Field-testing and/or transmission studies of DSL loops will only be conducted at GCICC request. GCICC may order a change in DSL loop type for an existing DSL-qualified loop if such loop meets the technical performance requirements of Table 3.1 for the new loop type requested per the results of the EML study. DSL-qualified loops will be delivered to GCICC on a nondiscriminatory basis in the same fashion and equal to the same level of service that ACS-AK provides to its own customers. ACS-AK will not guarantee that any service can be delivered over the loops, but rather that they meet the specifications of Table 3.1.

3.4.2.8 GCICC may order a field test, hereinafter referred to as an AML (Actual Measured Loss), of a DSL loop. GCICC will pay the appropriate DSL test charge per the table in Part C Attachment 1. The test will include measurements listed in Table 3.1.

3.4.2.9 GCICC shall not place more than 1 DSL order and 1 EML study per serving area per day. If GCICC orders an EML study, ACS-AK shall have the study returned to GCICC no more than 5 business days after GCICC places the order for the study. If the DSL loop meets specifications and doesn't need conditioning ACS-AK shall deliver the DSL loop to GCICC no later than 7 days after the order is placed. If line conditioning is ordered, ACS-AK will remove bridge taps within 2 weeks and load coils within 30 days. If GCICC orders cable rearrangements to clear disturbers, ACS-AK will do so within two weeks. If ACS-AK must effect repair activity as a result of the above provisioning process, it will do so within 2 business days.

3.4.3 Record Keeping and Disturber Management

3.4.3.1 The GCICC DSL-qualified cable pairs will be assigned and annotated in ACS-AK' Facilities Database as "DSL-qualified Loops". These loops will not be subject to any kind of future modification that would cause them to fall out of compliance with the specific DSL technical performance specifications in Table 3.1.

3.4.3.2 ACS-AK will manage its outside plant with regards to spectrum compatibility of all services. GCICC DSL loops will not be subject to modifications that would cause them to fall out of compliance with the specific DSL technical performance specifications. If ACS-AK needs to rearrange its plant where the potential exists to cause a GCICC DSL loop to fall out of specifications, ACS-AK will obtain GCICC's concurrence prior to doing such rearrangement. The parties agree to work cooperatively on these matters.

Section 4 Local Switching

4.1 Definition

Local Switching is the Network Element that provides the functionality required to connect the appropriate lines or trunks wired to the Main Distributing Frame (MDF) or Digital Cross Connect (DSX) panel to a desired line or trunk. Such functionality shall include all of the features, functions, and capabilities that the underlying ACS-AK switch providing such Local Switching function provides for ACS-AK's own services. Functionality may include, but is not limited to: line signaling and signaling software, digit reception, dialed number translations, call screening, routing, recording, call supervision, dial tone, switching, telephone number provisioning, announcements, calling features and capabilities (including call processing), Centrex, or Centrex like services, Automatic Call Distributor (ACD), pre-subscription (e.g., long distance Carrier, intraLATA toll), Carrier Identification Code (CIC) portability capabilities, testing and other operational features inherent to the switch and switch software.

4.2 Technical Requirements

4.2.1 ACS-AK shall provide its standard recorded announcements (as designated by GCICC) and call progress tones to alert callers of call progress and disposition. GCICC will use the Bona Fide Request process for unique announcements in accordance with Section 6 of Part A of this Agreement.

4.2.2 ACS-AK shall control congestion points such as mass calling events, and network routing abnormalities, using capabilities such as Automatic Call Gapping, Automatic Congestion Control, and Network Routing Overflow. Application of such control shall be competitively neutral and not favor any user of unbundled switching or ACS-AK.

4.2.3 ACS-AK shall offer all Local Switching features that are resident in the switching system for a particular serving area whether those features are offered to its own customers or not. GCICC will pay any expense that ACS-AK incurs to make these features available to GCICC, when such features are not provided to ACS-AK customers. To the extent ACS-AK does not offer certain features to its own customers, those features shall be provided to GCICC at parity with the way they are provided by ACS-AK to itself or any other party.

4.2.4 ACS-AK will make available a connection from the local switch to shared transport facilities.

4.2.5 When GCICC's orders specifies that a customer is to be switched from ACS-AK local service to ACS-AK service resold by GCICC, the customer will become a GCICC customer without the loss or change of feature functionality unless the changes are ordered by GCICC.

4.3 Interface Requirements

4.3.1 ACS-AK shall provide the following interfaces to loops:

4.3.1.1 Standard Tip/Ring interface including loopstart or groundstart, on-hook signaling (e.g., for calling number, calling name and message waiting lamp);

4.3.1.2 Coin phone signaling;

4.3.1.3 Basic and Primary Rate Interface ISDN adhering to appropriate ANSI standards and;

4.3.1.4 Two-wire analog interface to PBX to include reverse battery, E&M, wink start and DID;

4.3.1.5 Four-wire analog interface to PBX to include reverse battery, E&M, wink start and DID;

4.3.1.6 Four-wire DS1 interface to PBX or subscriber provided equipment (e.g., computers and voice response systems);

4.3.1.7 GR-303 and TR-008 interfaces to integrated digital loop carrier systems, when equipped.

4.4 ACS-AK shall provide access to interfaces, including but not limited to:

4.4.1 SS7, Dial Pulse, or Multi-Frequency trunking if requested by GCICC. In the case of SS7 trunking, SS7 signaling will be provided through the ACS-AK Anchorage STPs at the same rates that ACS-AK charges itself (tariffed rates).

4.4.2 Interface to GCICC operator services systems or Operator Services through appropriate trunk interconnections for the system; and

4.4.3 Interface to GCICC directory assistance services through GCICC switched network or to Directory Services through the appropriate trunk interconnections for the system.

4.4.4 950 access or other GCICC required access to inter-exchange carriers as requested through appropriate trunk interfaces.

Section 5 Local Tandem Switching

5.1 Definition

A local tandem (or intermediate) switch is a switch that has direct trunks to two or more connecting switches. The connecting switches can be local end offices, mobile telephone switching offices (cellular or PCS), Interexchange Carriers, paging systems, 911 Public Service Answering Points (PSAPs) or any other type of switch that can originate or terminate telephone traffic. Remote line modules and digital loop carrier systems are not connecting switches because they are connected to the host local switch with proprietary links, not trunks. A tandem switch can route traffic between any one connecting switch and any other connecting switch. The Local tandem switch can also serve as a local end-office.

5.2 Technical Requirements

5.2.1 The requirements for Local Tandem Switching include, but are not limited to, the following:

5.2.1.1 Where ACS-AK employs a local tandem switch to route calls between local switches in the same rate area, ACS-AK will provide GCICC interconnection to that local tandem switch for the routing of local voice and/or data traffic to and from all connecting switches, and to and from the local tandem itself if the local tandem also serves as a local end office.

5.2.2 Tandem Switching shall preserve CLASS/LASS features and Caller ID as traffic is processed.

5.2.3 Tandem Switching shall control congestion by employing network management features such as Automatic Congestion Control and Overflow Routing. The method employed in GCICC traffic shall be at parity with controls being provided or imposed on ACS-AK traffic (e.g. ACS-AK shall not restrict or block GCICC traffic and leave ACS-AK's traffic unaffected or less affected.)

5.2.4 To the extent technically feasible and ordered by GCICC, the local tandem switch shall record billable events. GCICC will reimburse ACS-AK for any incremental costs associated with providing this capability. ACS-AK shall send the billing information to the billing center designated by GCICC.

5.3 Interface Requirements

Tandem Switching shall employ all signaling necessary to process telephone traffic with no loss of feature functionality.

Section 6 Transport

6.1 Shared Transport

6.1.1 Definition: Shared Transport is transmission facilities shared by more than one carrier, including the incumbent LEC, between end office switches, between end office switches and tandem switches, and between tandem switches, in the incumbent LEC's network.

6.1.2 ACS-AK shall offer Shared Transport at DS0, DS1, DS3, STS-1 or higher transmission bit rate circuits.

6.1.3 ACS-AK shall be responsible for the engineering, provisioning, and maintenance of the underlying equipment and facilities that are used to provide Shared Transport.

6.2 Dedicated Transport

6.2.1 Definition: Dedicated Transport provides a local interoffice transmission path between ACS-AK and/or GCICC central offices/service node. Dedicated transport is limited to the use of a single carrier and does not require switching at a Local Tandem.

6.2.2 Technical Requirements

Where technologically feasible and available, ACS-AK shall offer Dedicated Transport consistent with the underlying technology as follows:

6.2.2.1 When ACS-AK provides Dedicated Transport as a circuit or a system, the entire designated transmission circuit or system (e.g., DS1, DS3, STS-1) shall be dedicated to GCICC designated traffic.

6.2.2.2 Where ACS-AK has technology available, ACS-AK shall offer Dedicated Transport using currently available technologies including, but not limited to, DS1 and DS3 transport systems, SONET (or SDH) Bi-directional Line Switched Rings, SONET (or SDH) Unidirectional Path Switched Rings, and SONET (or SDH) point-to-point transport systems

(including linear add-drop systems), at all available technologies and transmission bit rates.

Section 7 Transmission Facilities

7.1 Description: A Transmission Facility is comprised of one or more of the following network elements: the transport between a customer's premise and the serving central office (wire center), multiplexing, or DACS service. The transport can be a T-1 circuit or a T-3 circuit; multiplexing can be DS-1 to DS-0 or DS-3 to DS-1. DACS service includes the port(s) and one or more digital cross-connects. A Transmission Facility can also be dark fiber.

7.2 T-1 (DS-1) – North American standard for a digital transmission link with a total transmission rate of 1.544 Mb/s. The circuit may be ordered as AMI or B8ZS, D4 or ESF framing, channelized or non-channelized. Circuit may be delivered over repeated span lines, HDSL facilities, or optical carrier facilities. Demarcation is at the DS-1 level on a DSX-1 patch panel or appropriate FCC registered jack.

7.3 T-3 (DS-3) – North American standard for a digital transmission link with a total transmission rate of 44.736 Mb/s. Circuit will be delivered over optical carrier facilities. Demarcation is at the DS-3 level on a DSX-3 patch panel.

7.4 Multiplexing – The aggregation of two or more channels onto a single transmission facility. The combining of several lower fixed-bandwidth channels into a single channel with bandwidth equal to the sum of the individual channels plus any overhead. Multiplexing also includes demultiplexing which is the process of breaking down a composite signal into its constituent parts. Multiplexing can be ordered as M1/0 or M3/1. For example, multiplexing can be the aggregation of multiple DS-1 signals into a DS-3. De-multiplexing is the reverse process.

7.5 M1/0 Multiplexing – The aggregation of multiple DS-0 channels into a single DS-1 service and vice-versa.

7.6 M3/1 Multiplexing – The aggregation of multiple DS-1 channels into a single DS-3 service and vice-versa.

7.7 DACS (Digital Access Cross-connect System) – An intelligent software-based network element used to administer the assignment of channel bandwidth on digital facilities. Essentially a "switch" for which electronic cross-connections are established via an administrative process, and appropriate for supporting semi-permanent connections. Interconnection to a DACS will be via DS-1 or DS-3 ports.

7.8 Dark Fiber – A fiber optic cable strand that is leased without electronics or optronics (no connected transmitters, receivers, or regenerators).

Section 8 Right-of-Way, Conduits, and Pole Attachments

ACS-AK shall make Right-of-Way, Conduit, and Pole Attachments available to GCICC as set forth in Part C – Attachment VI.

Section 9 Collocation

ACS-AK shall make Collocation available to GCICC as set forth in Part C – Attachment V.

Section 10 Operations Support Systems

ACS-AK shall provide access to Operations Support Systems as set forth in Part C – Attachment IV.

Section 11 Directory Assistance Service Routing

ACS-AK shall provide for the routing of directory assistance calls (including but not limited to 411, 555-1212, NPA-555-1212) dialed by GCICC subscribers directly to the DA service platform of GCICC's choice.

Section 12 Operator Services Routing

ACS-AK shall provide for the routing of local Operator Services calls (including but not limited to 0+, 0-) dialed by GCICC subscribers directly to the GCICC operator service platform.

Section 13 Signaling Systems and Call-Related Databases

13.1 ACS-AK shall provide, and shall not impair, GCICC non-discriminatory access to signaling links, Signal Transfer Points (STPs) and Signal Control Points (SCPs), if any, in conjunction with unbundled switching, and on a stand-alone basis. The SS7 network includes, but is not limited to, signaling links and STPs.

13.2 ACS-AK shall provide, and shall not impair, GCICC non-discriminatory access to SCPs and call-related databases, if any, including, but not limited to, the Line Identification Database (LIDB), Number Portability database, Calling Name (CNAM) database, Toll Free number database, Advanced Intelligent Network (AIN) databases, and the AIN platform and architecture. ACS-AK is not required to unbundle access to certain AIN software that qualifies for proprietary treatment.

13.3 Nondiscriminatory access to ACS-AK's SS7 network shall fully support the functions of all other network elements connected to the ACS-AK SS7 network. These include local switching, local tandem switching, and service control points.

13.4 Connection to ACS-AK's SS7 network elements will be in accordance with industry standards using the appropriate link set types. GCICC may connect to any one or more of ACS-AK's SS7 network elements.

PART C – ATTACHMENT IV

GENERAL INTERCONNECTION AND OPERATIONAL REQUIREMENTS

Section 1 Procedures

1.1 Contact with Subscribers.

1.2 ACS-AK and GCICC shall act as the single point of contact for their subscriber's service needs. Each shall make it clear to their subscribers that they are the service provider. ACS-AK will explain to end-users that it is acting on GCICC's behalf when applicable. In those cases where GCICC or ACS-AK has contact with subscribers of the other company incidental to performing services under this agreement, they shall not use the contact as an opportunity to

(i) provide information about their own products or services or

(ii) disparage or discriminate against the other carrier, its products, or services.

1.3 All subscriber inquiries solely regarding the other company's products or services will be referred to the other company. ACS-AK and GCICC shall provide appropriate referrals to subscribers of the other carrier inquiring about services or products of the other carrier. Both companies shall instruct their personnel to not disparage the others products or services during such contacts.

1.4 Neither carrier shall use the other carrier's request for subscriber information, order submission, or any other aspect of processes or services provided under this agreement to aid in marketing or sales efforts.

1.5 Expedite and Escalation Procedures

1.5.1 The parties recognize that unforeseen or emergency circumstances may require expedited response times and/or escalation procedures. ACS-AK and GCICC shall provide escalation and expedite methods and procedures, consistent with current practices, which may be invoked at any point in the Service Pre-Ordering, Ordering, Provisioning, Maintenance, Repair, and Subscriber Usage Data transfer processes to facilitate rapid and timely resolution for issues surrounding customer services, orders, or disputes. The methods and procedures shall provide non-discriminatory treatment. For example, where feasible, overtime technician call outs made to expedite orders will be processed anonymously, i.e. without reference to the carrier involved.

1.5.2 Within thirty (30) days after RCA Approval of this Agreement, ACS-AK and GCICC will provide to each other a contact list for handling subscriber and other matters requiring attention/resolution outside of normal business procedures. ACS-AK and GCICC shall notify each other of any changes to its contact list at least one (1) week before such changes are effective.

1.5.3 No later than thirty (30) days after RCA approval of this Agreement, ACS-AK and GCICC shall provide each other with contingency plans for those cases in which normal processes, interfaces, or systems are inoperable. ACS-AK will also provide contingency plans for those cases in which ACS-AK's unbundled Network Elements, features, functions, and resale services purchased by GCICC are inoperable.

1.6 Subscriber of Record

ACS-AK shall recognize GCICC as the billing Subscriber of Record for all Network Elements or services for resale ordered by GCICC and shall send all notices, invoices, and information which pertains to such ordered services directly to GCICC. GCICC will provide ACS-AK with addresses to which ACS-AK shall send all such notices, invoices, and information.

1.7 Service Offerings

In response to a Network Bona Fide Request, following any public notice required by law of changes to ACS-AK's network, or upon GCICC's request, ACS-AK shall provide GCICC with access to any new service, feature and function as soon as it is installed, tested, priced and available in the network.

1.8 Blocking Services Offered

ACS-AK will make available to GCICC any and all blocking features and functions ACS-AK's switch is capable of providing.

1.9 Essential Services

ACS-AK shall provide priority emergency restoral for GCICC essential service lines in a nondiscriminatory manner relative to ACS-AK essential service lines. Within 90 days of RCA approval of this agreement, ACS-AK and GCICC shall agree on a common definition of essential service lines. Service restoral will be consistent with applicable state or federal law and regulations.

1.10 TTY/TDD

ACS-AK shall cooperate with GCICC to provide Telecommunications Services at parity to serve TTY/TDD subscribers.

Section 2 Basic 911 and E 911 Emergency Service

2.1 Description

Basic 911 and E911 service provides a caller access to the appropriate emergency service bureau by dialing the 3-digit universal telephone number '911'.

2.2 General Requirements

2.2.1 Where ACS-AK is the primary service provider or contractor responsible for maintaining all or part of the Basic 911 or E911 system in any service area covered under this Agreement, ACS-AK and GCICC shall work cooperatively to ensure the proper interface with GCICC's Basic 911 or Enhanced 911 service and facilities. ACS-AK and GCICC will provide each other with any technical specifications necessary for proper network design and a description of any special routing arrangements required to accommodate alternate routing or overflow of 911/E911 traffic.

2.2.2 As required, ACS-AK shall interconnect trunks from GCICC's network to the appropriate switch, E911 system, E911 PSAP, or E911 Tandem. GCICC and ACS-AK recognize that there may be hardware restrictions, such as availability of DS-1 ports, that may require sharing of facilities. Where selective routing is employed, ACS-AK will ensure the proper routing of 911/E911 traffic based on data received from GCICC's network. GCICC shall ensure that its network provides the ANI and signaling information required by the appropriate switch, E911 tandem, E911 system, or E911 PSAP.

2.2.3 Trunking shall be arranged to minimize the likelihood of central office isolation where facilities and equipment are available, due to cable cuts or other equipment failures. Any GCICC 911/E911 circuits or facilities provided by ACS-AK shall have physical and electrical diversity when such diversity can be achieved using existing facilities. Circuits will be divided as equally as possible across available GCICC systems. There will be an alternate means of transmitting a 911 call to a PSAP in the event of failures if provided by the PSAP.

2.2.4 All 911/E911 trunks must be capable of transmitting and receiving Baudot code or ASCII text necessary to support the use of Telecommunications Devices for the Deaf (TTY/TDDs).

2.2.5 Where GCICC or ACS-AK utilize any circuit or facility from the other to access the PSAP, circuit layout records and physical routing of such facilities will be provided so that each entity can appropriately design and provision a diverse PSAP access network.

2.2.6 Where GCICC provides local service by purchasing ACS-AK's services at wholesale rates and reselling it, ACS-AK will ensure that 911/E911 service is available to the same extent it is for ACS-AK's customers.

2.2.7 Any Basic 911 or E911 services, support, or facilities provided by ACS-AK or GCICC shall be at parity with the services, support and facilities that ACS-AK or GCICC provides to itself and its subscribers. In providing Basic 911 or E911 services, ACS-AK and GCICC shall conform to all state regulations concerning emergency services.

2.3 Basic 911 and E911 Database Requirements

2.3.1 Where ACS-AK is the primary 911-service provider or is otherwise responsible for maintaining the E911 database for any service area covered under this agreement, ACS-AK will be responsible for maintaining the E911 database(s) for GCICC. GCICC shall be solely responsible for providing GCICC database records to ACS-AK for inclusion in the E911 database. GCICC shall provide database records according to a format provided by ACS-AK. ACS-AK shall accept electronic updates from GCICC no less frequently than daily. The National Emergency Number Association ("NENA") code for GCICC is "GCICC" (GCICC followed by 2 spaces). ACS-AK shall work cooperatively with GCICC to ensure the accuracy of the data transfer by verifying it against the Master Street Address Guide (MSAG). If ACS-AK detects an error in GCICC provided data, the data shall be returned to GCICC within one (1) business day of the time the error was detected. GCICC shall respond to requests from ACS-AK to make corrections to errors by providing corrected records within two (2) business days. ACS-AK shall update the database with GCICC records within one (1) business day or with the same frequency that ACS-AK updates the database with its own records, whichever is less. These time frames are guidelines and are established in the interest of public safety. ACS-AK will make every effort to meet these response times; however, GCICC recognizes that seasonal impacts or other extraordinary circumstances may impact ACS-AK's ability to meet these requirements. Where ACS-AK is responsible for maintaining the E911 routing database for any service area covered under this agreement, ACS-AK will be responsible for maintaining the E911 routing database for GCICC.

2.3.2 GCICC shall assign an E911 database coordinator charged with the responsibility of forwarding GCICC end user ANI/ALI record information to ACS-AK or via a third-party entity, charged with the responsibility of ANI/ALI record transfer. GCICC assumes all responsibility for the accuracy of the data that GCICC provides to ACS-AK. ACS-AK and GCICC shall jointly research each ANI/ALI discrepancy report. Corrective action shall be taken immediately by the responsible party.

2.3.3 GCICC will provide the Emergency Service Bureaus with a single point of contact for inquiries about GCICC's customers.

2.3.4 Where there are multiple ANI/ALI databases involved, ACS-AK will provide a single point of contact for ANI/ALI database issues.

2.3.5 ACS-AK agrees to treat all data on GCICC subscribers provided under this Agreement as strictly confidential and to use data on GCICC subscribers only for the purpose of providing E911 services.

2.4 Basic 911 and E911 Maintenance

2.4.1 Each party shall be responsible for those portions of the 911 system for which it has control, including any necessary maintenance to each party's portion of the 911 System.

2.4.2 ACS-AK will provide the Emergency Service Bureaus with a single point of contact for trouble reporting. ACS-AK will investigate trouble reports and notify GCICC's Network Operations Control Center if ACS-AK determines the problem to be in GCICC's network or facilities.

2.4.3 ACS-AK shall begin restoration of any Basic 911 and/or E911 facilities for which ACS-AK is responsible immediately upon notification or observation of failure or outage. ACS-AK will provide priority restoration of GCICC trunks or network outages on the same terms and conditions it provides itself without imposition of Telecommunications Service Priority (TSP).

2.4.4 ACS-AK shall notify GCICC's Network Operation Control Center 48 hours in advance of any scheduled testing or maintenance affecting GCICC 911 service, and provide notification as soon as possible of any unscheduled outage affecting GCICC 911 service.

2.4.5 ACS-AK shall notify GCICC's Engineering Department in advance of any planned or anticipated changes to the E911 system, facilities, routing, or databases that could adversely affect GCICC's 911/E911 service or require GCICC to modify its 911/E911 network. Notification of changes that require modifications to GCICC's network shall be given sufficiently in advance to allow GCICC a reasonable amount of time to effect the modifications.

2.5 Master Street Address Guide (MSAG)

ACS-AK will provide to GCICC, within 60 days of RCA approval of this agreement, and on an as-requested basis thereafter, the Master Street Address Guide or equivalent data file that is used to validate addresses where 911 services are offered in the geographic areas covered under this agreement. This information will be provided in electronic industry-standard format.

2.6 Miscellaneous Provisions

2.6.1 If a third party is the primary 911/E911-service provider to a government agency, or if a third party ever becomes the primary 911/E911-service provider to a government agency, GCICC shall negotiate separately with such third party with regard to the provision of 911/E911 service to the agency. All relations between such third party and GCICC are totally separate from this Agreement and ACS-AK makes no representations on behalf of the third party.

2.6.2 If GCICC or its Affiliate ever becomes the primary 911/E911 service provider to a government agency, GCICC and ACS-AK shall negotiate the specific provisions necessary for providing 911/E911 service to the agency and shall include such provisions in an amendment to this Agreement.

Section 3 LIDB

3.1 GCICC and ACS-AK shall each be responsible for providing timely and accurate information to a national Line Information DataBase (LIDB) for end users receiving dial tone from that company's switch. The information to be provided is for the purposes of Call Blocking and Billing Name/Address Inquiries. In the event that the LIDB vendor contracted by either company is unable to properly maintain LIDB data on ported numbers, GCICC and ACS-AK agree to exchange LIDB data electronically for subscribers with ported numbers to be included with the regular transmission of data to the vendor.

3.2 ACS-AK and GCICC agree to treat all exchange of LIDB data for subscribers provided under this Agreement as strictly confidential and to use data on subscribers only for the purpose of accurately updating LIDB services.

Section 4 Pre-Ordering, Ordering, And Provisioning

4.1 General Requirements

4.1.1 Methods
ACS-AK shall provide GCICC with methods to request and receive pre-order information and place service orders for the telecommunications services described in this Agreement. These methods shall allow GCICC to request and receive pre-ordering information in the same time frames as ACS-AK personnel do, place service orders, receive due dates, and activate services. Requirements for processing and provisioning interval metrics, reporting, and recurring cost credits are set forth in Part C, Attachment X.

4.2 Electronic Interfaces
ACS-AK shall provide GCICC with electronic interfaces to receive pre-order information and, where available, place service orders. Detailed specifications of new interfaces will be determined as development occurs.

4.2.1 Non-Electronic Process
Where methods are non-electronic or electronic interfaces are temporarily unavailable, submission of data will be made in a standard format provided by ACS-AK. To facilitate faster customer response times, ACS-AK will accept requests for preorder information or service orders using customer service representatives connected to an automatic call distribution system or via email. ACS-AK and GCICC will put into place alternative procedures for the processing of pre-order and order requests in the event of a prolonged network or system failure.

4.2.2 ACS-AK shall provide detailed specifications for such methods, electronic or non-electronic, to GCICC within 30 days of RCA approval of this contract and subject to GCICC's execution of ACS-AK's standard nondisclosure agreement. ACS-AK will provide 90 days notice prior to implementing changes to these systems.

4.3 ACS-AK and GCICC will process all pre-order and order requests in a nondiscriminatory manner. Each company will process such requests in timeframes consistent with those that exist in providing service to its own retail and other LEC customers. Notwithstanding the foregoing, ACS-AK will process orders in accordance with the terms of Part C, Attachment X.

4.3.1 Offer Codes
For each switch within the area covered by this agreement, ACS-AK will provide active switch offer codes to GCICC upon request.

4.4 Field Work

4.4.1 GCICC will be allowed to request the scheduling of field work during any 4 hour A.M. or P.M. period of the business day. To the extent these requests can be met, based upon workload and manpower, GCICC will be provided the requested scheduled time period. If a requested time period cannot be met, ACS-AK will notify GCICC as soon as ACS-AK is aware the requested time period cannot be accommodated.

4.4.2 Tagged Terminations
ACS-AK will assure that all fieldwork required by ACS-AK to complete a GCICC order will result in appropriately tagged termination information at the NID.

4.5 Conversions
ACS-AK and GCICC shall allow direct communication between wire center technicians and/or NOCs, with a open order or trouble ticket, in order to speed conversion activities and responses on conversion troubles.

4.6 ACS-AK shall cancel all associated telephone-based calling cards upon migration of an end-user to GCICC.

4.7 ACS-AK shall not disconnect any GCICC subscriber service or existing features at any time without a minimum 24-hour notice to GCICC.

4.8 For Resale Services, ACS-AK shall not disconnect any subscriber service or feature at any time during the migration of the subscriber to GCICC.

4.9 Evening Conversions
ACS-AK and GCICC will allow for conversions of customers after 5 P.M. when required. For these subscriber conversions ACS-AK and GCICC will agree on a scheduled conversion time within a thirty minute window, on a designated date. Generally these conversions will be isolated to business accounts. End user service interruptions shall be held to a minimum; typically, these conversions will not result in customers losing dial tone or having a reduced level of service for more than 5 minutes. The technician will contact GCICC immediately upon completion of each customer conversion.

4.10 Coordinated Conversions
For subscriber conversions requiring coordinated cut-over activities, ACS-AK and GCICC will agree on a scheduled conversion time, which will be a designated time period within a designated date. End user service interruptions shall be held to a minimum; typically, these conversions will not result in customers losing dial tone for more than 5 minutes.

4.11 Disconnect or Loss Report
ACS-AK will provide a daily disconnection or loss report to GCICC. This report will detail the WTNs which have been converted to another CLEC or to ACS-AK in sufficient detail to invoke billing system changes at GCICC.

4.12 Service Suspensions/Restorations
Upon GCICC's request through Suspend/Restore Order, or mutually agreed upon interim procedure, ACS-AK shall suspend or restore the functionality of any Network Element, feature, function, or resale service to which suspend/restore is applicable. ACS-AK shall provide restoration priority on a per network element basis in a manner that conforms to any applicable regulatory rules, regulations, or government requirements.

4.13 Provisioning Service

4.13.1 Provisioning service is the process whereby the customer receives the services requested in the service order. ACS-AK shall perform all provisioning for GCICC customers in ACS-AK systems.

4.13.2 The provisioning will be done via automated flow through provisioning from GCICC's LSR, without human interaction, whenever feasible and in the same manner ACS-AK provides for its own use.

4.13.3 It is agreed between GCICC and ACS-AK that the provisioning of orders will be accomplished in the most expeditious manner available with the minimum amount of disruption to the customer's service. Notwithstanding the foregoing, ACS-AK will process orders in accordance with the terms of Part C, Attachment X.

Section 5 Exchange of Information

A single point of contact for technical issues relating to Electronic Interfaces will be designated by ACS-AK and by GCICC within 30 days of RCA approval of this agreement. In the event of technical problems with the transmission of data or operation of electronic interfaces, ACS-AK and GCICC agree to take reasonable measures to restore normal operations in the shortest possible time frame. All electronic exchange of data will use a secure transmission method and format provided by ACS-AK. ACS-AK and GCICC agree to use the available electronic interfaces for the exchange of data whenever available.

Section 6 System Availability

ACS-AK will provide GCICC with the schedule of standard operating hours for each electronic interface. GCICC will be notified 10 business days in advance of any planned outages or changes to standard operating hours that will impact electronic interface availability. ACS-AK will notify GCICC of any OSS or OSS related outage (during the standard operating hours of OSS) within 15 minutes of outage occurrence.
In the event of an extended outage, ACS-AK agrees that the Minimum Performance Section in this agreement for pre-ordering, ordering, and provisioning customer service is the required response during the outage period.

Section 7 Local Carrier Service Center (LCSC)/Single Point of Contact (SPOC)

ACS-AK and GCICC shall provide a Local Carrier Service Center or equivalent which shall serve as a Single Point of Contact (SPOC) for procedures concerning all activities involved in the ordering, provisioning, and maintenance of ACS-AK's unbundled Network Elements, features, functions, and resale services. ACS-AK will provide a method to coordinate scheduling, status, and dispatch capabilities during normal business hours. This SPOC must be staffed adequately to respond in the same time frame GCICC or ACS-AK respond to retail or special contract customers for telephone answer times, order entry, confirmations, completions, due dates, repairs, etc.

Section 8 Modification, Enhancement or Development of New Methods, Manual or Electronic

The parties recognize that changes to methods, processes, and procedures will occur as improvements to systems become available. Whenever ACS-AK determines that the methods described herein need to be upgraded, it will provide GCICC notice sufficient for GCICC to make necessary changes to take advantage of any improvements. ACS-AK will also discuss with GCICC implementation timeframes and accommodate GCICC's reasonable needs consistent with ACS-AK's obligations to other customers. If GCICC believes that a particular change will have a material and adverse impact on its ability to exercise its rights under this agreement, GCICC may invoke the Dispute Resolution process described in Section 22 of Part A of this agreement. ACS-AK will not proceed with the change until the ADR is complete.

Section 9 Telephone Number Management/Reservations

9.1 ACS-AK will provide a real time electronic interface as defined in Appendix A (Available Interfaces) for GCICC to view available telephone numbers and to perform simple reservation requests within ACS-AK's number management system. If ACS-AK does not receive a valid order for service within 30 calendar days from GCICC following the reservation of a phone number via the electronic interface, the reservation will be automatically released. For complex requests or in the event the electronic interface is not operational due an extended outage, ACS-AK will provide GCICC with inventories of phone numbers in each number management area covered by this agreement. The phone numbers on the inventory will be reserved exclusively for GCICC and will not be available for assignment by ACS-AK or any other company other than GCICC. In any event GCICC's access to telephone numbers shall be on an equal basis to that which ACS-AK provides itself.

9.2 During the time that a phone number is secured with a reservation by GCICC, ACS-AK shall not assign that number to any of ACS-AK's customers or allow the number to be assigned to a customer of any company other than GCICC.

9.3 ACS-AK and GCICC agree that number reservation will only be utilized for the purpose of a valid service order. At no time will either company utilize the number reservation interface for the purpose of hoarding numbers.

Section 10 Intercept Treatment and Transfer Service Announcements

ACS-AK shall provide unbranded intercept treatment and transfer of service announcements to GCICC's wholesale subscribers. ACS-AK shall provide such treatment and transfer of service announcement in accordance with local tariffs and as provided to similarly situated ACS-AK subscribers for all service disconnects, suspensions, or transfers.

Section 11 Changes in services

ACS-AK will provide a at least 60 days notice for changes/discontinuation of services so that GCICC has an opportunity to make the necessary modifications to its ordering, billing, and customer service systems, and so that it can provide sufficient customer notification regarding any changes. If available, ACS-AK will provide substitute services and/or elements.

Section 12 Access to customer data

12.1 Access shall be provided to the customer data for any GCICC or ACS-AK subscriber without requiring production of a signed Letter of Agency (LOA), based the blanket representation that the subscriber has authorized the requesting party to obtain such data. ACS-AK and GCICC have the right, at any time, to audit a claim that a valid LOA exists. Upon 5 business days' notice, ACS-AK or GCICC shall produce, either in person or electronically, a copy of the valid LOA. If a dispute arises, and the dispute resolution process described in Section 22 of Part A is invoked, neither GCICC nor ACS-AK will block, disconnect or deny access to customer data, electronic order processing, provisioning of services or any other processes or procedures defined in this agreement during the Dispute Resolution process.

12.2 Service Requirements
Unless otherwise directed by GCICC and when technically capable, when GCICC orders resale services or Network Elements all trunk or telephone numbers currently associated with existing services shall be retained without loss of feature capability and without loss of associated ancillary services including, but not limited to, Directory Assistance and 911/E911 capability.

12.3 View Customer Record
ACS-AK will provide a real time electronic interface for GCICC to obtain customer data. For information requests that cannot be provided through the electronic interface, ACS-AK agrees to provide the data within 1 business day using an alternate data gathering process. ACS-AK will provide data via the alternate process for a maximum of 5 accounts or 50 lines per day. If requests requiring alternate processes exceed 5 accounts or 50 lines per day ACS-AK and GCICC shall negotiate the return dates.

12.4 Service Address Validation and Facilities Availability
ACS-AK will provide a real-time electronic interface for validating service addresses and providing information about available facilities. Where the service address is determined to be invalid, ACS-AK will provide GCICC with existing alternatives for the address sent to ACS-AK. Where GCICC is unable to validate an address it believes to be correct, ACS-AK agrees to work with GCICC to resolve any respective systems discrepancies and determine the correct address.

12.5 Estimated Due Date

ACS-AK will provide a real-time electronic interface for GCICC to use to calculate the expected due date for providing a given service at a specified location. The interface will allow GCICC to view the availability of work units for GCICC use in scheduling installation appointments.

12.6 Service Address Guide (SAG) Extract

ACS-AK will provide to GCICC an extract of valid service addresses within the geographic area covered under this agreement within 90 days of GCICC's request, but not more often than quarterly. The extract will be provided electronically in a mutually agreed upon format, and will include the serving wire center (and if applicable, zones within wire centers) for each address and an indicator as to whether the address can be provisioned using unbundled facilities or wholesale. GCICC agrees that this information will be used solely for the accurate provisioning of service orders and will not include customer proprietary information such as customer name or telephone numbers.

Section 13 Ordering

13.1 Order Entry

13.1.1 ACS-AK will provide a real time electronic interface for GCICC to place revise or cancel service orders. The electronic interface will provide GCICC with the capability to submit orders for all order types supported by industry standards, but at a minimum, for both loop and resale activities:

- New Installations for existing subscribers
- New installations for new subscribers
- Changes to existing services
- Additions to existing services or service addresses
- Feature adds, changes, or deletes
- Partial disconnects
- Disconnects
- Moves (F&T)
- Record changes
- Conversion orders as is, with changes or Port only

- Suspend and restoral of service
- Rearrangements of existing accounts
- Inside moves of physical termination within a building

13.1.2 Orders submitted through the interface will be entered and flow through ACS-AK operational support systems in a method and within timeframes consistent with orders entered directly by ACS-AK personnel.

13.1.3 Order Status Data
ACS-AK shall provide to GCICC a real time electronic interface to view order status, or be noticed of status change on orders.

13.1.4 Firm Order Confirmation (FOC)
ACS-AK will provide a FOC notification to GCICC via a real time electronic interface. The FOC will be issued to GCICC within one hour or less of an electronic order submittal.

13.1.5 Order Rejections

13.1.5.1 When an order is rejected ACS-AK shall return the rejected LSR to GCICC, including with the return one or more reject reasons within one hour or less of an electronic order submittal.

13.1.5.2 GCICC shall review and either correct and resubmit, or contact ACS-AK for assistance to resolve.

13.1.6 Order completion
ACS-AK will provide an Order Completion date to GCICC via a real time electronic interface. The Order Completion will be issued to GCICC within one hour or less of order close data entry into the system by ACS-AK, for all orders submitted electronically

13.1.7 LSR Revisions
GCICC will revise orders by issuing supplements to open LSRs. LSR Supplements must be submitted by GCICC prior to noon of the day preceding the due date.

13.1.8 Disconnects
GCICC will send all disconnects via warm transfer. Disconnects must complete within 8 hours, 7:30am - 5:00pm, business days, of order receipt at ACS-AK, or upon the GCICC's requested due date, whichever is later.

Section 14 Service Standards

ACS-AK shall provide nondiscriminatory, non-preferential services to GCICC that have substantially the same characteristics of timeliness and performance as ACS-AK provides to itself, its affiliates (hereinafter referred to as "ACS-AK's actual performance"). ACS-AK's service performance shall be no worse than or no less than the specific performance threshold of ACS-AK's actual performance for the equivalent service, and services will meet the same technical criteria ACS-AK uses in its own network. Services will be provisioned, tested, repaired, and maintained at and to the same or like standards and intervals that ACS-AK uses within its own network and for its own end user customers in like circumstances. Notwithstanding the foregoing, ACS-AK will process orders in accordance with the terms of Part C, Attachment X.

Section 15 Reports

15.1 Reporting by ACS-AK with respect to processing and provisioning intervals shall be provided in accordance with the terms of Part C, Attachment X.

15.2 ACS-AK will provide reports, no less frequently than monthly, that detail system average repair timeframes, testing statistics, and other factors necessary for GCICC to determine the level of service ACS-AK provides to all of its customers, including GCICC. If, after comparing this data to its own record of services provided to GCICC, GCICC determines that it is materially disadvantaged due to materially degraded service quality, GCICC shall notify ACS-AK of this discrepancy. If the parties are unable to resolve the apparent conflict within thirty (30) days, the Parties shall engage in the Dispute Resolution process set forth in Section 22 of Part A, and within that process, GCICC may request an Audit or Examination of ACS-AK's operations.

15.3 Telephone Response – At a minimum, ACS-AK shall provide reports of the percentage of calls answered within 30 seconds or less, and any other relative measurements the reports reflect of the ACD ACS-AK uses to process GCICC orders and the ACD ACS-AK uses to process retail orders. These reports will be provided monthly. If GCI believes it needs further information than provided by ACS on this ACD report, GCI may engage the Dispute Resolution process set forth in Section 22 of Part A,

15.4 Repair – Upon request by GCICC, in conjunction with 16.3 above, ACS-AK shall provide the following statistics by trouble ticket type (out of service and non-out of service): repair intervals (the time a ticket was opened and closed, total number of hours out of service). This report shall reflect, at a minimum, the total GCICC tickets and total ACS-AK tickets for a calendar month, separated business and residential, and must include a monthly summary of average repair times per type of troubles for GCICC and ACS-AK.

15.5 System Interface, Network Reliability – ACS-AK shall provide "outage" statistics monthly to GCICC for all systems, interfaces or networks affecting GCICC access to OSS.

Section 16 Improvement Plan Implementation

16.1 ACS-AK will provide improvement plans for each area in which standards are not met due to circumstances under their control. These plans, including implementation timelines, will be provided to GCICC. The plans may include such things as increased staffing, change to procedures in order to meet standards, etc.

16.2 Documentation – Documentation, as appropriate to the identified problem, will include reports and Performance Improvement Plans, which result in compliance with agreed upon performance standards and may include:

a. evaluation of the opportunity for continuous improvement, systems enhancements and re-engineering;

b. forecasted improvement to the desired Performance Standard for each issue or initiative;

c. current and improved upon processes;

d. control processes which ACS-AK management will use for the transitional period;

e. evaluation of pertinent changes in periodic (monthly, weekly) results;

f. opportunities for source and root cause analyses; and

g. a date for compliance with Performance Improvement Plans implementation.

16.3 Performance Improvement plans will be reviewed monthly or, more frequently as updated data and analyses are available.

Section 17 Format

17.1 Sections below include the information to be provided by electronic interfaces and (where applicable) additional data to be provided that is not included in the electronic format. It is noted that these may need to be modified over time to accommodate alterations to software or business practices. When such alterations are required, ACS-AK and GCICC agree to use the process outlined in the *Modification, Enhancement or Development of New Methods, Manual or Electronic* section in this Agreement.

17.2 The following Electronic Interfaces are immediately available to GCICC:

17.2.1 Reserve Telephone Number

17.2.2 View Customer Record (some manual data gathering still required)

17.2.3 Service Address Validation and View Available Facilities

17.2.4 Calculate Estimated Due Date

17.2.5 View Installation Calendar

17.2.6 Firm Order Confirmation

17.2.7 Order Completion

17.2.8 Trouble Ticket Submission/Modification

17.3 The following Interface will be available to GCICC by June 30, 2001:

17.3.1 Electronic Order Submittal and flow through provisioning

17.3.2 Amend Remedy Ticket

17.3.3 Notices via Remedy

17.4 This interface will be developed based upon OBF standards (as agreed to and modified by both parties).

17.5 Facilities Reservations is a potential future Interface without a defined date

17.6 Work force management is a potential future Interface without a defined date

17.7 Telephone Number Management/Reservations – Following is the information to be provided for electronic Telephone Number Management/Reservation.

- Company Code
- Completion Code
- Customer Carrier Name Abbreviation
- Date And Time Sent
- Error Description
- Inquiry Activity
- Inquiry Number
- Inquiry Response Number
- Inquiry Type *** - deleted
- PIC List (CICs)
- Quantity Of Numbers Requested
- Requested (Telephone) Number
- Service Address Building ID
- Service Address Descriptive Location
- Service Address Floor Identifier
- Service Address House Number
- Service Address House Number Suffix
- Service Address House Prefix
- Service Address Locality
- Service Address Room ID
- Service Address Street Directional
- Service Address Street Name
- Service Address Street Suffix
- Service Address State/Province
- Service Address Thoroughfare

- Service Address Zip Code
- Telephone Number Response
- Type of Service

17.8 View Customer Record

A valid request from GCICC will consist of a customer account number, working telephone number or circuit ID, along with an indicator that GCICC has met the *requirements outlined in the previous section for the release of customer data.* ACS-AK will return, at a minimum, the following information to the extent it is available in any systems at ACS-AK:

a. Customer Billing Information (names and addresses, customer type, service class)

b. Working telephone numbers and service names/addresses

c. Serving Office and Wire Center

d. Directory and 411 listing information, including current yellow page classification headings on record.

e. LIDB information

f. Services and Features provisioned

g. Current LD PIC information

h. All configurations in place for LOD (Line Overflow to Directory Number), CFW (Call Forward), and RCF (Remote Call Forward)

i. All Directory Number Hunt information, including assigned numbers and the sequence in the hunt string

j. Indicate whether the telephone number or circuits listed have a Pending Order against them

k. *Following is the information to be provided for electronic customer* records.

- Account Number
- Account Telephone Number
- Address Indicator
- Agency Authorization Status
- Alpha/Numeric Listing Identifier Code
- Authorization Name
- Blocking Exceptions
- Building
- Business/Residence Placement Override
- Channel Code– ACS-AK cannot provide electronically
- City
- Class of Service
- Company Code

- Completion Code
- Concatenated Address Information
- Customer Carrier Name Abbreviation
- Date And Time Sent
- Date Of Agency Authorization
- Delivery Address
- Delivery Address Descriptive Location
- Delivery Address House Number
- Delivery Address House Number Suffix
- Delivery Address House Prefix
- Delivery Address Locality
- Delivery Address Location
- Delivery Address State/Province
- Delivery Address Street Directional
- Delivery Address Street Name
- Delivery Address Street Suffix
- Delivery Address Thoroughfare
- Delivery Address Type
- Delivery Address Zip Code
- Designation
- DID Digits Out– ACS-AK cannot provide electronically
- DID Route Index Number– ACS-AK cannot provide electronically
- DID Telephone Line Identifier– ACS-AK cannot provide electronically
- DID Trunk Group Number– ACS-AK cannot provide electronically
- DID Trunk Identifier– ACS-AK cannot provide electronically
- DID Trunk Quantity– ACS-AK cannot provide electronically
- Direct Mail List
- Directory ID for Directory Delivery
- Directory ID Type
- Directory Identifier
- Directory Name
- Directory Subsection
- Do not Abbreviated Listed object
- Dual Name Listing
- End User Name
- End User Name
- Error Code
- Error Description
- Exchange Company Circuit ID
- Feature Codes
- Feature Detail
- Floor
- Freeze PIC Indicator
- Hunt Group Identification– ACS-AK cannot provide electronically
- Hunting Sequence– ACS-AK cannot provide electronically
- Hunting Type Code
- Indent Text
- Inquiry Number
- InterLATA Presubscription Indicator Code
- International Presubscription Indicator Code
- IntraLATA Presubscription Indicator Code
- Line of Text Reference Number
- Listed Address
- Listed Address House Number
- Listed Address House Number Suffix
- Listed Address House Prefix
- Listed Address Locality
- Listed Address Location
- Listed Address State/Province
- Listed Address Street Directional
- Listed Address Street Name
- Listed Address Street Suffix
- Listed Address Thoroughfare
- Listed Address Zip Code
- Listed Name
- Listed Name First
- Listed Name Last
- Listed Telephone Number
- Listed Text Type
- Listing Name Placement
- Listing Nickname
- Listing Text
- Listing Type
- Local Service Termination
- Network Channel Code– ACS-AK cannot provide electronically
- Network Channel Interface Code

- No Solicitation Indicator
- Non Standard Telephone Number
- Number of Delivery Segments
- Number of Directories for Annual Delivery
- Omit From Secondary Directory
- Omit Telephone Number (TN)
- Place Listing As
- Professional Identifier
- Pulsing Type
- Record Type
- Room
- Secondary Network Channel Interface Code
- Service Address
- Service Address Descriptive Location
- Service Address House Number
- Service Address House Number Suffix
- Service Address House Prefix
- Service Address Locality
- Service Address Location
- Service Address State/Province
- Service Address Street Directional
- Service Address Street Name
- Service Address Street Suffix
- Service Address Thoroughfare
- Service Address Zip Code
- Service Center 1
- Service Center 2
- Signaling – ACS-AK cannot provide electronically
- Special Exemptions
- Standard Industrial Classification
- Start Signaling
- State/Province
- Street Address Directory
- Style Code
- Telemarketing
- Terminal Numbers
- Title of Address 1
- Title of Address 2
- Title of Lineage
- Transaction Type
- TTY or TDD Indicator
- TTY or TDD Indicator
- Type of Account
- Type of Service
- White Page Products
- Working Telephone Number
- Yellow Page Heading Code
- Yellow Page Heading Verbiage
- Zip Code

17.9 In addition to the information indicated above, ACS-AK shall make the following information available to GCICC either electronically or through a manual method:

17.9.1 All configuration information or engineering data required to accurately provision the line, such as:

a. Channel Code, Network Channel Code, and Signaling as defined in the OBF standard ATIS/OBF-LSR-122.

b. Hotel/Motel Class Mark feature information.

c. Whether there are currently open trouble tickets for each service.

d. Whether a line or circuit is designated for Priority restoration in an emergency.

e. Details on Off Premise Extensions (OPX), including provisioning (2 wire, 4 wire, etc.) and service locations.

f. The Circuit Layout Record for circuits.

g. PVL details such as signaling issues (ground or loop, 2/4 wire, etc.).

h. All translations such as pointing, routing, channelization, or non channelization and conditioning on the lines, including signaling types such as B8ZS.

i. All POTS and DID Guiding Point numbers, with indications as to their relationships to DSS and PRI Service.

j. On Multi-Drop Private Line service include all legs of that circuit, addresses for each leg, and the associated USOC codes and quantities specified.

k. On DSS and PRI service the line code and framing information, as well as the following information defined in the OBF standard ATIS/OBF-LSR-122.

1. DID Digits Out
2. DID Route Index Number
3. DID Trunk Group Number
4. DID Trunk Quantity
5. DID Trunk Identifier
6. DID Telephone Line Identifier

l. Hunt Group Identification and Sequence, as defined in the OBF standard ATIS/OBF-LSR-122.

m. Trunk signaling and digits for Analog DID trunks and signaling and digits for DID provisioned over DSS and PRI.

n. Comments associated with the lines and circuits where such remarks include necessary information for provisioning the line.

o. All Directory Number Hunt information, including circuit numbers and the sequence in the hunt string.

p. All configurations in place for LOD (Line Overflow to Directory Number), CFW (Call Forward), and RCF (Remote Call Forward), here such data is not available through the electronic interface.

q. Customer credit history, including late payment detail and interruptions of service for non-payment.

r. The name of the interconnection company of record.

17.10 *Service Address Validation and View Available Facilities*
The following information shall be included when service address validation and facilities availability are to be provided electronically.

- Additional Lines at address
- Address Response
- Alternate Addresses Number
- Cable pair availability
- Company Code
- Completion Code
- Current service type at this address
- Customer Carrier Name Abbreviation
- DAML currently in
- Date And Time Sent
- Error Description
- Inquiry Activity
- Inquiry Number
- Is it cut through or field
- Line Equipment
- LLOA on file
- Pending orders
- Service Address Building ID
- Service Address Floor Identifier
- Service Address Descriptive Location
- Service Address House Number
- Service Address House Number Suffix
- Service Address House Prefix
- Service Address Locality
- Service Address Room ID
- Service Address State/Province
- Service Address Street Directional
- Service Address Street Name
- Service Address Street Suffix
- Service Address Thoroughfare
- Service Address Zip Code
- Type of interface device at prem
- Wholesale or loop
- Wirecenter/zone
- Working Telephone Number
- # of lines customer wishes to provide

17.10.1 In addition to the information indicated in the above electronic format, ACS-AK shall make the following information available to GCICC either electronically or through a manual method:

a. If there is sufficient cable/pair availability to provide the service

b. The Loop binder post & pair assignments

c. Whether there are loop compression Devices other than DAML installed at the premise

d. The Wire Center, Serving Central Office, and zone (where applicable) for this address

e. If there are currently HDSL/Centrex/ISDN/XDSL services at the address

f. Whether there is available switch line equipment in the customer's serving area

17.11 Calculate Estimated Due Date
The following information shall be provided when the estimated due date is to be provided electronically.

- Company Code
- Completion Code
- Customer Carrier Name Abbreviation
- Date and Time Sent
- Earliest Start Date
- Error Description
- Number of units needed
- Next available Date
- Work Type
- Work Center

17.12 The following format shall be used when the view of the installation calendar is to be provided electronically.

- Available Units
- Completion Code
- Company Code
- Customer Carrier Name Abbreviation
- Date and Time Sent
- Error Description
- Inquiry Date
- Inquiry Response Number
- Service Order Number
- Work Center
- Work Type
- Work Units Assigned

17.13 Firm Order Confirmation
The following information shall be provided when the Firm Order Confirmation data is to be provided electronically.

- Account Number
- Account Telephone Number
- Amount of Time on Job
- Completion Code
- Completion Date
- Customer Carrier Name Abbreviation
- Error Description
- Existing Account Number
- Existing Account Telephone Number
- Effective Billing Date
- Field Visit Indicated
- Installation Material
- Material Cost
- Provider Contact Representative
- Purchase Order Number
- Response Date and Time Sent
- Remarks
- Response Type

- Service Order Number
- Service Order Indicator
- Telephone Number
- Time Indicator
- Version Identification

17.14 Order Completion

The following information shall be provided when the Order Completion data is to be provided electronically.

- Completion Code
- Error Description
- Account Number
- Account Telephone Number
- Customer Carrier Name Abbreviation
- Completion Date
- Existing Account Number
- Existing Account Telephone Number
- Effective Billing Date
- Material Cost
- Installation Material
- Purchase Order Number
- Response Date and Time Sent
- Remarks
- Provider Contact Representative
- Response Type
- Telephone Number
- Amount of Time on Job
- Time Indicator
- Version Identification
- Service Order Number
- Service Order Indicator

17.15 Trouble Ticket Submission/Modification

The following format shall be used when the Trouble Ticket submission/modification data is to be provided electronically.

- Access hours
- City (note some abbreviations)
- Company Name
- Completion Code
- Contact Name and Phone#
- Error Description
- GCICC Activity Log
- GCICC AR#
- Ground Start
- MLH Sequence
- Multiple Line Equip? Y or N
- Phone Number or Circuit ID
- Request Summary Code and Desc
- Tie Cable Pair
- Timestamp ticket entered in Trouble system
- Values: "GCI"
- Values: "Phone" or "Circuit"
- Values: "Y" or "N"
- Wire Center

17.16 Trouble Ticket Inquiry/Response

The following information shall be provided when the Trouble Ticket Inquiry/Response data is to be provided electronically.

- Completion Code
- Date ticket entered current state
- Error Description
- GCICC Activity Log
- GCICC AR#
- MLH Sequence
- Number of tickets in Queue
- Phone Number or Circit ID
- Position in Queue
- Request Summary Code and Desc
- Timestamp ticket entered in TMS

Section 18 Directory

ACS-AK shall provide GCICC directory services at parity with the publisher's treatment of ACS-AK

18.1 Publication

18.1.1 Business Rules
For as long as GCICC and ACS-AK choose to list customer information in a ACS-AK directory or directories, ACS-AK will provide copies of the appropriate front office Business Rules for listing formats for each directory. Examples of Business Rules include:

a. Listing format rules

b. Listing alphabetizing rules

c. Standard abbreviations acceptable for use in listings and addresses

d. Titles and designations

e. A list of all available directories and their Business Office close dates

f. ACS-AK will update these instructions to GCICC as the updates occur.

18.1.2 Listing Data Format
ACS-AK will provide instructions to GCICC regarding data format for submission of listings to ACS-AK. GCICC will submit listings electronically to ACS-AK, grouped by listing name, using such format. ACS-AK will facilitate the insertion of the GCICC listings with the ACS-AK directory contractor selected by ACS-AK and ensure that the quality and accuracy of listings is consistent with GCICC's instructions.

18.1.3 Quarterly Galleys
ACS-AK will provide GCICC's listings to the directory publisher at least once per quarter. ACS-AK will arrange with the directory contractor to provide to GCICC a review galley and exception reports at GCICC's request but no more often than quarterly. ACS-AK will arrange with the directory contractor to provide a combined galley for directory close processes on the same day the publisher provides the combined galley to ACS-AK.

18.1.4 Basic White Page Listings
GCICC residential and business subscribers shall receive one free listing in the alphabetical directory for each primary number. The primary number of each business service will be listed in the classified section at no charge.

18.1.5 Tariffed White Page Listings
In addition to a basic White Pages listing, ACS-AK will provide, at the rates set forth in Attachment II of this Agreement, tariffed White Pages listings (e.g., additional, alternate, foreign and non-published listings) for GCICC to offer for resale to GCICC's customers.

18.1.6 Business Classified Listings
The primary number(s) of each business service will be listed in the classified section at no charge.

18.1.7 Information Pages
ACS-AK agrees to include critical contact information pertaining to GCICC in the "Information Pages" of those of its White Pages directories covering markets in which GCICC is providing or plans to commence providing local exchange service during the publication cycle of such directories. Critical contact information includes GCICC's business office number, repair number, billing information number, and any other information required to comply with applicable regulations. Advertising or purely promotional material shall not be included in the information pages, unless ACS-AK allows advertising or purely promotional material for itself or for other companies to appear in the information pages of the directory. The format, content and appearance of the GCICC information pages will conform to applicable ACS-AK and/or directory publisher guidelines and will be consistent with the format, content, and appearance of information pertaining to all like pages in the directory. The pages shall be of reasonable number, not to exceed 16, unless ACS-AK information pages are allowed to exceed a fixed number of 16. GCICC will not be charged for inclusion of its critical contact information, unless charged at the same rate ACS-AK is charged by the publisher for information pages associated with ACS-AK critical contact information.

18.1.7.1 Information pages, in addition to any information page or portion of an information page containing critical contact information as

described above may be purchased from ACS-AK's directory publisher, subject to applicable directory publisher guidelines and regulatory requirements.

18.1.8 Listing Confidentiality
ACS-AK will accord GCICC customer listing information the same level of confidentiality that ACS-AK accords it own proprietary customer listing information. ACS-AK shall ensure that access to GCICC customer proprietary listing information will be limited solely to those of ACS-AK and ACS-AK's directory publisher's employees, agents and contractors that are directly involved in the preparation of listings, the production and distribution of directories, and the sale of directory advertising. ACS-AK will advise its own employees, agents and contractors and its directory publisher of the existence of this confidentiality obligation and will take appropriate measures to ensure their compliance with this obligation. Notwithstanding any provision herein to the contrary, the furnishing of White Pages proofs to a GCICC that contains customer listings of both ACS-AK and GCICC will not be deemed a violation of this confidentiality provision.

18.1.9 Selling or Licensing Listings
ACS-AK will not sell or license GCICC's customer listing information to any third parties without GCICC's prior written consent, with the exception of other telephone companies in the state of Alaska for the express purpose of publication. All other requests for GCICC customer information will be referred directly to GCICC. The parties agree that the release of GCICC's customer listing to ACS-AK's publisher will not constitute the sale or license of GCICC's customer listing information and therefore will not cause any payment obligation to arise pursuant to this Subsection.

18.1.10 Directory Distribution

18.1.10.1 ACS-AK agrees to provide Directory distribution services to GCICC customers within ACS-AK's service territory at no additional charge to GCICC. ACS-AK represents that the quality, timeliness, and manner of such distribution services will be at parity with those provided to ACS-AK and to other customers.

18.1.10.2 GCICC Residential customers will receive one free directory for each access line in service; GCICC Business customers will receive a minimum of two free directories for each access line.

18.1.10.3 GCICC can place orders for up to 250 additional printed directories (by serving area) and on an as needed basis. If at any point the number of directories beyond the initial distribution to households and businesses and the allocation of 250 (by serving area), requested by GCICC requires additional printing and production costs over the number

of directories allocated to ACS-AK by the publisher, GCICC shall bear the costs of additional printing and publication.

Section 19 Maintenance, Testing, and Repair

ACS-AK shall provide repair, maintenance and testing for all Telecommunications Services and unbundled Network Elements in accordance with the terms and conditions of this Agreement.

19.1 Maintenance

19.1.1 Any change, maintenance, testing or repair
It is agreed between GCICC and ACS-AK that any change, maintenance, testing or repair on any Telecommunications Services or unbundled Network Elements serving GCICC or GCICC customers, or allowing to be served GCICC or GCICC customers, will be performed with a minimum of disruption of service and at parity with that which ACS-AK provides for itself or its other customers.

19.1.2 Maintenance Standards
ACS-AK shall meet maintenance standards for all Telecommunication Services and unbundled network elements provided for or ordered under this agreement.

19.1.3 Emergency Restoration, Maintenance or Repair
ACS-AK shall provide GCICC emergency restoration, maintenance, and repair on the same schedule to that which ACS-AK provides to itself or its other customers.

19.1.4 Spectrum Management of DSL-qualified Loops and Shared Lines
ACS-AK will manage spectrum interference and compatibility for DSL-qualified loops and Shared Lines. At such time as industry standards are developed and adopted, ACS-AK will utilize the industry standards as the criteria for spectrum management. The criteria used to deny a loop to GCICC due to spectrum management issues will be non-discriminatory and will be shared with GCICC for any loops denied as a result of spectrum management concurs.

19.1.5 Dispatch Personnel
ACS-AK shall provide GCICC maintenance dispatch personnel on the same schedule to that which it provides its own subscribers.

19.1.6 SPOC
ACS-AK shall provide a SPOC (Single Point of Contact) for GCICC to report maintenance issues and trouble reports to twenty four (24) hours a day and seven (7) days a week.

19.1.7 Notice of Activity
ACS-AK and GCICC shall give reasonable advance and completion notice to each other of all scheduled and non-scheduled maintenance, network outages,

cable cuts, or other planned network activities, to be performed on any network element, including, without limitation, any hardware, equipment, software, or system, providing service which may potentially impact ACS-AK or GCICC subscribers. The notice will be sufficient to allow each carrier to anticipate customer inquiries.

19.1.8 Loss of Service during Maintenance
GCICC customers who lose service as a result of any unintentional activity by ACS-AK during maintenance activities will have service restored within the same timeframe as ACS-AK restores its own customers. No billing will be incurred by GCICC for these service restorations even if such restorations occur outside of ACS-AK's normal repair hours.

19.1.9 Notice to GCICC
ACS-AK will provide GCICC an electronic method for GCICC to determine if a GCICC customer trouble report is associated with ACS-AK maintenance activity.

19.1.9.1 Upon completion of the work, ACS-AK shall inform the GCICC SPOC real time of the actual completion date and time immediately upon such completion.

19.1.10 Testing

19.1.10.1 ACS-AK shall provide GCICC with access to the Harris Line Test System that will allow GCICC to test all local service elements connected to a GCICC wholesale customer (resold services) in a manner equal to that with which ACS-AK provides to itself.

19.1.10.2 Within 8 business hours of GCICC's request for scheduled cooperative maintenance testing, ACS-AK shall schedule such testing with GCICC (including trouble shooting to isolate any problems) to test Network Elements purchased by GCICC in order to identify any problems.

19.1.11 Test Results
GCICC and ACS-AK may share test results upon request as an aid to diagnosing troubles.

19.1.12 Testing Resold Services
ACS-AK shall perform all Telecommunication Services testing for GCICC wholesale customers in a manner consistent with that which ACS-AK provides to its own customers. GCICC may request line testing without the necessity of opening a trouble ticket with ACS-AK when the real time electronic interface is not available or operational that would allow GCICC to test the line for itself. ACS-AK will provide the test results to GCICC immediately.

19.1.13 Shared Line Testing
ACS-AK will provide GCICC test access to all shared lines including access to the 2W Analog line (nominal 0 – 4 kHz spectrum).

19.2 Repair

19.2.1 ACS-AK will provide GCICC with a real time Electronic Interface that will allow GCICC to open, check the current status, modify, cancel or close trouble tickets for GCICC customers in a manner equivalent to that with which ACS-AK provides to itself. As ACS-AK modifies, updates, or closes a ticket, GCICC will receive an immediate electronic notice of change.

19.2.2 Upon establishment of the Electronic Interface, ACS-AK shall notify GCICC via such electronic interface immediately upon completion of trouble report. The report shall not be considered closed until such notification is made.

19.2.3 GCICC shall also submit trouble tickets to ACS-AK via, fax or email when an electronic interface is not provided or available.

19.2.4 Prioritization
GCICC may prioritize the scheduling of repair dispatches for GCICC customers within the normal course of ACS-AK's repair schedule.

19.2.5 Misdirected Repair Calls
On any misdirected repair calls to either party, the customer requesting repair service will be provided with the correct repair number and an offer to transfer the customer to the correct number will be given.

19.3 Trouble Reporting and Dispatch Priorities

The priority of the trouble ticket is set by the contents of the Trouble Type and Service Use fields. The priority can be changed during the life of the ticket with the changes in the circumstances of the trouble ticket. The Priorities range from 86, and 1-10, with 86 considered a "Hot" trouble ticket that needs immediate attention. The priorities 1-10 are rated with 1 being the most urgent and 10 the least urgent. All Payphone troubles are given a Priority 1 rating.

19.3.1 The Priority explanations are found below:

Priority 1: Out of Service conditions for critical business services, health and safety.

a. ACS-AK Error – The customer has reported that ACS-AK has been working in their area and has caused a service outage. The Call Taker should verify that indeed ACS-AK could have caused the outage.

b. Centrex – Centrex outage, usually involves a business service.

c. Critical Business – The service is critical to the operation of a business.

d. IDSL – The service usually critical to the operation of a business.

e. Intermittent – The intermittent nature of the problem may cause a service to be unusable. The intermittent problem may need to be responded to quickly to catch the problem as it is occurring.

f. ISDN – The service is usually critical to the operation of a business.

g. Medical – The interruption of service could cause a delay in receiving medical treatment.

h. Repeat – This is any problem that has been reported and the trouble ticket closed in the last 60 days.

i. Safety – A safety issue with the service interruption, causing risk to life, health, property.

j. System Down – A Key or PBX system is down and needs attention.

Priority 2: Out of service or service affecting conditions for lines that, while urgent, are not considered a top priority.

a. Critical Business – The critical business service is affected but not out of service.

b. Critical Residential – The only line for a residential customer.

c. Repeat – A service affecting repeat trouble, not out of service.

d. The following are Programming Options that are reported as out of service or working improperly. These options are considered Priority 2.

i. Call Forward

ii. Call Waiting

iii. Continuos Redial

iv. Intercom

v. Last Call Return

vi. Last Number Redial

vii. Line Block

viii. Message Waiting Visual

ix. Remote Call Forward

x. Restrict Sent Paid

xi. Speed Calling

xii. Toll Restriction

xiii. Voice Mail

xiv. 900 Number Toll Restriction

Priority 3: Installs for critical business services.

Priority 4: Installs for critical residential services.

Priority 5: Extensions or troubles on a service that do not warrant a higher priority.

a. Customer Caused – Troubles caused by the customer, such as, pulling the jack off a wall.

b. Key Extension – A Key extension that is working improperly or out of service.

c. Medical – A service used for medical purposes but is the service slightly affected.

d. Non-Critical Business – A non-critical business service that is working improperly or out of service.

e. PBX Extension – A PBX extension that is working improperly or out of service.

f. Straight Line Extension – A straight line extension that is working improperly or out of service.

Priority 6: Installs for non-critical business.

Priority 7: Non-critical residential services or customer caused problems that are out of service or cause service affecting conditions.

a. Customer Caused – The customer has created a condition on a non-critical service.

b. Non-Critical Residential: The residential service is considered non-critical. i.e. teen line, modem line.

c. Customer Requested Testing – Customer requested testing of their service.

d. Intermittent – Modem line with intermittent problems.

e. Critical Residential – Critical residential service with minor service affecting problem.

Priority 8: Non-critical residential install.

Priority 9: The lowest priority service affecting trouble reports, i.e. radio others on line, noise and static.

a. Customer Requested Testing – Customer requested testing of their service.

b. Other - Miscellaneous trouble report.

c. Customer Caused – The customer caused a problem that created a low priority trouble report.

d. Non-Critical Business – A minor service affecting problem on a non-critical business service.

e. Non-Critical Residential – A minor service affecting problem on a non-critical residential service.

f. Intermittent – A minor intermittent service affecting problem on the service.

Priority 10: The lowest priority, is used for relocating SIDs and drops, burying drops, tree trimming, and customer inquiry calls.

PART C – ATTACHMENT V

COLLOCATION

Section 1 Introduction

1.1 This Attachment sets forth the requirements for collocation. Collocation is all forms of collocation including physical collocation, adjacent collocation, and virtual collocation. There will be a collocation application fee per collocation site requested by GCICC. The fee is to cover ACS-AK for expenses in processing the application.

1.1.1 ACS-AK will provide GCICC unrestricted access to any collocation space. This is meant to include 24 hours a day by 7 days a week access. GCICC shall call and notify ACS-AK's NOC when GCICC determines access to ACS-AK facilities is necessary.

1.1.2 ACS-AK will not disconnect AC or DC power or other support service (i.e., HVAC) (unless a major emergency is imminent or in process) without reasonable notification to GCICC.

Section 2 General Descriptions

2.1 Physical collocation enables GCICC to place, within or upon ACS-AK's premises or points, equipment necessary, required or indispensable for interconnection to ACS-AK's network facilities for the transmission and routing of telephone exchange service, exchange access service, or both, and for access to ACS-AK's unbundled network elements. GCICC will not install any equipment used solely for switching or solely for providing enhanced services. ACS-AK will provide for physical collocation within or upon ACS-AK's premises in space selected by ACS-AK, except where it is not feasible for technical reasons or because of space limitations.

2.1.1 In addition to the floor space, ACS-AK will provide fire suppression, AC convenience outlets, -48 VDC power and battery backup (if requested and capacity is available), heating, air conditioning and other environmental supports and generator back-up to GCICC's collocation space. ACS-AK's obligation is limited to providing such services in substantially the same fashion as it provides such services to itself in the premises in which the collocation space is located. The expense, if any, of extending these services to GCICC's collocation space will be included in the cost proposal for space preparation.

2.1.2 ACS-AK will provide two separate building entrance facility points to each ACS-AK premise or point where there are at least two building entrance

facility points existing and available for ACS-AK's facilities to the premise or point.

2.2 Adjacent collocation enables GCICC, where space is legitimately exhausted in particular ACS-AK premises, to collocate in adjacent controlled environmental vaults or similar structures to the extent technically feasible. ACS-AK shall permit GCICC to construct or otherwise procure such a structure subject only to reasonable safety and maintenance requirements. ACS-AK shall provide –48VDC power and battery backup (if requested and capacity is available), and physical collocation services and facilities, subject to the same nondiscrimination requirements as applicable to any other physical collocation arrangement. ACS-AK will permit GCICC to place its own equipment, including, but not limited to, copper cables, coaxial cables, fiber cables, in adjacent facilities constructed by either ACS-AK or GCICC.

2.2.1 ACS-AK will provide two separate facility entrance points to each ACS-AK premise or point where there are at least two facility entrance points existing and available for ACS-AK's facilities to the premise or point.

2.3 Virtual collocation enables GCICC to designate specific equipment, dedicated to GCICC's use, to be installed, maintained and repaired by ACS-AK within or upon ACS-AK's premises in space selected by ACS-AK, necessary, required or indispensable for interconnection to ACS-AK's network facilities for the transmission and routing of telephone exchange service, exchange access service, or both, and for access to ACS-AK's unbundled network elements. GCICC will not designate any equipment used solely for switching or solely for providing enhanced services.

2.3.1 In addition to the floor space, ACS-AK will provide fire suppression, AC convenience outlets, -48 VDC power and battery backup (if requested and capacity is available), heating, air conditioning and other environmental supports and generator back-up to GCICC's collocation space. ACS-AK's obligation is limited to providing such services in substantially the same fashion as it provides such services to itself in the premises in which the collocation space is located. The expense, if any, of extending these services to GCICC's collocation space will be included in the cost proposal for space preparation.

2.3.2 ACS-AK will provide two separate facility entrance points to each ACS-AK premise or point where there are at least two facility entrance points existing and available for ACS-AK's facilities to the premise or point.

2.4 GCICC will restrict the submission of detailed site requirements such that detailed site requirements pending ACS-AK approval do not exceed five (5) locations irrespective of areas in the state at any given time.

Section 3 Collocation Application Process

3.1 Physical Collocation

3.1.1 Request for Collocation. A request for physical collocation must be submitted to ACS-AK in writing. At a minimum, the request must include: a) identification of the premise or point where collocation is requested, b) floor space requirements, c) distribution frame space requirements, d) building entrance facility requirements, e) power and ground requirements. f) type of equipment to be collocated and its intended use and g) date GCICC requests for occupancy of collocated space. A site survey may be included with the request.

3.1.2 Within 5 business days of receipt of GCICC's request for collocation, ACS-AK and GCICC will assign single points of contact ("SPOC") for the collocation request. The SPOCs will work cooperatively and ACS-AK will provide GCICC with access to engineering and facility records necessary to properly design collocation space, equipment layout, power systems, cable racks, cabling, etc.

3.2 Preliminary Site Survey

If ACS-AK determines that a site survey is necessary to determine feasibility and/or approval of GCICC's request, ACS-AK shall notify GCICC and afford GCICC the opportunity to be present at the survey. The preliminary site survey must be completed within 15 business days of GCICC's request for collocation.

3.3 Approval/Rejection of Request

Within 5 business days of the preliminary site survey, or no more than 20 business days from receipt of GCICC's request for collocation, ACS-AK will approve or reject GCICC's request. If the request is rejected, the reason(s) for rejection must be included. If ACS-AK fails to provide the reason(s) for rejection or if GCICC disagrees with the reason(s) for rejection or finds it unreasonable, ACS-AK and GCICC will negotiate a mutually acceptable solution. At GCICC's election, ACS-AK shall escort GCICC representatives on a tour of the premise or point at issue. If a mutually acceptable solution cannot be reached within 15 business days of ACS-AK's notice of rejection, GCICC may request the matter be resolved through Dispute Resolution as set forth in this Agreement.

3.3.1 Collocation by type has been requested and is currently approved under section 3.3 at the following locations:

I. Assumes UNE Switching (where GR303, DSS and PRI interfaces and power is available) purchased from ACS-AK.

Physical Collocation Sites	loor Space Req'd (Sq. Ft.)	pprox. Space Dimensions (Ft.)	Frame Space Req'd (Blocks)	ntrance Facilities Req'd (4" Ducts)	23" Rack Space Req'd	8VDC Power Req'd (Amps)
reenwood	162	9 x 18	12	1	1	60
. Wainwright	162	9 x 18	10	1	1	0
elson AFB	162	9 x 18	10	1	1	45
orth Pole	162	9 x 18	10	1	1	0
neau Main	162	9 x 18	12	1	1	0

Note 1: Rack space is actually in the ACS-AK equipment area and not part of the floor space requirement. It is most likely that GCICC will not need a full rack, but will need space for DSX panels.

Note 2: Floor space and power requirements are estimates. Actual requirements to be determined when detailed site requirements are submitted and approved under section 3.5.

II. Assumes UNE switching not purchased from ACS-AK.

Physical Collocation Sites	loor Space Req'd (Sq. Ft.)	pprox. Space Dimensions (Ft.)	rame Space Req'd (Blocks)	ntrance Facilities Req'd (4" Ducts)	23" Rack Space Req'd	8VDC Power Req'd (Amps)
reenwood	300-400	18 x 22	42	2	1	200
. Wainwright	350-400	18 x 22	9	2	1	0
elson AFB	400-450	18 x 25	15	3	1	45
orth Pole	162	9 x 18	10	1	1	0
neau Main	340-450	18 x 25	30	4	1	0

Note 1: Rack space is actually in the ACS-AK equipment area and not part of the floor space requirement.

Note 2: Floor space and power requirements are estimates. Actual requirements to be determined when detailed site requirements are submitted and approved under section

3.4 Pre-Construction Site Survey

Subsequent to ACS-AK's approval of the request for collocation, GCICC may request a site survey to gather information necessary to develop detailed site requirements. ACS-AK shall schedule the site survey within 5 business days of GCICC's request. The scheduled time shall allow for completion of the survey within 15 business days of the request.

3.5 Detailed Site Requirements

Subsequent to pre-construction surveys, GCICC will submit detailed site requirements to ACS-AK for review, cost development and approval.

3.6 Approval of Detailed Site Requirements

ACS-AK shall respond to GCICC within 10 business days of receipt of GCICC's detailed site requirements with ACS-AK's approval or rejection of the detailed site requirements. If ACS-AK rejects the detailed site requirements, the reason(s) for rejection will be provided. If the reason(s) for rejection are reasonable, GCICC will modify the detailed site requirements accordingly and resubmit to ACS-AK. If GCICC finds the reason(s) for rejection unreasonable, ACS-AK and GCICC will negotiate a mutually acceptable solution. If a mutually acceptable solution cannot be reached within 15 business days of ACS-AK's notice of rejection, GCICC may request the matter be resolved through Dispute Resolution as set forth in this Agreement.

3.7 Cost Proposals and Acceptance

3.7.1 ACS-AK shall, within 20 business days of approving GCICC's detailed site requirements, provide a cost estimate and implementation schedule for any work to be performed by ACS-AK. The cost estimate will include an itemized list of all labor, materials, equipment, permits, and any other costs for which GCICC will be responsible.

3.7.2 Any work to be performed inside the collocation space, where such space is enclosed by a cage or other physical separation, may be performed by GCICC employees or GCICC contractors. Any work associated with the construction or preparation of the collocation space and any work to be performed on ACS-AK property outside the caged or physically separate collocation space must be performed by ACS-AK.

3.8 Implementation Schedule

3.8.1 GCICC shall, within 20 business days of receipt, review ACS-AK's cost proposal and implementation schedule. If found to be reasonable, GCICC will provide ACS-AK with written approval of the cost estimate and implementation schedule and authorize ACS-AK to perform the work. If GCICC finds any of the costs or the schedule to be unreasonable, GCICC shall notify ACS-AK accordingly, identify those specific issues that it finds to unreasonable, and give ACS-AK the opportunity to substantiate the costs or schedule to GCICC's satisfaction. If ACS-AK and GCICC cannot reach agreement on the proposal, GCICC may request that ACS-AK obtain competitive bids from ACS-AK-approved contractors for the work. ACS-AK will share the bids with GCICC and the parties will mutually agree to whom to award the bid.

3.8.2 GCICC and ACS-AK will complete an acceptance walk through of those portions of the collocation arrangement constructed by ACS-AK. Any exceptions noted during this acceptance walk through which constitutes a material change from the mutually agreed upon collocation request and detailed site requirements shall be corrected within a reasonable time.

3.9 Adjacent Collocation

3.9.1 Request for Collocation

3.9.1.1 A request for adjacent collocation must be submitted to ACS-AK in writing. At a minimum, the request must include:

a. identification of the premise or point where collocation is requested

b. ground space requirements if on ACS-AK property

c. distribution frame space requirements

d. building entrance facility requirements

e. power and ground requirements

f. type of equipment to be collocated and its intended use and

g. date GCICC requests for occupancy of collocated space. A site survey may be included with the request.

3.9.1.2 Within 5 business days of receipt of GCICC's request for collocation, ACS-AK and GCICC will assign a SPOC for the collocation request. The SPOCs will work cooperatively and ACS-AK will provide GCICC with access to engineering and facility records necessary to properly design collocation space, equipment layout, power systems, cable racks, cabling, etc.

3.9.1.3 Collocation by type has been requested and is currently approved under section 3.9.3 at the following locations:

I. Assumes UNE Switching (where GR303, DSS and PRI interfaces and power is available) purchased from ACS-AK.

Adjacent Collocation Sites	oor Space Req'd (Sq. Ft.)	pprox. Space Dimensions (Ft.)	Frame Space Req'd (Blocks)	Entrance Facilities Req'd (4" Ducts)	23" Rack Space Req'd	8VDC Power Req'd (Amps)
lobe	ote 1	ote 1	18	1	1	0
erling	ote 1	ote 1	8	1	1	0
an Horn	ote 1	ote 1	3	1	1	0
ale Road	ote 1	ote 1	6	1	1	0
mon Creek	ote 1	ote 1	8	1	1	0
ake Bay	ote 1	ote 1	6	1	1	30

Note 1: Equipment located in building space not leased from ACS-AK or in right-of-way/ easement.

Note 2: Rack space is actually in the ACS-AK equipment area and not part of the floor space requirement. It is most likely that GCICC will not need a full rack, but will need space for DSX panels.

Note 3: Floor space and power requirements are estimates. Actual requirements to be determined when detailed site requirements are submitted and approved under section 3.9.5.

II. Assumes UNE switching not purchased from ACS-AK.

Adjacent Collocation Sites	oor Space Req'd (Sq. Ft.)	pprox. Space Dimensions (Ft.)	Frame Space Req'd (Blocks)	Entrance Facilities Req'd (4" Ducts)	23" Rack Space Req'd	8VDC Power Req'd (Amps)
lobe	ote 1	ote 1	75	6	1	0
erling	ote 1	ote 1	30	2	1	0
an Horn	ote 1	ote 1	3	1	1	0
ale Road	ote 1	ote 1	5	1	1	0
mon Creek	ote 1	ote 1	15	2	1	0
ake Bay	ote 1	ote 1	12	2	1	30

Note 1: Equipment located in building space not leased from ACS-AK or in right-of-way or easement.

Note 2: Rack space is actually in the ACS-AK equipment area and not part of the floor space requirement.

Note 3: Floor space and power requirements are estimates. Actual requirements to be determined when detailed site requirements are submitted and approved under section 3.9.5.

3.9.2 Preliminary Site Survey

If ACS-AK determines that a site survey is necessary to determine feasibility and/or approval of GCICC's request, ACS-AK shall notify GCICC and afford GCICC the opportunity to be present at the survey. The preliminary site survey must be completed within 15 business days of GCICC's request for collocation.

3.9.3 Approval/Rejection of Request

Within 5 business days of the preliminary site survey, or no more than 20 business days from receipt of GCICC's request for collocation, ACS-AK will approve or reject GCICC's request. If the request is rejected, the reason(s) for rejection must be included. If ACS-AK fails to provide the reason(s) for rejection or if GCICC disagrees with the reason(s) for rejection or finds it unreasonable, ACS-AK and GCICC will negotiate a mutually acceptable solution. At GCICC's election, ACS-AK shall escort GCICC representatives on a tour of the premise or point at issue. If a mutually acceptable solution cannot be reached within 15 business days of ACS-AK's notice of rejection, GCICC may request the matter be resolved through Dispute Resolution as set forth in this Agreement.

3.9.4 Pre-Construction Site Survey

Subsequent to ACS-AK's approval of the request for collocation, GCICC may request a site survey to gather information necessary to develop detailed site requirements. ACS-AK shall schedule the site survey within 5 business days of GCICC's request. The scheduled time shall allow for completion of the survey within 15 business days of the request.

3.9.5 Detailed Site Requirements

Subsequent to pre-construction surveys, GCICC will submit detailed site requirements to ACS-AK for review, cost development and approval.

3.9.6 Approval of Detailed Site Requirements

ACS-AK shall respond to GCICC within 10 business days of receipt of GCICC's detailed site requirements with ACS-AK's approval or rejection of the detailed site requirements. If ACS-AK rejects the detailed site requirements, the reason(s) for rejection will be provided. If the reason(s) for rejection are reasonable, GCICC will modify the detailed site requirements accordingly and resubmit to ACS-AK. If GCICC finds the reason(s) for rejection unreasonable, ACS-AK and GCICC will negotiate a mutually acceptable solution. If a mutually acceptable solution cannot be reached within fifteen (15) business days of ACS-AK's notice of rejection, GCICC may request the matter be resolved through Dispute Resolution as set forth in this Agreement.

3.9.7 Cost Proposals and Acceptance

3.9.7.1 ACS-AK shall, within 20 business days of approving GCICC's detailed site requirements, provide a cost estimate and implementation schedule for any work to be performed by ACS-AK. The cost estimate will include an itemized list of all labor, materials, equipment, permits, and any other costs for which GCICC will be responsible.

3.9.7.2 Any work to be performed inside the collocation space, where such space is enclosed by a cage or other physical separation, may be performed by GCICC employees or GCICC contractors. Any work associated with the construction or preparation of the collocation space and any work to be performed on ACS-AK property outside the collocation space must be performed by ACS-AK.

3.9.8 Implementation Schedule

3.9.8.1 GCICC shall, within 20 business days of receipt, review ACS-AK's cost proposal and implementation schedule. If GCICC finds any of the costs or the schedule to be unreasonable, GCICC shall notify ACS-AK accordingly, identify those specific issues that it finds to unreasonable, and give ACS-AK the opportunity to substantiate the costs or schedule to GCICC's satisfaction. If ACS-AK and GCICC cannot reach agreement on the proposal, GCICC may request that ACS-AK obtain competitive bids from ACS-AK-approved contractors for the work. ACS-AK will share the bids with GCICC and the parties will mutually agree to whom to award the bid.

3.9.8.2 GCICC and ACS-AK will complete an acceptance walk through of those portions of the collocation arrangement constructed by ACS-AK. Any exceptions noted during this acceptance walk through which constitutes a material change from the mutually agreed upon collocation request and detailed site requirements shall be corrected within a reasonable time.

3.10 Virtual Collocation

3.10.1 Request for Collocation

3.10.1.1 A request for virtual collocation must be submitted to ACS-AK in writing. At a minimum, the request must include:

a. identification of the premise or point where collocation is requested,

b. floor space requirements,

c. distribution frame space requirements,

d. building entrance facility requirements, and

e. power and ground requirements

f. type of equipment GCICC requests ACS-AK to install and its intended use and

g. date GCICC requests ACS-AK to complete the installation A site survey may be included with the request.

3.10.1.2 Within five (5) business days of receipt of GCICC's request for collocation, ACS-AK and GCICC will assign SPOCs for the collocation request. The SPOCs will work cooperatively and ACS-AK will provide GCICC with access to engineering and facility records necessary to properly design collocation space, equipment layout, power systems, cable racks, cabling, etc.

3.10.2 Preliminary Site Survey
If ACS-AK determines that a site survey is necessary to determine feasibility and/or approval of GCICC's request, ACS-AK shall notify GCICC and afford GCICC the opportunity to be present at the survey. The preliminary site survey must be completed within 15 business days of GCICC's request for collocation.

3.10.3 Approval/Rejection of Request
Within five (5) business days of the preliminary site survey, or no more than twenty (20) business days from receipt of GCICC's request for collocation, ACS-AK will approve or reject GCICC's request. If the request is rejected, the reason(s) for rejection must be included. If ACS-AK fails to provide the reason(s) for rejection or if GCICC disagrees with the reason(s) for rejection or finds it unreasonable, ACS-AK and GCICC will negotiate a mutually acceptable solution. At GCICC's election, ACS-AK shall escort GCICC representatives on a tour of the premise or point at issue. If a mutually acceptable solution cannot be reached within fifteen (15) business days of ACS-AK's notice of rejection, GCICC may request the matter be resolved through Dispute Resolution as set forth in this Agreement.

3.10.4 Pre-Construction Site Survey
Subsequent to ACS-AK's approval of the request for collocation, GCICC may request a site survey to gather information necessary to develop detailed site requirements. ACS-AK shall schedule the site survey within five (5) business days of GCICC's request. The scheduled time shall allow for completion of the survey within fifteen (15) business days of the request.

3.10.5 Detailed Site Requirements
Subsequent to pre-construction surveys, GCICC will submit detailed site requirements to ACS-AK for review, cost development and approval.

3.10.6 Approval of Detailed Site Requirements
ACS-AK shall respond to GCICC within ten (10) business days of receipt of GCICC's detailed site requirements with ACS-AK's approval or rejection of the detailed site requirements. If ACS-AK rejects the detailed site requirements, the reason(s) for rejection will be provided. If the reason(s) for rejection are reasonable, GCICC will modify the detailed site requirements accordingly and resubmit to ACS-AK. If GCICC finds the reason(s) for rejection unreasonable, ACS-AK and GCICC will negotiate a mutually acceptable solution. If a mutually acceptable solution cannot be reached within 15 business days of ACS-AK's notice of rejection, GCICC may request the matter be resolved through Dispute Resolution as set forth in this Agreement.

3.10.7 Cost Proposals and Acceptance

3.10.7.1 ACS-AK shall, within 20 business days of approving GCICC's detailed site requirements, provide a cost estimate and implementation schedule for all work to be performed by ACS-AK. The cost estimate will include an itemized list of all labor, materials, equipment, permits, maintenance, repair and any other costs for which GCICC will be responsible.

3.10.7.2 Any work to be performed utilizing virtual collocation shall be performed by ACS-AK.

3.10.8 Implementation Schedule

3.10.8.1 GCICC shall, within 20 business days of receipt, review ACS-AK's cost proposal and implementation schedule. If found to be reasonable, GCICC will provide ACS-AK with written approval of the cost estimate and implementation schedule and authorize ACS-AK to perform the work. If GCICC finds any of the costs or the schedule to be unreasonable, GCICC shall notify ACS-AK accordingly, identify those specific issues that it finds to unreasonable, and give ACS-AK the opportunity to substantiate the costs or schedule to GCICC's satisfaction. If ACS-AK and GCICC cannot reach agreement on the proposal, GCICC may request that ACS-AK obtain competitive bids from ACS-AK-approved contractors for the work. ACS-AK will share the bids with GCICC and the parties will mutually agree to whom to award the bid.

3.10.8.2 GCICC and ACS-AK will complete an acceptance walk through of those portions of the collocation arrangement constructed by ACS-AK. Any exceptions noted during this acceptance walk through

which constitutes a material change from the mutually agreed upon collocation request and detailed site requirements shall be corrected within a reasonable time after the walk through by ACS-AK.

3.11 Augmentation of Collocation Space
Subject to Section 6 of this Attachment, should GCICC need to augment floor space, distribution frame space, building entrance facilities, cabling, cable rack, equipment racks, power, ground, or any other facet of collocation at a premise or point where GCICC is already collocated, the augmentation request and process will be the same as the collocation application process for the type of collocation at issue.

3.12 Forecasted Space Requirements
Subject to Section 6 of the Attachment, annually, no later than June 30th, GCICC will inform ACS-AK of its space requirements at ACS-AK premises or points where space has not been available. ACS-AK shall take GCICC's forecasted space requirements into account when planning renovations of existing facilities or construction or leasing of new facilities in/at the premises or points at issue. The forecasted requirements shall remain in effect for one year unless otherwise cancelled by GCICC.

Section 4 Rules and Regulations

4.1 Safety and Engineering Standards

4.1.1 ACS-AK may not object to the collocation of equipment on the grounds that the equipment does not comply with safety or engineering standards that are more stringent than the safety or engineering standards that ACS-AK applies to its own equipment.

4.1.2 ACS-AK may not object to the collocation of equipment on the ground that the equipment fails to comply with National Equipment and Building Specifications performance standards.

4.1.3 If ACS-AK denies collocation of a competitor's equipment, citing safety standards, ACS-AK must provide to GCICC within five (5) business days of the denial a list of all like equipment that ACS-AK locates within the premises in question, together with an affidavit attesting that all of that equipment meets or exceeds the safety standard that ACS-AK contends GCICC's equipment fails to meet.

4.2 Security

4.2.1 ACS-AK may require all reasonable security arrangements not prescribed by law to protect its equipment and ensure network reliability. ACS-AK may only impose security arrangements that are as stringent as the security arrangements that ACS-AK maintains at its own premises for its own employees or authorized contractors.

4.2.2 ACS-AK will allow GCICC access to its collocated equipment 24 hours a day, seven days a week, without requiring either a security escort of any kind or delaying GCICC's employees', agents', or contractors' entry into ACS-AK's premises. Where available, ACS-AK shall allow GCICC's employees, agents and contractors unescorted access to restrooms with the exception of those restrooms that are located inside ACS-AK's switchrooms. Access to restrooms inside ACS-AK's switchrooms will require an escort.

4.2.3 GCICC's employees, agents and contractors must comply with the policies and practices of ACS-AK pertaining to fire and safety.

4.2.4 Reasonable security measures that ACS-AK may adopt include:

a. installing security cameras or other monitoring systems; or

b. requiring GCICC personnel to use badges with computerized tracking systems; or

c. requiring GCICC personnel to undergo the same level of security training, or its equivalent, that ACS-AK's own employees, or third party contractors providing similar functions, must undergo; provided, however, that ACS-AK may not require GCICC personnel to receive such training from ACS-AK itself, but must provide information to GCICC on the specific type of training required so GCICC personnel can conduct their own training.

4.2.5 Within thirty (30) days of the Approval date, ACS-AK shall provide contact names and telephone numbers for the personnel responsible for security, building and grounds, and environmental and safety issues.

4.2.6 GCICC will supply to ACS-AK, and update as changes occur, a list of its employees and approved vendors who require access to the collocation space and common areas of the premises.

4.3 Construction and Scheduling

4.3.1 Before beginning delivery, installation, replacement or removal work for equipment and/or facilities located within the collocation space, GCICC must obtain ACS-AK's written approval of GCICC's proposed scheduling of the work in order to coordinate use of temporary staging areas, freight elevators, and other building facilities. ACS-AK may request additional information before granting approval and may require scheduling changes; however, approval will not be unreasonably withheld.

4.3.2 ACS-AK has the right to inspect GCICC's completed installation of equipment and facilities occupying a collocation space and associated building entrance facilities. ACS-AK also may make subsequent and periodic inspections of the GCICC's equipment and facilities. These subsequent periodic inspections will be made no more than once per month, except when they are required by public safety, fire or insurance agencies or in cases of emergencies. If GCICC is found to be in non-compliance with the terms and conditions of this Agreement, GCICC must modify its installation to achieve compliance. ACS-AK will notify GCICC in writing two (2) days in advance of ACS-AK initiated inspections, except in the case of emergencies, and GCICC shall have the right to be present at the time of the inspection.

4.3.3 In the event that an emergency or agency request necessitates an inspection, ACS-AK will, as soon as reasonably possible after the emergency or agency inspection request, notify GCICC of the emergency or agency inspection request and the nature of the emergency or agency request. GCICC shall have the right to be present at the time the outside agency inspection takes place. ACS-AK will, where practical, inform GCICC by telephone of any emergency-related activity that ACS-AK or its subcontractors may be performing in the collocation space.

> **4.3.3.1** GCICC shall provide a written logbook for ACS-AK's employees or contractors to sign when entering GCICC's physical collocation space.

4.3.4 With ACS-AK's prior written consent, GCICC shall be permitted to use a portion of the ACS-AK premises, central office and loading areas, if available, on a temporary basis during GCICC's equipment installation work in the collocation space. A GCICC representative must sign for all equipment deliveries requiring signatures of receipts. No ACS-AK employee will accept delivery of GCICC's equipment. GCICC is responsible for protecting ACS-AK's equipment, walls, and flooring within the staging area and along the staging route. GCICC will meet all ACS-AK fire, safety and environmental requirements. All temporary staging areas will be vacated and delivered to ACS-AK in a broom-clean condition upon completion of the installation work. ACS-AK may assess a cleaning charge for failure to comply with this obligation.

4.3.5 GCICC's employees, agents and/or contractors may only work on, modify, or have access to GCICC's equipment or facilities.

4.3.6 ACS-AK shall provide GCICC with the escalation process (names, telephone numbers, and the escalation order) for any disputes or problems that might arise pursuant to GCICC's collocation.

4.4 Conditions on Use of Space

4.4.1 Neither the use and occupancy of space in which GCICC situates its equipment in ACS-AK premises or points, nor the payments made by GCICC for the use of space in ACS-AK's premises or points, shall create or vest, or is intended to create or vest, in GCICC (or in any other person) any property right or interest of any nature in any part of ACS-AK's premises.

4.4.2 GCICC shall, at GCICC's expense, fully, promptly, and consistently comply with all statutes, ordinances, rules, regulations, orders, and requirements in effect during the term of this Agreement. GCICC shall not use or permit the use of the collocation space in any manner that will create waste, create a nuisance, or create a fire hazard. GCICC will not operate any equipment that causes interference with telecommunications facilities of ACS-AK or others in the building.

4.4.3 ACS-AK shall notify GCICC immediately of any interference with telecommunications facilities of ACS-AK or others believed to be caused by GCICC's equipment. GCICC and ACS-AK will, within 24 hours of notification by ACS-AK, cooperatively work to expeditiously determine if the reported interference is caused by GCICC's equipment and, if so, eliminate the cause of the interference.

4.4.4 GCICC's use of collocation space within or upon ACS-AK's premises or points is subject to any restriction or agreement which governs ACS-AK's use of the premises or points, such as zoning restrictions, restrictive covenants in deeds or limitations in leases between ACS-AK and the owner of the facility.

4.4.5 ACS-AK shall not be responsible for

a. GCICC's personal property, furniture and trade fixtures located in the collocation space, or

b. damages caused by the negligent or intentional act or omissions of GCICC, GCICC's agents, contractors, employees or invitees. ACS-AK shall have no obligation to make repairs until a reasonable time after receipt of written notice from GCICC of the need for such repairs.

4.4.6 Upon demand of ACS-AK, GCICC shall reimburse ACS-AK for the cost of all repairs or maintenance that result from the misuse or neglect of the collocation space by GCICC, its agents, contractors, invitees or employees. Upon termination of GCICC's use and occupation of collocation space, GCICC shall surrender the space occupied to ACS-AK in the same condition as received, broom clean, ordinary wear and tear excepted, unless otherwise agreed to in writing.

4.4.7 Except for installation of equipment, GCICC shall not make any alterations, improvements, or additions in, on, or about the occupied collocation space except as specifically permitted in writing by ACS-AK.

4.4.7.1 GCICC may, with the prior written consent of ACS-AK, have the right to provide additional fire protection systems within the collocation space; provided, however, that GCICC may not install or use sprinklers or carbon dioxide fire suppression systems within the building or the collocation space. If any governmental bureau, department or organization or ACS-AK's insurance carrier requires that changes, modifications, or alterations be made to the fire protection system, or that additional stand alone fire extinguishing, detection or protection devices be supplied within the collocation space, such changes, modifications or additions shall be made by GCICC at its expense, following review and written approval by ACS-AK prior to any work being done. If any governmental bureau, department or organization or ACS-AK's insurance carrier requires that changes or modifications be made to the fire protection system or that additional stand alone fire extinguishing, detection or protection devices be supplied within that portion of the building in which the collocation space is generally located, such changes, modifications, or additions shall be made by ACS-AK and GCICC shall reimburse ACS-AK for the cost thereof in the same proportion as the square footage of the collocation space is to the total square footage of the affected portion of the building.

4.4.8 GCICC shall promptly pay all claims for labor or material furnished to or for GCICC, for which claims are or may be secured by any construction or similar lien against ACS-AK's premises. GCICC shall not suffer or permit any lien to attach to the interests of ACS-AK in the premises.

4.4.9 Any additions, non-trade fixtures, and improvements shall become the property of ACS-AK and remain upon and be surrendered with the collocation space at the expiration of GCICC's occupancy; provided, however, that ACS-AK may require GCICC to remove any additions and not-trade fixtures made by or for GCICC and to repair any damages caused by such a removal. GCICC's equipment, personal property, furniture, and trade fixtures shall remain the property of GCICC and may be removed by GCICC provided, however, that if GCICC has not removed such items from the collocation space within 10 days after the termination of GCICC's use and occupancy of such space, then ACS-AK may elect to retain the same as abandoned property. GCICC shall reimburse ACS-AK for disposal of such abandoned property.

4.4.10 GCICC will comply with ACS-AK's Central Office Policies and Procedures as may be amended from time to time. ACS-AK will provide a copy of ACS-AK's Central Office Policies and Procedures within 10 business days of

the Approval Date of this Agreement. ACS-AK will be responsible for providing GCICC with updates to the Central Office Policies and Procedures in a timely manner.

4.4.11 All space within the GCICC caged, physical and adjacent collocation space is dedicated to and controlled by GCICC and cannot be used without the approval of GCICC.

4.4.12 As requested by GCICC, ACS-AK shall provide basic telephone service to the GCICC collocation space at tariffed rates. Upon GCICC's request, this service shall be available at the collocation space on the day that the space is turned over to GCICC by ACS-AK.

Section 5 General Rules

5.1 Sidewalks, doorways, vestibules, halls, stairways, elevator lobbies, etc. shall not be used for storage of materials or disposal of trash.

5.2 Signs, advertisements, graphics or notices visible from in or outside the building are not permitted except as required by law or other local, state, or federal regulations.

5.3 GCICC shall not use an open flame anywhere within the building.

5.4 GCICC shall not tamper with or attempt to adjust temperature controls, fire detection/suppression devices. Environmental problems shall be referred to ACS-AK's designated building representative.

5.5 No flammable or explosive fluids or material shall be kept or used within the building. GCICC shall comply with all applicable building and fire codes.

5.6 GCICC may not make any modifications, alterations, additions, repairs or decoration of the collocation space or the building in general.

5.7 Any ACS-AK employee may request GCICC or GCICC's agent or contractor to stop work if in the judgment of the employee there is jeopardy to personal safety or potential damage to the building or equipment or facilities of ACS-AK or others.

5.8 GCICC shall perform all light housekeeping services, i.e., dusting and rubbish removal within the collocation space. Rubbish shall be removed from the ACS-AK facility for disposal by, and at the expense of, GCICC.

5.9 In those cases where GCICC is issued keys for access to the building, GCICC will accept responsibility for issuance of keys to its employees and retrieval of said keys upon termination of its employees.

5.9.1 ACS-AK shall not charge for the issuance of keys nor shall it unreasonably limit the number of keys issued to GCICC, its agents, or contractors.

5.9.2 Except for electronic keys, a $250 charge will be levied for the loss of any key. There will be no charge for lost electronic keys.

5.9.3 GCICC shall notify ACS-AK immediately of any lost keys.

5.9.4 GCICC's employees, agents and contractors are prohibited from making duplicates of keys issued by ACS-AK.

5.9.5 At the expiration of GCICC's occupancy of a collocation space, GCICC shall surrender all keys, access cards and ACS-AK-provided photo identification cards to the collocation space and the building to ACS-AK.

5.10 GCICC will assure that all appropriate doors are closed at all times and are not propped open or left open unless otherwise approved by ACS-AK in writing.

5.11 GCICC will follow all applicable ACS-AK procedures that require notification or sign-in/sign-out of GCICC personnel upon entrance and exit of ACS-AK facilities.

5.12 No canvassing, peddling, soliciting of funds, or sale or advertising of GCICC services shall be allowed in the building or grounds.

5.13 ACS-AK shall not be liable or responsible for lost or stolen possessions or personal property of GCICC, its agents, contractors or employees.

5.14 ACS-AK will provide no designated parking. GCICC may use ACS-AK's parking facility if space allows and ACS-AK's designated building representative grants written permission. Permission to use ACS-AK's parking facility will not be unreasonably withheld.

5.15 GCICC's employees, its contractors and agents are not permitted to smoke anywhere within ACS-AK's building or on ACS-AK property except in designated smoking areas.

5.16 Other Notifications

5.16.1 ACS-AK will provide GCICC with written notification within ten (10) business days of any scheduled AC or DC power work or related activity in the collocated facility that will or might cause an outage or any type of power disruption to GCICC equipment located in ACS-AK facility. ACS-AK shall provide GCICC immediate notification by telephone of any emergency power activity that would impact GCICC equipment.

5.16.2 GCICC will provide ACS-AK with written notification within ten (10) business days of any scheduled AC or DC power work or related activity in the collocated facility that will or might cause an outage or any type of power disruption to ACS-AK equipment located in ACS-AK facility. GCICC shall provide ACS-AK immediate notification by telephone of any emergency power activity that would impact ACS-AK equipment.

Section 6 Space Reservation

6.1 GCICC Space Reservation

6.1.1 GCICC may reserve additional floor space or frame space in ACS-AK's premises where GCICC has or is ordering space for physical collocation if space is available for reservation.

6.1.2 GCICC can reserve an amount of space no more than the amount of space it currently utilizes or has ordered in the particular ACS-AK premise.

6.1.3 GCICC must pay the annual Space Reservation Fee set forth elsewhere in this Agreement.

6.1.4 The priority of the reservation is established on a first-come, first-served basis as determined by the time that ACS-AK receives the space reservation request form. Reservations will be date stamped upon receipt. The lowest priority reservation is that reservation with the most recent date stamp.

6.1.5 The reservation will be maintained until GCICC either terminates its collocation, cancels its order for additional space, or relinquishes its reservation by opting to not enforce its reservation.

6.1.6 When an order for physical collocation is received and all the unoccupied space is covered by reservations, the CLEC with the lowest priority reservation (option party) for which unoccupied space remains available after subtracting the space covered by reservations of higher priority reservations will be given the option of enforcing its reservation by paying the appropriate monthly rate for the space or relinquishing its reservation.

6.1.7 If the Option Party enforces its reservation, it must utilize the space for its intended purpose within 120 days or relinquish it.

6.1.8 If the CLEC with the lowest priority enforces its reservation, then the CLEC(s) with next higher priority reservation, for which unoccupied space remains available after subtracting the space covered by reservations of the remaining higher priority reservations, will be given the option of enforcing or relinquishing its reservations. As long as all CLECs with reservations for the available unoccupied floor space continue to enforce their reservations by paying

the appropriate monthly rate for the space, no space will be available for new requests for physical collocation, frame space, entrance facilities or power.

6.1.9 The CLEC that relinquishes its reservation by declining to enforce its reservation may place a new reservation, but the reservation receives a new priority based on the time the new reservation is received in writing.

6.2 ACS-AK Space Reservation

6.2.1 ACS-AK may reserve ACS-AK Central Office Floor Space under the following conditions.

6.2.2 ACS-AK's space reservation priority will be determined in the same manner as the space reservation priority for CLECs. ACS-AK must submit a space reservation request form to order to reserve space. This reservation request is date stamped and processed in the same manner as CLECs' space reservation requests.

6.2.3 ACS-AK may reserve at least the amount of space reasonably necessary for the provision of a communications-related service, including interconnection and the provision of unbundled network elements; however, the total space reservation cannot exceed the space currently used by ACS-AK.

6.2.4 ACS-AK may enforce its reservation in the same manner in which the collocating CLEC enforces its reservation. ACS-AK will impute the space rate to the ACS-AK operations department for which the space is reserved.

6.3 Space Restrictions

Where GCICC has requested space reservation at an ACS-AK premise or point and such reservation cannot be accommodated for technical reasons or because of space limitations, ACS-AK shall take GCICC's projected collocation requirements into account when planning renovations of existing facilities or constructing or leasing new facilities in that premise or point.

Section 7 Damage or Destruction

7.1 If at any time during the term hereof the collocation space or the building of which it is a part is damaged, ACS-AK may at ACS-AK's option either

a. repair such damage as soon as reasonably possible at ACS-AK's expense, in which event GCICC's use and occupancy of collocation space under this Agreement will continue without interruption, or

b. cancel and terminate GCICC's use and occupancy of collocation space under this Agreement, as of the date of the occurrence of such damage. ACS-AK will give written notice to GCICC within thirty (30) days after the date of the

occurrence of such damage of ACS-AK's intention to either repair the damage at the collocation space or terminate GCICC's use and occupancy of the collocation space.

7.2 If at any time during the term hereof the collocation space or the building of which it is a part is totally destroyed from any cause (including any total destruction required by any authorized public authority), GCICC's use and occupancy of collocation space under this Agreement shall automatically terminate as of the date of such total destruction. ACS-AK will inform GCICC of its plans to rebuild the collocation space or building as soon as practicable and will restore GCICC's collocation space as soon a practicable.

7.3 If the collocation space or the building of which it is a part is partially destroyed or damaged and ACS-AK repairs or restores them pursuant to the provisions of this Section, the Floor Space Rate payable hereunder for the period during which such damage, repair or restoration continues shall be abated in proportion to the degree to which GCICC's use of the collocation space is impaired.

7.4 Protection of GCICC's Property

ACS-AK will use reasonable efforts to avoid damage to GCICC's personal property, furniture and trade fixtures. The liability of ACS-AK for damage to GCICC's personal property, furniture and trade fixtures is subject to the limitations in Section 8 of Part A.

7.5 Default by GCICC

The occurrence of any one or more of the following events shall constitute a default of the conditions for use and occupancy of collocation space by GCICC:

a. The vacating or abandonment of the central office space by GCICC.

b. The failure by GCICC to observe or perform any of the covenants or provisions of this Agreement to be observed or performed by GCICC, where this failure shall continue for a period of thirty (30) days after written notice thereof from ACS-AK to GCICC.

c. Any of the following events:

i. the making by GCICC of any general assignment, or general arrangement for the benefit of creditors;

ii. the filing by or the making by GCICC of any general assignment, or general arrangement of the benefit of creditors;

iii. the filing by or against GCICC of a petition to have GCICC adjudged as bankrupt or a petition for reorganization of arrangement under any law relating to bankruptcy (unless, in the case of a petition filed against, GCICC, the same is dismissed within 60 days);

iv. the appointment of a trustee or receiver to take possession of substantially all of GCICC's assets located in the collocation space or GCICC's use or occupancy of the collocation space, where use or occupancy is not restored to GCICC within 30 days; or

v. the attachment, execution or other judicial seizure of substantially all of GCICC's assets located in the collocation space or of GCICC's use or occupancy of the collocation space, which such seizure is not discharged within 30 days.

d. CICC's use of the collocation space causes disruption or threat of harm upon ACS-AK's employees, facilities and equipment or other collocated CLEC's employees, facilities, and equipment services or GCICC taking actions violative of the Criminal Laws or otherwise not in keeping with the safety of the persons and property located at the ACS-AK facility.

e. CICC's use or occupancy of the collocation space, or the operation of GCICC's equipment, alone or in combination with the uses of others, interferes with the operation of ACS-AK's telecommunications equipment or facilities or the employees, facilities, and equipment of another CLEC collocation customer.

f. Failure to keep accounts current.

7.6 Remedies of ACS-AK

In addition to any remedies ACS-AK may have in law or equity, in the event of any default, ACS-AK may at any time thereafter terminate GCICC's use or occupancy of the collocation space. ACS-AK shall be entitled to recover from GCICC all damages incurred by ACS-AK by reason of GCICC's default including but not limited to, the cost of terminating GCICC's use and occupancy of the collocation space and reasonable attorney's fees.

7.7 Condemnation

7.7.1 If the collocation space or the building of which it is part or any portion thereof are taken under the power of eminent domain, or sold under the threat of the exercise of the power (all of which are called "Condemnation"), GCICC's uses and occupancy of the collocation space shall terminate as of the date the condemning authority takes title or possession, whichever first occurs.

7.7.2 Any award for the taking of all or any part of the collocation space under the power of eminent domain or any payment made under threat of exercise of such power shall be the property of ACS-AK; provided, however, that notwithstanding the foregoing, GCICC shall have the right to maintain a separate claim against the condemning authority for its loss of business, moving costs, or

loss or damage to its personal property and removable fixtures, provided such claim does not diminish or impair ACS-AK's claim.

7.7.3 In the event that ACS-AK is notified by a condemning authority that the collocation space will become subject to a taking under the power of eminent domain, ACS-AK shall promptly notify GCICC in writing that GCICC's use and occupancy of the collocation space shall terminate.

7.8 Subordination

GCICC's use and occupancy of the collocation space, at ACS-AK's option, shall be subordinate to any ground lease, mortgage, deed of trust, or any other hypothecation for security now or hereafter placed upon the real property of which the collocation space is a part and to any and all advances made on the security thereof and to all renewals, modifications, consolidations, replacements and extensions thereof. GCICC will execute, at ACS-AK's request, all documents necessary to effectuate any such subordination, hypothecation or security interest.

7.9 Warranty and Exclusions

To the extent ACS-AK provides materials or services used in construction or modification of the premises to prepare the central office for occupancy by GCICC, ACS-AK warrants that the construction services will be performed in a workmanlike manner and construction materials shall be free from known defects. **ACS-AK MAKES NO OTHER WARRANTIES, EXPRESS OR IMPLIED, AND SPECIFICALLY DISCLAIMS ANY WARRANTIES OF MERCHANTABILITY OR FITNESS FOR A PARTICULAR PURPOSE.**

7.10 Limitation of Liability

In addition to the limitations contained in Section 8 of Part A, the following provision applies: To the extent that any damage, destruction or loss of use of any of GCICC's equipment, cable, or other telecommunications facilities and equipment ("Facilities") is caused by ACS-AK's sole negligence and was not caused by any negligence or willful misconduct of GCICC but is not covered by the insurance required to be carried by GCICC, ACS-AK's liability is limited to the repair or replacement of the Facilities.

Section 8 Rate Categories

8.1 Site Preparation

The Site Preparation rate category provides for charges for costs incurred by ACS-AK for modifications or additions that must be made to ACS-AK's premises or points to accommodate GCICC's collocation and installation of GCICC's equipment. These modifications include, but are not limited to, security devices, additions to and distribution of heating, ventilation and air conditioning, AC power circuit, DC power, and necessary space modifications. The Site Preparation charge is a non-recurring charge determined on a per site basis when the detailed site requirements are developed and approved.

8.2 Floor Space

The Floor Space rate category provides for per-square foot increments of floor space located in or upon the ACS-AK's premises used and occupied by GCICC. The Floor Space rate will be charged on a monthly basis. The Floor Space rate will include the associated environmental supports such as fire suppression, heating, power, backup power, and air conditioning equivalent to ACS-AK's central office equipment environment at that location.

8.3 Ground Space

The Ground Space rate category provides for per-square foot increments of ground space on the ACS-AK's property used and occupied by GCICC. The Ground Space rate will be charged on a monthly basis.

8.4 Building Entrance Facility

The Building Entrance Facility rate category provides for GCICC's use of conduit duct space between the designated manhole and the ACS-AK cable vault. The Building Entrance Facility rate category will be charged on a monthly basis.

8.5 Power Consumption

8.5.1 The Power Consumption rate category provides for the consumption of – 48 Volt DC Power. This rate is applied per 15-ampere draw and will be charged on a monthly basis.

8.5.2 AC power will be provided as part of the floor space or through a separate meter based billed directly to GCICC.

8.6 Distribution Frame Space

The Distribution Frame Space rate category provides for space on the main distribution frame to mount connecting blocks. Each block will terminate 100 copper pairs (+/- 20%). Distribution Frame Space will be charged on a monthly basis.

8.7 Cable Rack Space

The Cable Rack Space rate category provides space outside the GCICC collocation space to install cable rack necessary for the routing of cables between the GCICC space and other places inside or upon ACS-AK premises. Cable Rack Space will be provided in increments of 50 linear feet and charged on a monthly basis. A 'linear foot' of cable rack includes cable rack up to 24" in width and the first 12 inches of space above the cable rack.

8.8 Relay Rack Space

The Relay Rack Space rate category provides space for GCICC to install cross-connect panels, such as DSX-1, DSX-3, and Fiber Distribution Panels. Relay racks will be 23" wide. Relay Rack Space will be charged in rack unit increments (1.75") on a monthly basis.

8.9 Space Reservation

8.9.1 Floor Space

The Floor Space Reservation rate category provides for the processing and maintenance of GCICC's space reservation for floor space within or upon ACS-AK premises or points. The Floor Space Reservation charge is a non-recurring charge based on the number of square feet reserved and is charged annually.

8.9.2 Distribution Frame Space

The Distribution Frame Space Reservation rate category provides for the processing and maintenance of GCICC's distribution frame space reservation for space on the main distribution frame. The Distribution Frame Space Reservation charge is a non-recurring charge based on the number of block spaces reserved and is charged annually.

8.10 Collocation Request Application Fee

A application fee of $2000.00 per site requested will be charged to GCICC for each request submitted.

PART C – ATTACHMENT VI

RIGHTS OF WAY (ROW), CONDUITS, POLE ATTACHMENTS

Section 1 Introduction

This attachment sets forth the requirements for Rights of Way, Conduits and Pole Attachments

Section 2 Requirements

2.1 General

2.1.1 ACS-AK shall make poles, ducts, conduits, conduit systems, and other ROW available to GCICC for Attachments under the terms and conditions set forth in this Section 2.

2.1.2 ACS-AK shall provide GCICC equal and non-discriminatory access to Poles, ducts, conduits, and other ROW, it owns or controls. Such access shall be provided on terms and conditions equal to that provided by ACS-AK to itself or to any other party consistent with Section 224 of the Act. Further, ACS-AK shall not preclude or delay allocation of these facilities to GCICC because of the potential needs of itself or of other parties, except for work in progress, which may be retained for ACS-AK facilities deployment within three hundred sixty five (365) calendar days of the date of the formal GCICC request.

2.1.3 Each of the Parties shall designate to the other, on the basis of specific operating regions, single points of contact for negotiating all issues relating to implementation of this Section 2. The single points of contact shall also be the contacts for all notices and demands, offers and acceptances under this Section 2, unless otherwise agreed in writing by the Parties.

2.1.4 Excepting work in progress as described above, and maintenance and emergency ducts as provided below, all usable but unassigned space on Poles, or in ducts, conduits, or other ROW owned or controlled by ACS-AK shall be available for the attachments of GCICC, ACS-AK or other providers of Telecommunications Services or cable television systems. ACS-AK may reserve for emergency and maintenance purposes one duct, conduit and inner duct in each conduit section of its facility routes. ACS-AK shall make its maintenance ducts available to GCICC for emergency restoration. GCICC will pay the appropriate duct fees while it uses ACS-AK's maintenance/emergency duct.

2.1.5 All GCICC facilities placed in or upon ACS-AK ROW, conduits and poles shall be clearly tagged or labeled with GCICC ownership identification so that it may be readily identified by ACS-AK or its contractors as GCICC facilities.

2.1.6 Ducts and Conduits
Access to ACS-AK ducts, conduits and conduit systems by GCICC or its designated personnel or contractors shall be provided on an escorted basis and upon a reasonable request for access to such ducts, conduits and conduit systems. GCICC shall pay for one access escort based on an hourly rate of the appropriate level of escorting personnel as determined by ACS-AK, unless ACS-AK and GCICC have reached agreement that no escort is necessary, which may be agreed to on a case by case basis. Such escort service shall be available on a reasonable basis 24 hours per day. GCICC is strictly prohibited from performing any work on ACS-AK's facilities or systems. GCICC has access to ACS-AK's ROW only to perform work on or protect its own facilities and system.

2.2 Space Availability Requests

2.2.1 GCICC may request information regarding the availability and conditions of poles, ducts, conduits and other ROW prior to the submission of Attachment Requests (as defined below). ACS-AK shall provide information regarding the availability and condition of ACS-AK's Poles, ducts, conduits or other ROW for Attachments within fifteen (15) business days of a request. If ACS-AK is unable to inform GCICC about availability and conditions within such fifteen-day interval, ACS-AK shall advise GCICC within ten (10) business days after receipt of GCICC 's information request and will seek a mutually satisfactory time period for ACS-AK's response, which in no event shall exceed thirty (30) calendar days. If ACS-AK's response requires a field-based survey, GCICC shall have the option to be present at the field-based survey and ACS-AK shall provide GCICC at least two (2) calendar days notice prior to the start of such field survey. During and after the field based survey, ACS-AK shall allow GCICC personnel (with ACS-AK escort) to enter manholes and view Pole structures to inspect such structures in order to confirm usability or assess the condition of the structure.

2.2.1.1 In the event ACS-AK determines there are no ducts, space available on Poles, conduits or other ROW, GCICC may request that the Parties meet to explore alternative solutions suitable for GCICC.

2.2.2 Route Maps
ACS-AK shall make existing route maps of Poles, ducts, conduits or other Right of Way available to GCICC, at a city level, at ACS-AK's facilities within two (2) business days and if such maps need to be generated, within ten (10) business days of GCICC's request. Preparation of such maps requested by GCICC shall be accommodated by ACS-AK on a reasonable basis and at GCICC's expense, plus a reasonable administrative fee. In making these maps and drawings available, ACS-AK makes no express or implied warranty as to the accuracy of these maps

and drawings, except that they reflect the equivalent accuracy and timeliness of information used by ACS-AK in its operations.

2.2.3 ACS-AK shall invoice GCICC an administrative fee equal to one hundred percent (100%) of the direct cost plus overhead of providing maps and drawings, in addition to the direct cost of copying any requested maps or drawings.

2.3 Attachment Requests

2.3.1 ACS-AK agrees to permit GCICC to place GCICC's facilities on or in ACS-AK's Poles, ducts, conduits, and other ROW pursuant to Attachment requests from GCICC approved in accordance with this Section 2, on the terms and conditions set forth herein and in the "Attachment Request". All Pole Attachment requests submitted by GCICC must include pole calculations acceptable to ACS-AK. The calculation acceptable to ACS-AK will be industry standard.

2.3.2 GCICC may submit a written Attachment Request at any time on a form to be designated by ACS-AK, to ACS-AK. An Attachment Request shall be deemed properly submitted if it identifies with specificity the ACS-AK Poles, ducts, conduits, or other ROW for which GCICC seeks Attachment. ACS-AK shall approve any properly submitted Attachment Request within ten (10) business days, if the space has previously been determined to be available under the procedures set forth in Section 2.2.1. If GCICC has not previously submitted a space availability request as outlined in Section 2.2.1, GCICC will be referred to Section 2.2.1. No Attachments shall be placed on any ACS-AK Pole identified in an Attachment Request until the Attachment Request has been approved by ACS-AK. GCICC may submit subsequent Attachment Requests as needed. GCICC shall have fourteen (14) calendar days after ACS-AK's return of the approved Attachment Request to GCICC to execute the Attachment Request and return the same to ACS-AK. If GCICC does not return the Attachment Request within the fourteen (14) calendar day interval specified above, then such request shall be null and void and such ROW shall become immediately available to other parties. The approved Attachment Request shall serve as the binding attachment contract between the Parties.

2.3.2.1 ACS-AK and GCICC may provide advance copies of projects that propose the construction of, or any activity that would change the available space on poles, conduits, and or direct buried facilities. The advance copies would depict the proposed routing and structure specifications. The purpose of this information is to provide both ACS-AK and GCICC the opportunity to share in the design and joint use of a structure.

2.3.3 Together with ACS-AK's notice of approval of an Attachment Request submitted by GCICC, ACS-AK shall also provide an estimate of the Make Ready

Work costs associated with making the space available for GCICC's Attachment. ACS-AK shall complete any Make Ready Work required to enable GCICC to install its facilities at both a reasonable cost and within a reasonable period of time, both of which shall be agreed upon in writing by ACS-AK and GCICC. If such agreement does not occur within ten (10) business days of ACS-AK's provision of a quote for such work or GCICC determines the quote is too high, GCICC may request ACS-AK hire outside contractors to complete the Make Ready Work at GCICC's expense. All Make Ready Work on GCICC's owned facilities shall be done by GCICC personnel and or its approved contractor. Where GCICC submits an Attachment Request and subsequently fails to return an executed Attachment Request within fourteen (14) calendar days of ACS-AK's notice of approval, GCICC shall reimburse ACS-AK for its reasonable cost to provide pre-ordering information and any site survey work and the Attachment Request shall become null and void. Upon acceptance of an approved Attachment Request by GCICC and its return to ACS-AK, ACS-AK shall bill GCICC for any Make Ready Work non-recurring charges. Upon completion of any required Make Ready Work by ACS-AK or upon receipt of the approved Application Request by ACS-AK, whichever is later, written notice shall be provided to GCICC granting access to the attachment and advising GCICC of the date that monthly billing for such attachment shall commence. GCICC shall have one hundred eighty (180) calendar days to begin attachment and/or installation of its facilities after receipt of such notice. Any such construction shall be completed by the end of three hundred sixty-five (365) calendar days after receipt of such notice, unless GCICC notifies ACS-AK differently and ACS-AK agrees to such delay. GCICC's notification to ACS-AK shall be provided at least sixty (60) calendar days prior to the expiration of the three hundred sixty-five (365) calendar day period. If GCICC does not begin construction within this time frame, ACS-AK will cease monthly billing to GCICC and the access to the ROW and the Attachment Request shall be deemed null and void.

2.3.4 ACS-AK shall make space available to GCICC as soon as any Make Ready Work to be provided by ACS-AK, as described in Section 2.3.3, is completed. At that time, GCICC shall have the right, subject to the terms and conditions of this Agreement, to place and maintain the facilities described in the Attachment Request in the space designated on or in ACS-AK's Poles, ducts, conduits, and other ROW identified therein. GCICC may, at its option, use GCICC or GCICC-designated personnel, which GCICC shall identify to ACS-AK prior to beginning construction, to attach its equipment to ACS-AK structures, subject to ACS-AK's written agreement with the proposed construction methods proposed by GCICC to perform such work. When GCICC places and or maintains facilities on ACS-AK property under any provisions of this Section 2, they must either use ACS-AK personnel or ACS-AK approved contractors to perform such work. Except for Pole Attachments ACS-AK may (at ACS-AK's option) provide a qualified inspector to accompany GCICC or its contractors and GCICC shall pay for same based on an hourly rate. ACS-AK may stop GCICC or its contractors' construction activities if the work is not performed in accordance

with the industry standards, practices, and applicable NESC, and OSHA regulations as approved by ACS-AK. Any such approval shall not be unreasonably withheld, delayed or denied. In the event ACS-AK believes GCICC or GCICC-designated personnel are improperly or incorrectly performing construction, performing construction in an unsafe manner, or are in violation of any applicable NESC or OSHA regulations, ACS-AK may stop construction and shall immediately notify GCICC of the situation. GCICC and ACS-AK will jointly determine the next course of action to eliminate any problems and move quickly to resume construction.

2.3.5 GCICC agrees to pay ACS-AK the Make Ready Work costs within sixty (60) business days of receiving ACS-AK's invoice.

2.3.6 ACS-AK will provide GCICC with answers to an environmental, health and safety questionnaire for each ACS-AK facility in or on which GCICC seeks an Attachment. GCICC may provide this questionnaire with its Attachment Request and ACS-AK shall return it to GCICC with the approval of GCICC's Attachment Request.

2.4 Authority to Place Attachments

2.4.1 Before GCICC places any Attachment pursuant to an approved Attachment Request, GCICC shall submit evidence of its authority to erect and maintain the facilities to be placed on ACS-AK's facilities within the public streets, highways and other thoroughfares or on private property, where such additional authority is required by law. GCICC shall be solely responsible for obtaining all necessary licenses, authorizations, permits, and consents from federal, state and municipal authorities that may be required to place Attachments on ACS-AK's facilities.

2.4.2 ACS-AK shall not unreasonably intervene against or attempt to delay the granting of any necessary licenses, authorizations, permits or consents from federal, state and municipal authorities or private property owners that may be required for GCICC to place its Attachments on or in any Poles, ducts, conduits, or other ROW that ACS-AK owns or controls.

2.4.3 If any license, authorization, permit or consent obtained by GCICC is subsequently revoked or denied for any reason, permission to attach to ACS-AK's facilities shall terminate immediately and GCICC shall remove its Attachments (if any) within one hundred twenty (120) calendar days. GCICC may, at its option, litigate or appeal any such revocation or denial and if GCICC is diligently pursuing such litigation or appeal, GCICC may continue to maintain its Attachment. In doing so, GCICC agrees to defend and indemnify ACS-AK from and against any and all costs resulting from GCICC's continuation of the Attachment which is the subject of such litigation or appeal.

2.5 Capacity

2.5.1 When there is insufficient space on a Pole or in a ACS-AK conduit to accommodate a GCICC requested Attachment or occupancy, ACS-AK shall:

a. replace the Pole or conduit with one of greater height or capacity; or

b. place additional Poles or conduits in the ROW. GCICC shall be obligated to reimburse ACS-AK for its costs incurred to complete the work. If ACS-AK cannot complete the work in a timely manner as reasonably determined by GCICC, then GCICC may cause ACS-AK to contract the work out to better meet its time needs.

2.5.2 If the Pole or Conduit is at 100% capacity, either at maximum or over loaded in the case of a Pole, or out of capacity in the case of a Conduit System, proportional share of costs will be evaluated and shared if there is any net gain in capacity above the requested capacity to accommodate GCICC. Reasonable engineering, planning and joint usage will always be considered.

2.5.3 ACS-AK shall permit GCICC to break out of ACS-AK conduit and to maintain facilities within conduit space used by GCICC and, where required by ACS-AK, shall provide GCICC designated personnel with one escort and GCICC shall pay for such escort based on an hourly rate. Such escort service shall be available twenty-four (24) hours per day each day of the week.

2.5.4 ACS-AK shall permit manhole interconnections and breaking out of ACS-AK manholes and shall provide GCICC with sufficient space in manholes for the racking and storage of cable as requested by GCICC. ACS-AK reserves the right to deny nonstandard requests to break out of manholes where the location in which GCICC wants to break out is blocked by a cable rack.

2.5.5 ACS-AK shall take all reasonable measures to allow access and/or egress to all conduit systems. This shall include but not be limited to ACS-AK's removal, upon GCICC's request, of any retired cable for conduit systems to allow for the efficient use of conduit space within a reasonable period of time. If the Parties are unable to agree on what is reasonable (in terms of measures or time intervals), the matter may be submitted in accordance with the Dispute Resolution Procedures of this Agreement by either Party.

2.5.6 Where a spare inner duct does not exist, ACS-AK shall install an inner duct in a spare ACS-AK conduit. GCICC shall pay all of ACS-AK's costs for this work within thirty (30) days of receipt of the invoice. The Make Ready Work process of Section 2 shall govern the installation of such inner duct, that is, if ACS-AK cannot complete the work in a timely manner as reasonably determined

by GCICC, then GCICC may cause ACS-AK to contract the work out to better meet their time needs.

2.5.7 Neither Party shall attach, or permit other entities to attach facilities on existing facilities of the other without the other Party's prior written consent. Such consent will not be unreasonably withheld if the requested use is to facilitate use of the ROW by ACS-AK or any other Party on a temporary basis until such reasonable time as the ROW can be expanded.

2.5.8 GCICC acknowledges that, from time to time, it may be necessary or desirable for ACS-AK to change out Poles, relocate, reconstruct, or modify portions of its conduit system or rearrange facilities contained therein or connected thereto and that such changes may be necessitated by ACS-AK's business needs or by factors outside of ACS-AK's control, such as the decision by a municipality to widen streets or authorized application of another entity seeking access to ACS-AK's Poles or conduit systems. GCICC agrees that GCICC will, upon ACS-AK's request and at ACS-AK's expense, but at no cost to GCICC so long as no additional cost is incurred by ACS-AK as a result of GCICC being attached, participate with ACS-AK (and other licensees) in the relocation, reconstruction, or modification of ACS-AK's conduit system or facilities rearrangement.

2.6 Sharing of Right of Way

ACS-AK shall offer the use of such ROW it has obtained from a third party to GCICC, to the extent that ACS-AK owns or controls the ROW, or to the extent the agreement with the third party reasonably permits ACS-AK to grant such access to GCICC.

2.7 Emergency Situations

Within fifteen (15) business days after the Approval Date of this contract, ACS-AK and GCICC shall mutually agree on a non-discriminatory priority method to access ACS-AK manholes and conduits in emergency situations.

2.8 Attachment Fees

2.8.1 GCICC shall pay ACS-AK an Attachment fee consistent with the Act, the FCC's implementing rules and regulations promulgated thereunder, and/or any relevant state Commission order, for each ACS-AK facility upon which GCICC obtains authorization to place an Attachment. The Parties agree that any new FCC rules and regulations setting forth a new methodology for determining the Attachment fee shall govern the establishment of the pricing of Attachments.

2.8.2 ACS-AK shall maintain an inventory of the ACS-AK facilities occupied by GCICC based upon the cumulative facilities specified in all Attachment Requests approved in accordance with this section. GCICC shall provide ACS-AK with "as built" drawings after each Attachment is completed. GCICC shall have the right to remove any Attachment at any time, and it shall be GCICC's

sole responsibility to notify ACS-AK of any and all removals by GCICC of its Attachments from ACS-AK's facilities. Such notice shall be provided to ACS-AK at least thirty (30) calendar days prior to the removal of the Attachment and shall take the form of a notice of removal. GCICC shall remain liable for an Attachment fee for each ACS-AK facility included in all approved Attachment Requests until a notice of removal has been received by ACS-AK or GCICC cancels an Attachment pursuant to Section 2.13. ACS-AK may, at its option, conduct a physical inventory of the Attachments for purposes of determining the Attachment fees to be paid by GCICC under this Section 2.

2.9 Additions and Modifications to Existing Attachments

2.9.1 GCICC shall not modify, add to or replace facilities on any pre-existing Attachment without first notifying ACS-AK in writing of the intended modification, addition or replacement at least thirty (30) calendar days prior to the date the activity is scheduled to begin. The required notification shall include:

a. identification of the impacted Attachment

b. the date the activity is scheduled to begin

c. a description of the planned modification, addition or replacement

d. a representation that the modification, addition or replacement will not require any space other than the space previously designated for GCICC's Attachments, and

e. a representation that the modification, addition or replacement will not impair the structural integrity of the facilities involved. In the event of any modifications to GCICC facilities on a pole or in a conduit system by ACS-AK, ACS-AK will notify GCICC promptly once they determine the work is necessary, but in no case no less than five (5) business days in advance of the said work commencing.

2.9.2 If the modification, addition or replacement specified by GCICC in its notice will require more space than that currently allocated to GCICC or will require the reinforcement, replacement or an addition of support equipment to the facilities involved in order to accommodate GCICC's modification, addition or replacement, GCICC will submit an Attachment Request in compliance with Section 2.3 in order to obtain authorization for the modification, addition or replacement of its facilities.

2.10 Noncompliance

2.10.1 If, at any time, ACS-AK determines that GCICC's facilities or any part thereof have not been placed or maintained or are not being used in accordance

with the requirements of this Section, ACS-AK may send a written notice to GCICC specifying the alleged noncompliance. If GCICC does not dispute ACS-AK's assertion in writing within thirty (30) calendar days of receipt thereof, GCICC will, within sixty (60) calendar days of receipt of the notice of noncompliance, provide ACS-AK with a schedule for bringing GCICC's facilities into compliance (which schedule shall be subject to ACS-AK's agreement, which agreement shall not be unreasonably withheld) and shall bring such facilities into compliance within the time periods specified in such schedule. If the schedule can not be agreed to within ten (10) business days, the issue will be resolved through the Dispute Resolution Procedure.

2.10.2 If GCICC disputes ACS-AK's assertion of noncompliance, GCICC shall notify ACS-AK of the basis of GCICC's belief that GCICC's facilities are compliant. If the Parties are unable to agree on whether a noncompliance exists within thirty (30) calendar days of receipt of the noncompliance notice by GCICC, then the issue shall be resolved pursuant to the Dispute Resolution Procedures.

2.11 Surveys and Inspections of Attachments

2.11.1 The exact location of Attachments on or in ACS-AK's facilities may be determined through a survey. If so requested, GCICC and/or any other entity owning or jointly owning the facilities with ACS-AK may participate in the survey.

2.11.2 Apart from surveys conducted in accordance with Section 2.11.1 above, ACS-AK shall have the right to inspect any Attachment on or in ACS-AK's facilities as conditions may warrant. No joint survey or inspection by ACS-AK shall operate to relieve GCICC of any responsibility, obligation or liability assumed under this Agreement.

2.12 Notice of Modification or Alteration of Poles, Ducts, Conduits, or Other ROW by ACS-AK

If ACS-AK plans to modify or alter any ACS-AK facilities upon which GCICC has Attachments, ACS-AK shall provide GCICC notice of the proposed modification or alteration at least sixty (60) calendar days prior to the time the proposed modification or alteration is scheduled to take place. If GCICC decides not to modify or add to its existing Attachment, GCICC shall participate at no cost in such modification and rearrangement. If GCICC adds to or modifies its facilities GCICC shall be charged its proportionate share of the reasonable costs incurred by ACS-AK for such modification or rearrangement. GCICC shall make all rearrangements of its facilities within such period of time, which shall not be less than sixty (60) calendar days, as is jointly determined to be reasonable by the Parties based on the amount of rearrangements necessary and a desire to minimize chances for service interruption or facility-based service denial to an GCICC customer.

2.13 Termination of Section 3 or An Individual Attachment by GCICC

2.13.1 This Section 2 may be terminated by GCICC any time prior to the expiration of its term by providing written notice to ACS-AK of its intent to terminate not less than ninety (90) calendar days prior to the date such termination is to become effective. Within one hundred twenty (120) calendar days after the date this Section 2 is terminated, GCICC shall cause all of its Attachments to be removed from all of ACS-AK's Rights of Way. In the event GCICC fails to remove its Attachments as required by this Section 2, ACS-AK shall have the option to remove all such Attachments and store them in a public warehouse or elsewhere or dispose of them at the expense of and for the account of GCICC without ACS-AK being deemed guilty of trespass or conversion, and without ACS-AK becoming liable for any loss or damages to GCICC occasioned thereby.

2.13.2 ACS-AK may terminate, at any time, an Attachment under this Agreement upon thirty (30) calendar days in connection with any taking or condemnation of property on which such Attachment is located by a competent authority for any public use or purpose.

2.14 Abandonment

Nothing in this Agreement shall prevent or be construed to prevent ACS-AK from abandoning, selling, assigning or otherwise disposing of any Poles, conduit systems, or other ACS-AK property used for Attachments, provided, however, that ACS-AK shall condition any such sale, assignment or other disposition subject to the rights granted to GCICC pursuant to this Agreement. ACS-AK shall promptly notify GCICC of any proposed sale, assignment or other disposition of any facilities or other ACS-AK property used for GCICC 's Attachments.

2.15 Dispute Resolution Procedures

If either Party has declared the other in default of any provisions of this Attachment VI, or has otherwise notified the other Party that it is not in compliance with the terms of this Section 2, either Party may invoke the Dispute Resolution Procedures, described in Section 22 of this Agreement. In the event either Party invokes the Dispute Resolution Procedures as provided in this Agreement, ACS-AK will continue to process Attachment Requests pursuant to this Section 2.

PART C – ATTACHMENT VII

LOCAL NUMBER PORTABILITY

Section 1 ACS-AK Provision of Local Number Portability

ACS-AK shall provide Local Number Portability (LNP) in accordance with requirements of the Act and FCC Rules and Regulations. LNP shall be provided through the use of a Local Routing Number (LRN) database solution, implemented by the Approval Date of this Agreement or upon entry by GCICC into local competition in the ACS-AK service area, whichever is later.

PART C – ATTACHMENT VIII

GENERAL BUSINESS REQUIREMENTS

Section 1 Procedures

1.1 ACS-AK shall bill GCICC for each service supplied by ACS-AK to GCICC pursuant to this Agreement at the rates set forth in this Agreement. GCICC shall bill ACS-AK for each service supplied by GCICC to ACS-AK pursuant to this Agreement at the rates set forth in this Agreement. The bill will be transmitted electronically unless otherwise approved by the billed party. The bill shall contain sufficient detail so that the data can be manipulated and sorted, and summarized by billing codes.

1.2 ACS-AK and GCICC shall provide a contact for billing questions or problems that may arise during the implementation and performance of the terms and conditions of this Agreement.

1.3 Subject to the terms of this Agreement GCICC and ACS-AK shall pay invoices within thirty (30) days from the date the invoice is issued. If the payment due date is a Saturday, Sunday or has been designated a bank holiday payment shall be made the next business day.

1.4 ACS-AK shall issue any applicable recurring cost credits to GCI on a monthly basis pursuant to the terms of Part C, Attachment X.

Section 2 Revenue Protection

ACS-AK and GCICC shall make available, at parity with what ACS-AK or GCICC provides to itself, its Affiliates and other local telecommunications CLECs, all present and future fraud prevention or revenue protection features, including prevention, detection, or control functionality embedded within any of the Network Elements or Unbundled Network Elements.

Section 3 Provision of Subscriber Usage Data

This Section sets forth the terms and conditions for the provision of Recorded Usage Data. Usage data will be provided only to the extent that ACS-AK bills GCICC for the usage and normally records that usage for its own use.

Section 4 Procedures

4.1 General

4.1.1 ACS-AK shall record and provide to GCICC all usage originating from GCICC subscribers using service ordered by GCICC, where ACS-AK bills GCICC for the usage and records those same services for ACS-AK subscribers.

4.2 Retention of Records:

ACS-AK and GCICC shall, to the extent technically feasible, record call detail associated with each call originated or terminated using interconnection trunks. ACS-AK and GCICC shall maintain a machine readable back-up copy of the message detail provided to the other party for a period of at least 2 years. During this period, either party shall provide any data back-up to the other upon the request and with concurrence to pay time and materials to produce the data and deliver it.

4.3 Recorded Usage Data

ACS-AK shall provide Recorded Usage Data to GCICC on a schedule agreed to by the parties. In an emergency, the parties will work together to provide specific recorded usage within two business days of the request.

4.4 GCICC shall provide a contact responsible for receiving usage transmitted by ACS-AK and receiving usage tapes from a courier service in the event of a facility outage.

4.5 Lost Data

GCICC Recorded Usage Data determined to have been lost, damaged or destroyed as a result of an error or omission by ACS-AK in its performance of the recording function shall be recovered by ACS-AK, on a non-discriminatory basis, at no additional charge to GCICC to the extent it is recovered as part of ACS-AK's normal recovery operations. For usage data that GCICC relies on to bill its end users, ACS-AK will not bill if the data is recovered and transmitted to GCICC more than three months after the usage occurs. For all other data, ACS-AK will not bill if the data is recovered more than one year after usage occurs.

4.6 Testing, Changes and Controls

The Recorded Usage Data, EMR/EMI format, content, and transmission process shall be tested as agreed upon by GCICC and ACS-AK.

4.7 Periodic Review: Control procedures for all usage transferred between ACS-AK and GCICC will allow periodic review. This review may be included as part of an Audit or examination of ACS-AK or GCICC or as part of the normal production interface management function. Problems that impact the flow of usage between ACS-AK and GCICC must be identified and jointly resolved as they occur. The resolution may include changes to control procedures, so similar problems would be avoided in the future. Any

changes to control procedures would need to be mutually agreed upon by GCICC and ACS-AK.

4.8 Software Changes

4.8.1 When ACS-AK or GCICC plans to introduce any software changes which impact the format, content, schedule, or structure of exchanged usage data the other party shall be notified no less than thirty (30) calendar days before such changes are implemented. For major changes, the other party shall be notified no less than three (3) calendar months before such change is implemented. If GCICC believes that a particular change will have a material and adverse impact on its ability to exercise its rights under this agreement GCICC may invoke the Dispute Resolution process described in Section 23 of Part A of this agreement. ACS-AK will not proceed with the change until the ADR has completed.

4.8.2 ACS-AK and GCICC shall communicate the projected changes to the data exchange contact so that potential impacts on processing can be determined.

4.9 The parties shall review the impact of the change on the entire control structure. The parties shall negotiate any perceived problems and shall arrange to have the data tested utilizing the modified software if required.

4.10 GCICC Requested Changes
GCICC may submit a purchase order to negotiate and pay for initial direct and future maintenance costs, if any, associated with changes in the content and format of the usage data transmitted by ACS-AK.

4.11 When the negotiated changes are to be implemented, GCICC and/or ACS-AK shall arrange for testing of the modified data.

4.12 Information Exchange and Interfaces

4.12.1 Rejected Recorded Usage Data
Upon agreement between the parties that messages sent to GCICC contain invalid data, rendering the message incapable of being billed, the messages may be returned to ACS-AK in their original EMR/EMI format. Standard EMR/EMI return codes shall be utilized. ACS-AK may correct the message and submit it to GCICC provided that the time period associated with Lost Data has not lapsed.

PART C – ATTACHMENT IX

REPORTING STANDARDS NOT COVERED BY PART C, ATTACHMENT X

	DESCRIPTION	STANDARD	REMEDY
	Pre-Ordering/ Ordering/ Provisioning		
1	Electronic OSS Availability (OSS01-OSS09)	**a.** Will be available as published by ACS-F OSS Interface Operational Hours Schedule. Available hours will be at least equal to the published availability of underlying operational support systems for internal ACS-F use. Within the published hours of availability, the interfaces will be accessible and operational a minimum of 99% per month, measured collectively, with the following exceptions: **i.** Unscheduled downtime as a result of an outage of underlying systems, which also deny access to in internal ACS-F users will be excluded from the availability calculation. **ii.** Unscheduled outages due to defects or failures of hardware, data networks, systems software, vendor packaged software, custom-developed software or any other situation beyond the direct control of ACS-F. **b.** ACS-F shall provide GCICC electronic OSS dispatch and execution with the same priority as internal operations.	The remedy proposed as follows: 1. One 30 day period, (measured by calendar month) within twelve 30 day periods (measured as a calendar year) of not meeting a standard or standards results in no penalty. 2. The next or second occasion of not meeting a standard, within a twelve month span, after the first occasion, results in the requirement for ACS to define to GCICC the change(s) in practice or process that will allow ACS to return to and maintain the standard as set in this contract. 3. In the Event of a third occasion, of not meeting the standard within the 12 month span the parties shall be required to report all instances where the same performance standard has been violated within the twelve-month period to the Commission. The report shall include details about the first two violations and their consequences.

	DESCRIPTION	STANDARD	REMEDY
2	Electronic Order Entry directly into ACS-F's ordering and provisioning systems	**a.** Will be available 6/30/01 ACS-F has committed to delivering an electronic ordering interface if GCICC is willing to fund development. **b.** Will be available as published by ACS-F OSS Interface Operational Hours Schedule. Available hours will be at least equal to the published availability of underlying operational support systems for internal ACS-F use. Within the published hours of availability, the interfaces will be accessible and operational a minimum of 99% per month, measured collectively, with the following exceptions: **i.** Unscheduled downtime as a result of an outage of underlying systems, which also deny access to in internal ACS-F users will be excluded from the availability calculation. **ii.** Unscheduled outages due to defects or failures of hardware, data networks, systems software, vendor packaged software, custom-developed software or any other situation beyond the direct control of ACS-F.	See remedy under #1.
3	Installation Requirements Field/non-field Orders	**a.** 98% of all field orders will result in a completion call to GCICC from the field site at time of order completion.	See remedy under #1.
4	Order Completion Information	**a.** 98% of all field orders will be closed to GCICC within 4 hours of field work. **b.** 99% of conversion orders,	See remedy under #1.

	DESCRIPTION	STANDARD	REMEDY
		(jumper swing, no field work) will be closed to GCICC within one hour of the conversion orders' assigned time of day **c.** 99% of Evening conversions will be completed at the assigned time of day and a completion call will be placed to GCICC within 5 minutes of the completion activity. **d.** 95% all cut through orders will be completed to GCICC within one hour of actual cut through activity.	

	DESCRIPTION	STANDARD	REMEDY
	Interconnection Trunking, Private Lines, DSL Qualified Loops		
5	DSL Loop Studies (EML's)	**a.** 95% of DSL qualified Loop studies shall be completed within 5 days of request submittal. **b.** The remainder within 15 days	See remedy under #1.
6	DSL Installation Requirements	**a.** 98% of all field orders will be closed to GCICC within 4 hours of field work. **b.** 95% all cut through orders will be completed to GCICC within one hour of actual cut through activity.	See remedy under #1.

	DESCRIPTION	STANDARD	REMEDY
	Maintenance and Repair	**Measure**	
7	Reporting trouble within 5 days of the date installed	**a.** .5% or less of GCICC conversion, move or new install orders will result in a subscriber trouble call within 5 days of order completion (standard excludes CPE, GCICC or GCICC customer error caused troubles).	See remedy under #1.
8	Reporting trouble within 30 days of the date installed	**a.** No more than 2% if total GCICC customer related trouble tickets will be due to recurring troubles (standard excludes CPE, GCICC or GCICC customer error caused troubles).	See remedy under #1.
9	Percent of troubles reported vs. lines in service.	**a.** Percent of GCICC customer troubles is no more than 6% of GCICC lines in service (standard excludes CPE, GCICC or GCICC customer error caused troubles).	See remedy under #1.
10	Average clearing time - out of service – Residential	**a.** 95% cleared within 24 clock hours, except for those out of service calls received after 2:00pm on Friday. **b.** Remai[illegible] of residential out of service troubles within 96 clock hours of the trouble report.	See remedy under #1.
11	Average clearing time - out of service – Business	**a.** 95% are cleared within 16 clock hours of report. **b.** The remaining are cleared within 32 hours of report.	See remedy under #1.
12	Average clearing time-out of service-DSL-Qualified Loops or special circuits	**a.** 90% will be cleared within 4 hour of the trouble report **b.** Remainder within 16 clock hours.	See remedy under #1.
13	Average clearing	**a.** 95% cleared within 24 clock	See remedy under #1.

	DESCRIPTION	STANDARD	REMEDY
	times-non out of service troubles	hours, except for those out of service calls received after 3:00pm on Friday. **b.** Remaining 5% of non-out of service troubles within 96 clock hours of the trouble report.	
14	Trouble resolution	**a.** 99% of all troubles will be cleared within 96 hours, and the remaining 1% will be cleared within 168 hours.	See remedy under #1.
15	Status Updates	**a.** 99% of GCICC open troubles tickets will be updated every 4 hours, 8:00am – Midnight.	See remedy under #1.
16	Buried Drops	**a.** Drops laid on ground before October 1 will be buried in that calendar year, weather permitting.	See remedy under #1.

	DESCRIPTION	STANDARD	REMEDY
	Billing	**Measure**	
17	Notice of format change	**a.** A minimum of 60 days notice will be provided to GCICC prior to any bill format changes being implemented.	See remedy under 1.
18	Electronic Billing	**a.** Invoice data will be transmitted electronically, be capable of sorting and manipulation electronically, and contain the following data: **1.** Account number **2.** Telephone numbers **3.** Offer codes by **a.** telephone and/or **b.** circuit number **4.** Service address, by **a.** telephone and/or **b.** circuit number	See remedy under 1.

	DESCRIPTION	STANDARD	REMEDY
19	Billing timeliness	**a.** Corrections in billing will be invoiced on the subsequent bill.	See remedy under 1.

PART C – ATTACHMENT X

PROCESSING AND PROVISIONING INTERVAL METRICS

This Processing and Provisioning Interval Metrics Agreement (hereinafter the "Performance Agreement" or "Attachment X") is between the parties named in that certain Settlement Agreement dated March 5, 2004 (the "Settlement Agreement") to which this Performance Agreement is made part of as Exhibit A.

1. Definitions

Terms not otherwise defined in this Attachment X shall have the meaning ascribed to them in the Settlement Agreement. Terms not otherwise defined in this Attachment X or the Settlement Agreement shall have the meaning ascribed to them in the applicable interconnection agreement between GCI and ACS in effect during the term of the Settlement Agreement. For the purposes of this Attachment X, "GCI" shall have the same meaning as "GCICC", and "ACS" shall have the same meaning as "ACS-AK."

Baseline – The volume of Simple Orders necessary to the calculation of the metrics for processing and provisioning Simple Orders. The initial Baseline as of the Effective Date is 400 Simple Orders per day.

Baseline Adjustment – The calculation used to determine an adjustment to the Baseline. The calculation components to adjust Baseline are as follows: sum of the last 6 months of Simple Orders divided by the number of total business days in that same six (6) month period (simple average number of orders daily) and multiply by 133%. The calculation and corresponding adjustments to the Baseline will occur every three (3) months for the ensuing three (3)month period. The first adjustment will be made June 1, 2004.

Days – Refers to business days and excludes weekends and ACS holidays (non-business days). Processing and provisioning days are counted pursuant to Section 2.

Due Date – The date identified in an ACS firm order confirmation ("FOC") as the date scheduled for work completion. For the purpose of applying the Missed Due Date Recurring Cost Credit, an order will be deemed completed on the Due Date only if completed by 3:00 PM.

Complex Order – An order requesting installation, move, change, or disconnect of a Special Circuit; TSR Centrex; TSR Direct Inward Dial ("DID"); TSR Digital Subscriber Services (DSS); and TSR Primary Rate Interface ("PRI") services pursuant to local interconnection.

Metric – The benchmarks established by the parties and set forth in Sections 3.A. and 3.B., pursuant to which ACS' performance of Processing Intervals and Provisioning Intervals for Orders will be measured.

Non-Electronic Orders – Orders that are entered into the ACS OSS systems by ACS personnel.

Processing Interval – The number of days, as measured pursuant to Section 2, from the day a GCI Order is received by ACS to the day ACS returns the FOC, or rejection, for such Order.

Provisioning Interval – The number of days, as measured pursuant to Section 2, from the day ACS returns the FOC for a GCI Order to the Work Completion Date for such Order.

Simple Order – An order for services or facilities involving GCI residential or business customers, except as defined in Complex Orders or Special Complex Orders.

Simple Order Provisioning Categories – (1) Orders Requiring a Field Visit ("Field"), (2) Orders Requiring Central Office Work ("C/O"), (3) Orders Completed by the Business or Customer Service Representative ("BSR/CSR"), and (4) Billing Records only Orders ("Billing Change").

Special Complex Order – An order requesting installation, move, change, or disconnect of digital subscriber line ('DSL"), ordered as an unbundled network element.

TSR – Total Service Resale a/k/a wholesale rates charged by ACS pursuant to local interconnection agreements.

Work Completion Date –The date ACS completes Billing Change, BSR/CSR, C/O, or Field provisioning, as applicable, for Simple, Complex, or Special Complex Order fulfillment.

2. Counting Days

A. Counting Processing Days

Table (1) demonstrates the method of counting processing days for purposes of this Performance Agreement. Though the Processing Interval Metrics are different for Simple, Complex, and Special Complex Orders, the method of counting processing days is the same. GCI will receive notice of ACS' receipt of Orders via automatic electronic confirmation, or other mutually agreeable means as needed. In the event that GCI does not receive confirmation, GCI will notify ACS. In addition, when GCI submits more than one order in a given transmittal, GCI will provide ACS the total number of orders included with that transmittal.

For Orders received by ACS on or before 11:59 pm on any business day, day zero (0) is that business day.

For Orders received by ACS on or before 11:59 pm on any non-business day, day zero (0) is the next business day.

TABLE 1 Scenarios of Orders received on a business and non-business day

Order Received on or before 11:59 pm	FOC or Rejection Returned at Any Time on such Day	Processing Day Count
Monday	FOC returned Monday	0 days
	FOC returned Tuesday	1 day
	FOC returned Wednesday	2 days
Thursday	FOC returned Thursday	0 days
	FOC returned Friday	1 day
	FOC returned Monday	2 days
Saturday	FOC returned Monday	0 days
	FOC returned Tuesday	1 day
	FOC returned Wednesday	2 days

B. Counting Provisioning Days

For purposes of this Performance Agreement, the day ACS returns the FOC for a given Order is day zero (0) for purposes of counting provisioning days. Otherwise, days are counted in the same fashion for provisioning as they are for processing (i.e., non-business days are not counted).

C. Exceptions

Notwithstanding anything to the contrary set forth in this Performance Agreement, a day will not be counted if an ACS electronic system necessary for processing or provisioning Orders is unavailable for use for processing or provisioning both GCI and ACS Orders for four (4) or more hours on such day.

3. Processing and Provisioning Metrics

Subject to the exceptions set forth in Section 3.C., the Processing Interval Metrics and Provisioning Interval Metrics described in this Section 3 for Simple Orders will go into effect on the day following the date both parties execute the Settlement Agreement (the "Effective Date"); the Processing Interval Metric for Complex and Special Complex Orders will go into effect on the Effective Date, and the Provisioning Interval Metric for Complex and Special Complex Orders will go into effect thirty (30) calendar days after the Effective Date.

A. Processing Interval Metrics for Non-Electronic Orders[3]

[3] The processing interval for any Order that is processed via Electronic Operations Support Systems shall be the same as or better than those provided herein.

Simple Orders – The Processing Interval Metric for Simple Orders received on a given day that fall on or below the Baseline then in effect is two (2) days.

The Processing Interval Metric for those Simple Orders received on a given day that exceeds the Baseline then in effect, up to and including 150% of the Baseline, is three (3) days.[4]

The Processing Interval Metric for those Simple Orders received on a given day that exceed 150% of Baseline then in effect, is five (5) days.[5]

Complex Orders – The Processing Interval Metric for all Complex Orders is no more than six (6) days.

Special Complex Orders – The Processing Interval Metric for all Special Complex Orders is no more than six (6) days.

B. Provisioning Interval Metrics

Simple Orders – The Provisioning Interval Metrics for Simple Orders received on a given day are defined in Table 2. The Provisioning Interval Metrics for Simple Orders are established based upon the Simple Provisioning Category applicable to such Order. A Simple Order that involves multiple Simple Provisioning Categories will be categorized in the Simple Provisioning Category with the longest Provisioning Interval Metric. Provisioning Interval Metrics are not cumulative.

[4] Excludes conversion/transfer orders pursuant to 3 AAC 53.290(g).

[5] Excludes conversion/transfer orders pursuant to 3 AAC 53.290(g).

Table 2: Simple Orders

ACS Provisioning Category	Provisioning Order Type	Provisioning Metric for Orders within and including Baseline[6]	Provisioning Metric only for those Orders Exceeding Baseline
Billing Change	Any Account Records Change	Parity or 1 day, whichever is less	N/A
BSR/CSR	Wholesale/UNE-P Installation or Move not requiring a field visit with line equipment in place	Parity or 2 days, whichever is less	N/A
BSR/CSR	Conversion Wholesale / UNE-P	Parity or 2 days, whichever is less	N/A
BSR/CSR	Provisioning Change Wholesale to/from UNE-P	Parity or 2 days, whichever is less	N/A
BSR/CSR	Disconnect Wholesale or UNE-P	Parity or 2 days, whichever is less	N/A
BSR/CSR	Restoral/Reconnect from Non-Pay	Parity or 2 days, whichever is less	N/A
BSR/CSR	Feature Change Wholesale or UNE-P	Parity or 2 days, whichever is less	N/A
C/O	Loop Installation or Move not requiring a field visit	Parity or 4 days, whichever is less	No more than 10 days
C/O	Wholesale/UNE-P Installation or Move not requiring a field visit without line equipment in place	Parity or 4 days, whichever is less	No more than 10 days
C/O	Conversion Loop	Parity or 4 days, whichever is less	No more than 10 days
C/O	Provisioning Change to/from LP	Parity or 4 days, whichever is less	No more than 10 days
C/O	Port Only (simple)	Parity or 4 days, whichever is less	No more than 10 days
C/O	Disconnect Loop	Parity or 4 days, whichever is less	No more than 10 days
Field	Installation or Move requiring a field visit - any provisioning type (All Business Installations and Move orders require a field visit)	Parity or 11 days, whichever is less	No more than 20 days

N/A = Not Applicable

Complex Orders – The Provisioning Interval Metric for Complex Orders received on any given day is 90% of the Complex Orders within 30 calendar days, 98% of the Complex Orders within 45 calendar days, and no more than 2% of the Complex Orders on a case-by-case basis, evaluated monthly.

Special Complex Orders – The Provisioning Interval Metric for Special Complex Orders is no more than fifteen (15) days.

[4] For the purpose of assessing compliance with the Provisioning Interval Metrics set forth in this Table 2, "parity" for any ACS Simple Order Provisioning Category in a given month will be measured according to the ACS Parity Report for that same month, as forth in Section 4.A. of this Exhibit A.

C. Exceptions to Application of Provisioning Metrics and Missed Due Date Recurring Cost Credit

Notwithstanding anything to the contrary contained in this Performance Agreement, the Provisioning Interval Metric shall not apply to any Simple, Complex, or Special Complex Order meeting at least one of the following criteria: (i) the customer address is not included in ACS' records; (ii) ACS access to the GCI customer premises is required to complete the Order and such access is denied or limited; (iii) involves faulty GCI plant; (iv) no facilities are available and the Order is designated as a held order, provided that, "held orders" shall not include any Order for which a Due Date has been assigned; or (vi) GCI has requested, and ACS has granted, a specific Due Date to occur outside the Provisioning Interval Metric. The applicable Provisioning Interval Metric will apply to Orders for which GCI requests, and ACS grants, a specific Due Date to occur within the applicable Provisioning Interval Metric. Nothing in this Section 3.C. is intended to affect the application of the Missed Due Date Recurring Cost Credit as set forth in Section 5.B to any Order, provided, however, that notwithstanding the foregoing, the Missed Due Date Recurring Cost Credit set forth in Section 5.B. shall not be applied to any Simple, Complex or Special Complex Order that meets any of the criteria set forth in (i), (ii) or (iii) above.

4. Metric Compliance Reports

ACS will provide the following reports to GCI demonstrating its metric performance results for processing and provisioning of GCI Simple, Complex, and Special Complex Orders. ACS will not dispute the veracity of the monthly performance reports it has provided GCI, provided that ACS has the right to update and/or correct any monthly report provided to GCI in the ordinary course of business; provided, however, that ACS must provide any updated and/or corrected report within thirty (30) business days of the date the report was originally sent to GCI ("30-day correction period"), or at any time thereafter with mutual consent of the parties, which consent will not be unreasonably withheld. GCI may expressly rely on the accuracy of such reports should it be necessary to utilize such performance results as a factual basis in any proceedings relating to either party's performance under this Performance Agreement.

A. Parity Reports

ACS will provide to GCI a monthly Parity Report. This report will compare the number of GCI Simple Orders provisioned and the average days within which those Orders were provisioned with the number of ACS Simple Orders provisioned and the average number of days within which those Orders were provisioned, in each of the Simple Provisioning Categories, by market (e.g., Anchorage, Fairbanks and Juneau) (to determine the average intervals). The first monthly Parity Report is due on the last day of the first month following the Effective Date, and will report data beginning with the Effective Date. Thereafter, the monthly Parity Report for a given month is due by the last day of the following month.

B. Processing Reports

Simple Orders:

Daily Operational Report. ACS will provide GCI with daily Simple Order processing reports containing the following information: (1) Total number of lines ordered by GCI broken down by markets; (2) Order types; (3) ACS receive date; (4) the total number of batches received by ACS; and (5) the status for lines pending FOC from previous days. ACS will provide a revised report when discrepancies are identified. Daily Processing Reports will commence on the Effective Date.

Monthly Performance Report. ACS will also provide GCI a monthly performance report that will list for each day of the month, the number of Simple Orders received on that day and how many of the Simple Orders fell within and outside the Processing Interval Metrics. The first monthly Simple Order performance report will be due on the last day of the first month following the Effective Date, and will report data beginning with the Effective Date. Thereafter, the monthly Simple Order performance report for a given month is due by the last day of the following month.

Complex and Special Complex Orders:

Daily Operational Report. ACS will provide GCI with daily processing reports for Complex and Special Complex Orders containing the following information: (1) Total Complex and Special Complex Orders received by ACS broken down by market; (2) Order type; (3) ACS receive date; and (4) status for Complex and Special Complex Orders pending FOC from previous days. ACS will provide a revised report when discrepancies are identified. Daily Processing Reports will commence sixty (60) calendar days from the Effective Date.

Monthly Performance Report. ACS will also provide GCI a monthly performance report that will list for each day of the month, the number of Complex and Special Complex Orders, respectively, received on that day and how many of the Complex and Special Complex Orders, respectively, fell within and outside the Processing Interval Metrics. The first monthly Complex and Special Complex performance report will be due on the last day of the third month following the Effective Date, and will report data beginning with the first daily operational report issued for Complex and Special Complex Orders. Thereafter, the monthly Complex and Special Complex performance report for a given month is due by the last day of the following month.

C. Provisioning Reports

Simple Orders:

Daily Operational Report. ACS will provide GCI with daily Simple Order provisioning reports. The reports will be provided daily or weekly based upon GCI's preference and will contain the following information broken down by ACS Simple Order Provisioning Category: (1) telephone number/service instance; (2) all Simple Orders completed within a given

timeframe; (3) receive date; (4) create date; (5) Due Date; (6) Work Completion Date; and (7) the duration between the create date and the Work Completion Date. Daily Provisioning Reports will commence thirty (30) days after the Effective Date.

Monthly Provisioning Report. ACS will also provide GCI a monthly provisioning report that will list for each day of the month the number of Simple Orders received on that day and how many of those Orders fell within and outside the Provisioning Interval Metrics. The first monthly Simple Order provisioning report will be due by the last day of the first month following the Effective Date, and will report data beginning with the Effective Date. Thereafter, the monthly Simple Order provisioning report for a given month is due by the last day of the following month.

Complex and Special Complex Orders:

ACS will provide GCI a monthly provisioning report that will list separately for the reporting month and the preceding month, the number of Complex and Special Complex Orders, respectively, received for the month and how many of the Complex and Special Complex Orders, respectively, fell within and outside the applicable Provisioning Interval Metrics. The first monthly Complex and Special Complex provisioning report will be due on the last day of the third month following the Effective Date, and will report data beginning with the date the Provisioning Interval Metric for Complex and Special Complex Orders went into effect in accordance with Section 3. Thereafter, the monthly Complex and Special Complex provisioning report for a given month is due by the last day of the following month.

5. Recurring Cost Credit

A. Processing and Provisioning Recurring Cost Credit

If a Processing Interval Metric for any Simple, Complex, or Special Complex Order is missed, ACS will allow and GCI will accept, on a per Order basis, one month's service at no recurring charge for the missed ordered service. If a Provisioning Interval Metric for any Simple, Complex, or Special Complex Order is missed, ACS will allow and GCI will accept, on a per Order basis, one month's service at no recurring charge for the missed ordered service (or two months if the Processing Interval Metric is also missed for the Order).

B. Missed Due Date Recurring Cost Credit

In addition to the credits set forth in Section 5.A., if ACS misses a Due Date for any Simple, Complex, or Special Complex Order (meaning that the Work Completion Date and the Due Date are not the same day), ACS will allow and GCI will accept, on a per Order basis, one month's service at no recurring charge for the missed ordered service. Simple, Complex and Special Complex Orders that are the subject of a missed Due Date will be given priority processing to reschedule the Order. Notwithstanding the foregoing, the Missed Due Date Recurring Cost

Credit shall not apply to a given Order if: (1) ACS provides notice to GCI no later than noon of the day preceding the Due Date that such Due Date will be missed; and (2) ACS establishes and meets the new Due Date within the applicable Provisioning Interval Metric for that Order.

C. Issuance of Recurring Cost Credits

ACS will issue GCI Processing and Provisioning Recurring Cost Credits and Missed Due Date Recurring Cost Credits once each month as a credit on the monthly Interconnection statement. Credits accrued for a given month will be applied to the second bill issued subsequent to the month in which the metric compliance report, in which the non-compliant event was reported, was issued. In the event that a credit adjustment is required pursuant to a report update and/or correction implemented outside of the 30-day correction period in accordance with the terms of Section 4, such adjustment will be applied to the next monthly Interconnection statement issued after the updated and or corrected report is issued to GCI. ACS will, on a per line basis, summarize the issued recurring cost credits on an attachment to the monthly Interconnection statement.

6. Dispute Resolution

A. Remedies for Breach of Attachment X

The parties agree that breach of the provisions of this Attachment X by one party will leave the other party with no adequate remedy at law. Notwithstanding any provision of the Settlement Agreement or any applicable interconnection agreement between the parties, pursuit of one or more remedies to which an injured party may be entitled at law or equity for breach or threatened breach by the other party of any provision of this Attachment X shall not bar pursuit of any other remedy for the purpose of enforcing the provisions of Attachment X.

B. Negotiation and Escalation of Disputes

Notwithstanding the rights and remedies set forth in Section 6.A. above, the Parties agree to attempt to resolve any dispute between the Parties arising out of, relating to, or in connection with this Attachment X, or the breach, termination or validity thereof (collective, a "Dispute"), prior to pursuing any available remedy at law or equity, in accordance with the following dispute resolution procedures.

(i) The party raising a Dispute shall deliver a written notice of Dispute to the other party's operational manager responsible for performance of this Agreement, setting out with specificity the matter(s) in Dispute. Within five (5) business days after receipt of a notice of dispute, the receiving party shall respond in writing. The operations managers for each party responsible for performance of this Agreement shall attempt in good faith to resolve the Dispute for a period of fifteen (15) calendar days from the date of the notice of dispute. If the Dispute is not resolved, as reflected by a written agreement between the parties, within such fifteen (15) day period, the Dispute shall be escalated upon written notice of escalation to an executive representative of each party.

(ii) Upon receipt of a notice of escalation by either party, an executive representative of each party (vice president or other executive with a similar or higher level of authority) shall attempt in good faith to resolve the Dispute for a period of thirty (30) calendar days. If the Dispute is not resolved, as reflected by a written agreement between the parties, within such thirty (30) day period, either party may pursue any available remedy as set forth in Section 6.A. with respect to such Dispute.

C. Application Only to Attachment X

Notwithstanding anything to the contrary set forth in this Section 6, this Attachment X or the Settlement Agreement, the parties acknowledge and agree that nothing in this Section 6, this Attachment X or the Settlement Agreement shall be deemed to terminate, amend or otherwise modify any dispute resolution procedure contained in any interconnection agreement now or in the future for matters unrelated to Order processing and provisioning interval metrics, recurring cost credits and the related reporting requirements set forth in this Attachment X. Further, this Section 6 shall not apply to any breach or dispute relating to the matters set forth in the Settlement Agreement, which disputes shall be resolved in accordance with the terms of the Settlement Agreement. Likewise, the parties agree that, subject to Section 6.B. above, nothing in this Attachment X, the Settlement Agreement, or any interconnection agreement shall be deemed to waive, limit, or affect any remedy available at law or equity to enforce the provisions of this Attachment X.

NECA Direct Case

WC Docket No. 04-372

Exhibit 6

Exhibit 6
Figure 1

Network Configuration - Fairbanks, AK

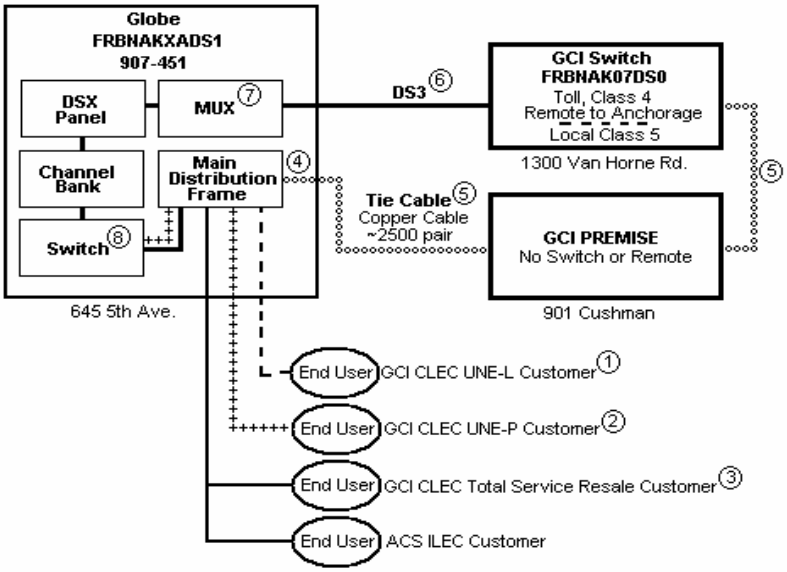

Fairbanks Network Configuration Notes

1. UNE-L loops - Interconnection Agreement, Part C, Attachment I, Section 1.1.1.
2. UNE-P loops, network interface device, end office switching and, where applicable, direct transport – Interconnection Agreement, Part C, Attachment I, Sections 1.1.1; 1.1.2.d; 1.1.5.b; and 1.1.7.
3. Total service resale loops – Interconnection Agreement, Part C, Attachment II and Part C, Attachment I, Section 1.9.
4. Entrance facility – Interconnection Agreement, Part C, Attachment I, Sections 1.2.5 and 1.2.7.
5. GCI provided local facilities to extend UNE-L loops to GCI switch via a virtual collocation arrangement.
6. Access entrance facilities for IXC interexchange traffic from/to ACS end users, CLEC's total service resale end users and CLEC's UNE-P end users – Tariff F.C.C. No. 5, Sections 6 and 7. ACS provided UNE transport to GCI local service end users – Interconnection Agreement, Part C, Attachment I, Section 1.3.2.
7. Access DS3/DS1 multiplexing for IXC interexchange traffic from/to ACS end users, CLEC's total service resale end users and CLEC's UNE-P end users – Tariff F.C.C. No. 5, Sections 6 and 7. ACS provided UNE DS3/DS1 multiplexing supporting GCI local service end users - Interconnection Agreement, Part C, Attachment 1, Section 1.4.2.
8. Access end office elements for IXC interexchange traffic from/to ACS end users and CLEC's total service resale end users – Tariff F.C.C. No. 5, Section 6.

Exhibit 6
Figure 2

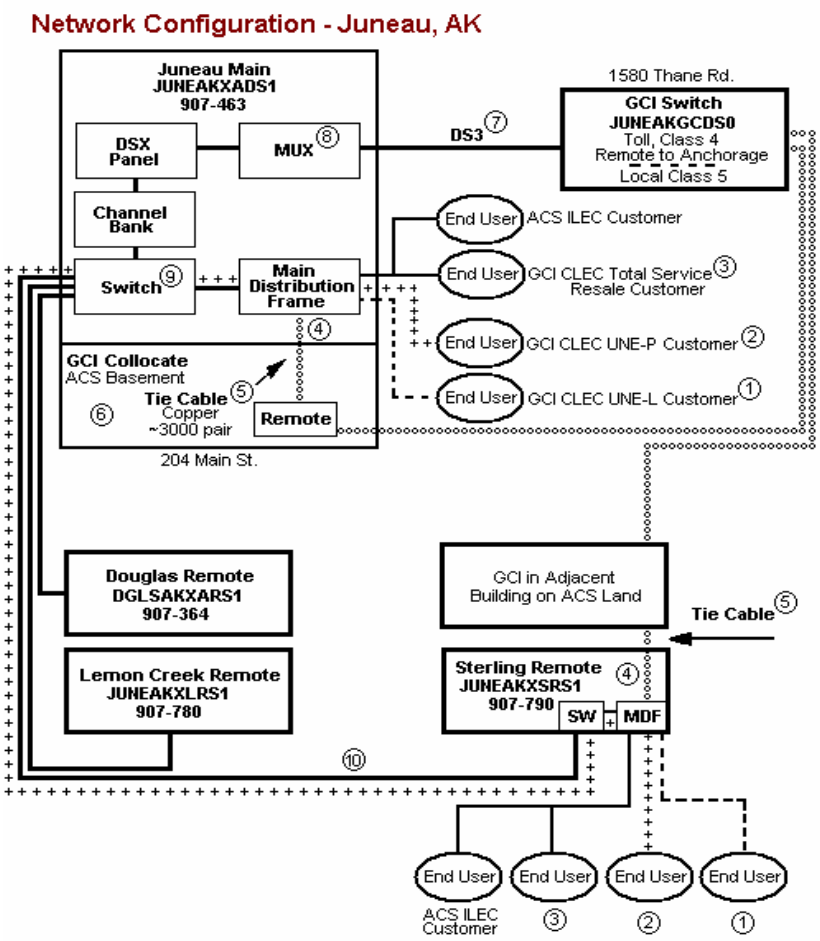

Juneau Network Configuration Notes

1. UNE-L loops - Interconnection Agreement, Part C, Attachment I, Section 1.1.1.
2. UNE-P loops, network interface device, end office switching and, where applicable, direct transport – Interconnection Agreement, Part C, Attachment I, Sections 1.1.1; 1.1.2.d; 1.1.5.b; and 1.1.7.
3. Total service resale loops – Interconnection Agreement, Part C, Attachment II and Part C, Attachment I, Section 1.9.
4. Entrance facility – Interconnection Agreement, Part C, Attachment I, Sections 1.2.5 and 1.2.7.
5. GCI provided local facilities to extend UNE-L loops to GCI switch via an adjacent collocation arrangement.
6. Physical collocation in basement of Juneau-Main host office and adjacent collocation next to Sterling remote office – Interconnection Agreement, Part C, Attachment I, Section 1.2.1.
7. Access entrance facilities for IXC interexchange traffic from/to ACS end users, CLEC's total service resale end users and CLEC's UNE-P end users – Tariff F.C.C. No. 5, Sections 6 and 7. ACS provided UNE transport to GCI local service end users – Interconnection Agreement, Part C, Attachment I, Section 1.3.2.
8. Access DS3/DS1 multiplexing for IXC interexchange traffic from/to ACS end users, CLEC's total service resale end users and CLEC's UNE-P end users – Tariff F.C.C. No. 5, Sections 6 and 7. ACS provided UNE DS3/DS1 multiplexing supporting GCI local service end users - Interconnection Agreement, Part C, Attachment 1, Section 1.4.2.
9. Access end office elements for IXC interexchange traffic from/to ACS end users and CLEC's total service resale end users – Tariff F.C.C. No. 5, Section 6.
10. Access tandem switched transport elements for IXC interexchange traffic from/to ACS end users and CLEC's total service resale end users – Tariff F.C.C. No. 5, Section 6.