relevant market, the ability of new firms to enter and expand, and the prospects for the unilateral exercise of market power all are well known central elements in such an analysis.[65]

(53) In adopting this standard, it is especially important to be clear on the meaning of two of the phrases in this proposed standard. First, competition may be "lessened" by either reduced supply from already existing CLECs in a market[66] *or* by reductions in the propensity to enter by prospective entrants. Also, in this regard, we note that the standard does not require non-provision of the requested element "to substantially lessen competition" but rather requires that the effect of non-provision "may be substantially to lessen competition." Thus, a clear and correct application of the standard does not **require** a demonstration that a lessening of competition occur, but rather that it **may** occur. Similarly, a correct application of the standard does not require that the magnitude of the impact on competition, should it occur, be "substantial," but rather simply that the effect is "to lessen competition." Second, the phrase "tend to create a monopoly" absolutely cannot be taken in isolation to mean that there is no problem with an action (here the denial of UNEs) so long as it does not result in only one provider in a market. Any action, here the withholding of one or more network elements, the effect of which "may be substantially to lessen competition" is prohibited. Thus, where the withholding of a UNE may "tend to create a monopoly" in any given relevant geographic market may be seen as *sufficient* to create a finding of impairment, it must be clear that the result of "monopoly" is not a necessary condition for the finding of impairment. Rather the necessary condition is simply that sufficient economic and operational barriers exist such that, but for the provision of the requested element, the effect may be substantially to lessen competition. Equivalently, wherever the failure to provide the

[65] The tools and methods to discern when an activity such as a merger, price discrimination or exclusive dealing will lead to the prospect for lessening competition is part of the ongoing practice of antitrust enforcement officials. In general, see the Department of Justice homepage. http://www.usdoj.gov/atr/. For a specific recent example in which the Department used standard antitrust economic tools to identify a situation in which there was likely to be lessening of competition, see United States v. Syngenta AG, Astrazeneca PLC, Koninklijke Cooperatie Cosun U.A., and Advanta B.V., http://www.usdoj.gov/atr/cases/f205100/205199.htm

[66] Reductions in the supply of extant CLECs in a market may be brought about by the emergence of, say, absolute cost advantages, that may accompany the elimination of UNE-based provision of network elements wherever alternative access to such elements is not available on costs terms akin to those enjoyed by the ILEC.

requested element on an unbundled basis may have the effect of increasing the market power by the incumbent relative to the case of provision of the element, an impairment finding is warranted.

(54) That said, this standard has several attractive features:

- The standard retains the Commission's focus on economic and operational barriers to entry (i.e., "structural impediments to competitive supply") that the court found to be an improvement from previous attempts by the Commission to establish an impairment standard.
- The standard directly responds to the USTA II court's criticism of the TRO-based impairment standard as "too open ended" by bringing to the table an accepted body of economic tools to discern situations in which the effect of non-provision of the element will have no effect on competition from situations where competition may be adversely affected.[67]
- The standard provides a means of resolving the "special access paradox" by more clearly focusing the impairment concept on the harm—or not—to competition that results from the denial—or not—of unbundled network access to requesting carriers. Specifically, because the USTA II court ruled special access was not "irrelevant" to the impairment issue, the Commission must, as part of the standard, allow for the possibility that in *certain circumstances* competition is not impeded if only an alternative ILEC offering, here special

[67] It is important to indicate that our approach eschews the earlier Commission position that unbundling should not be used to "remove an incumbent LEC's market power in the retail market" (TRO, ¶103). In particular, the present standard is not meant to remove or eliminate market power in the retail market, but rather is designed to enable competition. (See our discussion *supra* of this difference.) The consequence of this difference is that the proposed impairment standard is simultaneously squarely consistent with the Telecommunications Act's competition-enabling goals and is also deferential to the Act's de-regulatory aims by not dictating unbundling with the purpose of eliminating the incumbent's market power through regulatory fiat. Specifically, the question addressed by the instant standard is whether sufficient barriers exist such that—but for the provision of the UNE on an unbundled basis—the failure to require unbundling would impair or retard competitive supply. The determination, in turn, of whether competitive supply has been retarded or impaired hinges on whether failure to provide the element may substantially have the effect of lessening competition or tending to create a monopoly. This logically does not require unbundling up to the point of removal of the incumbent's market power in the retail market. We note, however, that in our opinion an impairment standard that more forcefully turns on the presence of workable or effective competition is consistent with the procompetitive goals of the Act.

access (and not UNE access at TELRIC rates) is available. At the same time, the court recognized the incentives of the ILEC "to set the tariff price as high as possible" and that it is undesirable to have a standard that allows ILECs to avoid unbundling requirements by simply offering the element at somewhat substantially greater than TELRIC rates.[68] Accordingly, the Commission must strike a balance that simultaneously reduces the prospects that the ILECs use their own tariffed offerings such as special access to circumvent the Act's unbundling requirements, while also reducing unnecessary unbundling requirements (viz., where the consequence of failure to do so does not "impede competition.") The proposed impairment standard does exactly this. Specifically, by focusing on the impairment standard more tightly on whether the effect of failure to provide the requested element "may be substantially to lessen competition, or to tend to create a monopoly," the standard ensures that the ILECs cannot use their own tariff offerings (e.g., special access) to impede competition by denying unbundled access where there may be deleterious competitive effects from doing so. At the same time, the same language in the proposed standard ensures that where the effect of failure to provide the requested element does not lessen competition or tend to create a monopoly—as in the case of wireless carriers' access to dedicated transport—then no unnecessary unbundling is required.[69] Importantly, as described in Section VII below, a variety of evidence from the TRO, state proceedings, publicly available sources, and CLEC interviews indicates that the same standard that in this case leads to the presumption that wireless carriers' access to dedicated transport is unimpaired strongly supports the conclusion that the availability of special access does not mitigate the impairment of wireline CLECs without access to dedicated loops and transport.

---

68 The court recognizes that at some elevation of rates above TELRIC, competitors are impaired and that adjudication of when such a threshold has been crossed "might raise real administrable issues" for the Commission. USTA II at p. 33.

69 We assume in this statement, arguendo, USTA II court's suggestion that competition in wireless markets is today able to "flourish" even though wireless carriers are denied UNEs access and are made to pay special access rates for dedicated transport. We have not conducted an independent assessment of the ultimate merits of this assumption.

- The standard is squarely consistent with the USTA II court's interpretation that the Telecommunications Act's purpose is "to stimulate competition" by focusing on "structural impediments to competition."
- The standard provides a sound platform for the establishment of specific impairment criteria (tests) that are sufficiently discerning to identify reasonably cases of impairment and non-impairment today, while simultaneously being sufficiently dynamic enough to accommodate the evolution of the industry structure with its consequent changes in the factual circumstances surrounding impairment.

VI. MARKET DEFINITION

(55) As noted by the USTA II court, "Any process of inferring impairment (or its absence) from levels of deployment depends on a sensible definition of the markets in which deployment is counted."[70] We agree and, in fact, under the revised impairment standard, the issue of market definition becomes, as in the antitrust arena, central to sound policy decisions. In the TRO, the Commission offered a compelling case for a "route by route" specification of the relevant geographic market for dedicated loops and transport.[71] The USTA II court, while not finding this market definition unlawful, did raise a couple of issues regarding the route by route analysis of dedicated transport.

(56) Specifically, the court suggested that the Commission "cannot simply ignore facilities deployment along similar routes when assessing impairment." Indeed, to press its point, the court identified the possibility of three points A, B, and C that are all in the same geographic area and "are similarly situated with regard to 'barriers to entry.'" In this case, the issue the Court raises is whether evidence of more abundant deployment on one route-pair might provide evidence that, despite a lower presence of current competitors, the other route is also unimpaired. As the court acknowledges, the Commission has, in fact, already pointed out why such higher deployment on one route is not sufficient to make a non-impairment finding along other routes.[72] The court's admonition, though, is that the Commission cannot ignore such deployment. We note, however, that to the extent that the correct market definition is, as we believe and the Commission previously found, route by route, the fact that these routes are different markets means that they cannot automatically be treated the same. Thus, the assumed hypothetical proffered by the court that the markets are "similarly situated with regard to the barriers to entry" is not a valid assumption, because the routes have been determined to be in different markets, and thus may not be similarly situated with respect to the height of entry barriers. Indeed, the absence of observed competitors on one of the route–pairs may well provide evidence that the two route-pairs are not similarly

[70] USTA II, p. 15.

[71] TRO at ¶402.

[72] TRO at ¶401.

situated, and that unobserved barriers to entry exist on that route-pair. In that case, to place too much weight on deployment in "other" routes is contrary to the court's requirement that the Commission perform a "nuanced" and "granular" analysis rather than make sweeping generalizations.

(57) Also, the court suggested that the Commission has not yet explained whether the error costs (both false positives and false negatives) associated with a route by route market definition are likely to be lower than the error costs associated with alternative market definitions. This evokes two reflections. First, it is necessary to ask how likely it is that the Commission correctly identified the geographic market as route by route.[73] If the Commission employed sound judgment in its original choice of market definition, the probability of either false positives or false negatives falls and the associated error costs become *de minimis*. Second, given the possibility, however remote, that the Commission has erred in the determination of a route by route market definition, what are the policy consequences of false positives or false negatives under the impairment standard?

(58) The standard economic approach to geographic market definition draws upon the key concept of geographic demand-side substitutability.[74] Specifically, one begins by defining the smallest area that might be considered and asking the question, "Could a hypothetical monopolist that was the only present and future producer in this 'market' profitably impose a small but significant and non-transitory increase in price, holding constant the terms of sale for all products produced elsewhere?" If the answer is "yes," then the relevant market has been identified (because a monopolist over a well-defined, relevant market could and would impose such a price increase.) Alternatively, however, the answer may be "no" (i.e., the price increase would be unprofitable) because of consumers' willingness and ability to substitute for services offered outside of the proposed market. In this case, the proposed market definition must be expanded and the question re-posed. The process continues until the answer is 'yes."

---

[73] See footnote 1536 of the TRO, which states that "we define the relevant market for transport as route by route, and the relevant geographic market for enterprise loops as customer by customer."

[74] This approach is described in greater detail in the U.S. Department of Justice's and the Federal Trade Commission's Horizontal Merger Guidelines, Issued April 2, 1992, Revised April 8, 1997.

(59) In the case at hand, the demand-side geographic substitutability for telecommunications services, such as those provided by enterprise loops and transport is extremely low. Consider for instance, the consequence of a hypothetical monopolist over an enterprise loop between two points A and B. In this instance, the market definition exercise requires us to ask the question whether, in response to a small but significant and non-transitory price increase, the customer would substitute telephone calling to an alternative route, say from A to another point C. Such substitutability is extremely unlikely. Consequently, the Commission's determination of customer-by-customer and route-by-route markets for enterprise loops and transport, respectively, is entirely sound and highly unlikely to give rise to "error costs."

(60) The second issue is whether, given some possibility, (shown here to be remote) of error in identifying the relevant market, what are the policy costs associated with any false positives and false negatives? This matter is straightforward. In the case at hand, because demand-side geographic substitutability is virtually zero for telecommunications services, the only possible source of error costs would spring from a failure to account for the supply-side (i.e., entry and entry conditions) at *some* stage in the analysis. In particular, a correct analysis of impairment must account for the supply-side either by explicitly accounting for any geographic supply-side substitutabilities (across different routes) in the market definition process or, alternatively, by accounting for supply-side-based entry conditions in the specific impairment test. While both approaches may, theoretically, yield the same results, the critical factor that will reduce the error costs is that the Commission account for this supply-side substitutability at some stage.

(61) In the case at hand, the Commission has done so by choosing to use a conventional demand-side substitutability approach to the market definition process and to then to include supply-side (entry) conditions in the impairment test. Both the specification of the Impairment Standard (discussed in V.3 above), which focuses on economic and operational barriers to entry and the Impairment Test (discussed in VII below), which focuses on a presumption that with enough actual competitors in a given market entry barriers have been overcome, include a consideration of entry and barriers to entry (the supply-side). Consequently, as the court seeks, the error costs associated with the Commission's impairment standard and test have been minimized.

(62) Beyond this assurance, yet another consideration also reveals that the costs associated with alternative approaches to market definition are likely to be quite high. Specifically, as the court has recognized, the supply-side conditions associated with entry into any particular route/market are likely to be particularly nuanced. Consequently, any attempt to incorporate such nuanced considerations at the market definition stage will prove to be particularly unwieldy and administratively inefficient. Some markets, those with limited supply-side substitutabilities, would be judged route-pair markets for purposes of applying the impairment test, while other areas with higher supply-side substitutabilities would be judged to be larger market areas for purpose of the impairment test. Both the Commission and the court must surely see the prospect of such a jumbled menagerie of geographic market sizes as administratively impractical. In sum, the market definition chosen by the Commission, which focuses on demand-side substitutability is perfectly sound, and because supply-side considerations are taken into account by the Commission, the route by route and customer by customer geographic market definitions adopted by the Commission are economically sound.

VII. THE IMPAIRMENT TEST

(63) As with any guiding standard that is to have substantial discerning capabilities, the impairment standard we identify requires an accompanying practical test or sets of tests that can be readily applied to determine—with sufficient granularity—when a requesting CLEC is, in fact, impaired without the provision of unbundled access to a particular element. In that spirit, it is important to note at the outset that every test that satisfies the standards of administrative feasibility for the Commission will necessarily create the possibility of error costs associated with "false positives" and "false negatives." Specifically, any test, short of a full-blown, market-by-market inquiry of the nuanced barriers that exist in that specific geographic market and corresponding detailed analysis of the prospects for the lessening of competition that may result from the failure to provide UNE access will run the risk that "impairment" is found when, in fact, the truth (as judged with perfect information against the impairment standard) is "non-impairment." Similarly, any administratively feasible test also runs some risk of a finding of "non-impairment" when the truth is "impairment." In this section, then, we discuss the process by which one may logically proceed from the impairment standard outlined above to an impairment test in such a way that the Commission can be as confident as possible that its impairment test is both administratively feasible and minimizes unavoidable error costs.

(64) The error costs associated with an impairment test are not symmetric. Specifically, the costs associated with establishing an impairment test with high false readings of non-impairment (when, in truth, impairment exists) are asymmetrically higher than the error costs associated with false readings of impairment when "non-impairment" exists. If a finding of non-impairment is made when in fact a CLEC is impaired, then competition will not occur, with the attendant higher prices and reduced service for customers. On the other hand, if a finding of impairment is made when in fact the CLEC is not impaired, all that happens is that the CLEC can compete using either UNEs or its own facilities. The CLEC still has to pay the cost of the UNE it purchases, so the ILEC is unharmed. Indeed, given the choice between losing a customer to a CLEC with its own facilities or losing the customer to a CLEC that buys UNEs from the ILEC, the ILEC should prefer the latter.

(65) The process of determining whether impairment exists, then, involves a fact-specific and data intensive inquiry into the issue of whether, absent the provision of the element, new entry into local exchange markets is retarded or impaired. A well-established body of economic thought can fortunately, guide the basic approach to this exercise on the subject of barriers to entry and barriers to expansion and their associated competitive consequences. Specifically, where economic and operational barriers to entry and expansion for new entrants in specific local exchange markets are formidable and where the impact of denial of a requested element may substantially be to harm competition, then a finding of impairment is warranted.

(66) In that regard, there are two basic approaches to determining the strength of barriers to entry. Specifically, the economic literature has identified a number of underlying structural and behavioral determinants of both the presence and height of barriers to entry into a market. These determinants include, *inter alia*, consideration of the extent of sunk costs, economies of scale, first-mover advantages and absolute cost advantages of incumbents in the market.[75] The TRO gives appropriate attention to these barriers and the USTA II court decision found nothing critical to say about this focus. The second approach is to perform a detailed assessment of the actual level of entry into a market. In certain circumstances, discussed below, the level of entry may be sufficiently high and sufficiently informative about prospective entry that one may conclude that the magnitude of entry barriers is low.

(67) The TRO specified a two-step process that encapsulates both approaches to the assessment of the presence of barriers to entry. Specifically, the Commission examined the presence and magnitude of economic and operational barriers to entry and concluded that entrants were in general impaired in their ability to serve local exchange markets. Given the large number of markets involved when using the proper route-specific market definition, and the USTA II court's finding that a granular determination cannot be delegated to the states under the 1996 Telecommunications Act,[76] the Commission must turn to a second approach which is

---

[75] See our discussion, supra, and the extended discussion in the TRO.

[76] The USTA II decision said that the 1996 Telecommunications Act directed the Commission to make the determination of impairment, leaving open the question of whether the states could be the finders of fact in a triggers test, submitting the results of that fact finding to the Commission for determination of impairment by

administratively less unwieldy to determine whether CLECs are impaired on a route-specific basis.

(68) To make this route-specific determination, the Commission adopted in the TRO a so-called "triggers test," which simply assesses the magnitude of existing competitors' entry. If the magnitude of entry is sufficiently robust and unequivocal in the triggers analysis, then the more detailed, complete assessment of the magnitude of entry barriers can be avoided. The Commission can approach the task of finding exceptions to nationwide impairment in a number of ways. It is critical, however, that whatever method it adopts takes account of the entry barriers facing CLEC entrants in the transport market. As we discuss below, there are significant economies of scope and scale in dedicated transport markets, and evidence of **possible** competition is not the same as evidence that the CLECs can overcome the barriers to entry. Therefore, in the absence of unambiguous information about the presence of **actual** competitors, the Commission must rely on proxies or surrogates that correspond to the size of the market and the barriers to entry faced by the CLECs. In the state proceedings under the TRO, the ILECs proposed counting paired fiber-based collocations as one such proxy. In this Declaration, we discuss how this approach would need to be refined if it were to be used as the proxy. The Commission should compare this approach to other methods proposed by the parties, and select the method that corresponds as closely as possible to the underlying structure of the individual markets as possible.

(69) The Commission's findings in the TRO with respect to impairment of DS-1, DS3, and dark fiber loops and transport are generally sound. And indeed, additional considerations from state proceedings, from the interview process,[77] and from publicly available data sources continue to support the Commission's findings. Nevertheless, before the Commission could use the trigger conditions established in the TRO, it is necessary to make some modifications to those conditions. We will explain the rationale for these modifications and also discuss how they conform to the impairment standard we are proposing. We emphasize, however, that this method of assessing actual entry may not be the only or even the best method. We

the Commission.

[77] For this section, our interviews included CLEC personnel who are responsible for network engineering for their respective companies.

present a detailed analysis of the Commission's trigger test here only because it is the one most developed in the proceedings at the Commission and in the states. As we receive additional proposals by other parties, we will analyze them for conformance with our proposed impairment standard.[78]

VII.1. Loops

(70) As a general matter, the record in the TRO proceeding demonstrates that CLECs have limited presence in the high capacity loop market.[79] The CLECs have plant installed to only a small fraction of the nearly three million commercial buildings in the United States. Indeed, the TRO reports that data from both the ILECs and the CLECs shows that between 95 and 97 percent of the nation's commercial office buildings are not being served by *any* competitor-owned fiber loops.[80] For example, AT&T has stated that it has only 6,000 buildings connected to its local network via its own local loops—only about one half of one percent of the total buildings nationwide. This level of "self-deployment" however, certainly overstates the competitive capacity of such facilities because these statistics ignore the fact that CLECs often only have "fiber to the floor" arrangements, which prevents them from serving additional customers in the building without significant additional expense for multiplexers and cross connects.[81] Consequently, the competitive footprint that has emerged since 1996 and its prospects for expansion in the near term are largely reliant on the presence and availability of unbundled loop access. Indeed, there are a variety of economic and operational barriers that, in the absence of UNE-based access to dedicated loops will create the very real prospect of lessening competition. This lessened competition, in turn, creates the real prospect of a variety of deleterious consequences including reduced

---

78 The QSI report filed on October 4, 2004 by CompTel/ASCENT et al demonstrates that the number of actually deployed lop and transport facilities by CLECs is minimal, indicating the Commission has more than sufficient justification to make a determination of national impairment for these facilities at the capacity limits adopted in the TRO without additional trigger tests.

79 See TRO, at ¶¶298-301.

80 TRO, footnote 856.

81 See, e.g., Declaration of Michael E. Lesher and Robert J. Frontera on Behalf of AT&T Corp. at p. 18.

customer choice, higher prices, reduced competitive pressure on ILECs to reduce costs, and less pressure for innovation and new services.

(71) As the Commission found, there are substantial costs in laying fiber to a building, including the cost of the cable and conduit, as well as the cost of digging the trench to contain the conduit.[82] According to estimates cited in the TRO, trenching for conduit, which most business loops would require, costs from $17 to $30 per foot in suburban areas and from $70 to $100 per foot in urban areas,[83] while connecting a building to an existing transport network, including the fiber and the necessary electronics, averages about $250,000.[84] Because of these high sunk costs and significant scale economies, any carrier installing a fiber loop will be likely to lay fiber of sufficient size to meet expected demand, since it is more economical to "warehouse" spare capacity (or "dark fiber") than to dig up the street again later to add capacity. Since the ILECs have already laid fiber to most if not all of the commercial buildings in the United States, they have both sunk cost and first-mover advantages over any CLEC attempting to enter the market for dark fiber loops.

(72) In light of these facts, the Commission in the TRO made a sensible nationwide finding of impairment with respect to dark fiber loops. Installing a dark fiber loop into a building requires significant investment in the structure required to get the loop into the building. For a 500-foot loop in an urban area, the minimum costs of trenching under WorldCom's estimate would be $35,000, without considering the costs of the fiber cable itself or the expense for obtaining the right of way, let alone the costs of the cross connects and multiplexers that would be required to actually provision a loop.

(73) Comparing the revenue opportunity for DS-1 and DS-3 loops to the high sunk costs of laying fiber, the Commission also found similar impairment in the provision of DS-1 and DS-3 loops. However, recognizing that (1) the revenue opportunities for OCn loops were much higher than for DS-1 and DS-3 loops; (2) that OCn level customers were more willing

---

82 TRO at ¶312.

83 See WorldCom Comments at pp. 74-75.

84 See ALTS Comments at pp. 56-57; WorldCom Comments at pp. 74-75.

to sign long-term contracts that committed to significant revenue streams; and (3) that due to their business planning sophistication, such customers were more able to handle any service disruptions that might occur, the Commission found that carriers were not impaired with respect to any loops at or above an OC3 level.[85]

(74) Along with its nationwide finding of impairment for all but OCn loops, the Commission recognized that limited alternative deployment has occurred at particular customer locations "which could lead to a finding of no impairment for that loop type at that location."[86] Therefore, the Commission delegated to the states the fact-finding role to determine at which locations there was sufficient evidence to overturn the presumption of impairment. The Commission adopted a trigger approach, whereby non-impairment would be found at any specific location at which there were two facilities-based providers offering either retail or wholesale loop services of the relevant capacity on their own facilities. Although the USTA II decision overturned this delegation to the states, the Commission's approach to finding the exceptions to the nationwide determination is still valid and should be implemented at the federal level. Doing so would require the Commission to resolve issues that came up in the state impairment proceedings concerning these triggers.

(75) In the state proceedings launched under the TRO procedure, the ILECs identified specific buildings into which they believed CLECs had built loops. However, the ILEC claims as to the buildings served were overstated. The ILECs ignored or misrepresented the data the CLECs provided in response to discovery requests, used an inaccurate third-party database to identify buildings served by CLECs, claimed a CLEC providing one level of loop (e.g., DS-3) was able to provide all levels of loops, and ignored evidence that CLECs had loops to only a limited portion of a building.

(76) To determine that a CLEC truly is unimpaired in providing loop service at a particular bandwidth, the Commission also needs to determine how extensive the CLECs' access to the building is, and what barriers the CLEC faces to expand its facilities. The CLECs are

---

85 See TRO at ¶316. An OC3 is equivalent to 3 DS-3s.

86 See TRO ¶328.

often unable to gain access throughout the building, unlike the access typically given to ILECs, who bring their loops to a telecommunications closet or other common space in a building, and from there access customers throughout the building via riser cable. Building owners are often reluctant to allow additional carriers similar access to the building, effectively precluding competing carriers from being able to add additional customers within the building efficiently.[87] This first-mover advantage of the ILECs' means that they can provide loops to all customers within the building in a short time frame. Without access to the ILECs' loops at UNE prices, the CLECs will not be able to overcome the ILECs' first mover advantage in a timely manner, which will tend to reduce competition.

(77) In light of the generally sound analysis and overwhelming empirical evidence presented in the TRO regarding loop impairment, a straightforward proxy test (filter) for loop impairment can be stated as follows:

- OCn: No impairment.
- DS3 and DS-1: Nationwide impairment, except where it can be demonstrated that there are facilities owned and operated by at least two CLECs that provide service to similarly situated customers, where "similarly situated customers" is defined as customers in the same building who are receiving the same level (i.e., DS-1 or DS-3) of service or lower.
- Dark fiber: Nationwide impairment, except where two or more CLECs have constructed fiber to the building in which the customer is located. This is an easier standard to satisfy than the one used for DS3 and DS-1, because dark fiber will usually be leased by a CLEC that is planning to light the fiber at an OC-n level. A CLEC planning to light dark fiber and serve a customer with OC-n level service in a particular building will most likely be able to overcome the entry barriers associated with intrabuilding access and cabling.

[87] See TRO at ¶¶303-306.

VII.2. Transport

(78) In the TRO, the Commission required the ILECs to provide a dedicated transport network element, which was defined to be transmission facilities between ILEC switches or wire centers. Due to the substantial barriers to entry in the provision of this transport, primarily the high fixed and sunk costs of placing fiber,[88] the Commission found that CLECs were impaired on a nationwide basis without access to dark fiber, DS-3 (in groups less than 12), and DS-1 transport. However, the Commission also allowed the ILECs to make a showing in proceedings at the state commissions that these barriers to entry could be overcome on a route-specific basis, separately for each of these levels of transport, by demonstrating there were sufficient wholesale or self-provisioning providers of transport to overcome that nationwide finding. These triggers were established with different thresholds required for wholesale and self- providing CLECs. These requirements are summarized in the table below.

[88] TRO at ¶367.

Table 3: Summary of Current Self-Provisioning and Wholesale Triggers

	DS-1	DS-3	Dark fiber
Self Provisioning	**N/A**	**3 or more** • Operationally ready • Facilities terminate at each end of the route at a collocation arrangement at the ILEC premises	**3 or more** • Deployed own fiber or obtained on long-term lease • Facilities terminate at each end of the route at a collocation arrangement at the ILEC premises
Wholesale	**2 or more** • Operationally ready • Willing to provide immediately on a widely available basis • Requesting carriers can obtain access through a cross-connect	**2 or more** • Same as DS-1	**2 or more** • Same as DS-1 and DS3

(79) From an economic standpoint, the Commission's impairment determinations on dedicated transport in the TRO are consistent with the test proposed in this Declaration. The costs of deploying the fiber and structure used in the provision of transport are substantial, and both fixed and sunk. (These costs are detailed in the discussion *supra* on fiber loops, whose construction costs are similar on a per mile basis to the cost of a fiber ring.) No carrier is likely to deploy such facilities, especially in response to demand for a limited number of DS-1s or DS-3s, without the prospect of filling that facility. Indeed, all of the CLECs we interviewed indicated that a fiber build today requires a sufficient volume of existing business or a firm commitment from future customers, typically for at least a one-year term,

to a level of service that will ensure the investment will pay off. The ILECs have already deployed their fiber, and thus have a first-mover advantage, as well as not facing the up-front sunk costs that the CLECs must bear to build any transport link.[89] Therefore, the most compelling first step in proving non-impairment is the presence of abundant **existing competitive fiber-based transport** between two end-points in a network.

(80) In the state proceedings under the TRO, the ILECs attempted to overcome the nationwide finding by identifying office pairs that contained fiber-based collocations with the same CLEC in both offices. They then claimed that, absent specific evidence from the CLEC in question, that virtually all of the CLECs with the collocations were able to provide dark fiber, DS-3, and DS-1 transport on a wholesale basis. Hence, the ILECs argued that on routes where there were two CLECs with fiber collocations in the same two central offices (COs) all of the triggers were met.

(81) These ILEC attempts to demonstrate non-impairment in the state proceedings under the TRO were not based on any showing that the CLECs were offering the specific level—DS-1 or DS-3— of service on a wholesale basis, on the specific route in question. Rather, the ILECs made a leap of faith by ignoring or assuming away the costs associated with two crucial stages in constructing transport networks and making them operationally ready for wholesale business.[90] First, the ILECs assumed that if a CLEC was collocated at two separate ILEC central offices, then it was actively providing, or instantly capable of providing, circuits connecting these two offices. Second, the ILECs assumed that if a CLEC engaged in wholesaling any services and was also self-providing capacity on any transport route, then it should be counted as a wholesale provider on this route. Neither of these assumptions is correct, and as we now discuss, a truly workable and meaningful impairment

---

89 In addition, the ILECs have already received substantial pricing flexibility for their Special Access services. Thus, they are well able to respond to any competitive offering from other carriers.

90 This argument is inconsistent with the Commission's finding that there are substantial costs to provisioning DS-3 and DS-1 transport that render it uneconomic for carriers to self-deploy. At the DS-3 level, the Commission noted that scale economies made it unlikely that carriers could provision at the DS-3 level. (See TRO ¶386.) At the DS-1 level, the Commission correctly noted there are substantial additional costs to providing DS-1 service, such as additional multiplexers and back-office systems to handle ordering, provisioning, and billing.

standard must account for the additional barriers to entry associated with (1) provisioning and operating fiber-optic networks to make them capable of carrying traffic between two ILEC central offices and (2) wholesaling capacity at different levels to another CLEC.

VII.2.1. Transport cost structure and economics

(82) Transport networks consist of fiber rings, optical multiplexing equipment, electrical multiplexing equipment, patch panels, and cross-connect wires and cables. A schematic diagram of a hypothetical CLEC's transport network is shown below. The diagram shows the CLEC's equipment in the collocation space at ILEC Central Office #1 and corresponding equipment in the collocation space at ILEC Central Office #2. The CLEC's point of presence (POP) is also shown with the equipment necessary to light the fiber and establish cross-connections and multiplexing. The diagram also includes a box marking the POP of a second CLEC [labeled as "CLEC-BUYER"] that is the potential customer of the first CLEC.

Figure 2: Network diagram for dedicated transport

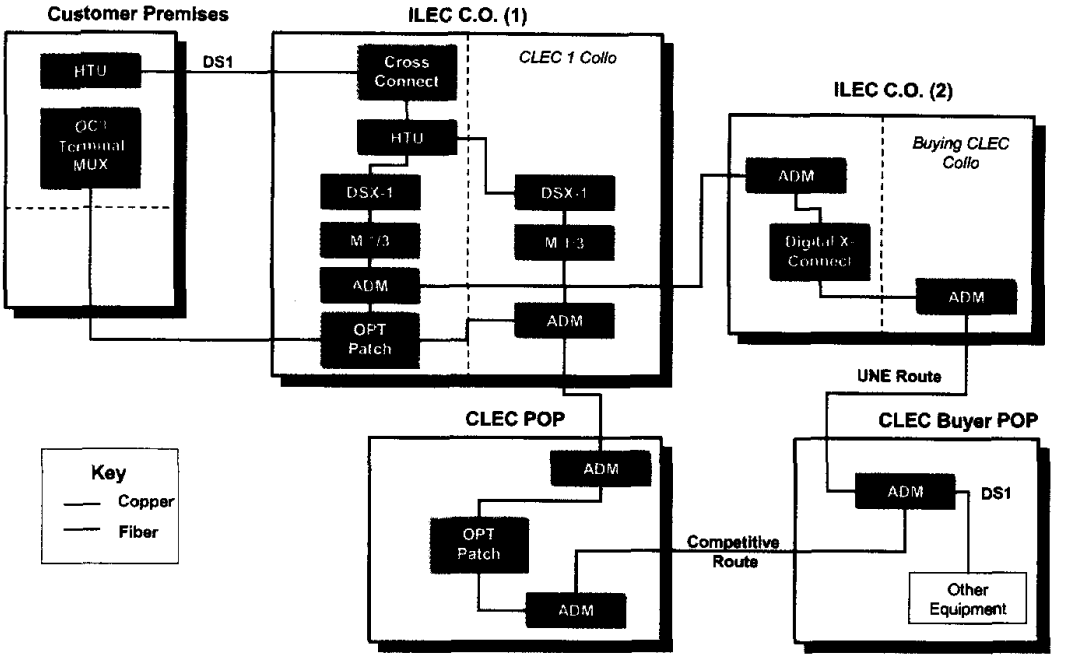

(83) Our analysis of these incremental entry barriers starts with the assumption that the CLEC's collocation in Central Offices #1 and #2 are properly identified. It is important to recognize, however, that most CLECs that deploy fiber to a collocation space are not using the fiber to carry traffic between multiple ILEC central offices.[91] Rather, the typical CLEC will build fiber to a CO in order to transport its own end-users' circuits (and any switched access traffic) back to its POP. Moreover, many CLECs do not connect all of their collocations to their POP on a single fiber ring.[92] Rather, as shown in our diagram, the two collocations in our hypothetical route are connected to the CLEC POP on two different fiber rings.

(84) In order to provide dedicated transport on the route between Central Office #1 and Central Office #2, the CLEC must cross-connect circuits from the two fiber rings. This will require the CLEC to install a new cross-connect if there is not one already in place. In addition, it will require the CLEC to augment any existing multiplexers or add additional ones. It is

[91] See, e.g., Declaration of Mike Duke on behalf lf KMC Telecom Holdings, Inc. filed in this docket, at ¶15.

[92] Id.

important to realize that there are economies of scale associated with much of this equipment, and hence the CLEC will not provide dedicated transport on this route unless it has a reasonable expectation of achieving sufficient scale in a short time frame. This means that there are barriers to entry in serving this market, and it is not reasonable for the Commission to assume away these barriers and treat the existence of a fiber-based collocating CLEC at each end of a transport route as outright evidence of non-impairment.

(85) Even if a CLEC overcomes these initial barriers to entry and turns up capacity on a particular route, this does not mean it is capable of providing wholesale service on a competitive basis with the ILEC's offering. We must keep in mind that if the **potential** wholesalers face cost disadvantages relative to the ILEC, then there will be a lessening of competition in the downstream markets in the event that UNE transport were unavailable. This would satisfy our definition of impairment.

(86) There are a number of sources for the entry barriers and cost disadvantages faced by potential wholesalers. We will demonstrate the significance of these cost disadvantages, which are greatest at the beginning and end of the route traversed when dedicated transport is sold on a wholesale basis by one CLEC to another. The first link on the route is the cross connection between the end-user's loop and the wholesaling-CLEC's collocation space. Even though the CLEC will already have cross-connections in place for its own traffic, it will need to add cross-connection capacity to handle other CLECs' business. There are also costs associated with augmenting an existing collocation to handle the power and space requirements of additional circuit equipment. Both categories of cost require significant up-front expenditures by the potential wholesaler, which create scale economies with respect to this important cost element in the process of wholesaling capacity.[93] Therefore, unless the expected demand for capacity is great enough to offset scale diseconomies, the potential wholesaler will not become an actual wholesaler.

---

[93] For example, in Pennsylvania, New Jersey, and Virginia, Verizon charges a $2,500 application fee to augment a collocation arrangement, in addition to a $1,095.88 one-time fee to augment the collocation space. See PA PUC Tariff No. 18, p. 55, BPU NJ Tariff No. 4, p. 55, and SCC VA Tariff No. 218, p. 55. In New York, Verizon also assesses a $1,334 non-recurring charge for augmenting power. See PSC No. 18, p. 27.

(87) These costs constitute barriers to entry that the CLEC must surmount prior to wholesaling interoffice capacity at a particular bandwidth or to an individual CLEC. It is appropriate to regard these costs as barriers to entry because they involve sunk costs, are subject to economies of scale, and to some degree are costs that the ILEC does not incur, (e.g., collocation and cross-connections to the loop network.).

(88) The last link in the circuit is to connect this dedicated capacity to the Buying-CLEC. It important to keep in mind that this CLEC's demand for interoffice dedicated transport is actually a derived demand for transport between the ILEC's central offices and its own POP. There are two possible ways for the wholesaling CLEC to make this connection with the Buying-CLEC. First, the wholesaling CLEC could connect to the Buying-CLEC's entrance facilities at Central Office #2. Second, the wholesaling CLEC could connect directly from its POP to the Buying-CLEC's POP. In either case, there are large costs associated with establishing this link.

(89) The first scenario of a handoff at Wire Center #2 has several problems. Certainly if the Buying-CLEC is not collocated at that Wire Center, the wholesaling CLEC may not be allowed to connect to the Buying-CLEC's entrance facilities. And even if the Buying-CLEC is collocated, the costs involved in establishing cross-connections between the wholesaler and the buyer will be burdened with diseconomies of scale and sunk cost. The second scenario, which involves a dedicated fiber link connecting the two CLECs, will not be cost-effective, unless there is a need for substantial capacity on this direct link. Based on discussions with CLECs, we have learned that smaller and mid-sized CLECs interconnect with few CLEC transport providers. This is due to the large economies associated with connecting two networks together. The scale economies are especially pronounced at small levels of demand. One CLEC will not be able to purchase transport at low capacity levels from another CLEC without incurring a substantial cost penalty associated with creating and operating an interconnection trunk between the two CLECs.

(90) The conclusion we draw from this analysis is that the existence of a CLEC with fiber-based collocations at both ends of a transport route does not guarantee this CLEC is now or can become an efficient provider of wholesale transport service to other CLECs. Therefore, a simple trigger approach that relies on the presumption of a wholesale market should not satisfy the impairment standard we discussed in Section IV. We will now discuss our

(93) Evidence of a given number of CLECs with fiber collocations on each end of a route ("paired collocations") is an indication that competition may exist at a DS-3 level or for dark fiber on this route. As we saw in the state proceedings, however, this is not the same as evidence that competition **actually exists** on the route.[95] As we discussed in the previous section, there are many barriers to competition that a CLEC must still overcome, prior to its entry into the wholesaling of DS-3 capacity or dark fiber on a particular route. Therefore, it may be possible to use a benchmark number of possible competitors, as indicated by the count of fiber based collocated carriers on a route, that would be reasonably equivalent (in an expected-value sense) to the desire benchmark number of "actual competitors" used in the TRO.

(94) Logically, the possible-competitor benchmark should exceed the number used—three—for self-provisioned firms used in the TRO. The reason is that self-provisioned firms must have already made the investment necessary to connect the two end-points of the circuit to be counted as actual, self-providers. By contrast, CLECs with paired fiber collocations most likely have not made that investment. It is reasonable to deduct at least some of the possible-competitor firms to account for the fact that some of these firms will not connect to the two ends, at any capacity level. In addition, we believe that the Commission underestimated the costs faced by a self-provider considering entering the wholesale market.

(95) All of these factors suggest that not all CLECs who have collocations in a pair of ILEC COs will be able to overcome the barriers to entry to providing wholesale service. Thus, to have the "expected value" of wholesale CLEC providers on a route to be two, as the Commission found sufficient in the TRO, the number of CLECs who have collocations in the two offices that define a route should be greater than two. If the ILECs choose to rely on only this evidence of wholesaling, there should be more than two CLECs required with collocations in the two offices. This will make it more likely that there are at least three CLECs that are actually providing service, or two who are likely to become wholesale providers on the route.

---

[95] See, e.g., Direct Testimony of Michael Pelcovits, submitted for MCI on January 9, 2004, in PA PUC Docket No. I-00030099, at pp. 89-90, noting that a CLEC collocation may exist solely for the purposes of providing loop concentration to its own switch, or for housing a DSLAM to provide DSL service to end users.

(96) However, the Commission should note even the presence of three competitors in a market may be insufficient to ensure a competitive outcome. For example, the Merger Guidelines, which outline the enforcement policy of the Department of Justice and Federal Trade Commission concerning horizontal acquisitions and mergers, tends to consider a market to be "highly concentrated" when the number of competitors of the same size is roughly six or less. While data recently published by the enforcement agencies suggest the *de facto* standard may be somewhat less stringent than the one promulgated in the Guidelines, from these data it appears reasonable to conclude that antitrust enforcers are concerned with mergers that reduce the number of significant competitors below five and certainly four.

(97) Thus, in order to promote transparency in merger enforcement, the Federal Trade Commission staff recently reviewed and published data regarding its horizontal merger investigations during fiscal years 1996-2003.[96] The staff tabulated information on market structure as it relates to the Commission's decision whether or not to seek relief in the specific markets investigated. For example, the FTC compiled data on whether it sought relief or closed an investigation depending on the number of significant competitors before and after the proposed merger. Data for 573 relevant markets were used in the FTC's analysis. These data suggest that mergers that reduce the number of significant competitors from five to four, and certainly from four to three, are likely to receive an antitrust challenge. For example, of the 573 markets investigated, 52 involved mergers that would reduce the number of competitors from five to four. Of these 52 markets, there were 32 enforcement actions (62 percent of the total). Another 134 markets involved mergers that would reduce the number of competitors from four to three. Of these 134 markets, there were 102 enforcement actions (76 percent of the total). Thus, requiring the presence of only three carriers on a route would be a conservatively low threshold for indicating impairment.

[96] See Federal Trade Commission, *Horizontal Merger Investigation Data, Fiscal Years 1996-2003* (February 2, 2004).

VII.2.3. Impairment exists nationwide for DS-1 transport

(98) The Commission recognized in the TRO that CLECs are impaired without access to DS-1 capacity transport.[97] This determination was made "based on the high entry barriers associated with deploying or obtaining transport used to serve relatively few end-user customers" and record evidence that competing carriers cannot self-provide DS-1 transport.[98] However, the Commission also stated that DS-1 transport is not generally made available on a wholesale basis.[99]

(99) Based on our knowledge of the marketplace, we believe that this assessment by the Commission of the situation in wholesale markets remains valid today. Our interviews with CLECs reveal that few offer DS-1 on a wholesale basis and few CLECs purchase DS-1 capacity from other CLECs. In this section, we will discuss the reasons why the wholesale DS-1 market has not developed, and is unlikely to develop in the near term.

VII.2.4. Cost of providing DS-1 capacity between two ILEC central offices

(100) A CLEC that is currently collocated and interconnected with the ILEC at a DS-3 level has the potential of also interconnecting at a DS-1 level. As discussed above, the CLECs are impaired without access to DS-3 transport, so there is all the more reason to believe that they will also be impaired without access to DS-1. In addition, even if the CLECs are not impaired without access to DS-3 transport, there are substantial additional costs associated with effecting interconnection at the DS-1 level. These costs correspond to the two categories of cost discussed earlier in the context of the impairment standard for DS-3 transport: costs related to "first link" between the end-user's loop and the wholesaling CLEC's collocation; and costs related to the "last link" between the wholesaling CLEC and

---

97 TRO ¶244.

98 TRO ¶¶244, 245.

99 TRO ¶392.

the buying CLEC. These entry barriers are even larger in the DS-1 market compared to DS-3 market.

(101) To provide DS-1 service, the CLEC must install an M1/3 multiplexer and associated cross connection frames and power supply. The cost of an M1/3 multiplexer is approximately $2000; the cost of frames and power supplies would increase this even further. The CLEC would incur a large cost-penalty relative to the ILEC on this equipment alone, if it could only spread its cost across a small handful of DS-1 orders. The fees paid to the ILECs for cross connection are also substantial and exhibit significant scale economies.

(102) Because of the substantial recurring charges for these cross connections, it would be inefficient for the CLEC to "order in bulk" well in advance of demand, because it would have to pay the recurring rates for the circuits it did not use. The ILECs, of course, do not face these costs. The result of this process is that the cost structure of the first link of a DS-1 transport for the CLEC will demonstrate significant scale economies.

(103) The costs associated with the "final link" connecting the wholesaling CLEC to the buying CLEC was covered in Section VII.2.1. There are significant economies of scale associated with this cost element, and without question this will create a substantial cost penalty for CLEC wholesale of DS-1s relative to the ILEC. In addition, there are costs associated with developing compatible ordering and provisioning systems, which were mentioned by some CLECs as a significant cost factor.

(104) Based on discussions with CLECs, we have learned that smaller and mid-sized CLECs interconnect with few CLEC transport providers. This confirms our own analysis of the economic barriers to entry in the market for wholesaling DS-1 transport. Therefore, we would expect that with the possible exception of some extremely high capacity transport markets (e.g., Manhattan), the CLECs will not be able to obtain DS-1 transport on a competitive basis. And if the ILECs are not required to provide DS-1 UNEs, the CLECs will lose their ability to compete in the large and vital retail markets that rely on DS-1.

VII.2.5. Proposed impairment test for DS-1

(105) We propose that the Commission reconfirm its previous finding of nationwide impairment for dedicated transport at the DS-1 level. There should be a presumption of impairment for DS-1 transport on all routes, which can only be overcome if there is clear evidence that two or more carriers (unaffiliated with the ILEC) are presently providing wholesale DS-1 service on the route. This evidence should be limited to the certification by the CLECs themselves that they are currently offering DS-1 transport on a wholesale basis along the specific route. It is reasonable to rely on self certification, because the CLECs that are in the wholesale business would prefer to have the UNE delisted, which may stimulate their business prospects. This would be fully consistent with the Commission's previous ruling, and would also clarify what evidence could be relied upon to demonstrate that there was **actual** competition in the market.

(106) In contrast to the situation for DS3 or higher transport, we believe that the mere presence of CLECs with fiber-based collocations at both ends of an interoffice transport route is not probative of the availability of competing alternatives to the CLEC for DS-1 capacity transport. Even a CLEC with interoffice capacity faces significant additional costs to enter the wholesale market for DS-1 transport. These costs constitute barriers to entry that the CLEC must surmount prior to wholesaling interoffice capacity at a particular bandwidth or to an individual CLEC. It is appropriate to regard these costs as barriers to entry because they involve sunk costs, are subject to economies of scale, and to some degree are costs that the ILEC does not incur (e.g., cross-connections to the loop network). There is no threshold number of fiber-based collocating CLECs that can be used as a proxy or substitute to predict when these barriers can be overcome. Therefore, we believe that the only way for the presumption of impairment to be removed is if there is sufficient actual competition at the DS-1 level along a particular transport route.

VIII. THE IMPAIRMENT TEST AND SPECIAL ACCESS

(107) As described in Section V.3 above, the proposed refinement to the Commission's impairment standard is sufficiently robust to accommodate the "special access paradox." In this section, we describe why it is that while dependence on special access availability (as opposed to unbundled network elements) may not presently "lessen competition" and, hence under the strict terms of Section 252 (d) (2) of the Act impair wireless, the opposite is certainly true for wireline carriers. Specifically, two important market characteristics give rise to different factual conclusions. First, the market for wireless services has been incredibly dynamic. Demand growth has been staggering and novel pricing features and plans have, with the opening of PCS spectrum, added to an already frenetic level of market activity.[100] Second, within this dynamic environment, it is important to recognize that while non-ILEC wireless companies face a cost disadvantage (relative to ILEC wireless carriers) as a result of facing special access rates rather than TELRIC-based costs, wireless carriers' costs of dedicated transport is a only a small share of the typical wireless carrier's costs. Indeed, the costs of dedicated loop transport for non-ILEC wireless carriers typically constitute only a small percent of the firm's total costs. For example, as noted by Richard Gilbert, economist for the merging parties in the AT&T Wireless and Cingular Wireless transaction, special access costs were less than three percent of AT&T Wireless' total operating costs in 2003.[101] The consequence of the dynamic wireless arena and the low-cost shares of dedicated transport consequently mean that it is difficult to observe that under current market conditions the inability to secure unbundled access at TELRIC rates may have the effect of lessening competition.[102, 103]

---

[100] It is also important to note that wireless competition may not continue to be as robust as the Court cited.. The wireless companies owned by the RBOCs are currently the largest wireless companies in the United States. If they are able to raise their rival wireless companies' costs by imposing above-cost special access charges, they may be able to place their rivals in a price squeeze.

[101] Supplemental declaration of Richard Gilbert, fn. 48, http://gullfoss2.fcc.gov/prod/ecfs/retrieve.cgi?native_or_pdf=pdf&id_document=6516184423 (visited September 24, 2004).

[102] Interestingly, as wireless markets mature and price-cost margins in the wireless arena continue to fall, the present

(108) In stark contrast to the wireless carriers, however, the market for wireline local exchange services is growing at only modest levels creating more of a "zero-sum-game" environment. The consequence is that it is far more tempting for the ILEC to attempt to maintain its market position by posturing to eliminate UNE access, offering higher priced alternative services (viz., special access) and to then engage in a vertical price squeeze. The ability to do so is accentuated by the vastly different cost structure facing these carriers. The cost of loops and transport is a substantial portion of the total cost of the service bundles sold to business customers. For example, out of the typical $1000/month telecommunications service package purchased by a business and provided on a DS-1, the loop and transport portion will cost approximately $200/month, when purchased under the UNE tariffs. By comparison, the **same** loop and transport services purchased under special access will cost approximately $550/month.[104] This means that elimination of loop and transport UNEs would have a devastating effect on the CLECs, and prices would increase substantially in the markets served by the CLEC.

(109) A recent study estimated that the elimination of DS-1 loops and transport service purchased under UNE tariffs would lead to price increases in retail markets of 25 percent and a decrease in consumer welfare of approximately $4.9 billion annually.[105] The study measures only the loss from the elimination of DS-1 UNEs; there would be substantial additional losses from the elimination of DS3 UNEs. The estimate was generated by an economic model utilizing the "dominant firm—competitive fringe" pricing model. The model postulates that the dominant firm maximizes profits, subject to the constraint created by the supply decisions of the competitive fringe. When the competitive fringe is presented with a

---

inability to observe a lessening of competition associated with the failure to provide UNE-based access to dedicated transport for these carriers may change. We note that our proposed standard is robust enough to accommodate this possibility; namely, that an unimpaired market today may become impaired in the future.

[103] This does not imply that the ILECs cannot use their control over special access to harm competitors in the wireless market. By raising rates for special access, or even more importantly, by degrading the quality of access provided to their wireless competitors, the ILECs could dramatically alter the competitive situation in the wireless market. The Commission must remain diligent and attuned to the powerful incentive and ability of the ILECs to disrupt competition in the wireless market through price and non-price means of discrimination against rivals.

[104] Microeconomic Consulting and Research Associates, *The Economic Impact of the Elimination of DS-1 Loops and Transport as Unbundled Network Elements*, June 29, 2004.

[105] Id., at p. 10.

massive input price increase (not shared by the dominant firm), it will reduce supply, and the dominant firm will be able to increase its market share and its price in the retail sector The results are robust for any reasonable specification of the model, and are fully consistent with a common sense understanding of the likely outcome when all but one firm in a market are faced with a massive input price increase. It is difficult to conceive of any definition or interpretation of the impairment standard that would treat this competitive distortion as conforming with the requirements of the Act.

(110) The ILECs are likely to argue that the comparison between UNEs and month-to-month special access rates ignores the availability of special access term and volume discounts. We believe that the only valid comparison is for special access and UNEs purchased under similar terms and conditions. UNE prices apply to month-to-month purchases. No volume or term discounts are available, so the only apples-to-apples comparison must be to special access month-to-month rates. Term and volume commitments come at a cost to the purchasers, which cannot be ignored in comparing the two ways of buying loops and transport. Customer churn for a competitive industry can be substantial and make term plans risky. Volume commitments are also risky and costly to CLECs because they restrict their ability to shift traffic onto newly built facilities. Furthermore, there is absolutely no guarantee that the ILECs will maintain discounts at current levels, because under the Commission's pricing flexibility rules, the ILECs have the ability to change rates at will.

(111) One of the greatest dangers associated with eliminating UNEs is that it opens the door to the ILECs to engage in strategic behavior that would stymie new facilities builds by the CLECs. Therefore, it would be contrary to a fundamental goal of the unbundling regime, which is to enable CLECs to reduce the risk associated with building out more facilities, by building up a customer base using network elements leased from the ILECs. The ILECs have already demonstrated their willingness and ability to engage in anticompetitive pricing practices in the special access market, and harm competition. In particular, the ILECs have instituted exclusionary pricing schemes for special access that restrict the ability of customers to obtain services from the ILECs' competitors.

(112) Some examples of the ILECs' exclusionary pricing are discount plans that require customers to commit for the entire term of the contract to continue purchasing services worth 90 percent or more of current spending levels from the incumbent. Although described as

discounts by the ILECs, these pricing practices are more accurately described as penalties that punish customers that attempt to "defect" and shift demand to competitors. Another example is a condition in tariffs that require a certain percentage of purchases under the plan to be previously provided by a CLEC. Some of the plans actually "pay" the customer to use more of the ILEC's special access service.[106]

(113) Exclusionary pricing schemes are recognized by the economics literature and the Courts as potentially dangerous to competitive markets. In a seminal article published in 1991, "Naked Exclusion," Rasmusen, Ramseyer, and Wiley present a model where a monopolist induces enough buyers to sign exclusive contracts, such that there is insufficient demand available to other firms to enable them to enter the market and operate profitably.[107] The exclusion is "naked," meaning that it is "unabashedly" meant to exclude rivals and for which there is no efficiency justification.

(114) A recent federal appellate court decision concluded that exclusionary pricing practices in markets dominated by a single firm may violate the antitrust laws. In *LePage Inc. v. 3M*, 324 F.3d 141 (3rd Cir. 2003), the Court of Appeals affirmed the judgment of the district court that 3M's exclusionary conduct could sustain a verdict that 3M violated U.S. antitrust law. In *LePage*, 3M used its dominant market power in the transparent tape market to meet the competition that LePage threatened by "exclusionary conduct that consisted of rebate programs and exclusive dealing arrangements designed to drive LePage's and any other viable competitor from the transparent tape market."[108]

(115) It is clear from the ILECs' past behavior in special access markets, that the prices of this so-called alternative to UNEs are being manipulated to thwart competition, whether the competition is in the local transport market or in the retail markets that depend on dedicated

---

[106] Declaration of Michael D. Pelcovits on Behalf of WorldCom, Inc. Docket RM No. 10593.

[107] Eric B. Rasmusen, J. Mark Ramseyer, and John S. Wiley, Jr., "Naked Exclusion," *American Economic Review*, December 1991, pp. 1137-45. Subsequent articles on the same topic include: Ilya R. Segal and Michael D. Whinston, "Naked Exclusion: Comment," *American Economic Review*, March 200, pp. 296–309; Robert Innes and Richard J. Sexton, "Strategic Buyers and Exclusionary Contracts," *American Economic Review*, June 1994, pp. 566-84.

[108] *LePage*, 324 F.3d at p. 154.

loops and transport. Until the interLATA restrictions were lifted from the RBOCs, their strategy was to deter competition for their intraLATA toll services by creating these exclusionary pricing schemes. Now that the RBOCs are free to compete in all retail interLATA markets, they will have the incentive and ability to abuse their control over dedicated loops and transport to harm competitors. Pricing of special access will be a powerful, and under the current Commission rules, largely unregulated, weapon that will be used by the ILECs to gain an unfair and artificial advantage over their rivals.

(116) The ILECs would be able to put competitors into an immediate price squeeze, if competitors could no longer use cost-based UNEs. There is abundant proof that special access is priced significantly above cost, and that neither competition nor regulation constrains prices effectively. The first piece of evidence is the comparison between UNE prices and special access prices for DS-1 loop and transport discussed above. Special access prices are uniformly higher than UNE prices across all states, which have set the cost-based UNE rates independently. The second piece of evidence is the staggering rates of return the ILECs are now earning on special access. In 2003, the earnings averaged 43.7 percent for all of the RBOCs.[109] These earnings have been increasing since pricing flexibility was first allowed in 1999.[110] The third piece of evidence is that the RBOCs have taken advantage of pricing flexibility to raise special access rates **in the geographic areas no longer subject to price caps.**[111] This fact, by itself, proves that the supposed alternatives to ILEC loop and transport are not exerting much of a constraint on prices for these services. Given this experience over the last several years, it is inconceivable that the ILECs would not take the opportunity created by the elimination of UNEs to put the CLECs into a price squeeze by maintaining lower prices on retail services, as their competitors face a large input cost increase.

---

109 FCC ARMIS Reports 43-01, pp. 43-04.

110 Economics and Technology Inc., Competition in Access Markets: Reality or Illusion, August 2004.

111 George S. Ford and Lawrence J. Spiwak, "Set It and Forget It? Market Power and the Consequences of Premature Deregulation in Telecommunications Markets," Phoenix Center Policy Paper No. 18, at p. 13 (July 2003).

(117) The possibility of imposing the regulatory "band-aide" of imputation (i.e., requiring that the price of special access be imputed into the retail-stage prices of the ILEC) is demonstrably an inadequate solution.[112] Moreover, not only would such a "solution" be ineffective, it is also totally contrary to the paradigm of the Telecommunications Act of 1996. The Act approaches the problem of ILEC market power over the upstream products by requiring the Commission to establish controls over the pricing and availability of these products. This is the most direct way to prevent the ILECs from leveraging their market power into downstream markets and also to encourage the ILECs' rivals to enter into the upstream market, as conditions allow it. A major benefit of this policy is to obviate the need to regulate the multitude of downstream services that depend on the monopolized inputs.

(118) If, contrary to this logical approach, the Commission were to eliminate the UNE requirements while the ILECs still had the ability and incentive to leverage their upstream market power, this would be inviting the ILECs to "take their best shot" at harming their rivals. The temptation would be irresistible, and the Commission would be forced to inspect the retail pricing of the ILECs across an ever-widening array of retail products. This would create an entirely new layer of regulation requiring assignment of substantial resources by the Commission. A new "Imputation Division" of the Commission would have to look at the detailed price structure of all such retail products, and also analyze the downstream activities of the ILECs to test whether the tariffed special access rates were actually being imputed into the final goods prices. This is a nightmare scenario, predestined to failure.

(119) Nor is it correct to presume that the success of certain CLECs that presently use special access is proof that CLECs are not impaired without UNEs. The CLECs that "voluntarily" choose to use a higher-priced alternative have a number of reasons for relying on special access. These include situations where: 1) CLECs have committed to long-term contracts for special access and would face large termination penalties to switch to UNEs; 2) CLECs have well established, and generally effective, ordering and provisioning systems established for

---

[112] See T. Randolph Beard, David L. Kaserman and John w. Mayo "On the Impotence of Imputation," *Telecommunications Policy*, Volume 27, Issues 8-9, September-October 2003, pp. 585-595.

special access; 3) a complex and confusing array of use restrictions and commingling bans make it costly for certain CLECs to use UNEs; 4) special access is used in cases where the price differences are small (e.g., short mileage transport); and 5) ILECs claim to have no facilities available.

(120) It is our understanding that CLECs that continue to use special access will elaborate on these reasons and explain why they use special access in their own filings to the Commission. What is important to understand from an economic perspective is that conduct and performance in the many retail markets where the CLECs depend on ILEC-provided inputs is fragile and vulnerable to anticompetitive behavior by the ILECs. The fact that some CLECs buy special access instead of UNEs is only a single snapshot of a small part of the competitive landscape. All it proves is that some CLECs have either been enticed away from UNEs with customized pricing plans or have been compelled to use a high-priced service because the ILECs have raised their cost of using UNEs.113 This does not mean that competition in the retail markets has not already been lessened by the ILECs' behavior, or that the ILECs could not create even greater competitive distortions if they were freed from the obligation to provide UNEs.

(121) The consequence of these considerations, then clearly support a Commission finding that, despite the possibility that wireless carriers may be unimpaired without UNE access to dedicated transport, the wireline CLECs are, and for the foreseeable future will remain, impaired without UNE access to dedicated transport at the DS-1, DS3, and dark fiber levels. More generally, while the availability of special access is not "irrelevant" to the impairment standard, it does not alter the conclusion that wireline carriers remain impaired without access to DS-1, DS3, and dark fiber loops and transport as we have described.

[113] The costs include not only the "official" TELRIC price, but also any costs associated with ordering provision and quality maintenance.

IX. THE IMPAIRMENT TEST AND INTERMODAL ALTERNATIVES

(122) Another factor to consider in determining whether or not there is impairment is the extent to which intermodal alternatives, such as wireless (fixed or mobile) and cable, provide meaningful substitutes. There are two levels at which such alternatives could be considered when evaluating impairment. The first is whether CLECs themselves could use such alternatives to provide services to their customers that otherwise rely on DS-1, DS-3, and dark fiber loops and/or transport.

(123) Secondly, even if CLECs are not able to use these alternatives, under our proposed standard, there could be non-impairment if customers themselves are able to procure such services directly from providers of wireless or cable services. Recall that our proposed impairment standard indicates that requesting carriers are impaired only if the failure to provide the requested network element creates a barrier whose effect may be to *substantially lessen competition.* Thus, even if requesting CLEC carriers cannot utilize such alternatives, under our proposed standard there would not be impairment if customers themselves could turn to such alternatives and the existence of such alternatives provided a "sufficient" check on the ILECs.

(124) The vast majority of the CLECs with whom we spoke indicated that wireless (either fixed or mobile) does not provide a viable alternative for them to provide the services they normally provide via DS-1, DS-3, and dark fiber loops and/or transport.[114] A number of CLECs noted that in their marketing areas, wireless providers were simply not available.[115,116] Others noted that the current technology of wireless provision limits the services that can be

[114] Discussions with **BEGIN PROPRIETARY END PROPRIETARY**

[115] Discussions with **BEGIN PROPRIETARY END PROPRIETARY**

[116] Data from the FCC indicates that there is little deployment of wireless services for advanced services. Thus, based on Table 2.1 through 2.4 of *Trends in Telephone Service*, May 2004, satellite and fixed wireless comprised one percent of all high-speed lines with 200 kbps in at least one direction, and 0.4 percent of all high-speed lines with at least 200 kbps in both directions. Eliminating residential and small business lines from these totals results in satellite and fixed wireless penetration of .7 percent in one direction .8 percent in both directions.

provided.[117] While there may be potential for wireless in the future, the CLECs indicated this technology is neither sufficiently developed nor widely enough available to provide a meaningful alternative in the near term.

(125) Others noted a number of other practical problems with wireless as an alternative. For example, one CLEC indicated that it had a small wireless trial.[118] This carrier indicated it was evaluating wireless as a means of augmenting, but not replacing, its DSL services. However, given the immaturity of the marketplace for this technology, and its limited penetration, it could not make a substantial commitment to this technology for the foreseeable future. That is, a substantial commitment to wireless involves sunk costs requiring network redesign, new equipment, and training. It would not be willing to take these risks given the uncertainty that there will be significant providers of such services.

(126) There also appear to be a number of practical problems involved in wireless deployment.[119] For example, gaining rooftop rights in commercial office buildings to place antenna equipment has proven extremely difficult. Also difficult is negotiating rooftop access to ILEC Central Offices. Additionally, the technology of fixed wireless communications is limited to short haul applications and requires a direct line of sight between the customer location and the provider's network. This can limit applicability or reduce quality. Finally, wireless communications can be affected by precipitation which also has the potential to reduce quality.

(127) In addition to a general lack of wireless providers, a number of the CLECs with whom we spoke expressed skepticism that such an alternative would be viable in the foreseeable future. The provision of wireless services requires spectrum, which is a scarce resource. Many CLECs questioned whether wireless providers of access services could obtain such

---

[117] Discussions with **BEGIN PROPRIETARY END PROPRIETARY**

[118] Discussions with **BEGIN PROPRIETARY END PROPRIETARY**

[119] Discussions with **BEGIN PROPRIETARY END PROPRIETARY**

spectrum. Other felt the bankruptcy of the two leading providers of such services, Teligent and Winstar, indicated wireless provision is not yet a viable alternative.[120]

(128) With respect to cable, most of the CLECs noted there simply was not a cable alternative available to them to serve their enterprise customers that use products that rely on DS-1, DS-3, and dark fiber loops and/or transport.[121] Most cable providers are focused on providing residential service. With respect to the enterprise customers on which CLECs use DS-1, DS-3, and dark fiber loops and transport to provide service, there is rarely, if ever, an alternative cable provider.[122] Further, many CLECs noted that cable does not generally provide the level of bandwidth that services which utilize DS-1, DS-3, and dark fiber loops and or transport require, which also limits their value as substitutes.

(129) In terms of whether customers themselves could turn to cable, similar considerations apply. The absence of cable providers in business districts prevents the CLECs from using them as an alternative wholesaler, and prevents final customers from using them as well. Further, the bandwidth limitations of cable alternatives also limit the appeal and impact of this mode of delivery. It is also noteworthy that a number of the CLECs with whom we spoke indicated that to their knowledge, they had never lost a customer to cable.[123]

(130) It is also important to note that in our proposed impairment tests, the goal is to ensure that there be at least three competitors actually providing the service. If only the ILECs and the cable companies are able to service customers, this would not be enough providers to meet our (arguably lenient) standard for "sufficient" actual competition to demonstrate that economic and operational barriers have been overcome.

---

120 Discussions with **BEGIN PROPRIETARY END PROPRIETARY**

121 Discussions with **BEGIN PROPRIETARY END PROPRIETARY**

122 Data from the FCC also suggests that there is little deployment of cable for advanced services for business. Thus, again using Tables 2.1 through 2.4 of *Trends in Telephone Service*, May 2004, and eliminating residential and small business lines from these totals results in cable penetration of 0.8 percent of all high-speed lines with 200 kbps in at least one direction, and in both directions.

123 Discussions with **BEGIN PROPRIETARY END PROPRIETARY**

X. CONCLUSION

(131) The USTA II court's opinion has given the Commission the opportunity to refine and improve its impairment standard. It also returns to the Commission the principal responsibility of administering the impairment standard. In this report, we have provided, what we hope will be both a fresh and useful perspective on how the Commission can refine its impairment standard, and how the Commission may begin to implement an impairment test for DS-1, DS-3 and dark fiber loops and transport.

(132) The standard we propose retains the laudable traits of the TRO's standard, and is squarely consistent with both sound economic principles and the Telecommunications Act. Moreover, it directly resolves the issues raised by the USTA II court regarding the impairment standard. This report also describes and discusses an application of that standard that is designed to be both administratively feasible and squarely consistent with the standard.