Before the
Federal Communications Commission
Washington, D.C. 20554

In the Matter of	)	
	)	
Unlicensed Operation in the TV Broadcast Bands	)	ET Docket No. 04-186
	)	
	)	ET Docket No. 02-380
Additional Spectrum for Unlicensed Devices Below 900 MHz and in the 3 GHz Band	)	

Appendix C to Comments of Shared Spectrum Company

MEASUREMENT EQUIPMENT

Equipment Configuration

The antennas, cables, filters, fixed attenuators, and pre-amplifiers were varied in each measurement location to optimize the dynamic range of the measurements. Below is a list of the equipment parameters and the configuration used for each measurement.

Equipment Configuration Parameters

Parameter	Value
Antenna Type	=0 for no antenna (system noise), =1 for discone, =2 for large LPA, =3 for small LPA
Cable Type	=1 for (1) RG-8 cables, =2 for (2) RG-8 cables, =3 for short orange cable
Attenuation (Att)	=value of fixed attenuator in dB =0 for none, XX dB otherwise, XX > 0

Separate files were collected for each collection of a frequency list. The file size is 9k and 110k, depending on the number of frequency bands.

Before each measurement at an official measurement site, data using a variety of frequency lists were collected to look for strong signals that might overload the pre-amplifier and/or the spectrum analyzer. Also, the data was examined to insure the equipment was

operating properly. After the equipment configuration was finalized, long duration collections were made using the specified List A and List B frequency lists.

Pre-selector Logic

There are four ports of logic lines that control the pre-selector. Port A (bits 0 and 1) controls the amplifier regulators and the band select filter that switches between the <1GHz and >1GHz antennas. The bit settings are shown below:

Port A

Band	A0	A1	Value
< 1GHz	1	0	1
> 1GHz	0	2	2

Port B (bits 0, 1, 2, and 3) control the digital attenuators for both band. The bit settings are as follows:

Port B

Attenuation (dB)	B0	B1	B2	B3	Value
0	0	0	0	0	**0**
2	1	0	0	0	**1**
4	0	1	0	0	**2**
6	1	1	0	0	**3**
8	0	0	1	0	**4**
10	1	0	1	0	**5**
12	0	1	1	0	**6**
14	1	1	1	0	**7**
16	0	0	0	1	**8**
18	1	0	0	1	**9**
20	0	1	0	1	**10**
22	1	1	0	1	**11**
24	0	0	1	1	**12**
26	1	0	1	1	**13**
28	0	1	1	1	**14**
30	1	1	1	1	**15**

Port C LO (bits 0, 1, and 2) control the 6-way switch for the <1GHz section of the pre-selector. The bit settings for each band are shown as follows:

Port C LO

Band	Filter	CL0	CL1	CL2	Value
30 - 54	66MHz LPF	0	0	0	**0**
54 - 88	FM BSF	0	0	1	**4**
88 - 108	Thru	1	0	0	**1**
108 - 138	108-174MHz BPF	0	1	0	**2**
138 - 174	108-174MHz BPF	0	1	0	**2**
174 - 216	FM BSF	0	0	1	**4**
216 - 225	216-470MHz BPF	1	1	0	**3**
225 - 406	216-470MHz BPF	1	1	0	**3**
406 - 470	216-470MHz BPF	1	1	0	**3**
470 - 512	FM BSF	0	0	1	**4**
512 - 608	FM BSF	0	0	1	**4**
608 - 698	FM BSF	0	0	1	**4**
698 - 806	692MHz HPF	1	0	1	**5**
806 - 902	692MHz HPF	1	0	1	**5**
902 - 928	692MHz HPF	1	0	1	**5**
928 - 960	692MHz HPF	1	0	1	**5**

Finally, Port C HI (bits 0 and 1) control the 4-way switch for the >1GHz section of the pre-selector. The bit settings for each band are shown as follows:

Port C HI

Band	Filter	CH0	CH1	Value
1240 - 1300	1930MHz LPF	0	0	**0**
1300 - 1400	1930MHz LPF	0	0	**0**
1400 - 1525	1930MHz LPF	0	0	**0**
1525 - 1710	1930MHz LPF	0	0	**0**
1710 - 1850	1930MHz LPF	0	0	**0**
1850 - 1990	Thru	0	1	**2**
1990 - 2110	1970MHz HPF	1	0	**1**
2110 - 2200	1970MHz HPF	1	0	**1**
2200 - 2300	1970MHz HPF	1	0	**1**
2300 - 2360	1970MHz HPF	1	0	**1**
2360 - 2390	1970MHz HPF	1	0	**1**
2390 - 2500	1970MHz HPF	1	0	**1**
2500 - 2686	1970MHz HPF	1	0	**1**
2686 - 2900	1970MHz HPF	1	0	**1**

Below is a summary of all files showing the frequency list, the antenna type, the cable type, the attenuation value, the filter type, and the pre-amplifier type used.

Equipment Type

Start Time	Location	Comment	Freq List	Start File	End File	Num Files	Duration (sec)	Antenna Type
8/31/04 4:00 pm	SE corner		List A	7617	16605	8989	79200	1
8/31/04 4:00 pm	SE corner		List B	228	441	214	79200	3
9/1/04 8:35 pm	SE corner		List A	16608	27527	10919	107280	1
9/1//04	SE Corner		List B	452	724	273	107290	3

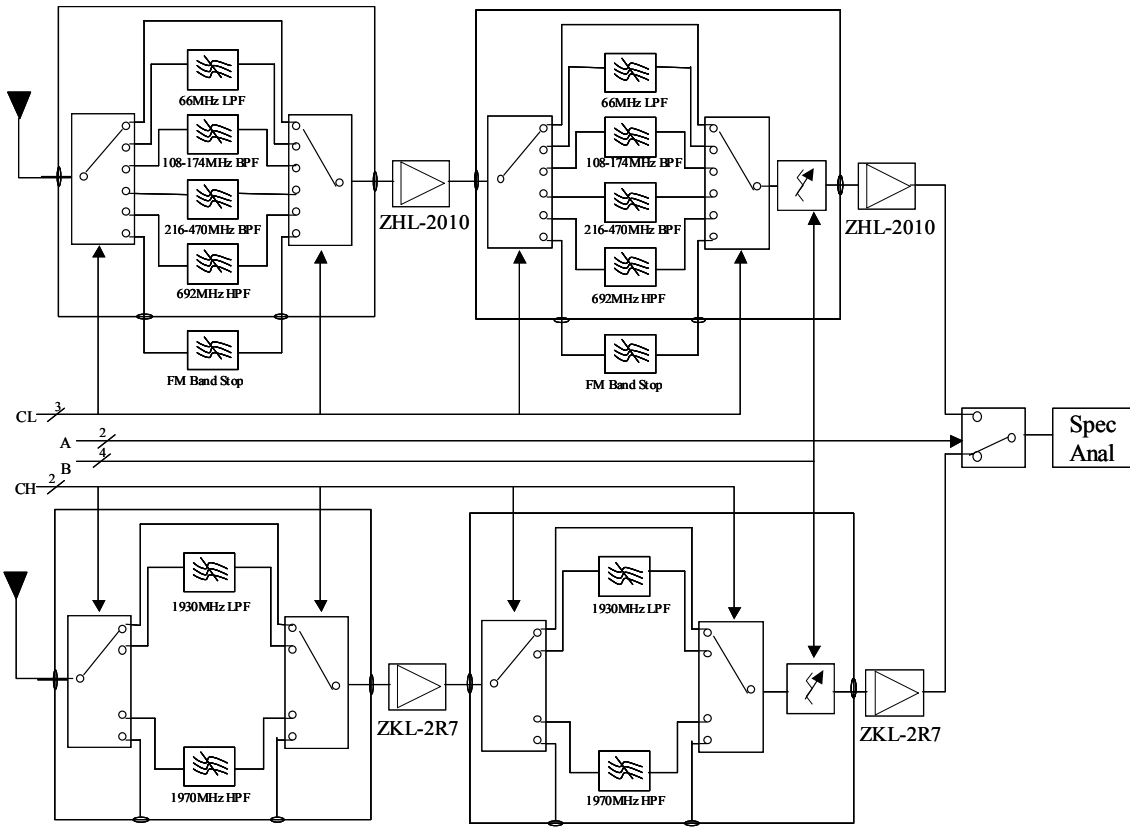

Block diagram of the pre-selector

Frequency Collection Lists

Three frequency lists were used:

- List A – Public Safety band usage,
- List B – Other band usage, and
- List C – High resolution frequency sweep.

List A – Public Safety bands

Start Freq (MHz)	Stop Freq (MHz)	Ref Level (dBm)	Band Width (MHz)	Frequency Bin Size (kHz)	dB/div	Res_BW (Hz)	Vid_BW (Hz)	Attenuation (dB)		Sweep Time (sec)
								SA	Pre-selector	
138	174	-20	36	72	10	1.00E+04	1.00E+04	20	20	0.24
406	470	-20	64	128	10	1.00E+04	1.00E+04	20	10	0.64

List B – Other bands from 30 MHz – 3GHz

Start Freq (MHz)	Stop Freq (MHz)	Ref Level (dBm)	Band Width (MHz)	Frequency Bin Size (kHz)	dB/div	Res_BW (Hz)	Vid_BW (Hz)	Attenuation (dB)		Sweep Time (sec)
								SA	Pre-Selector	
30	54	-10	24	48	10	1.00E+04	1.00E+04	10	10	0.3
54	88	-10	34	68	10	1.00E+04	1.00E+04	20	20	0.4
108	138	-10	30	60	10	1.00E+04	1.00E+04	10	10	0.4
174	216	-10	42	84	10	1.00E+04	1.00E+04	20	20	0.5
216	225	-10	9	18	10	1.00E+04	1.00E+04	10	10	0.1
225	406	-10	181	361	10	1.00E+04	1.00E+04	10	10	2.3
470	512	-10	42	84	10	1.00E+04	1.00E+04	20	20	0.5
512	608	-10	96	192	10	1.00E+04	1.00E+04	10	10	1.2
608	698	-10	90	180	10	1.00E+04	1.00E+04	10	10	1.1
698	806	-10	108	216	10	1.00E+04	1.0004	10	10	1.2
806	902	-10	96	192	10	1.00E+04	1.00E+04	10	10	1.2
902	928	-10	26	52	10	1.00E+04	1.00E+04	10	10	0.3
928	960	-10	32	64	10	1.00E+04	1.00E+04	10	10	0.4
960	1240	-10	280	559	10	1.00E+04	1.00E+04	10	20	4.0
1240	1300	-20	60	120	10	1.00E+04	1.00E+04	10	10	0.6
1300	1400	-20	100	200	10	1.00E+04	1.00E+04	10	10	1.0
1400	1525	-20	125	250	10	1.00E+04	1.00E+04	10	10	1.6
1525	1710	-20	185	369	10	1.00E+04	1.00E+04	10	10	2.3
1710	1850	-20	140	279	10	1.00E+04	1.00E+04	10	20	1.8
1850	1990	-20	140	279	10	1.00E+04	1.00E+04	10	20	1.8
1990	2110	-20	120	240	10	1.00E+04	1.00E+04	10	0	1.5
2110	2200	-20	90	180	10	1.00E+04	1.00E+04	10	0	1.1
2200	2300	-20	100	200	10	1.00E+04	1.00E+04	10	0	1.3
2300	2360	-20	60	120	10	1.00E+04	1.00E+04	10	0	0.8
2360	2390	-20	30	60	10	1.00E+04	1.00E+04	10	0	0.4
2390	2500	-20	110	220	10	1.00E+04	1.00E+04	10	0	1.4
2500	2686	-20	186	371	10	1.00E+04	1.00E+04	10	0	2.3
2686	2900	-20	214	427	10	1.00E+04	1.00E+04	10	0	2.7

List C – High Resolution Frequency Sweep

Band	Start Freq (MHz)	Stop Freq (MHz)	Band Width (MHz)	Frequency Bin Size (kHz)	Res_BW (Hz)	Vid_BW (Hz)
	30	35	5	10	3000	3000
	35	40	5	10	3000	3000
	40	45	5	10	3000	3000
	45	50	5	10	3000	3000
	50	55	5	10	3000	3000
	55	60	5	10	3000	3000
Between TV Ch 4 and 5	70	75	5	10	3000	3000
Aviation	110	115	5	10	3000	3000
Aviation	115	120	5	10	3000	3000
Aviation	120	125	5	10	3000	3000
Aviation	125	130	5	10	3000	3000
Aviation	130	135	5	10	3000	3000
Public Safety	135	140	5	10	3000	3000
Public Safety	140	145	5	10	3000	3000
Public Safety	145	150	5	10	3000	3000
Public Safety	150	155	5	10	3000	3000
Public Safety	155	160	5	10	3000	3000
Public Safety	160	165	5	10	3000	3000
Public Safety	165	170	5	10	3000	3000
Public Safety	170	175	5	10	3000	3000
TV Ch 10	190	195	5	10	3000	3000
TV Ch 10	195	200	5	10	3000	3000
	215	220	5	10	3000	3000
	220	225	5	10	3000	3000
	225	230	5	10	3000	3000
	230	235	5	10	3000	3000
	235	240	5	10	3000	3000
	240	245	5	10	3000	3000
	245	250	5	10	3000	3000
	250	255	5	10	3000	3000
	255	260	5	10	3000	3000
	260	265	5	10	3000	3000
	265	270	5	10	3000	3000
	270	275	5	10	3000	3000
	275	280	5	10	3000	3000
	280	285	5	10	3000	3000
	285	290	5	10	3000	3000
	290	295	5	10	3000	3000
	295	300	5	10	3000	3000
	300	305	5	10	3000	3000
	305	310	5	10	3000	3000
	310	315	5	10	3000	3000
	315	320	5	10	3000	3000
	320	325	5	10	3000	3000

Band	Start Freq (MHz)	Stop Freq (MHz)	Band Width (MHz)	Frequency Bin Size (kHz)	Res_BW (Hz)	Vid_BW (Hz)
	325	330	5	10	3000	3000
	330	335	5	10	3000	3000
	335	340	5	10	3000	3000
	340	345	5	10	3000	3000
	345	350	5	10	3000	3000
	350	355	5	10	3000	3000
	355	360	5	10	3000	3000
	360	365	5	10	3000	3000
	365	370	5	10	3000	3000
	370	375	5	10	3000	3000
	375	380	5	10	3000	3000
	380	385	5	10	3000	3000
	385	390	5	10	3000	3000
	390	395	5	10	3000	3000
	395	400	5	10	3000	3000
	400	405	5	10	3000	3000
Public Safety	405	410	5	10	3000	3000
Public Safety	410	415	5	10	3000	3000
Public Safety	415	420	5	10	3000	3000
Public Safety	420	425	5	10	3000	3000
Public Safety	425	430	5	10	3000	3000
Public Safety	430	435	5	10	3000	3000
Public Safety	435	440	5	10	3000	3000
Public Safety	440	445	5	10	3000	3000
Public Safety	445	450	5	10	3000	3000
Public Safety	450	455	5	10	3000	3000
Public Safety	455	460	5	10	3000	3000
Public Safety	460	465	5	10	3000	3000
Public Safety	465	470	5	10	3000	3000
Public Safety	470	475	5	10	3000	3000
TV Ch 19 and Ch 20	500	505	5	10	3000	3000
TV Ch 19 and Ch 20	505	510	5	10	3000	3000
TV Ch 19 and Ch 20	510	515	5	10	3000	3000
TV Ch 19 and Ch 20	515	520	5	10	3000	3000
	925	930	5	10	3000	3000
	930	935	5	10	3000	3000
	935	940	5	10	3000	3000
	940	945	5	10	3000	3000
	945	950	5	10	3000	3000
	950	955	5	10	3000	3000
	955	960	5	10	3000	3000
	960	965	5	10	3000	3000

List A – Public Safety and List B –Other Bands were operated in a "ping-pong mode" over a 48 hours period. This operation mode provided improved resolution for the Public Safety frequency bands as compared to the other frequency bands. Day 1 started on August 31, 2004. Day 2 started on September 1, 2004. Results were:

"Ping Pong" Mode Used with Lists A and B

Frequency List	List Measurement Time (sec)	Repetitions	Cycle Duration (sec)	Experiment Duration (hours)	Experiment Duration (sec)	Number of Measurements
A	5	40	200			5760
B	100	1	100			144
Total			300	12	43200	144

A second experiment was performed to improve the frequency resolution of select bands using List C. This experiment is summarized here.

Experiment Performed with Frequency List C

Frequency List	List Measurement Time (sec)	Repetitions	Cycle Duration (sec)	Experiment Duration (hours)	Experiment Duration (sec)	Number of Measurements
C	300	1	300			48
Total			300	4	14400	48

Equipment Setup

The equipment consisted of the Spectrum Analyzer, pre-selector, omni-directional antenna (discone), small LPA (for frequencies > 1000 MHz) and a laptop computer. A 20-foot long RG8 cable was used to connect the pre-selector box, which in turn is connected to the both the antennas. An extension cord plugged into the building powered the equipment.

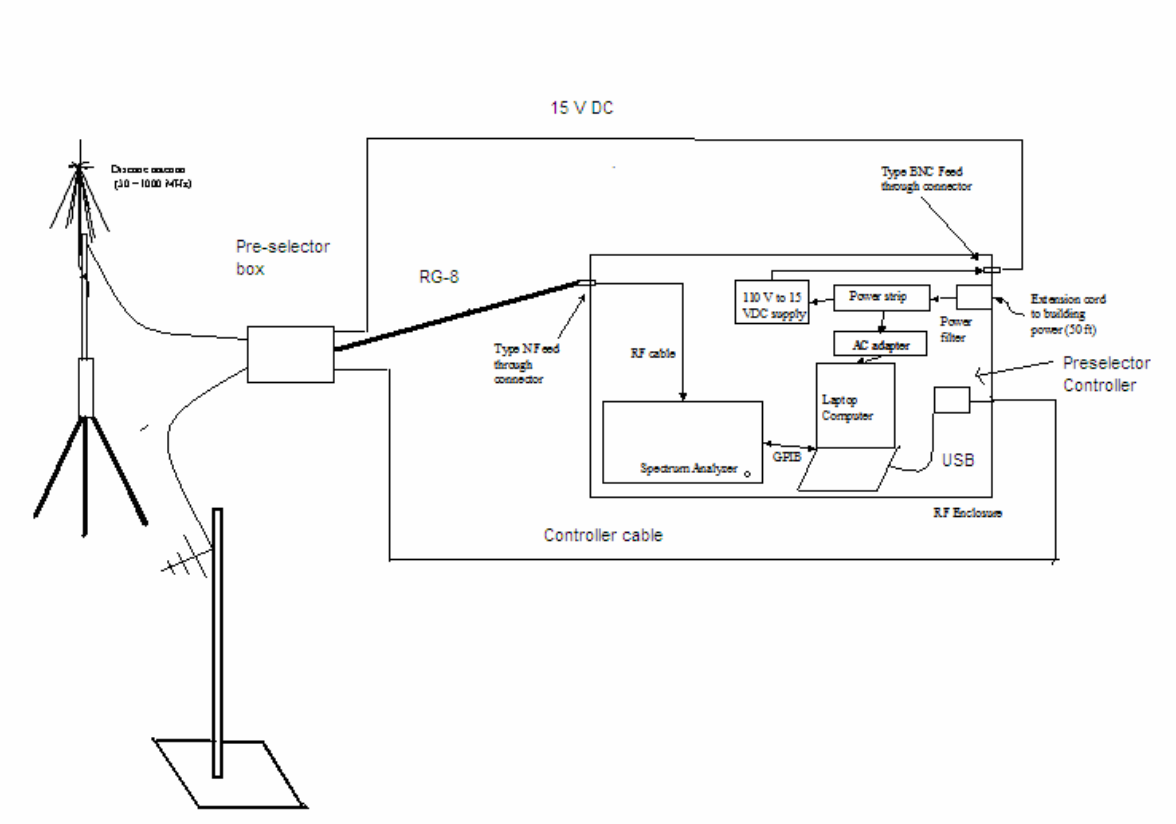

Spectrum Measurement Equipment Configuration

The discone was used for measuring signals below 1 GHz and LPA for measuring signals above 1GHz. The LPA antenna was tilted at 45 degree to the horizontal to allow reception of both horizontal and vertically polarized signals.

Antennas, pre-selector box and the connections

The RF Shield box in which all the data collection equipment is placed