Before the
FEDERAL COMMUNICATIONS COMMISSION
Washington, D.C. 20554

In the Matter of	)	
	)	
Mobile Satellite Ventures Subsidiary LLC	)	
	)	
Application for Minor Modification of Space Station License (AMSC-1)	)	File No. SAT-MOD-20031118-00333
	)	
Minor Amendment to Pending Application to Launch and Operate a Next-Generation Replacement MSS Satellite System	)	File No. SAT-AMD-20031118-00332
	)	
Application for a Minor Modification of Blanket License to Operate Mobile Earth Terminals with MSAT-1	)	File No. SES-MOD-20031118-01879

OPPOSITION OF MOBILE SATELLITE VENTURES SUBSIDIARY LLC TO APPLICATION FOR REVIEW OF INMARSAT VENTURES LTD.

Bruce D. Jacobs
David S. Konczal
SHAW PITTMAN LLP
2300 N Street, N.W.
Washington, D.C. 20037
(202) 663-8000

Randy Segal
Senior Vice President
Lon C. Levin
Vice President
MOBILE SATELLITE VENTURES SUBSIDIARY LLC
10802 Park Ridge Boulevard
Reston, Virginia 20191
(703) 390-2700

Dated: December 23, 2004

Summary

The Bureau is to be applauded for granting the first-ever ATC license. The Bureau's action is an important preliminary step in the implementation of the FCC's vision of next-generation MSS. MSV shares that vision, and is committed to building on its existing satellite system by launching new high-capacity satellites for nationwide coverage and an ancillary terrestrial network. MSV's advanced MSS system will provide more efficient, high quality, and affordable voice and data communications, with the improved coverage, capacity, and economies of scale needed for a consumer service. MSV's advanced system, with its ubiquity and affordability, will be the first MSS system that can have a meaningful impact on the full range of communications needs of first responders everywhere in the United States.

The Bureau's action, which Inmarsat now attacks vigorously, was highly conservative and fully supported by the technical record before it. True, the Bureau granted MSV a small number of limited conditional waivers. But the Bureau determined that those conditional waivers would "afford MSV flexibility to operate more efficiently *without causing additional interference*." MSV very much appreciates the Bureau's decision, but also looks forward to timely action on its pending petition for reconsideration of the *ATC Order*. MSV has made a strong showing in support of specific revisions to the ATC rules that can materially increase the use of L-band spectrum without impairing other systems. MSV understands that the Bureau was not prepared to grant additional waivers while the Commission reconsiders the ATC rules. Nevertheless, MSV hopes that reconsideration will be completed in the near future so that the results can be incorporated in the forthcoming deployment of ATC technology, both in the base stations and the handsets. As MSV has demonstrated elsewhere, L-band ATC rules can be modified to be more consistent with ATC in the Big LEO and S-bands without any material impact on other systems.

Inmarsat's Application for Review is both predictable and consistent with its long-standing attempts to block ATC and MSV's development. Inmarsat's filing is not so much an attack on MSV as it is an attack on both the ATC rules themselves and the Commission's strongly-stated recognition that MSS-ATC operations are in the public interest. Inmarsat's motivation is obvious: because both Inmarsat and MSV operate in the same band, Inmarsat stands to benefit greatly from creating obstacles for MSV in the development of its business. However, in promulgating the ATC rules, the Commission has recognized the opportunity ATC provides MSS to break the vicious cycle of low capacity, high prices, and few customers. Only with ATC can MSS operators achieve the coverage, capacity, and economies of scale needed to overcome this vicious cycle with a virtuous one of affordable equipment and service. The Bureau has now taken the first step in the march toward next-generation MSS. Every delay Inmarsat is able to generate buys it more time to get a return on its existing investment and to develop the intellectual capacity to operate in the ATC area itself.

In its filing, Inmarsat refuses to recognize the limited nature of the Bureau's action here. Inmarsat unfairly denigrates the Bureau's careful and conservative technical analysis. It disregards the Bureau's cautious decision to defer action on many of MSV's waiver requests. Indeed, Inmarsat even fails to acknowledge that although the Bureau concluded that Inmarsat's interference arguments were grossly overstated, the Bureau nevertheless went out of its way to protect Inmarsat. For example, although the Bureau found that ATC base station operations at an 8 dB greater power would not impact Inmarsat even under the "very conservative studies" performed in *ATC Order* -- a finding that was both correct and sufficient to support a waiver of the rules -- the Bureau also decided "in an abundance of caution" to require MSV to give Inmarsat advance notice before operating under the waiver. This requirement provides Inmarsat

with yet another opportunity to complain of interference if Inmarsat is able to prove its allegations of harm. But in its zeal to attack what the Bureau has done, Inmarsat does not recognize the benefit the Bureau has bestowed upon it. Instead, Inmarsat asserts that by creating the advance notice requirement, the Bureau is undercutting its own fundamental finding that actual interference is very unlikely to occur. This misstates what the Bureau has done, and if Inmarsat does not consider the Bureau's notice requirement helpful, perhaps the Commission should simply delete it.

In addition to mischaracterizing the Bureau's action with regard to notice, Inmarsat also distorts the record regarding other technical findings of the Bureau. Inmarsat even goes so far as to make the absurd allegation that "[t]he Bureau has effectively elevated MSV's ATC service to co-primary status with MSS." Of course, the Bureau has done nothing of the kind. The Bureau has conservatively afforded MSV a modest degree of additional flexibility, less than that afforded to Big LEO and S-band operators. As discussed below, Inmarsat's specific challenges to the Bureau's technical findings are similarly over-reaching and inconsistent with the record.

Predictably, Inmarsat attempts to turn up the rhetorical volume with dire forecasts of the impact of ATC on its operations, including potential deployment of its new BGAN service in the United States. The simple fact is that MSV's deployment of ATC in areas where it is needed due to satellite signal blockage will not harm Inmarsat's operations. This is particularly true given the technical and economic limitations on Inmarsat's services. All the evidence, including statements by Inmarsat elsewhere and in other proceedings, supports the Bureau's determination that Inmarsat terminals will not operate in any material way in areas where MSV's ATC base stations will be located. BGAN will never be competitive with terrestrial wireless service: BGAN equipment is priced at about $1600, is big and bulky, and requires precise pointing and

line of sight to a satellite. Furthermore, BGAN simply is not practical in markets where customers have terrestrial wireline and wireless options. BGAN service costs over one hundred times more than a faster terrestrial wireless service, at a whopping $11/megabyte (compared with $0.08/megabyte for existing terrestrial service). The high cost and limited utility of Inmarsat's service are the inevitable results of its inefficient spectrum use and limited overall system capacity. Objective analysts expect Inmarsat to serve fewer than five thousand land mobile customers in all of North America by 2010, virtually all of whom will be price-insensitive users operating in remote areas where no terrestrial alternatives exist, and where MSV will have no need to deploy ATC base stations in the first place. With unintended but inescapable irony, Inmarsat complains that ATC will make "swiss cheese" of its coverage; in fact, holes are endemic to all mobile satellite services in densely populated areas and will be filled -- not created -- by deployment of ATC.

In granting MSV's ATC application, the Bureau correctly concluded that Inmarsat terminals were very unlikely to suffer interference from ATC base stations under the limited waivers granted here. In truth, as MSV hopes the Commission finds in the ATC rulemaking, the Bureau could have granted MSV much more flexibility. Moreover, as MSV's Technical Appendix demonstrates, if Inmarsat is truly concerned about protecting its users from ATC base stations, there are many standard, inexpensive improvements Inmarsat can require of equipment manufacturers that would reduce their potential sensitivity.

In short, the Bureau carefully considered all aspects of MSV's ATC application under a very conservative standard, granted a few limited conditional waivers, and deferred many of MSV's other requests pending reconsideration of the ATC rules. MSV looks forward to completion of that proceeding, where the record strongly supports additional technical flexibility

for MSS-ATC operations to meet consumer needs. Spectrum is too valuable to waste, particularly in the face of a shrinking number of wireless competitors and the need for additional public safety communications. The Commission has long recognized this problem and has taken a leadership role in bringing about spectrum reform, supported fully by the Administration and Congress. By upholding the Bureau's decision and taking further steps in the pending ATC rulemaking, the Commission will strengthen the role of the United States as the world leader in facilitating efficient and innovative use of spectrum.

Table of Contents

Summary i

Table of Contents vi

Background 1

Discussion 7

I. The Bureau Acted Within the Scope of Its Delegated Authority 7

II. The Bureau Maintained the Status of Satellite Service as Primary 9

Conclusion 21

Exhibit A -- Technical Appendix

Exhibit B – Trade Press Reviews of BGAN Service

Technical Certification of Dr. Peter D. Karabinis, Vice President & Chief Technical Officer of MSV

Before the
FEDERAL COMMUNICATIONS COMMISSION
Washington, D.C. 20554

In the Matter of	)	
	)	
Mobile Satellite Ventures Subsidiary LLC	)	
	)	
Application for Minor Modification of Space Station License (AMSC-1)	)	File No. SAT-MOD-20031118-00333
	)	
Minor Amendment to Pending Application to Launch and Operate a Next-Generation Replacement MSS Satellite System	)	File No. SAT-AMD-20031118-00332
	)	
Application for a Minor Modification of Blanket License to Operate Mobile Earth Terminals with MSAT-1	)	File No. SES-MOD-20031118-01879

OPPOSITION OF MOBILE SATELLITE VENTURES SUBSIDIARY LLC TO APPLICATION FOR REVIEW OF INMARSAT VENTURES LTD.

Mobile Satellite Ventures Subsidiary LLC ("MSV") hereby submits this Opposition to the Application for Review filed by Inmarsat Ventures Ltd. ("Inmarsat")[1] of the decision of the International Bureau granting MSV authority to operate an Ancillary Terrestrial Component ("ATC") in the L-band.[2]

Background

MSV. MSV is pioneering the use of terrestrial facilities to transform Mobile Satellite Service ("MSS") into a high-quality, affordable service, creating the improved coverage, capacity, and economies of scale needed for a consumer service. MSV built the first regional MSS system and knows first-hand both the opportunities for a successful MSS business and the

---

[1] Inmarsat Ventures Limited, Application for Review, File No. SAT-MOD-20031118-00333, File No. SAT-AMD-20031118-00332, File No. SES-MOD-20031118-01879 (December 8, 2004) ("*Inmarsat AFR*").

[2] *See Mobile Satellite Ventures Subsidiary LLC, Order and Authorization*, DA 04-3553 (Chief, International Bureau, November 8, 2004) ("*MSV ATC Decision*").

limitations of such a business without the added coverage and capacity provided by a terrestrial component. Previously, MSS operators – including MSV – have served narrow but important markets where there were almost no other communications alternatives. Important examples are public safety, mining and exploration, and maritime. Approximately 40% of MSV's overall direct revenue is estimated to come from public safety accounts at the Federal, regional, and state levels and from non-governmental organizations. Because the satellite-only markets for these services are small, however, there have not been the economies of scale needed to drive down equipment and service prices.

The predecessor to MSV, American Mobile Satellite Corporation, filed the application for what has become XM Satellite Radio which, together with Sirius Satellite Radio, became the first satellite providers to overcome the limitations of satellite signal blockage by building a hybrid satellite and terrestrial network. The satellite radio companies have demonstrated that even a geographically-small terrestrial network provides the improved coverage that makes a true consumer service possible. Economies of scale and scope are created that are otherwise impossible for satellite services that operate in a mobile environment.[3]

Since filing the first ATC application nearly four years ago,[4] MSV has spent millions of dollars developing the intellectual property needed to make its revolutionary system work and

---

[3] *See Flexibility for Delivery of Communications by Mobile Satellite Service Providers in the 2 GHz Band, the L-Band, and the 1.6/2.4 GHz Bands, Report and Order*, 18 FCC Rcd 1962, FCC 03-15, IB Docket No. 01-185 (February 10, 2003) ("*ATC Order*"), at ¶ 32 ("By taking advantage of potential integration of services, MSS operators may also obtain economies of scale: larger customer bases could provide the opportunity to support larger production volumes and, therefore, lower costs for handsets and other equipment.").

[4] *See* Application of Motient Services Inc. and Mobile Satellite Ventures Subsidiary LLC, File No. SAT-ASG-20010116-00010 *et al.* (Jan. 16, 2001).

has raised millions more to begin implementing its vision for the system.[5] MSV's discussions with potential partners have reinforced its conviction that the MSS L-band can be put to use in the very near future to provide exciting new services benefiting millions of Americans while protecting existing operators and their users.

MSV's service will be available everywhere in North America, including underserved rural areas. In effect, MSV's concept means that rural users can for the first time take advantage of the scale economies of a mass market offering, just like users in urban areas. And the applicability of MSV's system to homeland security is obvious: it works everywhere, and it will keep working even when towers are down throughout a wide area.

ATC Order. The Commission issued rules in February 2003 permitting MSS licensees to integrate a terrestrial component into their satellite systems.[6] The Commission's order hailed the value of ATC, finding that the expanded authority would promote the efficient use of MSS spectrum, allow MSS providers to offer ubiquitous service by overcoming coverage gaps in densely populated areas, and achieve economies of scale that will dramatically reduce the cost of MSS equipment and service, promote public safety and national security, and increase competition.[7] For ATC in the MSS L-band, the Commission adopted unique and more stringent technical limitations relative to S-band and Big LEO ATC operations.[8] The *ATC Order* is

---

[5] MSV has raised more than $300 million since it was formed in 2000 to pursue ATC. It has also invested the free cash flow of the existing satellite businesses, which cost about $1 billion to create during the 1990s.

[6] *See ATC Order.* In July 2003, the Commission clarified the ATC application process. *See Flexibility for Delivery of Communications by Mobile Satellite Service Providers in the 2 GHz Band, the L-Band, and the 1.6/2.4 GHz Bands, Order on Reconsideration*, IB Docket No. 01-185, FCC 03-162 (July 3, 2003) ("*ATC Sua Sponte Order*").

[7] *ATC Order* ¶ ¶ 1, 21, 23, 24, 29, and 32.

[8] *See, e.g.*, 47 C.F.R. § 25.253(c) (imposing unique reuse limitation on L-band ATC); *compare* 47 C.F.R. § 25.253(d) (L-band base station power limit) *with* 47 C.F.R. § 25.252(a)(2) (higher S-

consistent with a long line of Commission spectrum management decisions aimed at increasing the efficient use of spectrum.[9] Recent initiatives by the Administration and Congressional leaders echo this effort. Just last month, President Bush reiterated that improved spectrum management policy is critical to economic growth, homeland security, and maintaining America's global leadership in communications technology.[10]

MSV's ATC Application. On November 18, 2003, pursuant to the new ATC rules, MSV filed the first application to operate an Ancillary Terrestrial Component, in connection with the existing and planned L-band MSS systems of MSV and Mobile Satellite Ventures (Canada) Inc.[11] The application conformed to the basic principle of the ATC rules, that satellite service

---

band base station power limit) *and* 47 C.F.R. § 25.254(a)(1) (higher Big LEO base station power limit); *see also ATC Order* ¶¶ 128-188 and Appendix C2 (explaining unique technical restrictions imposed on L-band ATC).

[9] One of the major findings of the Commission's Spectrum Policy Task Force ("SPTF") is that "Advances in technology create the potential for systems to use spectrum more intensively and to be much more tolerant of interference than in the past." *Spectrum Policy Task Force Report*, ET Docket No. 02-135 (Nov. 1, 2002), at § 2. The SPTF concluded that "to increase opportunities for technologically innovative and economically efficient spectrum use, spectrum policy must evolve towards more flexible and market-oriented regulatory models." *Id.*; *see also Flexible Service Offerings in the Commercial Mobile Radio Services, First Report and Order*, 11 FCC Rcd 8965 (1996) (granting terrestrial CMRS carriers authority to provide fixed services in mobile service bands); *Amendment of Parts 2 and 25 of the Commission's Rules, First Report and Order*, 16 FCC Rcd 4096 (2000) (finding terrestrial facilities can operate in the 12.2-12.7 GHz band without causing harmful interference to incumbent Direct Broadcast Satellite (DBS) operations); *Amendment of Part 2 of the Commission's Rules, First Report and Order*, 16 FCC Rcd 17222 (2001) (adding a mobile allocation to the wireless cable frequency band (2500-2690 MHz band)); *XM Radio, Inc., Order and Authorization*, 16 FCC Rcd 16781 (Int'l Bur. 2001) (granting temporary authority to satellite radio licensee to use terrestrial repeaters to supplement satellite coverage in urban areas).

[10] Presidential Determination, *Improving Spectrum Management for the 21st Century* (November 30, 2004) (available at http://www.whitehouse.gov/news/releases/2004/11/20041130-8.html) (November 30, 2004); Federal Government Spectrum Task Force, *Spectrum Policy for the 21st Century – The President's Spectrum Policy Initiative: Report 1* at 25 (June 2004).

[11] *See* Application of Mobile Satellite Ventures Subsidiary LLC, File No. SAT-MOD-20031118-00333, File No. SAT-AMD-20031118-00332, File No. SES-MOD-20031118-01879 (filed November 18, 2003) (collectively, "*MSV ATC Application*"). In an August 2, 2004 letter, MSV

would cover the vast majority of the U.S. land mass, with terrestrial networks used in densely-populated areas with topographies that make satellite service impractical and unreliable. MSV requested some variances from and waivers of the Commission's rules to allow it to increase terrestrial frequency reuse and to increase the output power for base stations.[12] The key to the application and the requested waivers is that, if granted in full, they will allow MSV to provide enough coverage and capacity to serve tens of millions of users, thus opening the door for the production of MSS user equipment equivalent in size and cost to cellular and PCS equipment, and enabling the launch of two next-generation satellites with many times more capacity than existing satellites.[13]

On November 8, 2004, the Bureau granted MSV's application, thereby authorizing MSV to become the first MSS licensee to operate ATC. The Bureau granted some of MSV's variance and waiver requests with restrictions and deferred the other requests to the *ATC Order* reconsideration proceeding.[14]

---

provided the Bureau with a list of the core elements of its ATC application for which it requested expedited approval. *See* Letter from Lon C. Levin, Vice President, MSV, to Ms. Marlene H. Dortch, FCC, File No. SAT-MOD-20031118-00333 et al (August 2, 2004).

[12] MSV raised similar issues in its response to the *ATC Order*. *See* MSV, Petition for Partial Reconsideration and Clarification, IB Docket No. 01-185 (July 7, 2003) ("*MSV Recon Petition*"); *see also* Letter from Bruce D. Jacobs, Counsel for MSV, to Ms. Marlene H. Dortch, FCC, IB Docket No. 01-185 (November 18, 2003) (clarifying requested relaxation in power flux density ("PFD") limits for ATC base stations near airport runways/aircraft stand areas and waterways).

[13] MSV has made great progress with the design and procurement of its next-generation satellites. Assuming favorable action on reconsideration of the *ATC Order*, MSV currently plans to conduct a competitive procurement in 2005, leading to a launch of its first next-generation satellite by 2009 with a second satellite to follow one year later.

[14] The Bureau deferred to the Commission regarding: increasing terrestrial reuse of L-band spectrum based on a 6% $\Delta T/T$ co-channel intersystem interference allowance (*MSV ATC Decision* at ¶¶ 46-49), 80% deployment of system-wide ATC in the United States (*id.* at ¶¶ 50-51), unlimited reuse of non-co-channel frequencies (*id.* at ¶¶ 61-64), use of interference cancellation techniques to mitigate self-interference (*id.* at ¶¶ 57-60); and relaxation of the Power

Inmarsat Application for Review. Consistent with its practice of reflexively opposing MSV's attempts to provide a better service,[15] Inmarsat has filed an Application for Review of the Bureau's decision. *See Inmarsat AFR.*[16] In its filing, Inmarsat claims that the Bureau exceeded its authority and effectively made terrestrial service primary rather than secondary. Inmarsat complains specifically about the Bureau's decision to increase permitted base station power and relax the overhead gain suppression limit, recognize the impact on interference of spatially-averaging a mobile terminal antenna, and accept MSV's showing of sufficient structural attenuation. According to Inmarsat, interference with its transportable terminals would jeopardize "the ability of all Americans to have access to broadband MSS service." *Id.* at 4, 6, 15, 22. Inmarsat boasts that its new BGAN system will "revolutionize the MSS industry" and that it expects major growth in its land-mobile and aeronautical business in the United States. *Id.* at 5, 7-8. It characterizes BGAN as "competitive with third generation terrestrial wireless networks (3G) in terms of both price and service quality." *Id.* at 5. Inmarsat also complains that MSV is operating a "wounded" satellite that may never be replaced,[17] has increased its plans for

---

Flux Density restrictions on base stations near airport runways/aircraft stand areas and waterways (*id.* at ¶¶ 72-75).

[15] *See* Opposition of Inmarsat Ventures Ltd., File No. SAT-MOD-20031118-00333; File No. SAT-AMD-20031118-00332; File No. SES-MOD-20031118-01879 (March 25, 2004) ("*Inmarsat Opposition*").

[16] Although it now claims not to oppose the introduction of ATC, Inmarsat has consistently done just that. Representatives of MSV and Inmarsat have met many times since June 2004. Unfortunately, MSV's technical, regulatory, and business proposals have always fallen on deaf ears. MSV had hoped that with new management Inmarsat might recognize the benefits of ATC and be more cooperative. MSV was encouraged when Inmarsat did not oppose MSV's request for expedited processing of the core elements of its application. MSV remains committed to trying to work constructively with Inmarsat regardless of the outcome of this proceeding.

[17] While Inmarsat claims that MSV's satellites are "wounded," both the satellites of MSV and MSV Canada in fact should be operational at least until the next-generation satellites are launched.

ATC capacity, and "reneged" on its offer to use base station antennas with greater overhead gain suppression. *Inmarsat AFR* at 5-6.

Discussion

The Bureau's decision was fully justified. Notwithstanding Inmarsat's contentions, the Bureau did not act outside of its delegated authority, rewrite the ATC rules, undermine the principles underlying the rules, or promote ATC to primary status. To the contrary, the Bureau was overly cautious. Indeed, the evidence and Commission policy support further relaxation of the limits on L-band ATC operation, which MSV urges the Commission to adopt in its upcoming decision in the ATC rulemaking. MSV addresses the technical aspects of the interference issues in more detail in the attached Technical Appendix. In the discussion below, MSV responds to Inmarsat's legal arguments.

I. THE BUREAU ACTED WITHIN THE SCOPE OF ITS DELEGATED AUTHORITY

The Bureau's decision to grant ATC authority to MSV was done well within the existing rules established by the Commission in the *ATC Order*. The Bureau granted only a small number of conditional waivers that it determined would "afford MSV flexibility to operate more efficiently without causing additional interference." *MSV ATC Decision* at ¶ 1.

Inmarsat claims that in granting these waivers, the Bureau acted outside the scope of its delegated authority. *Inmarsat AFR* at 1-2. But Inmarsat's contention ignores the Bureau's broad authority to grant waiver or variance requests.[18] While the Bureau cannot act on applications

[18] *See* 47 C.F.R. §0.261(a)(4) (providing the Bureau with delegated authority "without limitation" to "to act upon applications for international and domestic satellite systems and earth stations"); *Application of Delta Radio, Inc. for a Construction Permit for a New FM Station at Greenville, Mississippi*, 18 FCC Rcd 16889, ¶ 6 (2003) ("We reject Delta's contention that the Bureau lacked authority to decide its waiver request because the Commission had not previously considered the exact arguments or circumstances Delta presented."); *PanAmSat Corp.; Application for Modification of Conditional Authority to Construct a Subregional Western*

that raise "new or novel arguments," "present facts or arguments which appear to justify a change in Commission policy," or "cannot be resolved under outstanding precedents and guidelines,"[19] none of MSV's waiver or variance requests rose to this level. There was nothing new or novel about MSV's request that the Bureau waive certain ATC technical restrictions based on a showing that harmful interference would not result. The Commission's Bureaus routinely waive technical restrictions based on a finding that the waiver will not result in harmful interference.[20] Moreover, precedent establishes that nothing precludes the Bureau from acting on

---

Hemisphere Satellite System, 60 RR 2d 398, ¶ 54 (1986) (upholding International Bureau's waiver of financial standards "in view of the fact that the Bureau's waiver is limited, does not undermine our financial standards policy, and is supported by cogent public interest considerations"); *Applications for Station WKVE, Semora, North Carolina*, 18 FCC Rcd 23411, ¶ 9 (2003) (upholding Media Bureau's authority to grant equitable waivers based on general Commission policy even in the absence of particularized precedent).

[19] 47 C.F.R. § 0.261(b)(1).

[20] *See, e.g, Access Spectrum, LLC Request for Waiver of Section 27.60*, DA 04-2527, ¶ 15 (Wireless Telecommunications Bureau, 2004) (waiving technical requirements of Section 27.60 of the Commission's rules to permit land mobile base station operations within broadcast station's Grade B contour after finding that the zone of possible interference was "very small" and a lack of record evidence demonstrating that broadcast receivers would exist in the zone of interference); *Star One S.A., Petition for Declaratory Ruling to Add The Star One C1 Satellite at 65° W.L. to the Permitted Space Station List*, DA 04-2614, ¶¶ 10-11 (Satellite Division, International Bureau, 2004) (waiving switchable polarization and cross-polarization isolation requirements upon a finding that no harmful interference would result); *Hispasat S.A., Petition for Declaratory Ruling For Inclusion of Hispasat-1B on the Permitted Space Station List*, 18 FCC Rcd 3277, ¶ 19 (Satellite Division, International Bureau, 2003) (waiving the Commission's frequency reuse requirements for FSS operators and allowing continued operations upon finding of no increase in harmful interference); *New Skies Satellites N.V., Petition for Declaratory Ruling*, 17 FCC Rcd 10369, ¶ 18 (Satellite Division, International Bureau, 2002) (granting New Skies a waiver of the two degree spacing requirement upon finding no potential for interference with existing satellites); *EchoStar Satellite Corporation, Memorandum Opinion and Order*, 15 FCC Rcd 23636 (Satellite Division, International Bureau, 2000) (granting EchoStar a waiver of the Commission's rule specifying power limits for DBS systems based upon a finding of no increase in potential interference); *Motorola Satellite Communications, Inc.*, 11 FCC Rcd 13952, ¶ 19 (International Bureau, 1996) (granting Motorola a waiver of feeder-link power limits to permit operations in "power-boost" mode upon a finding of negligible interference);; *Letter to Calvary Chapel of Twin Falls, Inc. and Donald E. Martin, P.C.* (Audio Services Division, Mass Media Bureau, October 29, 1998) (permitting overlapping broadcast contours upon showing that overlap area had negligible population, and thus minimal relevant interference).

applications or waiver requests when the Commission is simultaneously considering the same issues in a separate, pending proceeding.[21] In granting MSV's ATC application, the Bureau has not modified any Commission policy. To the contrary, the Bureau's decision is entirely consistent with established Commission policy -- as affirmed in the *ATC Order* -- that licensees should be afforded flexibility provided that no harmful interference is caused to other spectrum users.

II. THE BUREAU MAINTAINED THE STATUS OF SATELLITE SERVICE AS PRIMARY

By allowing MSV additional flexibility with respect to deployment of its ATC network, the Bureau did not elevate ATC to primary status or relegate satellite service to secondary status. *Inmarsat AFR* at 2. MSS remains protected from interference from ATC and ATC remains ancillary to MSS.[22] The Bureau's decision is well within the parameters of Commission precedent for hybrid networks. For example, the Big LEO and S-band MSS licensees remain substantially less restricted than L-band MSS licensees in their ability to provide ATC. These other licensees have no restrictions on the amount of frequency reuse they are permitted and their

---

[21] *See Comsat Petition for Declaratory Ruling, Memorandum Opinion and Order*, 11 FCC Rcd 10011, ¶ 5 (International Bureau, 1996) (conditionally approving Comsat's non-structural safeguard plan while a petition for reconsideration was pending of the Commission's decision adopting the requirement for the plan; holding that "the filing of a petition for reconsideration does not estop the Bureau" from taking action).

[22] Inmarsat incorrectly claims that MSV is contemplating a "nationwide cellular or PCS buildout," contrary to MSV's original proposal for ATC. *Inmarsat AFR* at 5. Inmarsat ignores the fact that MSV has no economic incentive to build base stations in the vast parts of the country where ATC is not needed. It is true that, just as MSV will be building high-capacity next generation satellites, it also plans to operate an ATC that reaches a scale that helps create a consumer market. In both cases, MSV is responding to expanding consumer needs. As wireless customers demand more services, including data services, the average user's capacity requirements have increased dramatically, multiplying as much as four-fold in the past five years, with the trend expected to continue. UBS Investment Research, "Wireless Telecommunications Report" (October 21, 2004), at 11.

base stations may operate at much higher power levels than those allowed MSV in the Bureau's order.

Satellite service remains at the core of what the Bureau has authorized for MSV. The Commission's requirements as to integrated service were unaffected by the Bureau's order. Moreover, even with ATC, MSV will rely primarily on satellites to cover the United States. Key markets which benefit uniquely from the availability of satellite coverage -- such as public safety and rural areas -- will continue to be served by satellite, but will now enjoy dramatically more reliable coverage and assured emergency services with the addition of ATC, particularly in densely populated areas. As in the case of XM Satellite Radio and Sirius Satellite Radio, the hybrid network makes the satellite offering technically stronger, more reliable, and more commercially viable.

With its order, the Bureau simply weighed the information placed before it, and made the kind of decision it makes every day, one which reflects the Bureau's experience and best judgment of the proper balance to be struck in order to serve the public interest. Essentially, Inmarsat alleges that the Bureau's order strikes the wrong balance. Inmarsat could not be more wrong. If anything, the Bureau needlessly tipped the balance in favor of protecting Inmarsat.

In its Application, Inmarsat makes six primary points in support of its broadside attack on what the Bureau has done. *First*, Inmarsat claims that users of its service, particularly its BGAN service, will be prevented from operating in the same areas that ATC base stations are located. In support of this claim, Inmarsat touts its next-generation BGAN service as "competitive with third generation terrestrial wireless networks (3G) in terms of both price and service quality." *Inmarsat AFR* at 5. The Bureau cannot be faulted for dismissing this claim, because the claim is wrong, as demonstrated by both the facts and the evidence Inmarsat itself has presented to the

Commission. Inmarsat's BGAN service is too expensive and difficult to use to be more than a niche service, and one of commercial use only in remote locations.[23] BGAN service will require the purchase of a terminal which costs about $1600 and payment of $11 per megabyte for service. One expert estimates that Inmarsat will have only about 4200 land-transportable broadband terminals operating in all of North America in 2010[24] and the only way they would be used in densely populated areas is if a customer chose to ignore all of the economic and practical reasons for using terrestrial wireline and wireless alternatives that are substantially cheaper and easier to operate. Inmarsat's own statements before the Commission in other proceedings admit as much.[25] Even Inmarsat's CEO has predicted that Inmarsat will experience no more than single-digit growth in the minimal expected BGAN penetration in the United States.[26]

---

[23] *See* Exhibit B; Martin Courtney, "Inmarsat BGAN Satellite Terminal: An interconnection that works almost anywhere – for those that can tolerate high prices and slow data rates," *IT Week* (February 25, 2004) ("The regional BGAN is better suited to truly mobile users who work outside in very remote areas where broadband options are non-existent, GSM and GPRS coverage is patchy or unavailable, and even dial-up analogue lines are hard to find."); Guy Kewney, "Hands on Mobile Computing – The Middle of Nowhere But Still Connected," *Personal Computer World* (November 1, 2004); "Regional Satellite: A new beginning for BGAN," *Total Telecom Magazine* (August 4, 2004).

[24] Northern Sky Research, *Next Generation Mobile Satellite Services*, Table 3-15.

[25] Comments of Inmarsat Ventures plc, IB Docket No. 99-67 (February 19, 2003) ("*Inmarsat 911 Comments*"), at 10-11 (stating that the BGAN service (i) will "establish a virtual office in remote locations"; (ii) will require terminals that are "no smaller than the size of small laptops"; (iii) "will need to be used with a direct line of sight to an Inmarsat satellite"; and (iv) will require the antenna to be "manually oriented towards the satellite and will not be usable while the terminal is in motion"). The Commission relied on these statements in its decision exempting BGAN terminals from 911 obligations. *Report and Order*, 18 FCC Rcd 25340 (December 1, 2003) ("*MSS 911 Report and Order*"), at ¶ 28. MSV has committed to supporting E911 for MSS/ATC networks, provided the unique aspects of the satellite segment are taken into account, such as the lack of a local presence in many areas that eliminates the ability for direct interconnection with Public Safety Answering Points ("PSAPs"). *See* Comments of Mobile Satellite Ventures Subsidiary LLC, IB Docket No. 99-67 (February 19, 2003). The Commission as well as MSV have previously recognized that hybrid satellite/terrestrial service and terrestrial-only service are imperfect substitutes given the unique coverage capabilities and service offerings of a hybrid satellite/terrestrial service. *See* Reply Comments of Mobile Satellite

There is simply no demand for expensive and unwieldy land-transportable MSS terminals when wireline providers, terrestrial wireless providers, and even Fixed Satellite Service ("FSS") operators offer the same service at significantly lower prices.[27] These high costs are the inevitable result of Inmarsat's inefficient use of spectrum and limited overall system capacity.[28] Without ATC, Inmarsat will forever remain in a vicious cycle of low capacity, high prices, and few customers. ATC, however, provides for the coverage, capacity, and economies of scale needed to overcome this vicious cycle with a virtuous one of affordable equipment and service that puts the spectrum to use from the most densely populated urban cores to the most remote areas. Conversely, the vast majority of the demand for BGAN is expected to come from remote developing regions rather than the United States. Moreover, before Inmarsat even begins service, it must launch its next-generation I-4 satellites. None of the three I-4 satellites that are

---

Ventures Subsidiary LLC, IB Docket No. 99-67 (March 25, 2003), at 16; *see also ATC Order* ¶ 39.

[26] Inmarsat's CEO has also stated that only 0.5% of Inmarsat's revenues are derived from land-mobile operations in the United States. *See* Communications Daily (August 25, 2004) (quoting Inmarsat CEO Andrew Sukawaty).

[27] Inmarsat's contention that BGAN service is entitled to protection as a primary service has no legal support. BGAN terminals are fixed earth stations because they cannot be used in motion. *Second Report and Order*, 9 FCC Rcd 1411, ¶ 38 (1994), *see Inmarsat 911 Comments* at 10-11 (stating that the BGAN terminal will require the antenna to be "manually oriented towards the satellite and will not be usable while the terminal is in motion"). Fixed services are authorized in MSS bands, but only on a secondary basis. *AMSC Licensing Order*, 4 FCC Rcd 6041, ¶ 51 (1989); *Motorola Satellite Communications, Inc., Order and Authorization,* 11 FCC Rcd 13952, ¶ 11.

[28] The high costs of Inmarsat user equipment and service, such as for BGAN, is the inevitable result of its inefficient use of spectrum. Inmarsat's next-generation satellites (called the Inmarsat-4 or I-4 satellites) are several times more powerful than the current generation of Inmarsat satellites, but have only 1/8th the power of the satellites MSV is negotiating to purchase. MSV estimates that Inmarsat's entire global I-4 satellite system will have sufficient power and bandwidth to support no more than roughly 80,000 broadband subscribers with reasonable average throughput rates, and, if Inmarsat ever launches an I-4 to serve North America, this system will be able to support only about 15,000 broadband users within the United States. This small number of users will leave Inmarsat equipment manufacturers and service providers with no choice but to charge high prices.

being built has yet been launched. According to Inmarsat's statements to investors, the first two will be located at 64° E.L. and 53° W.L., respectively, and so will not be capable of fully covering the United States, and the third will be a ground spare.[29] As with many of the statements in its Application for Review, what Inmarsat asserts now does not square with what it has said in the past.[30]

Second, Inmarsat prominently cites a recent contract received by one of its resellers (Stratos) to provide services to the Fire Department of the City of New York ("FDNY"), with the implication of public harm that will arise as a result of the Bureau's order. *Inmarsat AFR* at 12.[31] Inmarsat does not provide the details of the contract, but MSV understands that it pertains only to a small number of $15,000 terminals, many of which will be installed on the roofs of fire stations and used for back-up communications. Inmarsat's discussion purports to create the impression that Inmarsat is somehow uniquely positioned to provide critical emergency services. Quite the opposite is true. In fact, MSV has an unparalleled history of using satellites to serve the communications needs of the public safety, including the police and fire departments in New York City (FDNY has been a customer since 1998), the New York State Office of Emergency Management, Port Authority of New York and New Jersey, United States Coast Guard, Federal

---

[29] Inmarsat Finance plc, Form F-4 Registration Statement -- Exchange Offer for 10 3/8% Senior Discount Notes due 2012 (November 30, 2004) at p. 94; Inmarsat Finance II plc, Amendment No. 1 to Form F-4 Registration Statement -- Exchange Offer for 10 3/8% Senior Discount Notes due 2012 (December 17, 2004) at p. 94.

[30] Inmarsat criticizes the Bureau for not taking into account what it says are plans to launch I-4s into orbital locations that would improve its coverage of the United States. *Inmarsat AFR* at 11-12. The Bureau, however, cannot be faulted for not considering "information" that Inmarsat raised for the first time in its Application for Review. 47 C.F.R. § 1.115(c). Moreover, as Inmarsat's own statements to potential investors reveal, there is at least conflicting evidence whether Inmarsat will launch any such new satellites and, no evidence that, if it does, those satellites would be able to operate co-channel with MSV's satellites.

[31] The Bureau's decision, of course, has no potential impact on aeronautical or maritime safety services, since it maintains the existing power flux density limits near airports and waterways.

Emergency Management Agency ("FEMA"), Center for Disease Control and Prevention ("CDC"), American Red Cross, California Office of Emergency Services, Connecticut Department of Public Health, Miami-Dade County (FL) Fire Rescue, and New Mexico State Police, to name just a few. MSV stepped forward to provide emergency services during the events of September 11, 2001, during the fires in California and the blackout in the Northeast during 2003, and during the recent hurricanes in Florida.

This wealth of experience also means MSV understands the limitations of satellite service, particularly in an urban environment, and the desperate need of public safety for a better product, one that is much lighter, more affordable, and can be used inside buildings. With the addition of ATC, MSV will be able to offer equipment and services that meet just that need. Combined with MSV's existing push-to-talk dispatch capability, first responders everywhere will have functionality that is leaps and bounds ahead of anything satellite-only or terrestrial-only can offer today. Thus, the Bureau's decision in no way negatively affects the availability of public safety services; to the contrary, the Bureau's order provides greater assurance that public safety will be served in the United States.

Third, Inmarsat posits that the success of Direct Broadcast Satellite ("DBS") and FSS operators in urban areas proves that BGAN will succeed in urban areas. To the contrary, Inmarsat's BGAN service is dissimilar to those of DBS and FSS in ways that make it both financially and technically unattractive in urban areas. DBS operators have unlimited capacity to add new customers, which enables them to offer a price-competitive, multi-channel video service in urban areas in a way that an MSS provider (without ATC) will never be able to do. The same is true for FSS operators in urban areas, whose success is based on their ability to offer affordable, high-volume services using hundreds of megahertz of spectrum, which MSS

operators will never be able to match. Moreover, while consumer DBS and FSS have their own challenges in a densely-populated environment, at least they are fixed services and can rely on carefully mounted antennas. In contrast, MSS must contend with the user's mobility, which is virtually impossible to accomplish reliably without ATC. ATC gives MSS operators the reliability needed to offer the kind of service that will be valued and used by millions of Americans.

Fourth, Inmarsat claims that the Bureau gave insufficient consideration to interference problems. In fact, the Bureau appropriately determined that the area of potential interference surrounding an ATC base station would be small even in the unlikely event that Inmarsat terminals and ATC base stations were operated in the same area. The Bureau used the same technical analysis the Commission used in the *ATC Order* to calculate that at the higher power level the area of potential interference would increase from roughly 100 meters to 200 meters. *MSV ATC Decision* at ¶ 81.[32] The Bureau reasonably concluded that this was unlikely to be problematic for Inmarsat's land-mobile service because there is a very low probability that these terminals will ever be located in the same region as an ATC base station, let alone within 200 meters. *Id.* In light of the proven inability of MSS without ATC to establish a land-mobile business in the United States, no other conclusion would be reasonable. In fact, putting aside that these land-mobile terminals will virtually never be used in the populous areas where ATC base stations are located, the attached Technical Appendix demonstrates that the total area of

[32] MSV demonstrated that a 15 dB increase in power would not result in harmful interference, and NTIA determined that a 12 dB increase would not result in harmful interference. *See MSV ATC Application* at Appendix J; Letter from Fredrick R. Wentland, National Telecommunications and Information Administration, to Edmond J. Thomas, Chief, Office of Engineering and Technology, FCC (April 21, 2004), at 1, 16.

potential interference impacting Inmarsat terminals is less than 0.04% of the nation's land mass.[33]

Fifth, Inmarsat complains about the Bureau's new procedure for prior coordination of higher-power base stations. *Inmarsat AFR* at 13, 24. In fact, this is yet another example of the Bureau's conservative approach in granting MSV's application. The Bureau concluded appropriately that authorizing an increase in base station power would not result in harmful interference to Inmarsat. *MSV ATC Decision* at ¶ 81. The prior coordination procedure is thus an unnecessary, additional layer of protection afforded to Inmarsat users. Although the extra protection is unnecessary, MSV is nonetheless committed to cooperating with Inmarsat and the Commission in implementing the prior coordination procedure. One might have thought that Inmarsat would appreciate the extra protection. Instead, Inmarsat disingenuously tries to turn this process back against the Bureau. The prior coordination procedure does not in any way alter the rule requiring MSV to operate ATC on a non-harmful-interference basis. 47 C.F.R. § 25.255. The prior coordination procedure also does not result in an impermissible modification of any license in violation of Section 316 of the Communications Act, as Inmarsat claims. *Inmarsat AFR* at 17. To the contrary, the coordination procedure is a reasonable approach for

---

[33] *See* Technical Appendix at n.5. Contrary to Inmarsat's claim, the Bureau did not ignore relevant evidence concerning the susceptibility of Inmarsat terminals to interference or Inmarsat's alleged plans to launch new satellites in orbital positions that would provide coverage in the United States. *Inmarsat AFR* at 11-12, 23. The receiver sensitivity data is irrelevant because the Bureau's decision to permit MSV to increase its base station power was based on its conclusion that Inmarsat terminals are highly unlikely to operate within the vicinity of an ATC base station, not on the specific vulnerability of any particular terminal. *MSV ATC Decision* at ¶¶ 80-82. The irrelevance of the overload threshold of Inmarsat land-transportable terminals is further demonstrated by the fact that the Bureau referred to its ongoing testing of the susceptibility of Inmarsat terminals only in its discussion explaining its refusal to relax PFD limits for base stations near airports and waterways. *MSV ATC Decision* ¶ 75. Because all the evidence points to an extraordinarily low likelihood that land transportable Inmarsat terminals will ever be located in the vicinity of an ATC base station, the overload threshold of those terminals is not relevant.

providing Inmarsat with an optional additional layer of protection in a situation in which interference is highly unlikely in the first place.[34] In other cases, the Commission has determined that authorizing a service on a secondary basis, such as ATC, does not modify the existing rights or obligations of primary licensees, because the primary licensees are not required to accept harmful interference.[35] In addition, the courts have made abundantly clear that speculative interference claims do not satisfy the burden required for a Section 316 claim.[36]

Sixth, Inmarsat contends that the Bureau's decision to grant MSV increased flexibility in the downlink direction violates the Commission's requirement for incremental deployment of ATC facilities. *Inmarsat AFR* at 3. This is wrong. In the *ATC Order*, the Commission

---

[34] *See AirCell, Inc., Memorandum Opinion and Order*, 15 FCC Rcd 9622, ¶ 32 (2000) (holding that notification and coordination procedures that encouraged, but did not obligate, potential victims of interference to cooperate with alleged source of interference did not modify any licenses because potential victims of interference were not subject to any new obligations or changes in their rights or responsibilities), affirmed in part and remanded in part, *AT&T Wireless Services, Inc., et al., v. FCC*, 270 F.3d 959 (D.C. Cir. 2001), *Order on Remand*, 18 FCC Rcd 1926 (2003), petition for review denied, *AT&T Wireless Services, Inc., et al., v. FCC*, No. 03-1043 (D.C. Cir. 2004).

[35] *AirCell, Inc., Order*, 14 FCC Rcd 806, ¶ 21 (Chief, Wireless Telecommunications Bureau, 1998) ("Neither section 316 of the Communications Act nor section 1.87 of the Commission's rules apply here because we are not modifying, directly or indirectly, the licenses of non-participating cellular licensees. We emphasize that any operation of AirCell technology is authorized on a secondary basis only. Nothing in this waiver grant modifies, in any way, the existing rights or obligations of non-participating cellular licensees. Non-participating cellular licensees are not required to accept harmful interference, nor are they required to alter their operations to accommodate AirCell operations in any way. Here, there can be no indirect modifications triggering a section 316 or section 1.87 notice and hearing requirement because authorization of the AirCell system is predicated on the demonstrated lack of harmful interference."), reconsideration granted in part, denied in part, *Order on Reconsideration*, 14 FCC Rcd 18430 (WTB 1999), application for review denied, *Memorandum Opinion and Order*, 15 FCC Rcd 9622 (2000), affirmed in part and remanded in part, *AT&T Wireless Services, Inc., et al., v. FCC*, 270 F.3d 959 (D.C. Cir. 2001) ("Absent harmful interference, AirCell's new system does not trammel upon petitioners' rights as licensees."), *Order on Remand*, 18 FCC Rcd 1926 (2003), petition for review denied, *AT&T Wireless Services, Inc., et al., v. FCC*, No. 03-1043 (D.C. Cir. 2004).

[36] *See AMSC Subsidiary Corporation*, 216 F.3d 1154, 1160 (D.C. Circ. 2000) (finding that Section 316 does not apply when the increased likelihood of interference is too speculative).

permitted MSV to operate only 50% of its authorized co-frequency base stations in the first 18 months after deploying its first base station. *See* 47 C.F.R. § 25.253(c); *ATC Order* at ¶ 143. This incremental deployment restriction is intended to limit uplink interference, and is entirely unrelated to potential interference in the downlink direction. *Id.*[37]

To the extent Inmarsat truly believes that it can provide MSS in urban areas, then the Commission should require Inmarsat to manufacture more robust terminals that are at least as resistant to overload as other devices used in the interference environment of an urban area, such as cellular and PCS handsets. *See* Technical Appendix at 3-4 and Annex A. Terrestrial cellular and PCS handsets currently operate in interference-hostile urban areas without suffering from overload because handset manufacturers employ basic, inexpensive interference-mitigation techniques. These basic techniques include robust front-end receiver designs, use of existing power control capability, and agile front-end filtering. Inmarsat has known about L-band ATC since January 2001.[38] There is no excuse for Inmarsat to continue to support terminals designed to operate in interference-free rural and maritime environments and expect those terminals to perform in densely-populated areas.[39]

---

[37] MSV is also compelled to respond yet again to Inmarsat's claim that MSV has broken a promise to use a base station antenna with a certain degree of overhead gain suppression. *Inmarsat AFR* at 5-6. *See* Mobile Satellite Ventures Subsidiary LLC, Reply, IB Docket No. 01-185 (September 2, 2003), at 8 n.15 (noting that MSV's initial proposal regarding base station overhead gain suppression relied on statements by CSS Antenna, Inc. which were made before the Commission required L-band ATC base stations to use left-hand circular polarization ("LHCP")). MSV's request to relax the required degree of overhead gain suppression was based on an analysis demonstrating that such a relaxation would substantially decrease the cost of base stations without increasing the potential for harmful interference. The Bureau agreed, concluding that the benefits of MSV's proposal far outweighed any costs. *MSV ATC Decision* at ¶ 71 .

[38] *See* Application of Motient Services Inc. and Mobile Satellite Ventures Subsidiary LLC, File No. SAT-ASG-20010116-00010 *et al.* (Jan. 16, 2001).

[39] *See Interference Immunity Performance Specifications for Radio Receivers, Notice of Inquiry*, ET Docket No. 03-65 ("*NOI*") (March 24, 2003), at ¶ 10 ("more robust receiver performance

With respect to potential interference in the uplink direction, the Bureau accurately concluded that Inmarsat would not experience increased interference if MSV were permitted to increase co-channel reuse by 40% based on use of mobile terminals with a spatially-averaged antenna gain of -4 dBi. *MSV ATC Decision* at ¶¶ 52-56. Inmarsat agrees with the Bureau's decision, concluding that "aggregate interference impact is determined by the average MT EIRP in the direction of the Inmarsat satellite." *Inmarsat AFR*, Technical Annex at 12. While Inmarsat cannot refute the Bureau's reasoning, it asks that the Commission revise the uplink interference analysis in the *ATC Order* to account for revised parameters.

As a procedural matter, Inmarsat never raised these claims before the Bureau and it cannot raise them now in an Application for Review. 47 C.F.R. § 1.115(c). Moreover, Inmarsat had the opportunity to ask the Commission to revise its uplink interference analysis both in its Petition for Reconsideration of the *ATC Order* and in its Opposition to MSV's ATC Application. Inmarsat chose not to do so, and it is too late to do so now.

On the merits, Inmarsat's claims are merely hypothetical. Inmarsat has offered no evidence as to whether the revised interference parameters it proposes are likely to reflect real-world interference scenarios. Inmarsat's request differs greatly from MSV's request to revise the uplink interference analysis to account for MTs with a spatially-averaged antenna gain of -4 dBi. MSV provided concrete evidence of the availability of such an antenna and the impact of this degree of MT antenna gain on Inmarsat satellites. *See* MSV ATC Application, Appendix H. Moreover, the Bureau has required MSV to submit a prototype of its MT to confirm that its spatially-averaged antenna gain is -4 dBi or less. *MSV ATC Decision* at ¶ 95(f). With respect to

---

would help to facilitate more flexible use of the spectrum"); Federal Government Spectrum Task Force, *Spectrum Policy for the 21st Century – The President's Spectrum Policy Initiative: Report 1* at 17 (June 2004) ("[C]onsideration of whether incumbents have an obligation to deploy more robust equipment as they replace existing equipment may be appropriate.").

the degree of antenna discrimination that is required in order for MSV and Inmarsat to share frequencies, MSV notes that it shares very little spectrum with Inmarsat. Despite this, the Commission in the *ATC Order* imposed a reuse limitation on all of MSV's frequencies, regardless of whether they are shared with Inmarsat, based on the assumption that there would be only 25 dB of antenna discrimination relative to Inmarsat satellites. To the extent that Inmarsat wants to revise the Commission's uplink interference analysis to account for the degree of antenna discrimination between MSV and Inmarsat on a beam-by-beam basis, then the Commission should also increase the amount of reuse permitted to MSV on those beams where there is greater than 25 dB of antenna discrimination and permit unlimited reuse on non-co-channel frequencies.[40]

[40] It bears noting that Inmarsat incorrectly states in its Application that it has "now satisfied the final requirements of the ORBIT Act," which was intended to reduce its ownership by government-owned, foreign monopolies and to require enhanced public disclosure. Contrary to Inmarsat's assertions, Inmarsat is still owned in large part by these same entities and has yet to satisfy the requirements of the ORBIT Act. *See* Inmarsat Ventures Limited, Petition for Declaratory Ruling, IB Docket No. 04-469 (November 15, 2004). While Inmarsat has certified that it has satisfied its ORBIT Act obligations, it has failed to disclose material information regarding its ownership necessary for the Commission to verify this certification. Moreover, former signatories still exercise control over Inmarsat, in express violation of the terms of the ORBIT Act.

Conclusion

For the reasons stated above, MSV requests that the Commission affirm the Bureau's decision. The waivers provided by the Bureau were limited and conservative, and MSV looks forward to the Commission providing additional flexibility on reconsideration.

Respectfully submitted,

Bruce D. Jacobs
David S. Konczal
SHAW PITTMAN LLP
2300 N Street, N.W.
Washington, D.C. 20037
(202) 663-8000

Randy Segal
Senior Vice President
Lon C. Levin
Vice President
MOBILE SATELLITE VENTURES SUBSIDIARY LLC
10802 Park Ridge Boulevard
Reston, Virginia 20191
(703) 390-2700

December 23, 2004

Technical Appendix

I. Impact of Increased Base Station EIRP on Potential Interference to Inmarsat Terminals

Inmarsat challenges the Bureau's decision to permit MSV to increase its base station power and reduce overhead gain suppression.[1] Inmarsat claims that the Bureau should have modeled potential interference using free space propagation and that the combination of increased base station power and reduced overhead gain suppression will adversely affect aeronautical service. Each of those claims is refuted below. In addition, Annex A provides a discussion of modest remedial actions available to Inmarsat if it is truly concerned about significantly increasing the resilience of its receivers.

A. It is appropriate to use a non free-space propagation model for predicting interference potential to land transportable terminals

In populous areas where ATC base stations may be deployed free-space propagation is not an appropriate model to use to predict overload interference. The presence of clutter results in propagation anomalies that induce additional losses in signal strength compared to free-space propagation. In areas where there is significant clutter between a base station and an operating terminal, with no line-of-sight between the base station and the terminal, the Walfisch-Ikegami non-Line-of-Sight (W-I NLOS) model is most appropriate. In areas where there is clutter but a line-of-sight path may exist between a base station and an operating terminal the Walfisch-Ikegami Line-of-Sight (W-I LOS) propagation model is most appropriate. The Commission appropriately used the W-I LOS propagation model in the ATC Order to estimate overload interference potential to Inmarsat terminals. Inmarsat also acknowledges that in urban areas there is significant blockage. Inmarsat states: "Furthermore, particularly in urban environments, there is a high probability that MTs used outdoors are fully or partially blocked from the ATC base station."[2] Thus, by Inmarsat's own admission, the Commission has acted appropriately in assuming other than free-space propagation in evaluating overload interference potential to Inmarsat terminals from ATC base stations.

---

[1] Inmarsat Ventures Limited, Application for Review, File No. SAT-MOD-20031118-00333, File No. SAT-AMD-20031118-00332, File No. SES-MOD-20031118-01879 (December 8, 2004) ("*Inmarsat AFR*"), at 22-24 and Technical Annex at 1-9.

[2] *See Inmarsat AFR*, Technical Annex at 10.

B. The combined effect of relaxed overhead gain suppression and 8 dB higher EIRP per sector does not cause harmful interference to Inmarsat's AMS(R)S Receivers

In its ATC application (Appendix L) MSV showed that the relaxed overhead gain suppression of its ATC base station antenna pattern does not cause harmful interference to aeronautical terminals. In addition to that showing, MSV presented simulation results[3] (*ex parte* February 4, 2004) showing that the combined effect of relaxed overhead gain suppression combined with higher EIRP per base station sector does not cause harmful interference to aeronautical receivers. NTIA agreed with MSV and suggested that even 12 dB higher EIRP per sector (relative to the level of 23.9 dBW authorized by the Commission in the ATC Order) would be appropriate and would not cause harmful interference to AMS(R)S receivers.

Inmarsat's analysis of considering the impact of only one base station and attempting to show that only one base station operating at 8 dB more EIRP can overload an AMS(R)S receiver is simply wrong (Inmarsat Figures 1, 2, 3). With one ATC base station emitting 32 dBW EIRP per sector <u>and</u> using the relaxed base station antenna characteristic, an airborne AMS(R)S receiver can be as low as 65 meters above ground (only 35 meters above the base station) and still maintain positive margin against overload. As the horizontal distance between the AMS(R)S receiver and the base station tower increases, the available margin increases rapidly as shown in the Table below.[4] Comparing these results with Inmarsat's Figure 2, which, consistent with NTIA, the Commission's analysis, MSV's analysis, and the ARINC specifications, is based on an overload threshold of -50 dBm, the inescapable conclusion is that Inmarsat's analysis is wrong. Inmarsat's Figure 2 shows overload at about 158 meters altitude when the AMS(R)S receiver is at the base station zenith and again overload at 158 meters altitude at a horizontal distance of 1800 meters from the base station tower. Contrary to Inmarsat's conclusions, at an altitude of 158 meters we find that an AMS(R)S platform maintains a healthy margin against overload (greater than 6 dB) for any horizontal distance from an ATC base station tower. It is difficult to further respond to Inmarsat's analysis for Inmarsat stays silent on its methodology and assumptions. Not withstanding

---

[3] *See* MSV *ex parte* letter, File No. SAT-MOD-20031118-00333, File No. SAT-AMD-20031118-00332, File No. SES-MOD-20031118-01879 (February 4, 2004).

[4] The height of the base station tower is at 30 meters. "X" and "Y" indicate the coordinates of the AMS(R)S trajectory (in km) and the base station is located at (X, Y = 0, 0). Other parameters used in the analysis are: (a) 4 dB interference reduction due to voice activity, (b) 5.2 dB interference reduction due to power control. These parameter values are consistent with those used by the Commission in the ATC Order (see ATC Order appendix C2, Table 2.2.3.2.A at 222). In addition, the AMS(R)S terminal antenna gain in the direction of the base station is set to 0 dBi, the base station down-tilt angle is 5°, shielding due to the aircraft body is set to 0 dB, and polarization discrimination is set to 0 dB. Lastly, free-space propagation is assumed.

the above, it should also be emphasized that critical air-to-ground communications during take-offs and landings rarely, if ever, are based on the use of Inmarsat's system.

AMS(R)S Receiver Trajectory over one ATC Base Station Emitting 32 dBW EIRP per Sector and using the Relaxed Overhead Gain Suppression Pattern (AMS(R)S Receiver at 65 Meters Altitude; Base Station Located at X, Y = 0, 0 km)

X	-4	-3.4	-2.8	-2.2	-1.5	-0.9	-0.3	0.3	0.9	1.5	2.2	2.8	3.4	4.0
Y	-4	-3.4	-2.8	-2.2	-1.5	-0.9	-0.3	0.3	0.9	1.5	2.2	2.8	3.4	4.0
Over. Level (dBm)	-50	-50	-50	-50	-50	-50	-50	-50	-50	-50	-50	-50	-50	-50
Agg. Rec. Sig. (dBm)	-68.5	-67.2	-65.7	-63.9	-61.6	-58.7	-56.9	-56.9	-58.7	-61.6	-63.9	-65.7	-67.2	-68.5
Margin (dB)	18.51	17.22	15.71	13.89	11.63	8.73	6.87	6.87	8.73	11.63	13.89	15.71	17.22	18.51

C. Remedial actions available to Inmarsat

As discussed above, today's satellite terminals, by their nature, have minimal usage in populous areas. As such, the probability of overload interference from ATC base station emissions is inherently small and is furthermore limited to areas that are very close to ATC base stations (200 meters or less).[5] If, however, Inmarsat is concerned about overload interference to its land-transportable equipment that may occasionally operate from a populous area, Inmarsat can begin to adopt design practices that will make its land-transportable equipment as robust as cellular/PCS equipment is. Cellular/PCS terminals constantly operate in hostile urban environments where overload interference is a constant threat owing to competitors' emissions. Cellular/PCS terminals, however, rarely if ever suffer overload interference because appropriate front-end receiver designs have been adopted that prevent overload interference. ATC will not be widely deployed for at least two more years. Inmarsat, therefore, has an opportunity, if it so desires, to begin adopting responsible design practices in its terminal equipment to safeguard against even the remote possibility of overload interference. A number of proven technical solutions are available to Inmarsat some of which are further discussed below in Annex A. These solutions are currently in use by many millions of terrestrial cellular and PCS terminals world-wide. Inmarsat may use any combination or all of the following to reduce or eliminate overload interference to its land-transportable terminals.

(a) Incorporate more robust front-end receiver designs/down-conversion chains into its terminal equipment, as discussed further in Annex A.

(b) Make use of existing power control capability. The Inmarsat GAN family of terminals (as well as all other modern Inmarsat equipment such as R-BGAN, BGAN, Mini-M, and M terminals) is already designed with power control capability. As such, a terminal that is operating in an interference environment is equipped to request additional power from a satellite/gateway in order to overcome the local interference that it may be

[5] Assuming ATC base stations with service radii of 1 km, and a potential overload interference radius of 200 m around each base station, the potential overload area relative to the service area of the ATC is 100 x $(200/1000)^2$ = 4%. The percentage of the overall U.S. landmass that is within the potential overload interference radius is, of course, much smaller.

experiencing. This is primarily the reason (overcoming local interference) for equipping satellite and terrestrial terminals with power control capability, and the reason that has compelled Inmarsat to do so already for most of its modern terminal equipment. With power control, more power is offered to the terminals that need it while reducing the power delivered to terminals that do not need it. Given that overload interference is such a remote possibility, the number of Inmarsat terminals that may need additional power to overcome overload interference at any given time would be insignificant and the additional power that may have to be expended by an Inmarsat satellite for such a purpose would also be insignificant.

(c) Incorporate agile front-end filtering in its terminal equipment. In response to a terminal's geographic operating location a front-end filter may be switched-in to offer additional rejection against possible near-by strong signals. A front-end filter can deliver 20 dB or more of out-of-band rejection while maintaining very low insertion loss (of the order of 1 dB or less) over the pass-band. Inmarsat may incorporate such a filter into its terminal equipment to prevent overload interference, at least over a subset of its Region 2 frequencies, in the unlikely event that a terminal is operating in a populous area and proximate to an ATC base station. A strong facilitator to effective front-end filtering is spectrum contiguity. Increasing spectrum contiguity (for Inmarsat <u>and</u> MSV) will benefit both organizations in being more spectrally efficient, particularly in light of the evolution of both to broad-band services, will serve to further reduce interference potential, and will facilitate effective front-end filtering options for Inmarsat in the designs of its satellite-only terminals. Over the past year, MSV has repeatedly engaged Inmarsat in spectrum aggregation/contiguity discussions and has submitted numerous proposals to Inmarsat toward that end. To date Inmarsat has not submitted a single counter proposal, has remained inflexible toward MSV's proposals, and has dismissed them all as unacceptable.

(d) Incorporate its own ATC mode into its terminals. If Inmarsat incorporates ATC capability into its terminal equipment, Inmarsat will benefit from being able to provide uninterrupted service in populous areas while eliminating the possibility of overload interference as small as it may be.

II. Impact of Bureau Order on Potential Interference to Inmarsat Satellites

Inmarsat challenges the Bureau's decision to accept MSV's showing of compliance with Section 25.253(a)(8), that L-band ATC systems reserve a minimum of 18 dB of link margin for structural attenuation between base stations and mobile terminals when the terminals are operated inside buildings. *See Inmarsat AFR* at 17-22 and Technical Annex at 9-12.

In criticizing the Bureau's decision that MSV has complied with the requirements for allocating 18 dB of link margin to structural attenuation, Inmarsat continues to display a significant lack of understanding of how terrestrial cellular/PCS systems work. Inmarsat presents cartoons of urban environments, illustrating blockage between a terminal and a base station, and states "Furthermore, particularly in urban environments,

there is a high probability that MTs used outdoors are fully or partially blocked from the ATC base station. It should be noted that also indoor MTs and MTs operated in cars may be subject to additional blockage towards the base station."[6] On this assertion, MSV completely agrees with Inmarsat. However, Inmarsat apparently fails to understand the implications of its assertion as relating to uplink and downlink interference.

Relative to downlink interference, as discussed above, the intrinsic nature of urban morphology offers substantial protection (as pointed out by Inmarsat, there will likely be significant blockage between a terminal and an ATC base station). Relative to uplink interference, what Inmarsat fails to understand is that the blockage/shadowing effects of urban environments are accommodated by the link budget of a base station. As previously stated by MSV in its ATC Application (Appendix E) "In accordance with established design methodologies, the link budget of a base station and corresponding terminal equipment is developed and balanced bi-directionally, by taking into account all relevant parameters (*i.e.*, the maximum EIRP of the base station and terminal equipment, the propagation exponent factor appropriate for the environment, multipath fading allowances, receiver sensitivities, receiver antenna gain, receiver diversity gain, etc.) including the signal loss allocated to structural attenuation."[7] Furthermore on August 31, 2004, at the request of Commission staff, MSV filed link budgets for its proposed L-band ATC clearly showing margin allocated to lognormal fading (GSM link budget) and margin allocated to shadowing (cdma2000 link budget).[8] Thus, margin is allocated to accommodate the impact of shadowing and/or blockage. Inmarsat fails to understand that the signal attenuation due to shadowing/blockage of the base station by a building and/or other structure will not force an ATC terminal that is operating outdoors to radiate, on average, more than 20 dB less of maximum power.

At the edge of coverage of an ATC area, MSV has stated that it will not activate the transmit function of sectors facing away from the ATC service area. This will prevent ATC terminals from continuing to drift away from the ATC service area while continuing to be served (see MSV's ATC Application, Appendix E).

---

[6] *See Inmarsat AFR*, Technical Annex at 10.

[7] *See* MSV's ATC Application, Appendix E.

[8] *See* MSV *ex parte* letter, IB Docket No. 01-185, File No. SAT-MOD-20031118-00333, File No. SAT-AMD-20031118-00332, File No. SES-MOD-20031118-01879 (August 31, 2004).

ANNEX A

Terminal Design Considerations for Adjacent-Band Overload Rejection

A satellite terminal that is based on super-heterodyne receiver principles will generally display an overload threshold that depends on the frequency separation between the desired signal frequency and the interference carrier frequency. The overload threshold will generally display this dependency over a frequency separation range that is significantly larger than the bandwidth of the desired signal *when the 2nd amplifier and mixer of the receiver chain are controlling factors in determining the overload threshold.* Key receiver characteristics determining the above dependence are:

- the gain of the 2nd amplifier stage relative to the gains of other stages
- the overload characteristics of the 2nd amplifier stage
- the overload characteristic of the 2nd mixer stage
- the frequency roll-off characteristics of the 1st IF filter.

It is possible to design super-heterodyne receivers that minimize the frequency offset, from the desired signal carrier, at which the adjacent-band interference/overload susceptibility threshold begins to degrade.

Modern receivers using direct frequency conversion can realize much better close-in adjacent-band interference/overload susceptibility threshold performance than super-heterodyne designs as the LNA is the controlling element in such receivers.[1] Certain Inmarsat terminal receivers may show adjacent-band interference/overload susceptibility thresholds that are dependent on the frequency offset between the desired carrier frequency and the interference carrier frequency. We first explore why this is occurring by analyzing the architecture and frequency plan of a generic super-heterodyne receiver. Figure 1 illustrates the architecture. Figure 2 shows a typical frequency plan as well as signal spectra at key points in the receiver.

---

[1] Direct conversion receivers may also show onset of performance degradation at a frequency offset somewhat greater than half the desired carrier bandwidth. This is because, in some direct conversion receivers, the desired signal is digitized with a higher bandwidth than the carrier bandwidth, the final frequency selectivity being provided digitally. However, the excess bandwidth referred to above is usually much less than the typical bandwidth of the 1st IF filter in a super-heterodyne receiver.

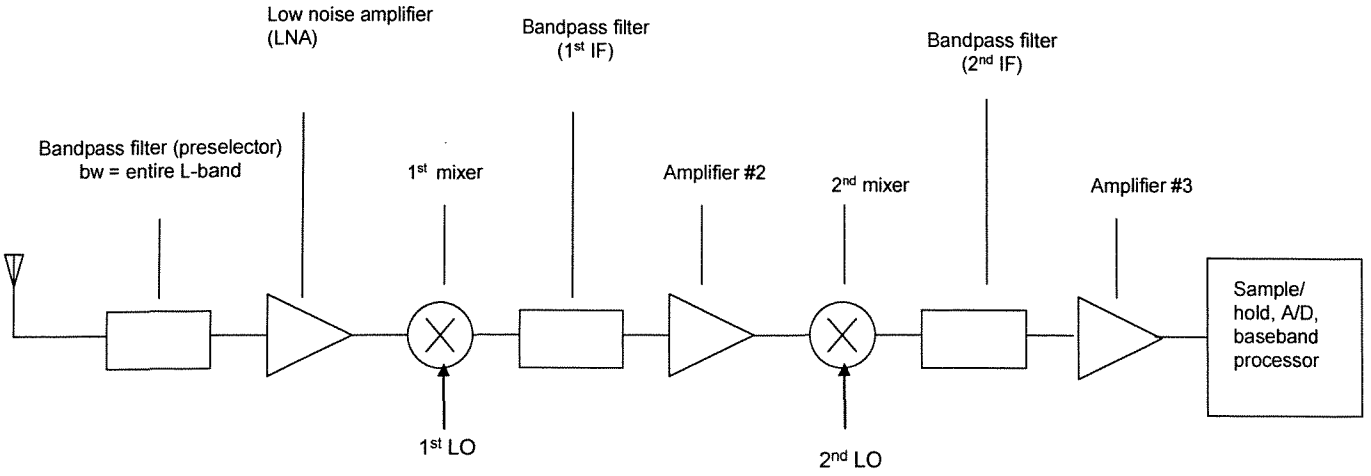

Figure 1 Typical 2-stage superheterodyne receiver architecture

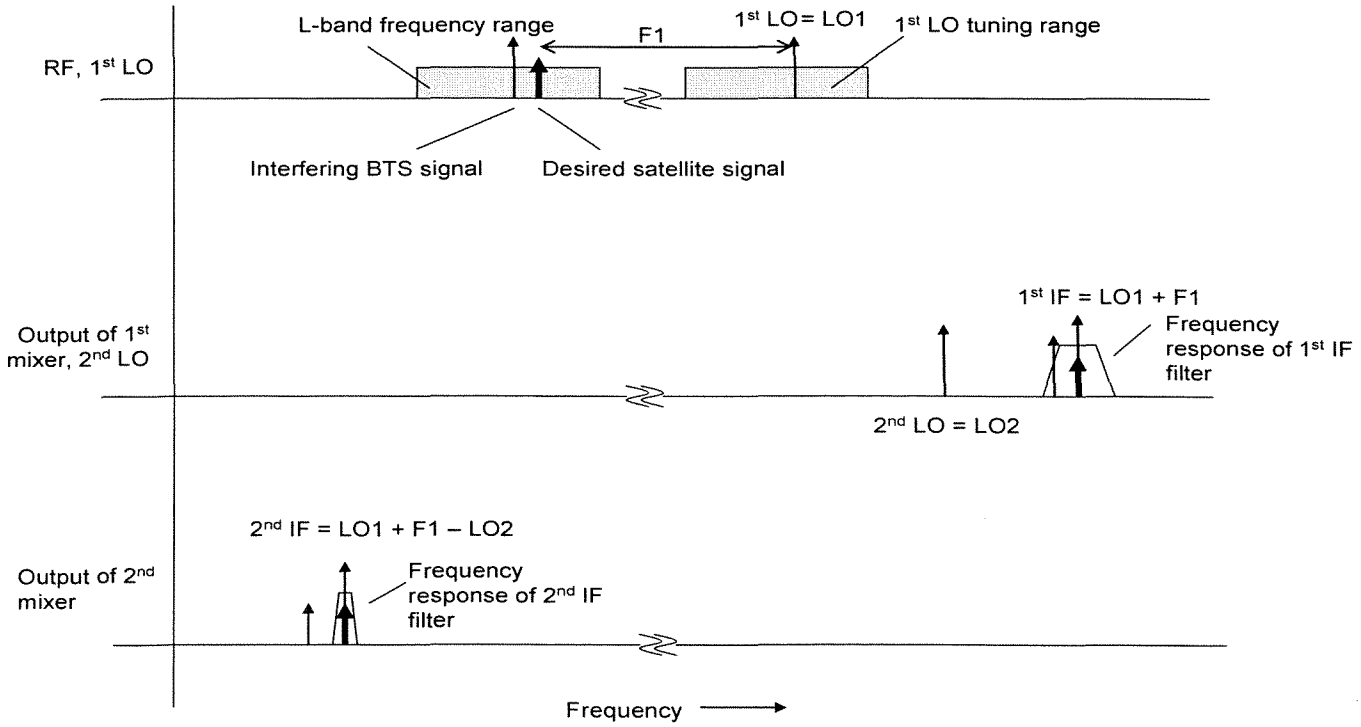

Figure 2 Signal spectra at different points in 2-stage superheterodyne receiver

The following aspects of super-heterodyne receiver design practices are noteworthy. In a 2-stage super-heterodyne receiver, the bandwidth of the 1st IF filter usually exceeds the minimum required to pass the desired carrier signal. This is because the 1st IF is usually at a relatively high frequency (significantly higher than the L-band RF) making it impractical to realize the circuit Q that would be necessary to "band-pass filter" only the desired carrier signal. Thus it is very likely that the output of the 1st IF (see Figure 1) will contain the close-in interfering signal, as shown in Figure 2 (second trace). The presence of the interfering signal at the input to the second mixing stage has the potential for the following deleterious effects:

- the 2nd mixer could overload,
- the 2nd amplifier could overload,
- if AGC is derived from the output of the 1st mixing stage (to protect the 2nd amplifier and mixer overload), then this will reduce the input level for the desired signal for the rest of the receive chain, including the input to the A/D, thereby reducing the signal-to-quantization noise ratio.

Overload of the 2nd amplifier/mixer stage becomes a critical concern in a 2-stage super-heterodyne receiver if most of the gain of the receive chain is realized from the 2nd stage amplifier. It is noteworthy that, if the bulk of the gain were shifted to the 3rd stage amplifier, following the 2nd IF filter, the potential for overload by adjacent channel signals leaking in through the 1st IF filter would be less.[2] It is also noteworthy that the effects of 2nd amplifier overload and AGC derived from the output of the 2nd amplifier are similar – they both lead to a reduction in the amplitude of the desired signal at the input to the A/D.

[2] This is because the 2nd IF filter can be much more frequency selective as it is at a much lower frequency than the 1st IF. Typical values of 2nd IF are approximately 450 kHz, 10 MHz and 70 MHz.

Exhibit B

Trade Press Reviews of BGAN Service

Inmarsat BGAN satellite terminal

An internet connection that works almost anywhere - for those that can tolerate high prices and slow data rates

Manufacturer: Inmarsat

Martin Courtney, IT Week 25 Feb 2004

ADVERTISEMENT

With an increasingly mobile workforce, the need for roaming staff to stay connected to the internet, email and other office systems from wherever they happen to be is more important than ever.

Inmarsat's regional BGAN system is a portable satellite modem that provides ubiquitous connectivity from virtually any location with a clear view of the sky, but low bandwidth and slow connections demand a degree of patience when using it.

Cost is also an issue, with the BGAN modem reviewed here priced at around £1,000 + VAT, and service provider bandwidth charges are as high as £10 to £15 per megabyte transmitted.

The ruggedised modem is roughly the size of a standard A4 format notebook PC, but a couple of inches thicker and a lot lighter. Alongside the two rubber power-on and mode-select buttons on the front, there is a row of LEDs that indicate whether the device is being used on battery or mains power, and whether the link to the host PC is using Bluetooth, Ethernet or USB connectivity.

The requisite SIM card is about the same size as those used in mobile phones, and inhabits a small pull-out compartment on one side, next to the removable battery.

Once the drivers and connection software are installed from the single CD, the program brings up an internet connection wizard that runs the user through configuration. In our lab tests, the software eventually recognised the USB cable and automatically opened the pointing screen that helps to position the modem for optimum signal strength.

Siting is crucial to getting an initial network connection - the device must be placed on a flat surface with a clear view of the sky before connection to Inmarsat's geostationary satellites is assured. The sign on the side "Caution: RF Radiation Keep Away One Metre" gives a little cause for concern, although the USB, Ethernet and power cables supplied are conveniently long to help put the modem in a safe position relative to the user.

The software indicates the precise direction that the device's hinged lid should be pointed, as well as the correct angle, using beeps to direct the user to the best configuration. We tested the modem at various locations within the UK and found that it always needed to be pointed to the south east and it needed an angle between 17 to 18 degrees to get the best signal.

We were able to get a connection from behind window panes, but the satellite signal was always stronger when the modem was placed outdoors. The strength of the signal can fluctuate, meaning users might have a connection at one moment, and

nothing the next, which sometimes prevented us from getting a connection at all, or broke off the one we had achieved.

Although we were unable to measure bandwidth precisely, the experience when browsing the web is very similar to using a dial-up modem, indicating approximately 42kbit/s downstream in most instances.

Satellite systems have long been called the Hobson's Choice of fixed data connections, a last resort that saves the day when there is no other type of access technology available. Considering this performance it is not difficult to see why.

The regional BGAN is better suited to truly mobile users who work outside in very remote areas where broadband options are non-existent, GSM and GPRS coverage is patchy or unavailable, and even dial-up analogue lines are hard to find.

Price: £1,000 + VAT

Contact: Inmarsat 020 7728 1000

Verdict

Inmarsat's BGAN satellite terminal is a ruggedised device suited for outdoor use, where the signal is likely to be stronger. The modem is lightweight, easy to set up and provides users with almost total coverage. But high transmission costs and limited bandwidth may deter buyers who have the option of an alternative means of connectivity.

Pros: Wide coverage; portability; suitable for outdoor use

Cons: Low bandwidth; slow connection speeds; expensive

PERSONAL COMPUTER WORLD

Hands on - Mobile computing - The middle of nowhere but still connected.

Guy Kewney.
1,824 words
1 November 2004
Personal Computer World
207
English
(c) 2004 VNU Business Publications Ltd.

You're miles from anywhere and need to get connected. We investigate one option.

Here's the situation: you're out of reach of the Internet. Your cellphone doesn't work. There is no local phone network, either wired or wireless. The nearest Internet cafe is some 50 miles away. And you simply have to get connected.

Until recently, I'd have said the best you can hope for is a hugely expensive satellite dish, too big to fit on a truck, and only giving you basic text transmission.

That, though, was before I discovered Regional Broadband Global Area Network (**BGAN**) at a trade show earlier this year, an option that is supposed to cover just this sort of situation.

So, when all else fails, does this technology work? It just happened that I was in exactly the situation I've described above: miles from anywhere, no mobile coverage, and no broadband, or even dial-up access - in the remote hills of southern Spain. The good news is: if you are reading this, it worked - in the end. And at the end of the test, the only real complaint I have is price. But the story of how I got there is probably worth telling in some detail.

Setting up

The **BGAN** box is about the size and shape of a small notebook PC. There's no screen, which is where the fun begins. The instructions tell you to use your PC to set the device up. It seems straightforward enough to start with; you plug the SIM card into the **BGAN** box as instructed (see screenshot 1) and power up. You then select whether you're going to talk to the **BGAN** over Ethernet, USB or Bluetooth. This is an easy process as there is a light next to each option and you simply press 'Select' until the light comes on for the link you want (see screenshot 2).

The start-up software configures this and other settings, such as the IP address, automatically.

The problem starts when you realise that this is a satellite dish. Well, it's not exactly a dish; it's a receiver/transmitter with its own abilities to focus a signal pretty accurately - and the result is that you do have to point it pretty accurately at the satellite. You obviously can't see the satellite - in its geostationary orbit it's far too far away even at night - so here's what you do.

Inmarsat, which operates the satellites to which this service links, came up with a pretty simple dual-process system. Built into the transceiver is a GPS receiver. When you switch it on, it works out where on the planet it is and, from that, what angle it needs to be set at to the Equator, and what elevation angle. It passes that

information on to the PC. And the PC displays it on screen (see screenshots 3 and 4).

This is where it starts to get rather complicated. In order to get a GPS position lock, you have to be out in the open. That means no trees, no roofs, no tall buildings, no steep hills. The middle of a field, in fact. Have you ever taken a notebook PC into the middle of a field? Trust me; nothing on the screen is visible. In fact, it's barely possible to tell whether the PC is switched on or not.

Out in the field

Picture the middle of a green field on a fairly bright English day, windy, but with occasional showers. Your mobile wizard (me) has his battery-powered PC and his battery-powered **BGAN** unit on the grass, and the display appears to be a blank screen: a piece of greyish black plastic. Any luminous TFT pixels are utterly lost in the sunshine. So your reporter has taken along a black umbrella, under which is the PC.

But the wind is quite strong, and the umbrella tends to blow around; so the umbrella has the shoulder-bag in which the equipment was carried, perched precariously on top. And the umbrella is pretty small, so your correspondent is sitting with his knees above his ears, his head poked under the umbrella, and one hand on the PC keyboard, while the other reaches out to adjust the **BGAN** unit.

The next problem is the compass. The **BGAN** unit has one, and it's more or less able to point north. But it's not accurate enough to prevent quite gross errors. And if you don't have the thing pointed more or less right (within 10 deg or so) at the satellite, you can use the 'pointing' menu 'til the cows come home, without getting a signal.

I managed it in the relatively dim light of a slightly overcast UK afternoon. The crunch came in the 104 degF heat of a Spanish day. The only place I could be sure of being out of reach of overhanging trees was the flat roof of the house we were staying in - baking hot concrete. The same impossible viewing conditions applied, so I had a black jacket over my head and over the PC screen. I rapidly became overheated, pointed the wretched thing south-west instead of south-east, and couldn't get a signal at all.

Here's where the next problem arises. If you can't get a signal, you can't reach Inmarsat tech support to ask what to do.

The manual tells you what to do: call tech support on the following phone number. Very clever! If I had a phone that worked, why would I be using an expensive satellite service? And this was Saturday, and tech support is only open on weekdays. So I found myself unable to test it out until Monday, when I could drive into the local town and phone Inmarsat for advice.

Once we'd resolved my own incompetence in finding east, the modem worked flawlessly. I tested connectivity speed, and found that we were getting pretty reliable downloads of over 100Kbits/sec, and signal quality was always good enough to use the service (see screenshot 5).

The only flaw in the service was that it wasn't 'always on' - I kept getting error code 101 and the service kept going down (see screenshot 6). I was testing the system by running an IRC session, connecting to my London server. It was rare indeed that I was able to stay in contact for more than half an hour without being kicked off by Inmarsat. Neither Inmarsat nor I know what causes this. We also had frequent periods when it seemed that Inmarsat's DNS was inoperative.

However, the system did work. The end-to-end latency in a two-way satellite link is not good: very roughly, you could build four seconds into any transaction. But the flow of data was quick - better than ISDN - and quite noticeably better than GPRS. Using FTP over GPRS is a lottery: over **BGAN** it worked flawlessly.

As the acid test, I set up a Skype voice link to a friend in Cornwall. Voice quality was excellent. Conversation was a little disjointed because of the four-second round trip, but after a few misunderstandings, we evolved a protocol of waiting like a BBC presenter for a remote reporter to catch up with the present, rather than jumping in right away.

There are, however, two big reservations about using **BGAN**: price, and service. The cost of the data is

prohibitive for all but strict emergency use: around EUR10 per megabyte. This makes it essential to revert to the Internet of the 1990s: turn off all graphics, disable Flash, disable your standard email client, and work on a strict 'headers only' basis, preferably with a webmail server, and make absolutely sure you've done a full sweep for viruses and spyware.

Around EUR500 of credit should give you 50MB, which is roughly the equivalent of 20-30 good-quality photographs. However, beware if you run out of credit as you won't be able to contact Inmarsat.

Service

Normally, you would buy (or rent) your **BGAN** unit from one of Inmarsat's distributors. They would set up all the normal Internet services: mail, routing, and any other services you need. From all accounts, these people are professionals, and you can take the list of resellers from Inmarsat with confidence. However, I had some reservations with the service I tried, which was provided directly by Inmarsat.

First, it blocks several ports. It took me about four days to work out that I simply was not going to be able to reach my mailbox: the SMTP link was blocked except for Inmarsat's own mail server. This could be a problem for people with their own domains.

It also has this absurd system of not allowing you to contact Inmarsat itself with queries over billing. This is really sawing off the branch you're sitting on, and if other **BGAN** providers are forced to follow this pattern, it's insane.

On the other hand, where I was, there literally wasn't any alternative and, without Inmarsat, I'd have been utterly cut off from the Internet. Of course, there are times when that's a good idea ...

Is it worth it?

So, all in all, how does **BGAN** stack up? The price is just one of those things. If you need the service, you pay the price. The cost of the **BGAN** unit itself is around £1,500; data is around £6 per megabyte.

The **BGAN** unit is lightweight, and its batteries will keep it working roughly the same amount of time as the batteries in your PC notebook will function. Aiming it at the satellite was quick and easy - once the sequence was worked out. However, the design urgently needs to be updated so it can be aimed in broad daylight using an ordinary monochrome LCD signal indicator on the unit, rather than needing the PC to be correctly connected.

The unit does generate a powerful signal to transmit to the satellite, and the manual warns against getting into the beam, but doesn't tell you how much power, or on what frequency it is being transmitted. Inmarsat says the warning was printed after tests, which suggested the warning was needed. I didn't perform any personal tests, but did walk in front of the antenna a few times, by accident, without noticing any effects - so caution, rather than alarm, is called for.

CONTACTS

Guy Kewney welcomes your comments on the Mobile computing column. Email him at: mobilecomputing@pcw.co.uk. Please do not send unsolicited file attachments.

Guy Kewney has been reporting on all aspects of IT since long before the first personal computers arrived on the scene. He now believes the wireless revolution will change the world.

Document PCWLD00020040914e0b10002y

Return to Headlines

Copyright 2004 Total Telecom
All Rights Reserved
Total Telecom Magazine

August 4, 2004 Wednesday

LENGTH: 922 words

HEADLINE: Regional Satellite: A new beginning for BGAN

BODY:

When Inmarsat launched its regional broadband global area network (BGAN) mobile data service in November 2002, it aimed to take satellite services into previously untapped enterprise markets.

But with only about 4,000 active terminals currently on the IP-based system, it is clear that regional BGAN distributors and service providers are finding it difficult to sell the services outside the traditional satellite customer base: maritime, government, military, aid agencies and media companies working in remote areas where communications infrastructure is limited or doesn't exist.

"It's been tougher to get into new markets than we thought it would be," says Lisa Wagner, head of business development at Inmarsat. "It's difficult to educate a market that knows nothing about satellites."

Inmarsat's land data service revenues in the first quarter of 2004 were $27 million, making up 23.2% of the company's total revenues. Regional BGAN revenues are a proportion of these figures, although the company does not break out or report such numbers separately.

Global mobile satellite data services are much too expensive for typical enterprise users, says Brownlee Thomas, principal analyst, global telecoms services, at Forrester Research. But if regional BGAN is the only game in town, users don't have a choice, she says.

"Enterprises also want something that is not as big as the BGAN terminal; something that looks more like a handheld or mobile phone," adds Thomas.

The IP modem terminals, which are about the size of a laptop computer, retail for $1,200-$1,500. Service charges are volume-based, ranging from $12-$14 per megabyte, compared with $10-$11 per MB typically for GPRS roaming.

BGAN is positioned to complement wireless services such as GPRS, 3G and VSAT, where there is little or no infrastructure. Distributors are also targeting corporates with customised IP VPN solutions, particularly companies that need LAN connectivity to branch offices in countries where the infrastructure is poor. Inmarsat says about 35%-40% of regional BGAN users are using VPNs.

BGAN is indispensable for certain situations, such as in an emergency, when the communication need is immediate, as well as for network backup, says Gregory Francis, director of consultancy Access Partnership. "You can't beat it for convenience," he says, because data services are available instantly wherever you are.

While the optimum BGAN data rate is 144 kilobits per second over a shared channel, in Iraq - currently regional BGAN's busiest area - users are averaging 90 kbps, according to Inmarsat's Wagner. Credit card issuer Visa is using the

service to set up a banking infrastructure there; terminals are being used as hubs for Internet cafes; and the media are using the service for sending emails and Internet access.

In Afghanistan, NATO will use regional BGAN for data communications for troops providing security for the presidential elections in October.

But analysts say BGAN is difficult to sell as a long-term solution for heavy-data corporate users. If they need to send large amounts of data, it is more economical to use fixed broadband VSAT services, which consist of leased, all-you-can-eat capacity links.

"We're cheaper than VSATs (only) if you're sending less than 4 Mbytes per day," says Wagner at Inmarsat.

"If it's long term, then VSAT per bit will always be cheaper, but then you lose the mobility," says Arvid Johannessen, director of new Inmarsat services and product development at Telenor Satellite Services, a BGAN distributor and interconnect partner.

However, BGAN distributors are making some progress in new vertical markets such as banking, retail and tourism, by developing services including performance monitoring tools, firewalls, security and LAN connectivity for enterprise extranets and IP VPNs. Distributors like Telenor and France Telecom are also signing up new channel partners.

"There are financial customers that didn't even know about us a year ago," says Arnaud Mahy, land mobile marketing director at distributor France Telecom Mobile Satellite Communications.

France Telecom offers a cost control tool for distributors and end users. Through a web-based portal, users can set usage parameters such as limiting HTML traffic or only allowing email traffic.

One unlikely new BGAN user is pop singer Robbie Williams. The singer's tour manager needed to use an enterprise collaboration application called workTeams, from Scottish company Yakara, to coordinate all the logistics of the 2003 European summer tour. The only consistent, mobile data network across the 10 countries toured was the regional BGAN service.

Another atypical satellite user is Prada. The fashion design company had a photo shoot on an island off the coast of Italy, using digital cameras. With regional BGAN, it was able to send the photos directly to the head office in New York to produce brochures to a tight deadline.

These are the kinds of applications and new vertical markets that BGAN distributors and service providers hope to capture more of.

At the end of 2005, Inmarsat will launch an upgraded, global version of BGAN. The service will include voice and have higher maximum data rates of 432 kbps. Inmarsat plans to establish roaming agreements with 3G operators, which it believes will open the service to new users.

There will be four different sizes of terminal according to the bandwidth speeds needed. The smallest will be targeted at corporate "nomads" and will be priced as close to $1,000 as possible, according to Inmarsat's Wagner.

LOAD-DATE: October 25, 2004

CERTIFICATION

I, Dr. Peter D. Karabinis, Vice President & Chief Technical Officer of Mobile Satellite Ventures Subsidiary LLC ("MSV"), certify under penalty of perjury that:

I am the technically qualified person with overall responsibility for preparation of the information contained in the foregoing Opposition. I am familiar with the requirements of the Commission's rules, and the information contained in the Opposition is true and correct.

Executed on December 23, 2004

/s/Dr. Peter D. Karabinis
Dr. Peter D. Karabinis
Vice President & Chief Technical Officer

CERTIFICATE OF SERVICE

I, David S. Konczal, hereby certify that on this 23rd day of December 2004, served a true copy of the foregoing "Opposition" by electronic mail (*) or via first class United States mail, postage prepaid, upon the following:

Chairman Michael K. Powell*
Federal Communications Commission
445 12th Street, S.W.
Washington, DC 20554

Commissioner Michael J. Copps*
Federal Communications Commission
445 12th Street, S.W.
Washington, DC 20554

Commissioner Jonathan S. Adelstein*
Federal Communications Commission
445 12th Street, S.W.
Washington, DC 20554

Sheryl J. Wilkerson*
Office of Chairman Powell
Federal Communications Commission
445 12th Street, S.W.
Washington, DC 20554

Paul Margie*
Office of Commissioner Copps
Federal Communications Commission
445 12th Street, S.W.
Washington, DC 20554

Barry Ohlson*
Office of Commissioner Adelstein
Federal Communications Commission
445 12th Street, S.W.
Washington, DC 20554

Thomas Tycz*
International Bureau
Federal Communications Commission
445 12th Street, S.W.
Washington, DC 20554

Commissioner Kathleen Q. Abernathy*
Federal Communications Commission
445 12th Street, S.W.
Washington, DC 20554

Commissioner Kevin J. Martin*
Federal Communications Commission
445 12th Street, S.W.
Washington, DC 20554

Bryan Tramont*
Office of Chairman Powell
Federal Communications Commission
445 12th Street, S.W.
Washington, DC 20554

Jennifer Manner*
Office of Commissioner Abernathy
Federal Communications Commission
445 12th Street, S.W.
Washington, DC 20554

Sam Feder*
Office of Commissioner Martin
Federal Communications Commission
445 12th Street, S.W.
Washington, DC 20554

Don Abelson*
International Bureau
Federal Communications Commission
445 12th Street, S.W.
Washington, DC 20554

Richard Engelman*
International Bureau
Federal Communications Commission
445 12th Street, S.W.
Washington, DC 20554

Roderick K. Porter*
International Bureau
Federal Communications Commission
445 12th Street, S.W.
Washington, DC 20554

David Strickland*
International Bureau
Federal Communications Commission
445 12th Street, S.W.
Washington, DC 20554

William Bell*
International Bureau
Federal Communications Commission
445 12th Street, S.W.
Washington, DC 20554

Howard Griboff*
International Bureau
Federal Communications Commission
445 12th Street, S.W.
Washington, DC 20554

Paul Locke*
International Bureau
Federal Communications Commission
445 12th Street, S.W.
Washington, DC 20554

Robert Nelson*
International Bureau
Federal Communications Commission
445 12th Street, S.W.
Washington, DC 20554

Cassandra Thomas*
International Bureau
Federal Communications Commission
445 12th Street, S.W.
Washington, DC 20554

Edmond Thomas*
Office of Engineering and Technology
Federal Communications Commission
445 12th Street, S.W.
Washington, DC 20554

Steven Spaeth*
International Bureau
Federal Communications Commission
445 12th Street, S.W.
Washington, DC 20554

James Ball*
International Bureau
Federal Communications Commission
445 12th Street, S.W.
Washington, DC 20554

Chip Fleming*
International Bureau
Federal Communications Commission
445 12th Street, S.W.
Washington, DC 20554

Karl Kensinger*
International Bureau
Federal Communications Commission
445 12th Street, S.W.
Washington, DC 20554

Kathyrn Medley*
International Bureau
Federal Communications Commission
445 12th Street, S.W.
Washington, DC 20554

Sean O'More*
International Bureau
Federal Communications Commission
445 12th Street, S.W.
Washington, DC 20554

John Muleta*
Wireless Bureau
Federal Communications Commission
445 12th Street, S.W.
Washington, DC 20554

Bruce Franca*
Office of Engineering and Technology
Federal Communications Commission
445 12th Street, S.W.
Washington, DC 20554

Alan Scrime*
Office of Engineering and Technology
Federal Communications Commission
445 12th Street, S.W.
Washington, DC 20554

Ira Keltz*
Office of Engineering and Technology
Federal Communications Commission
445 12th Street, S.W.
Washington, DC 20554

John P. Janka
Thomas A. Allen
Latham & Watkins LLP
555 11th Street, NW
Suite 1000
Washington, DC 20004

David S. Konczal