Qwest
607 14th Street NW, Suite 950
Washington, DC 20005
Phone: 202.429.3121
Fax: 202.293.0561

Cronan O'Connell
Vice President-Federal Regulatory

EX PARTE

Electronic Filing via ECFS

February 7, 2005

Marlene H. Dortch, Secretary
Federal Communications Commission
445 12th Street, SW
Room TW-A325
Washington, DC 20554

RE: In the Matter of Level 3 Petition for Forbearance from Assessment of Access Charges on Voice Embedded IP Communications, WC Docket No. 03-266

Dear Ms. Dortch:

On Thursday, February 3, 2005, Melissa Newman, Cronan O'Connell, and Robert McKenna, representing Qwest Communications International Inc. ("Qwest"), met with Jeffrey Carlisle, Tamara Preiss, Terri Natoli, Julie Veach, Jennifer McKee, Rob Tanner, and Jeremy Marcus of the Wireline Competition Bureau. The discussion focused on the Level 3 Forbearance Petition and the appropriate compensation for Voice over Internet Protocol ("VoIP") related calls. First, Qwest stated that true VoIP calls from a VoIP customer to a PSTN end user, where the ESP POP is located in the same local calling area ("LCA") as the terminating PSTN end user, enables the VoIP provider, under the current ESP exemption, to be treated as an end user and to purchase business lines (e.g., PRIs) to terminate the traffic to end users in the same LCA as the ESP POP. However, we clarified that the compensation for a PSTN-VoIP call, which is a telecommunications call, is based on the existing rules, i.e., access charges apply when a PSTN call is routed to an ESP POP which is not in the same LCA as the originating PSTN end user regardless of whether the PSTN end user actually used the "1+" dialing plan. These discussions were outlined using the attached *ex parte* presentation.

Sincerely,
/s/ Cronan O'Connell

Attachments

Copy to:
Jeffrey Carlisle
Tamara Preiss
Terri Natoli
Julie Veach
Jennifer McKee
Rob Tanner
Jeremy Marcus

Qwest®

Spirit of Service

Voice over Internet Protocol (VoIP)
Level 3 Petition
WC Docket 03-266

February 2005

VoIP Discussion: Level 3 Petition

- The Level 3 Petition should be denied
  - The existing ESP exemption, when properly applied, <u>already</u> protects ISP traffic from access charges
    - The ESP exemption permits an ESP POP located in the same local calling area as the called party to be treated as an end user
  - This Petition goes far beyond the legitimate bounds of the existing ESP exemption
- FCC action is necessary
  - Use the Level 3 petition to clarify the appropriate use of the current ESP exemption by denying the petition itself
  - Complete the IP-Enabled NPRM and declare true VoIP traffic to be an information service
  - Complete the Intercarrier Compensation docket

Qwest
Spirit of Service

Level 3 Obfuscates the Issue by using Erroneous 251(b)(5) Arguments

- **Level 3's Propositions:**
  - **251(b)(5) applies to all telecom traffic, not just local traffic**
  - **Deviations from 251(b)(5) are authorized only on an interim basis for pre 1996 access rules**
  - **There were no pre 1996 access rules for ISP-bound traffic**
- **Level 3 is Wrong:**
  - **The ESP exemption, which governs VoIP access, has been in effect since 1984**

Qwest
Spirit of Service

Qwest VoIP Services

- **Qwest's Definition is consistent with the FCC's definition of True VoIP:**
  - An Interstate Service
  - *Originates in Internet Protocol via CPE over a broadband connection (Vonage Order, paragraphs 4 & 6)*
  - Requires a net protocol conversion when terminating calls to the PSTN
- **We agree with Level 3 that:**
  - "True IP voice" is an Information Service
  - *Providers of "True IP voice" are entitled to be treated in exactly the same manner as other end users under the ESP Exemption*
- **We disagree with Level 3 that the petition should be granted**

Qwest
Spirit of Service

Legitimate Application of the ESP Exemption for True VoIP Calls

- **Applies solely to ESPs in their offering of information services**
- ***Applicable only in circumstances where the ESP POP is in the <u>same local calling area</u> as the called party***
- **Allows an ESP to be treated as an end user for purposes of terminating calls for its end users**
  - **ESPs have the option of purchasing local retail business services as a means to terminate traffic for these customers**

Qwest
Spirit of Service

True-VoIP-Originated Call to PSTN End User

1. VoIP Phone or VoIP Adapter at Customer Premises
2. Call initiated in IP over a Broadband Connection (e.g. IP over: DSL, T1, or Cable modem)
3. Call is routed via the Internet Protocol Network to an Enhanced Service Provider/VoIP Provider's POP located in the same Local Calling Area as the terminating PSTN end user
4. ESP/ VoIP Provider purchases Retail Service (PRI) to connect to CLEC
5. CLEC passes traffic to ILEC via Interconnection Trunks. Reciprocal Compensation applies
6. ILEC terminates call to end user. Local service charge applies.

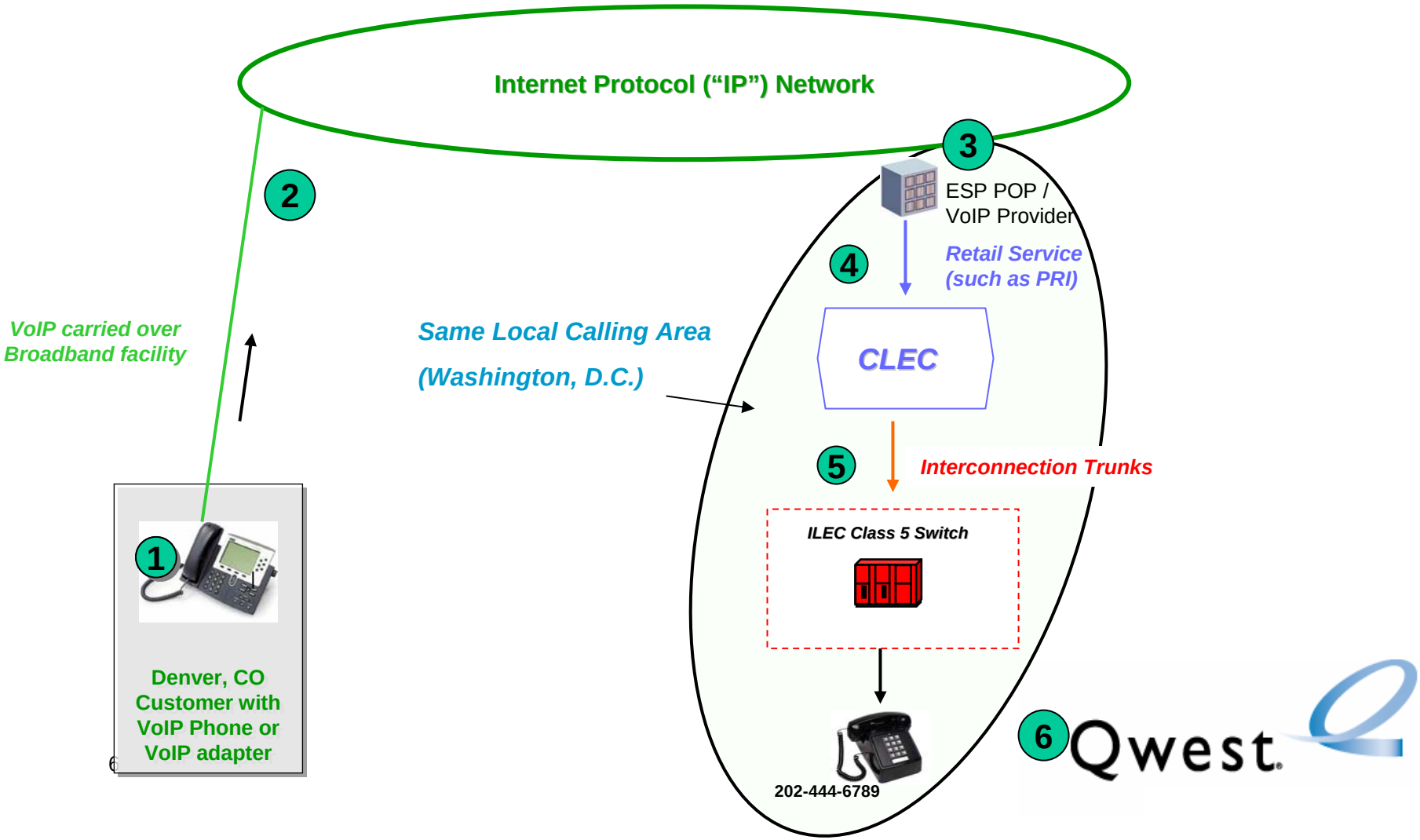

"1+" Calls to VoIP End Users are Not Compensable Under 251(b)(5)

- This is not True VoIP
- Originating end user is purchasing a telecom service to the ESP POP
- Access charges are then determined based upon the dialing pattern and the locations of the ESP POP and the calling party
  - If the call to the ESP POP requires a "1+" number, interexchange access charges are assessed

Qwest
Spirit of Service

PSTN-originated Call to VoIP End User

1. End user in Denver dials a "1+" call to an end user in Washington, D.C. Call is transported in TDM. The originating end user has purchased a telecom service from the originating LEC
2. Call routes from ILEC SWC to designated IXC. Switched access / FG-D charges apply.
3. IXC carries call from Denver to Washington, D.C. and hands the call off to Washington, D.C.-based ILEC. Jointly provided switched access charges apply
4. The ILEC sends traffic via its tandem to the CLEC switch. Jointly provided switched access charges apply.
5. CLEC sends the call to the ESP/VoIP Provider via a Retail Service (such as PRI) offered via contract or tariff.
6. ESP/VoIP provider converts the call to IP and terminates the call to its VoIP end user customer via a broadband connection.

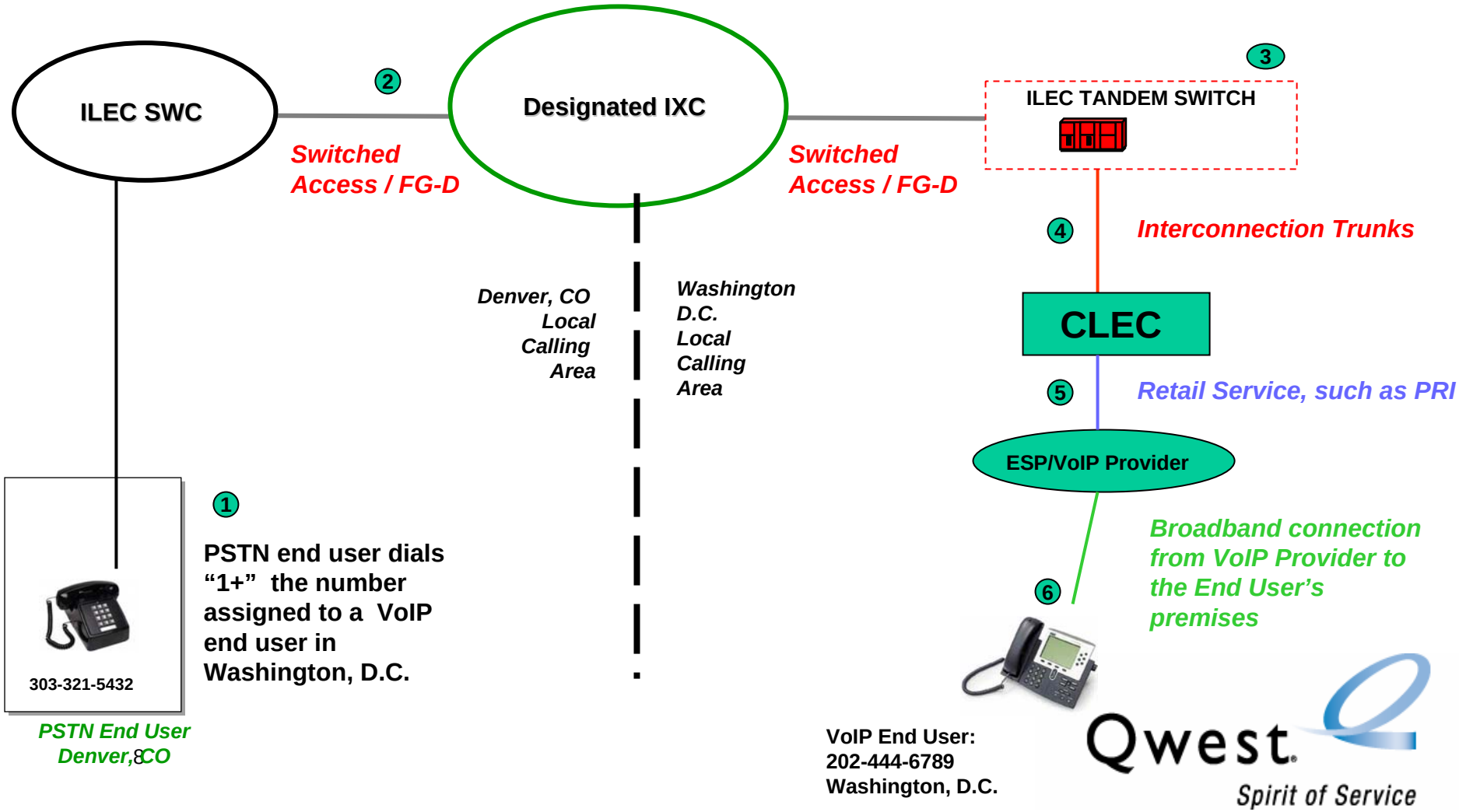

FCC Action Required

- FCC should deny Level 3's petition
- FCC should reconfirm the application of the ESP exemption to true VoIP services as it exists today
  - A true VoIP provider is entitled to purchase local PRI services to its POP the same as any other end user
- FCC should clarify that CLECs can not terminate access traffic over interconnection trunks disguised as VoIP
- FCC should move quickly to affirm that true VoIP service is an information service in the IP-Enabled NPRM
- FCC should move quickly to resolve the Intercarrier Compensation docket

Qwest
Spirit of Service