LEVEL 3 FORBEARANCE PETITION >>

WC DOCKET 03-266

March, 2005

BELLSOUTH®

>> Comprehensive Rulemaking is Preferable

A comprehensive approach to inter-carrier compensation is necessary to ensure:

- Creation of a unified regime
- Long-term regulatory certainty
- Parity for all providers

In stark contrast to a comprehensive approach, granting Level 3's petition for forbearance would exacerbate the existing patchwork of disparate rules and create additional problems for the entire industry.

>> Deficiencies in Level 3's Petition

- No public policy justification for granting petition.
- No realistic plan to implement.
- FCC's lack of legal authority to grant relief sought.

>> No Public Policy Justification for Granting Petition

- Alleged uncertainty that petition purports to resolve has not adversely impacted the industry.
- Prejudges the jurisdictional question in WorldCom remand proceeding – e.g., whether Section 251(b)(5) applies to non-local interstate traffic.
- Prejudges issues pending in the Unified Inter-Carrier Compensation NPRM – e.g., what compensation arrangements should apply to interstate traffic.

>> Exponential VoIP Growth

As opposed to the minimal VoIP growth rate suggested by Level 3 in its petition, analysts expect residential VoIP subscriptions to triple in 2005 with accelerated growth through 2010.

- Year-end 2004 residential VoIP customers totaled **1.13M**
- Year-end 2005 residential VoIP customers projected at **3.4M**
- VoIP expected to reach **29.2M** residential customers by 2010

The speed at which VoIP is penetrating U.S. households, and thus the volume of IP-enabled traffic that would be subject to Level 3's forbearance petition, is expected to grow exponentially in the coming years.

Source: Pike & Fischer, VoIP Monitor, January 05, 2005, Article ID: 12185119. Note: Projected VoIP subscriptions include U.S. households only.

>> VOIP Subscribership Continues to Grow

- Vonage is adding 10,000 to 15,000 VoIP customers per week, while cable operators such as Time Warner and Cablevision are adding 10,000 and 8,000 new VoIP customers each week, respectively.
- Vonage forecasts that its residential subscribers in the U.S. will nearly triple this year from approximately 1 million customers in 2004 to 2.8 million by the end of 2005.
- Business use of VoIP is expected to nearly triple this year, with the percentage of businesses with VoIP growing from 12% to 34% by the end of 2005.

>> VOIP Prices are Low and Getting Lower

- VoIP prices are currently 30-40% below comparable circuit-switched offerings.
- Vonage offers service for $25, while AT&T charges $30 for its unlimited local and long distance VoIP service.
- Dialpad just announced an unlimited calling plan for only $11.99 per month.

>> VOIP Providers are Enjoying Sizeable Profit Margins

- Vonage reports profit margins of 70% headed to 80%.
- Cable operators report profit margins for VoIP between 40% and 60%.

>> Additional Industry Disputes

- If Level 3's forbearance petition is granted, the FCC will have necessarily decided that IP-PSTN traffic was subject to access charges.
- Carriers will seek to collect unpaid access charges for IP-PSTN and "incidental" PSTN-PSTN traffic exchanged prior to any forbearance being granted.
- Because of the difficulties in identifying IP traffic and with opportunities for arbitrage, there will likely be numerous disputes about what charges should apply.

>> No Realistic Plan to Implement

- Today, usage is divided into several different call rating categories based on the jurisdiction of the physical end points of the call (e.g., interstate, intrastate, and local).

- Currently, there is no method in place for carriers to differentiate between IP traffic and non-IP traffic for compensation purposes.

- It is not even clear what type of traffic would be subject to Level 3's petition (e.g., "incidental" PSTN-PSTN) and how such traffic would be captured for call rating purposes.

- Allowing carriers to pay a lesser rate for IP-PSTN calls that were formerly access calls would provide carriers with an incentive to misrepresent traffic as IP, which is difficult, if not impossible, to even identify.

>> Implementation of an IP Call Rating Category

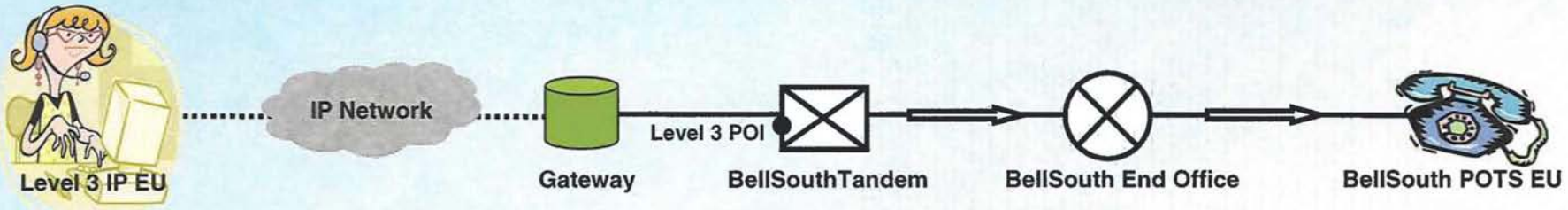

Scenario 1. Level 3 IP Originating to BLS Terminating (PSTN)

- Level 3's petition proposes a solution to <u>only one</u> of many call flows that are affected by using a field in the SS7 record to differentiate between originating IP or POTS traffic.
- Even that solution is flawed because the IP company would solely control determination of whether it pays access or reciprocal compensation to the terminating PSTN carrier.

Implementation Concerns:

- There is currently no mechanism in place that allows the terminating PSTN carrier to identify the call as IP.
- Audit and control procedures must be developed to verify and maintain a record of the IP call.
- The billing systems do not interface with SS7; and thus, there is no way to generate bill.

BELLSOUTH

>> Implementation of an IP Call Rating Category

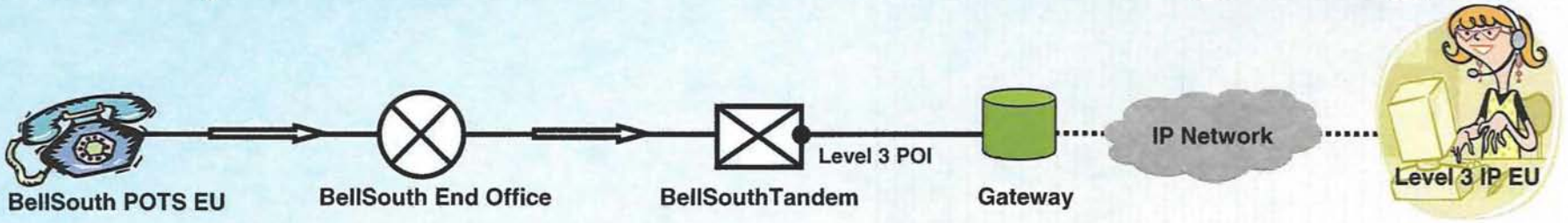

Scenario 2. BellSouth Originating (PSTN) to Level 3 IP Terminating

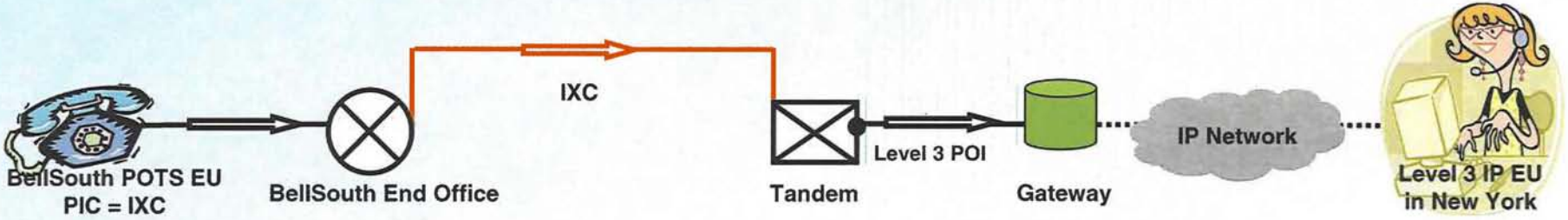

Scenario 3. BellSouth Originating (PSTN) to IXC to Level 3 IP Terminating

- Level 3's petition does not propose how to differentiate IP traffic in scenarios 2 or 3.
- Once again, in scenario 2 an originating PSTN carrier would have no way of knowing if the call was terminated in IP format. As a result, the originating carrier would have to rely on the IP carrier to allow for correct rating of the call.
- Likewise, in scenario 3 an intermediate IXC carrier would have no way of knowing if the call was terminated in IP format. The IXC would have to rely on the IP carrier to classify the traffic accurately and to allow for correct rating of the call.

BELLSOUTH®

>> No Realistic Plan to Implement

Today's Rules if the Traffic is…

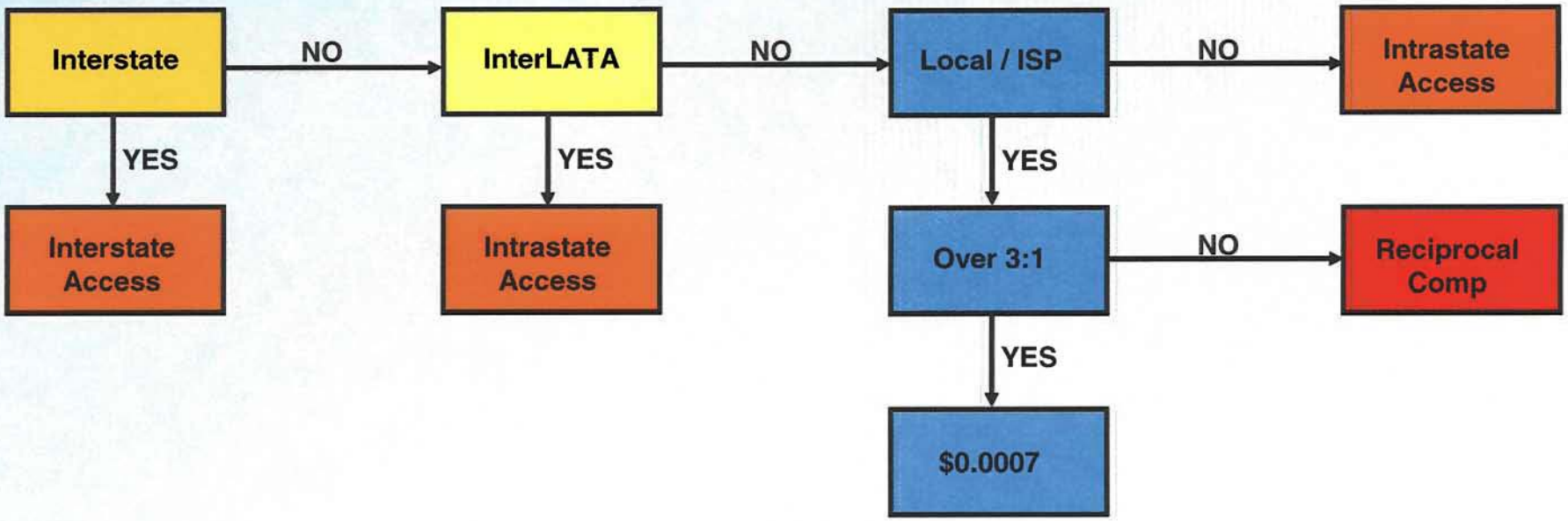

To simplify diagram interstate intraLATA traffic, CMRS traffic, and transit interconnection regime not included.
Additionally, this diagram is based on the current compensation regime established by the FCC. Virtual NXX is not addressed.

BELLSOUTH®

>> No Realistic Plan to Implement

Rules resulting from Level 3's request if the traffic is…

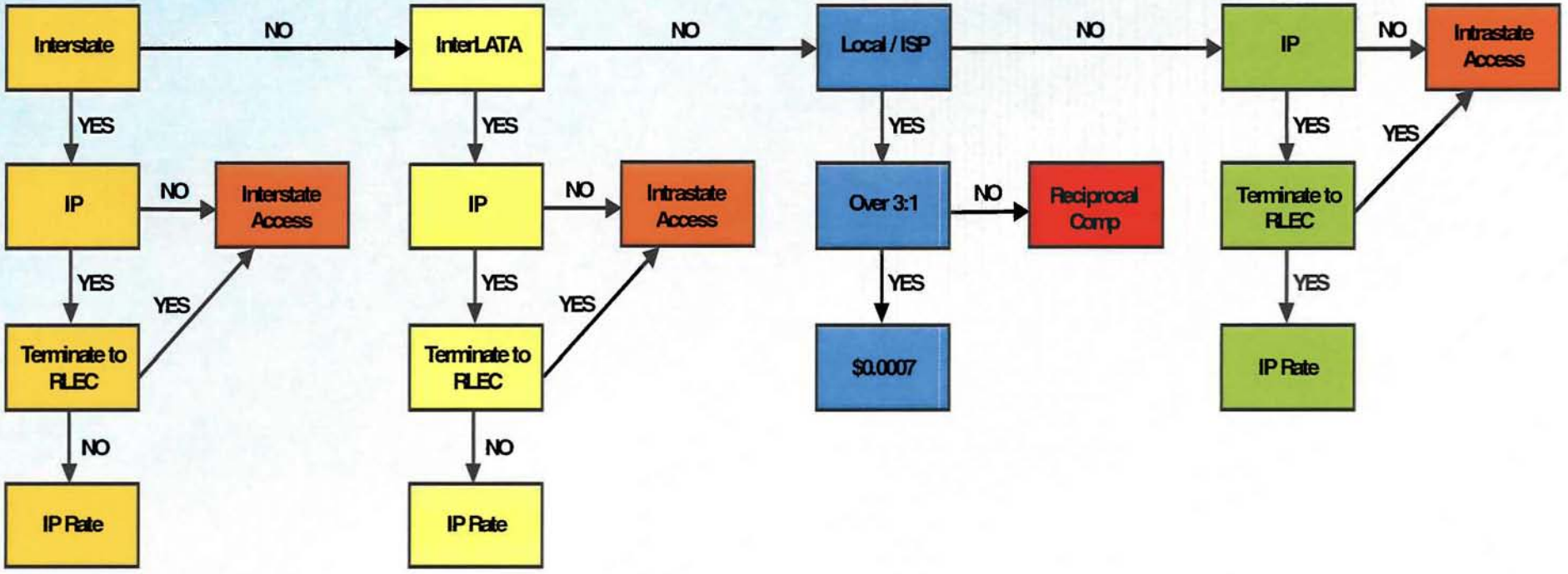

To simplify diagram interstate intraLATA traffic, CMRS traffic, and transit interconnection regime not included.
Additionally, this diagram is based on the current compensation regime established by the FCC. Virtual NXX is not addressed.

BELLSOUTH

>> FCC Lacks Legal Authority to Grant Relief

- Level 3's petition fails to satisfy the requirements for regulatory forbearance under Section 160(a).
- The FCC cannot forbear from applying or enforcing only a portion of Section 251(g) as Level 3 requests.
  - Equal access and nondiscriminatory requirements under the pre-1996 Act regime and the right to receive access charges are intertwined
  - FCC's forbearance authority is limited to "regulation" or "provision"
  - Section 251(g) pre-1996 Act regime must remain in place until changed by "regulations prescribed by the Commission…"
- FCC cannot lawfully subject IP traffic to reciprocal compensation under Section 251(b)(5).
  - Section 251(b)(5) is limited to local traffic and cannot lawfully be extended to interstate traffic
  - Extending Section 251(b)(5) to interstate traffic is an issue in dispute in the WorldCom remand proceeding
  - Subjecting IP traffic to Section 251(b)(5) would allow states to establish rates for traffic determined to be within the Commission's exclusive authority

>> Conclusion

The Commission recognized and commented on the issue of non-discriminatory inter-carrier compensation in its IP-Enabled Services NPRM:

> *"As a policy matter, we believe that any service provider that sends traffic to the PSTN should be subject to similar compensation obligations, irrespective of whether the traffic originates on the PSTN, or an IP network, or on a cable network. We maintain that the cost of the PSTN should be borne equitably among those that use it in similar ways."* W.C. Docket No. 04-36, NPRM In the Matter of IP-Enabled Services, ¶ 33

Given the interim nature of this problem, the Commission should, for policy and legal reasons, deny Level 3's petition and focus on implementing comprehensive inter-carrier compensation reform.