Data Run Date: 11/28/2004

FCC Report 43-04, the ARMIS Access Report
Table I. Separations and Access Data

Report Number	COSA	Company	Year	Row	Row Title	Subject to Separations	State	Interstate
4304	SBTR	SBC Communications	1997	4011	Network Access Service Rev. - Switched Access	2,860,460		2,860,460
4304	SBTR	SBC Communications	1998	4011	Network Access Service Rev. - Switched Access	2,246,741		2,246,741
4304	SBTR	SBC Communications	1999	4011	Network Access Service Rev. - Switched Access	2,081,563		2,081,563
4304	SBTR	SBC Communications	2000	4011	Network Access Service Rev. - Switched Access	1,821,762		1,821,762
4304	SBTR	SBC Communications	2001	4011	Network Access Service Rev. - Switched Access	1,197,211		1,197,211
4304	SBTR	SBC Communications	2002	4011	Network Access Service Rev. - Switched Access	1,064,227		1,064,227
4304	SBTR	SBC Communications	2003	4011	Network Access Service Rev. - Switched Access	2,063,871	1,147,492	916,380
4304	VCTR	Verizon Communications	1997	4011	Network Access Service Rev. - Switched Access	5,019,400		5,019,400
4304	VCTR	Verizon Communications	1998	4011	Network Access Service Rev. - Switched Access	4,520,012		4,520,012
4304	VCTR	Verizon Communications	1999	4011	Network Access Service Rev. - Switched Access	4,050,691		4,050,691
4304	VCTR	Verizon Communications	2000	4011	Network Access Service Rev. - Switched Access	3,263,985		3,263,985
4304	VCTR	Verizon Communications	2001	4011	Network Access Service Rev. - Switched Access	2,490,076		2,490,076
4304	VCTR	Verizon Communications	2002	4011	Network Access Service Rev. - Switched Access	1,923,441		1,923,441
4304	VCTR	Verizon Communications	2003	4011	Network Access Service Rev. - Switched Access	3,267,397	1,641,702	1,625,690

PRICE STIMULATION OF ACCESS MOUS

Regression Model (Using Interstate AMOU and Toll Price data)

*IS AMOU/Line = Intercept + Coefficient 1 * Wireless Subscribership + Coefficient 2 * Toll Price*

Resulting Regression Equation based on Interstate AMOU and Toll Price data below (all Coefficients are statistically significant)

*IS AMOU/Line = 3722.77 - 0.004 * Wireless Subscribership - 4418.92 * Toll Price*

Main Conclusions:

a) a decrease in Toll Price is associated with an increase in Access Minutes

b) an increase in Wireless Subscribership is associated with a decrease in Access Minutes

Effect of Price Decrease:

1 IS AMOU/Line at Toll Price $0.09 2,762

2 Regression Model Projections:

If price decreases from $0.09	*to $0.05:*	*to $0.00:*
IS AMOU/Line change by	177	398
New IS AMOU/Line at $ 0.05	2,939	3,160
IS AMOU Increased by a Factor	1.06	1.14

zero marginal price under VoIP

DATA FOR THE REGRESSION

	Dependend Variable		Explanatory Variable 1	Explanatory Variable 2
	IS AMOU/Line		Wireless Subscribers (CTIA) in '000s	Average Revenue Per Minute for Interstate and International Calls in 2002 dollars
Source:	SOCC 10/2005 Tab 9.10 over SOCC Tab 9.1		SOCC 10/2004 Tab 5.8	Trends Report May 2004 Tab 15.4
1985	1,617		340	0.51
1986	1,731		682	0.46
1987	1,528		1,231	0.39
1988	2,118		2,069	0.36
1989	2,302		3,509	0.32
1990	2,349		5,283	0.28
1991	2,456		7,557	0.26
1992	2,325		11,033	0.25
1993	2,649		16,004	0.24
1994	2,731		24,134	0.22
1995	2,831		33,786	0.20
1996	2,860		44,043	0.19
1997	2,874		55,313	0.18
1998	2,950		69,209	0.16
1999	3,022		86,047	0.15
2000	2,954		109,478	0.12
2001	2,822		128,375	0.11
2002	2,762		140,767	0.09

Note: Time series ends in 2002 because 2003 Toll Data are not available

REGRESSION ANALYSIS -- OUTPUT

SUMMARY OUTPUT

Regression Statistics	
Multiple R	0.97422278
R Square	0.94911002
Adjusted R Square	0.94232469
Standard Error	108.204965
Observations	18

ANOVA

	df	*SS*	*MS*	*F*	*Significance F*
Regression	2	3275441.976	1637720.988	139.8768	1.99408E-10
Residual	15	175624.7165	11708.31443		
Total	17	3451066.692			

	Coefficients	*Standard Error*	*t Stat*	*P-value*	*Lower 95%*	*Upper 95%*	*Lower 95.0%*	*Upper 95.0%*
Intercept	3722.76844	127.2019431	29.26660039	1.198E-14	3451.643915	3993.89296	3451.643915	3993.89296
X Variable 1	-0.00358863	0.000944666	-2.740261195	0.0151806	-0.004602137	-0.000575123	-0.004602137	-0.000575123
X Variable 2	-4418.92729	368.667362	-11.98621714	4.391E-09	-5204.723214	-3633.131373	-5204.723214	-3633.131373

PRICE STIMULATION OF ACCESS MOUS

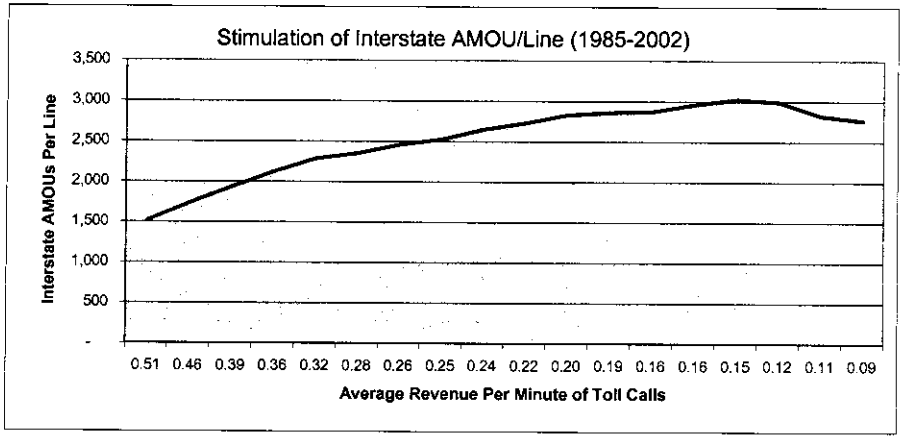

POTS vs. VoIP PRICE COMPARISON[2]					
	One Line per Residence			Two Lines per Residence	
	POTS 1 line	**POTS 1 line**	**VoIP on naked DSL**	**POTS 2 lines**	**VoIP on full DSL (1 POTS)**
Rate	**no features**	**with features**		**no features**	
Elements	*l-d by AT&T*	*l-d by Qwest*	*AT&T CallVantage*	*l-d by AT&T*	*AT&T CallVantage*
Assumed Monthly LD POTS usage (MOUs)	**300**			**400**	
Local Line	$ 14.00	$ 26.99		$ 28.00	*$ 14.00*
SLC	$ 6.50	$ 6.50	$ -	$ 13.50	$ 6.50
L-D Rate (per min)	$ 0.07	$ 0.05	*no marginal rate*	$ 0.07	*no marginal rate*
Flat Charge/Minimum Charge	$ 7.00	$ 2.99	$ 29.99	$ 7.00	$ 29.99
L-D expenses	$ 14.00	$ 12.99	-	$ 28.00	-
Total Expense w/o DSL	**$ 34.50**	**$ 45.48**	**$ 29.99**	**$ 69.50**	**$ 50.49**
Cheaper	VoIP	VoIP		VoIP	
Break Even L-D Volumes (VoIP becomes cheaper)	135.57	NA (Zero)		128.43	
Ratio: Break Even VoIP volumes over POTS L-D Volumes	***0.68***	NA		***0.32***	
DSL Price per Month[3]			$ 33.00		$ 28.00
Total Expense with DSL	**$ 34.50**	**$ 45.48**	**$ 62.99**	**$ 69.50**	**$ 78.49**
Cheaper	POTS	POTS		POTS	

Measure for comparison if High Speed Internet is bought anyway (not for VoIP)

Measure for comparison if DSL is bought for VoIP specifically

Note (1): The purpose of this worksheet is to show that VoIP presents cost advantages for high-volume long-distance callers and those who subscribe to local feature packages. Includes monthly expenses - not taxes or one-time charges.

Note (2): Rates are rounded based on Qwest local and LD, AT&T LD and AT&T CallVantage Plans.

Note (3): Qwest DSL 640K

Attachment 2
Call Flow Diagrams

QSI Technical Documentation

Document Number: 012605A

Attachment 2

Call Flow Diagrams

QSI consulting, inc.

Contact Information

2977 Highway K
Box #304
O'Fallon, MO 63366-7862
www.qsiconsulting.com
636.272.4127

QSI consulting, inc.

TRADITIONAL INTERSTATE TOLL CALL
PSTN TO PSTN

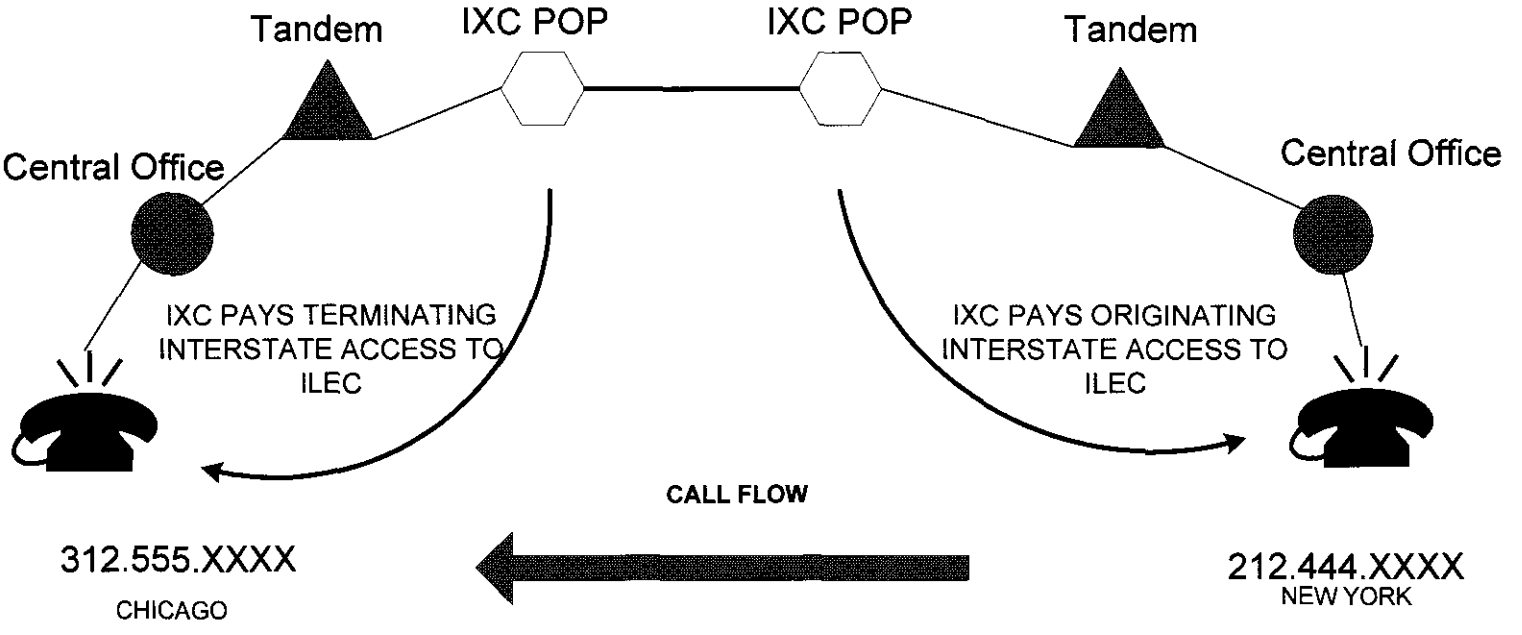

212.444.XXXX DIALS 1+ 312.555.XXXX

Diagram 1

VoIP Impact Model.
Attachment 2.

QSI consulting, inc.

TRADITIONAL INTERSTATE TOLL CALL
PSTN TO PSTN

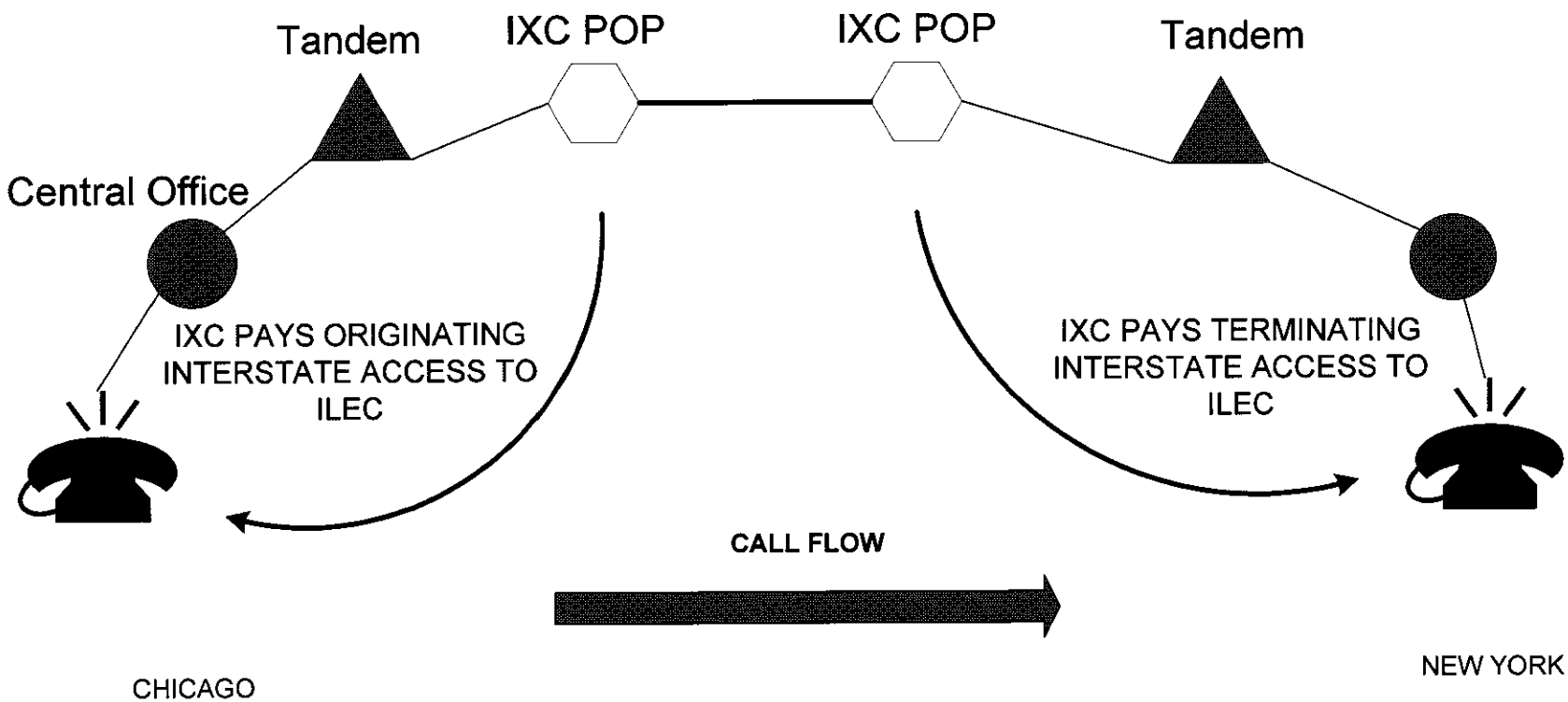

312.555.XXXX DIALS 1+ 212.444.XXXX

Diagram 2

VoIP Impact Model.
Attachment 2.

QSI consulting, inc.

NON-ILEC IP TO PSTN

Model Call Flow Type B - 1

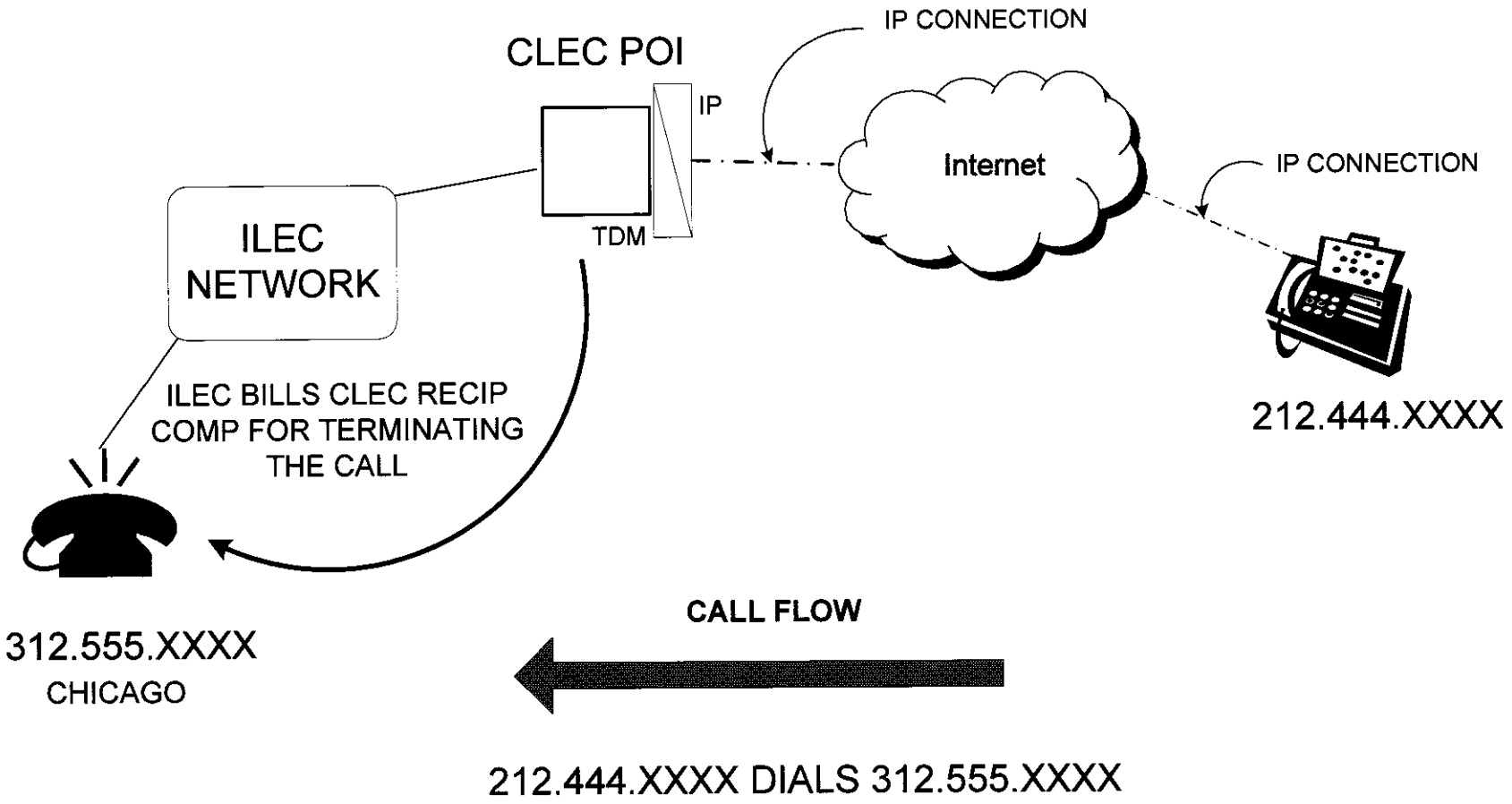

Diagram 3

VoIP Impact Model.
Attachment 2.

QSI consulting, inc.

ILEC IP TO PSTN

Model Call Flow Type B - 2

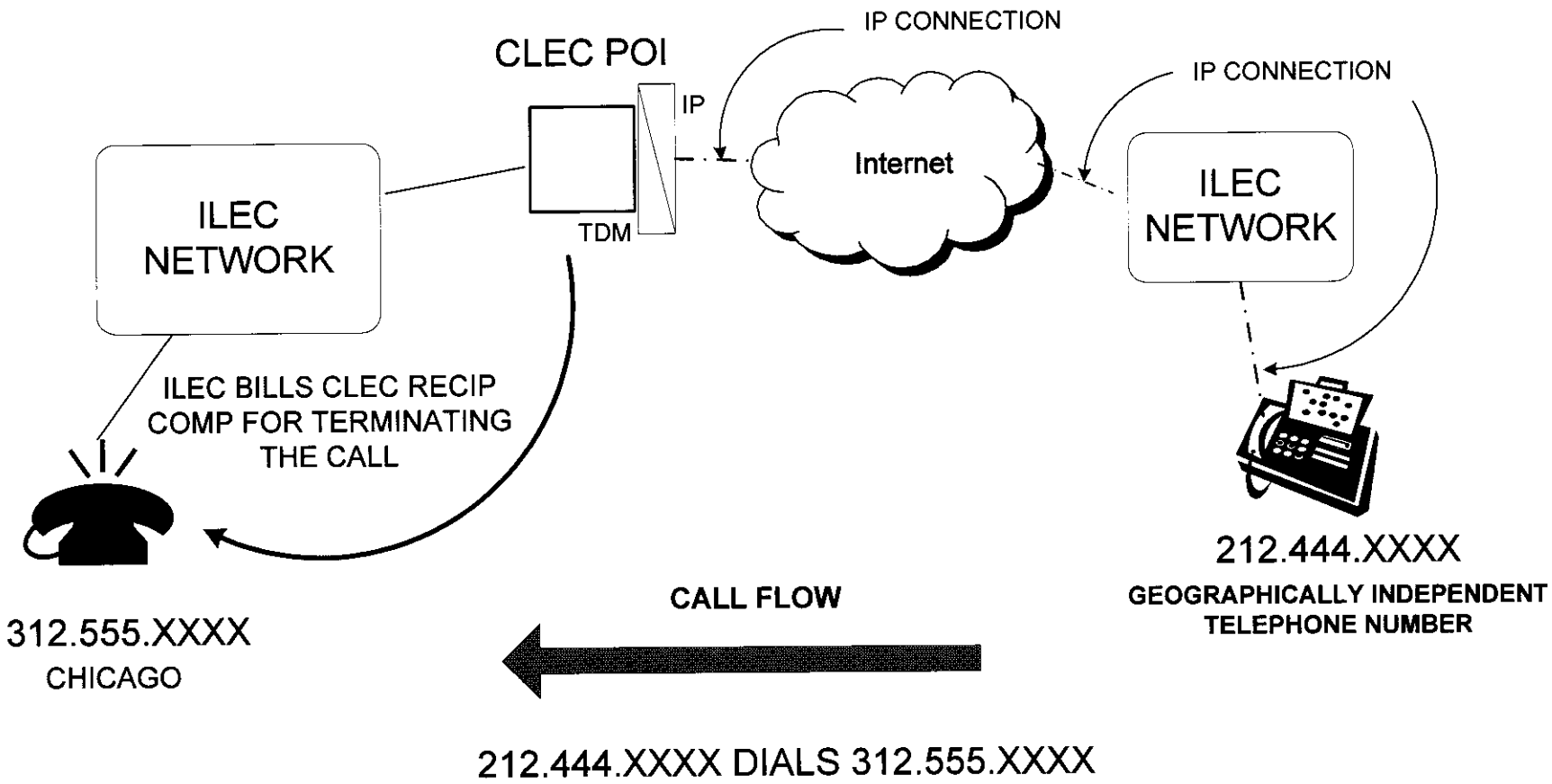

Diagram 4

VoIP Impact Model.
Attachment 2.

QSI consulting, inc.

PSTN TO NON-ILEC IP

Model Call Flow Type A - 1

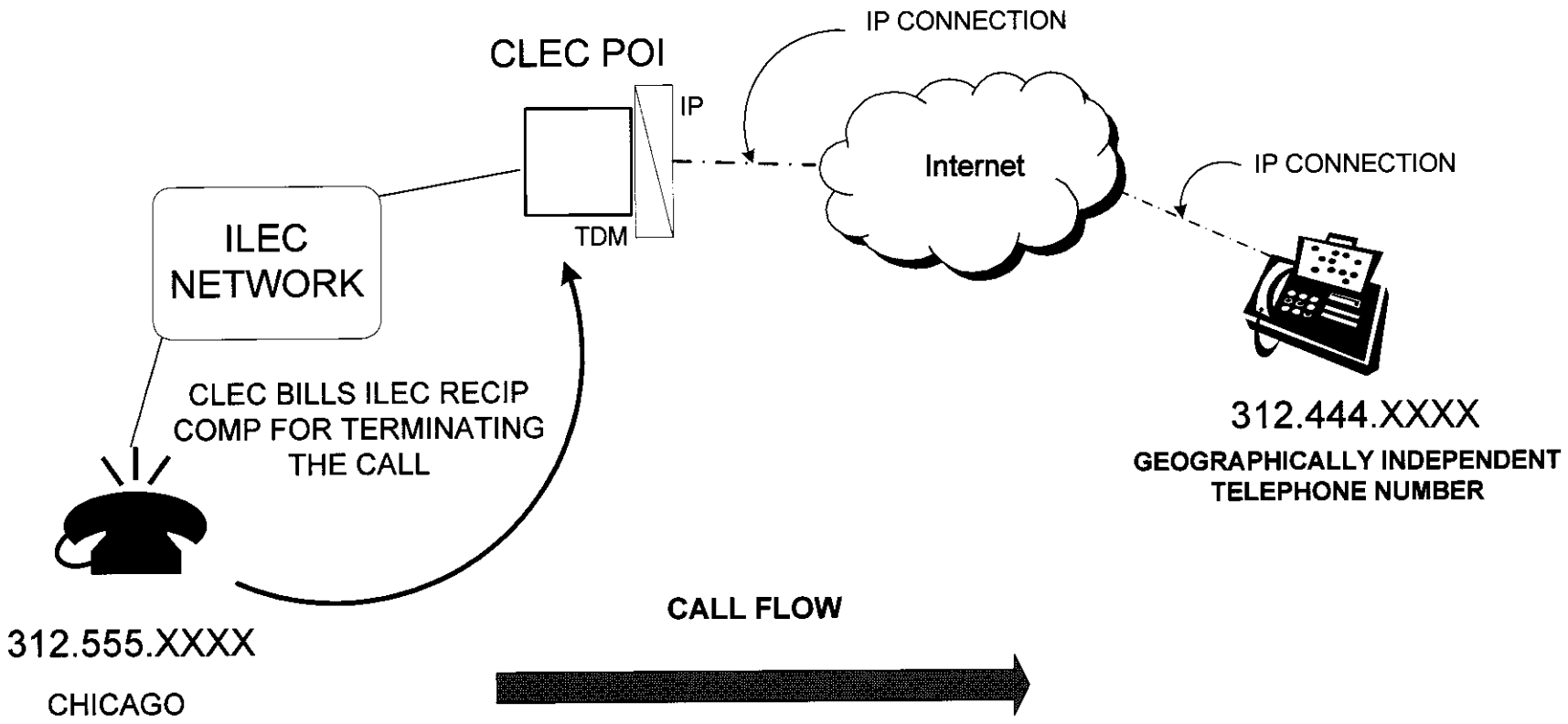

312.555.XXXX DIALS 312.444.XXXX

Diagram 5

VoIP Impact Model.
Attachment 2.

QSI consulting, inc.

PSTN TO ILEC IP

Model Call Flow Type A - 2

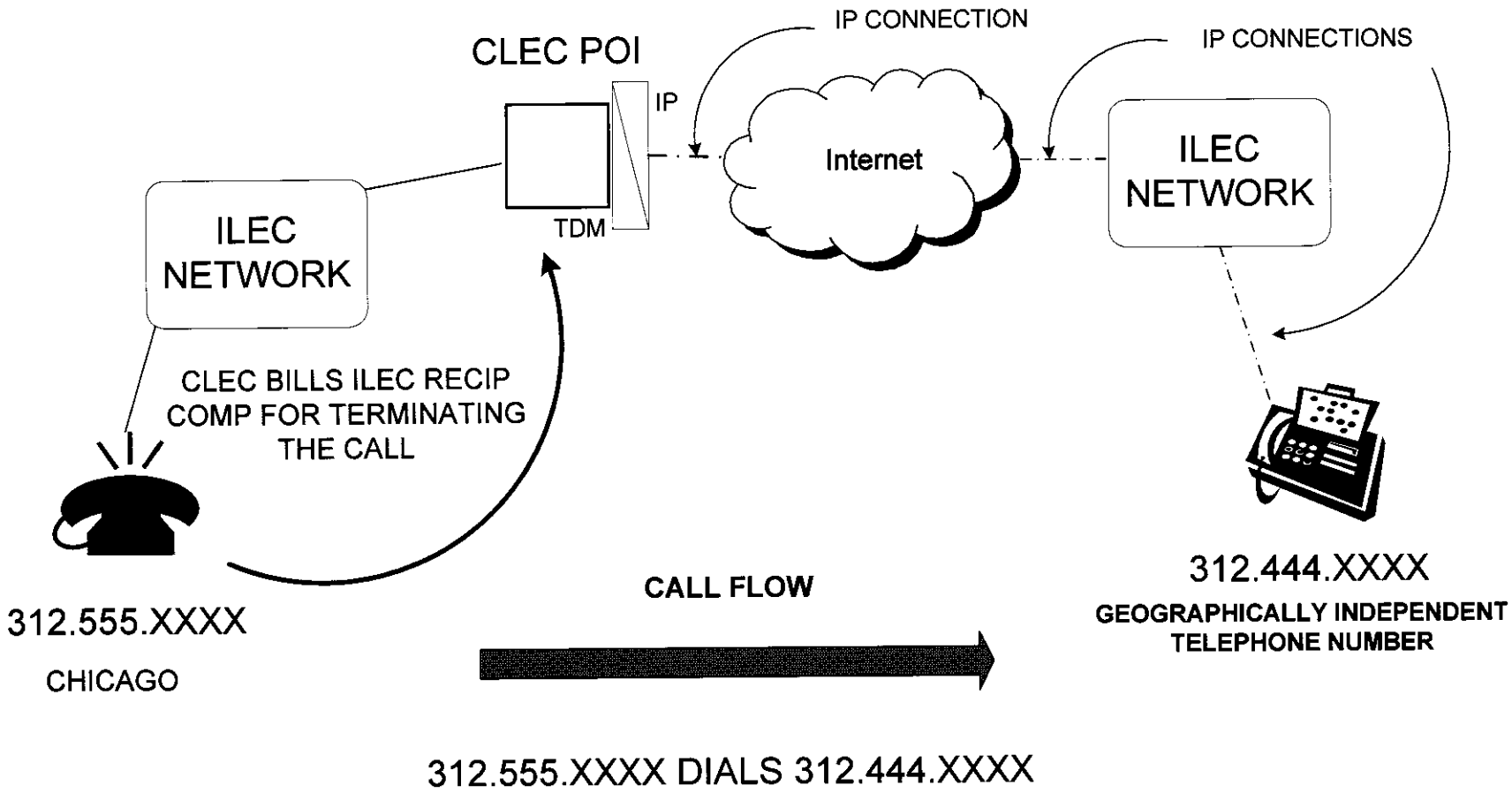

Diagram 6

VoIP Impact Model.
Attachment 2.