Before the
Federal Communications Commission
Washington, D.C. 20554

In the Matter of Developing a Unified Intercarrier Compensation Regime	CC Docket No. 01-92

COMMENTS OF THE INTERCARRIER COMPENSATION FORUM

Gary M. Epstein
Richard P. Bress
Richard R. Cameron
Alexander Maltas
LATHAM & WATKINS LLP
555 Eleventh Street, N.W., Suite 1000
Washington, D.C. 20004
(202) 637-2200

Counsel for the Intercarrier Compensation Forum

AT&T Corp.
Leonard C. Cali
Lawrence J. Lafaro
Joel E. Lubin
AT&T CORP.
One AT&T Way, Room 3A214
Bedminster, New Jersey 07921

David L. Lawson
James P. Young
SIDLEY AUSTIN BROWN & WOOD LLP
1501 K Street, N.W.
Washington, D.C. 20005
Counsel for AT&T Corp.

Global Crossing North America Inc.
Paul Kouroupas
Vice President, Regulatory Affairs
GLOBAL CROSSING NORTH AMERICA, INC.
200 Park Avenue, 3rd Floor
Florham Park, New Jersey 07932

Level 3 Communications LLC
William P. Hunt, III
Cindy Z. Schonhaut
LEVEL 3 COMMUNICATIONS LLC
1025 Eldorado Boulevard
Broomfield, Colorado 80021

John T. Nakahata
HARRIS, WILTSHIRE & GRANNIS, LLP
1200 18th Street, N.W. Suite 1200
Washington, D.C. 20036
Counsel for Level 3 Communications LLC

General Communication, Inc.
Tina Pidgeon
Vice President- Federal Regulatory Affairs
GENERAL COMMUNICATION, INC.
1130 17th Street, N.W.
Suite 410
Washington, D.C. 20036

John T. Nakahata
HARRIS, WILTSHIRE & GRANNIS LLP
1200 Eighteenth Street, NW
Suite 1200
Washington, D.C. 20036
Counsel for General Communication, Inc.

Iowa Telecom
D. M. Anderson
Vice President - External Affairs
Edward B. Krachmer
Director - Regulatory Affairs
IOWA TELECOM
115 South Second Avenue West
Newton, Iowa 50208

MCI, Inc.
Richard S. Whitt
Vice President Federal Regulatory
MCI, INC.
1133 19th St. N.W.
Washington, D.C. 20036

A. Richard Metzger, Jr.
LAWLER, METZGER, MILKMAN & KEENEY, LLC
2001 K Street, N.W., Suite 802
Washington, D.C., 20006
Counsel for MCI, Inc.

SBC Communications Inc. on behalf of its affiliates
Christopher M. Heimann
Gary L. Phillips
Paul K. Mancini
SBC TELECOMMUNICATIONS, INC.
1401 Eye Street, N.W.
Washington, D.C. 20005

Sprint Corporation
Richard Juhnke
Charles McKee
Jeff Lindsey
Pete Sywenki
SPRINT CORPORATION
401 Ninth Street, N.W.
Washington, D.C. 20004

Valor Telecommunications, LLC
William M. Ojile, Jr.
Senior Vice President, Chief Legal Officer & Secretary
VALOR TELECOMMUNICATIONS, LLC
201 East John Carpenter Freeway
Irving, Texas 75062

Table of Contents

INTRODUCTION AND SUMMARY 2

DISCUSSION 10

I. THE GOALS OF REFORM 10

A. CREATE UNIFORMITY 11

B. PROMOTE MARKET-ORIENTED SOLUTIONS 13

C. PRESERVE AND ENHANCE UNIVERSAL SERVICE 16

D. ADDRESS THE CONCERNS OF RURAL CUSTOMERS AND CARRIERS 18

II. THE ICF PLAN CREATES A COMPREHENSIVE SOLUTION THAT ACHIEVES ALL THE COMMISSION'S OBJECTIVES 20

A. THE ICF PLAN CREATES UNIFORM, NEUTRAL RULES FOR NETWORK INTERCONNECTION AND INTERCARRIER COMPENSATION 20

1. Uniform Network Interconnection 20

2. Uniform Intercarrier Compensation 25

B. THE ICF PLAN PROMOTES MARKET-BASED SOLUTIONS 29

C. THE ICF PLAN PRESERVES AND ENSURES A STABLE FUNDING SOURCE FOR UNIVERSAL SERVICE 31

D. THE ICF PLAN ADDRESSES THE SPECIAL CONCERNS OF RURAL CONSUMERS AND CARRIERS 34

III. THE ICF PLAN IS AUTHORIZED BY EXISTING LAW 37

A. THE COMMISSION HAS FULL JURISDICTION UNDER THE COMMUNICATIONS ACT, AS AMENDED BY THE 1996 ACT, TO ESTABLISH UNIFORM INTERCARRIER COMPENSATION RULES FOR ALL CLASSES OF TRAFFIC 38

B. THE COMMISSION HAS SUBSTANTIVE AUTHORITY TO IMPOSE BILL AND KEEP FOR ALL TELECOMMUNICATIONS TRAFFIC AND TO IMPOSE THE ICF PLAN'S PROPOSED TRANSITION FROM CURRENT RATES TO BILL AND KEEP 44

IV. NO OTHER PLAN CURRENTLY BEFORE THE COMMISSION OFFERS A COMPREHENSIVE, DETAILED, LEGAL SOLUTION THAT SERVES THE PUBLIC INTEREST AND MEETS THE COMMISSION'S REFORM GOALS 48

A. NO OTHER PROPOSAL OFFERS EITHER A COMPREHENSIVE OR BALANCED SOLUTION. 48

B. THE OTHER PLANS WOULD ALL CONTINUE TO SUBJECT IDENTICAL USES OF THE NETWORK TO RADICALLY DIFFERENT REGULATORY REGIMES. 55

C. THE OTHER PLANS WOULD REQUIRE MASSIVE AND BURDENSOME PROCEEDINGS TO IMPLEMENT AND WOULD PROVOKE ENDLESS LITIGATION. 67

D. THE OTHER PLANS WOULD NOT ADEQUATELY ADDRESS OR PROTECT UNIVERSAL SERVICE. 72

E. SEVERAL OF THE COMPETING PROPOSALS ARE UNLAWFUL 76

CONCLUSION 82

APPENDIX A - THE ICF PLAN IS CONSISTENT WITH EXISTING LAW A-1

A. THE COMMISSION HAS FULL JURISDICTION UNDER THE COMMUNICATIONS ACT, AS AMENDED BY THE 1996 ACT, TO ESTABLISH UNIFORM INTERCARRIER COMPENSATION RULES FOR ALL CLASSES OF TRAFFIC A-1

B. THE COMMISSION HAS SUBSTANTIVE AUTHORITY TO IMPOSE BILL AND KEEP FOR ALL TELECOMMUNICATIONS TRAFFIC AND TO IMPOSE THE ICF PLAN'S PROPOSED TRANSITION FROM CURRENT RATES TO BILL AND KEEP A-7

C. THE COMMISSION HAS AUTHORITY UNDER SECTION 251(B)(5) AND SECTION 254 TO RAISE THE SLC AND ESTABLISH THE ICRM AND TNRM, EVEN THOUGH THOSE MECHANISMS WILL COVER SOME COSTS CURRENTLY BOOKED AS "INTRASTATE" A-11

D. THE COMMISSION HAS FULL AUTHORITY TO ADOPT THE ICF PLAN'S CONTRIBUTION METHODOLOGY FOR UNIVERSAL SERVICE A-16

E. THE COMMISSION HAS FULL AUTHORITY TO IMPLEMENT THE ICF PLAN'S INTERCONNECTION RULES A-20

F. THE COMMISSION MAY REQUIRE THE PROVISION OF TRANSIT AND REGULATE RATES FOR SUCH TRANSIT A-22

APPENDIX B – ICF MODEL DOCUMENTATION AND RESULTS B-1

APPENDIX C – SUMMARY OF THE ICF PLAN C-1

APPENDIX D – THE ICF REFORM PLAN D-1

APPENDIX E – DIAGRAMS OF INTERCONNECTION AGREEMENTS IN TODAY'S ENVIRONMENT AND UNDER THE ICF PLAN E-1

Before the
Federal Communications Commission
Washington, D.C. 20554

In the Matter of Developing a Unified Intercarrier Compensation Regime	CC Docket No. 01-92

Comments of the Intercarrier Compensation Forum

The Intercarrier Compensation Forum ("ICF"), by the undersigned, hereby offers these comments on the Commission's recent Further Notice of Proposed Rulemaking ("Further Notice") in the above-captioned proceeding.[1] We urge the Commission to engage in comprehensive, fundamental, and concurrent reform of the Commission's intercarrier compensation, network interconnection, and universal service rules by adopting the ICF Plan for reform[2] without modification and without delay.

To date, ICF has submitted two major *ex parte* filings that offer detailed and comprehensive descriptions and analyses of the ICF Plan. Those filings are attached as appendices.[3] In these comments, we respond to the Commission's observations and

---

[1] *Developing a Unified Intercarrier Compensation Regime*, CC Docket No. 01-92, Notice of Proposed Rulemaking, FCC 05-33, 20 FCC Rcd 4685 (2005) ("Further Notice").

[2] *Developing a Unified Intercarrier Compensation Regime*, CC Docket No. 01-92, Letter from Gary M. Epstein and Richard R. Cameron to Marlene H. Dortch (filed Nov. 5, 2004) (the "ICF Plan" or "the Plan").

[3] Attached as Appendices are the following: Appendix A is a comprehensive legal analysis, expanding on the discussion *infra* at Part III, explaining the Commission's jurisdictional and substantive authority to implement the ICF Plan in its entirety; Appendix B is a model demonstrating the results of the Plan; Appendix C is a summary of the Plan highlighting the Plan's major components; Appendix D is the

questions in its March 3, 2005, Further Notice of Proposed Rulemaking, and demonstrate why the ICF Plan is the best proposal to guide America's intercarrier compensation system into the future.

INTRODUCTION AND SUMMARY

We live in a new telecommunications world in which recent strides in technology have fundamentally altered the landscape. In particular, wireless and VOIP services are becoming immensely popular and are revolutionizing how millions of Americans communicate. With these two services growing exponentially, and new technologies on the horizon, the telecommunications industry stands on the threshold of a new era of unprecedented opportunities for innovation and growth.

Yet, outdated regulations are robbing consumers of the full benefits of these advances. The access charge and reciprocal compensation systems were developed years ago and implemented piecemeal in response to discrete regulatory needs. The Commission and the states have struggled—often on a technology-by-technology basis—to determine when access charges apply, when reciprocal compensation applies, and when or if there are circumstances where neither applies. Ad hoc implementation has produced compensation rules that "apply different cost methodologies to similar services based on traditional regulatory distinctions that may have no bearing on the cost of providing service."[4] The systems' increasingly arbitrary regulatory distinctions have created uncertainty that hobbles the widespread deployment of broadband and suppresses incentives to develop new technologies.

---

actual ICF Plan; and Appendix E is a series of diagrams depicting the interconnection arrangements under the current system, and under the ICF Plan.

[4] Further Notice ¶ 5

The current compensation systems also guarantee massive transaction costs from the continual, intrusive economic regulation necessary to establish and enforce the distinctions between the current intercarrier compensation systems. Radically different obligations—including whether a carrier must pay or be paid by another carrier—can turn on the regulatory "boxes" in which carriers and their traffic are classified. As a result, providers spend millions of dollars each year disputing which rates apply to specific traffic, and the amount and structure of those rates. By at least one estimate, industry participants now spend more money each year litigating disputes than they do on research and development of new or improved products.[5]

Rural customers are particularly vulnerable to the irrational distinctions embedded in the current intercarrier compensation regime because the vast majority of the carriers that serve them remain highly dependent on a revenue stream—high access charges—that the market is rejecting. A substantial amount of wireless traffic lies outside the access charge system, and competition for high-volume and business customers that pay above-cost rates is eroding wireline access charges as a source of revenue, thereby reducing any implicit support for universal service embedded in those charges. Moreover, the revenue sources for the system's explicit universal service contributions are also declining as customers shift to service substitutes that are not subject to the universal service contribution obligations placed on interstate telecommunications.

---

[5] Dr. Charles H. Ferguson, Brookings Institution, "Broadband Policy and the Future of American Information Technology," Testimony Before the Senate Commerce Committee, Apr. 28, 2004.

Any effort to reform the intercarrier compensation system must recognize that a paradigm shift has occurred. It is not just that the current rules were created in a world that did not have to contemplate how to compensate a carrier when a VOIP user in Manhattan with a California area code calls a wireless subscriber based in Louisiana who is roaming in Brooklyn. It is also that consumers no longer view their telecommunications services (if they ever did) from the regulator's legacy perspective in which the calling party is the sole beneficiary of a call. With technological advances that allow called parties to screen out any unwanted calls, consumers increasingly view their connections to the network as allowing them to send *and receive* communications, and are willing to pay for this capability.[6] Consumers also no longer see the local/long-distance distinction as fundamental, or believe that piece-by-piece access to the network is the preferred way to buy service. They increasingly demand services that sell comprehensive connectivity through geographically unrestricted calling plans with unlimited quantity, rather than incremental, minute-based access to the network.

The Commission, state regulators, and every sector of the industry have long recognized the need for comprehensive reform.[7] It is now time to act. Of course, today's regulatory framework may eventually collapse under its own weight or be rendered irrelevant by new technologies. But the Commission cannot simply stand at the sidelines and wait for that to happen. Every day, this broken system fosters massive economic waste and inhibits innovation, harming consumers and producers alike.

---

[6] *See, e.g.*, Further Notice, Appendix C at 100-101.

[7] Further Notice Part 2(a), ¶¶ 15-17 (citing the comments of numerous industry members, coalitions, and regulators urging comprehensive reform).

With these concerns in mind, the ICF assembled more than two years ago to design a balanced plan for comprehensive reform. Its members—drawn from every sector of the industry—engaged in a rigorous, deliberative, eighteen-month process to create a global solution to the interrelated network interconnection and intercarrier compensation issues pending before the Commission. Over time, some participants dropped out, while others joined or rejoined, but all offered their diverse perspectives.[8] The ICF Plan incorporates input from all these participants. It is a balanced plan that does not tilt in favor of any one industry segment.

The ICF Plan solves the problems in the current system by proposing a comprehensive framework for direct, end-user payments that fosters competition, empowers consumers, and encourages the development of new services and technologies. The Plan establishes easily administered, competitively neutral rules that will promote efficient competition and create stability in the market, with minimal regulatory oversight. It also satisfies the unique needs of rural customers and carriers, without sacrificing the efficiency or sustainability needed for successful reform. The Plan reforms universal service, creating a stable and fair contribution methodology based on numbers and connections and explicit support mechanisms to replace the current unsustainable reliance on implicit support. Finally, the ICF Plan is authorized by existing law.

---

[8] The current ICF members include AT&T Corp.; General Communications, Inc.; Global Crossing North America Inc.; Iowa Telecom; Level 3 Communications LLC; MCI, Inc.; SBC Communications Inc.; Sprint Corporation; and Valor Telecommunications, LLC.

The ICF realized that carrier interconnection arrangements, and the rules and practices governing those arrangements, are inextricably intertwined with the rules for intercarrier compensation. The Plan thus creates neutral default rules to establish a uniform interconnection platform for all current and future technologies, eliminating the need for carriers to deploy separate interconnection networks for local exchange and interexchange traffic. It establishes the concept of network "Edges," which are specified points at which networks interconnect and transfer financial responsibility for traffic. Carriers are free to negotiate alternatives to these default rules, but in the absence of agreement, the rules ensure that calls will go through. The Plan creates incentives for carriers to engineer their networks based on engineering principles rather than intercarrier compensation rules.

The ICF also recognized the urgency of implementing uniform intercarrier compensation rules. Within three years, the ICF Plan prescribes a single termination rate for all traffic, whether it is today considered access or non-access traffic. Termination rates are then eliminated entirely over a transition period, shifting cost recovery to end users and eradicating the terminating monopoly problem and attendant regulatory quagmire. Crucially, the Plan tackles both interstate and intrastate compensation rules. No plan can succeed unless it replaces the present system in both jurisdictions. The ICF Plan's uniformity—across jurisdictions and among carrier rate levels and rate structures—will create certainty in the industry that will promote competition and eliminate opportunities to exploit regulatory disparities.

At the same time, the ICF Plan recognizes the special needs of rural customers and carriers, and thus contains substantial protections for rural America,

including a more measured transition for rural customers and a continuing optional terminating transport revenue stream for rural carriers. The Plan also revitalizes universal service, replacing the implicit support in today's intercarrier compensation scheme with two new explicit support mechanisms. ICF's approach stabilizes and broadens the universal service funding base, and modifies distribution to enhance incentives for investment in technologies and services that will benefit rural consumers.

Alone among those proposing intercarrier compensation reform, the ICF has created a model to show the effects of its Plan at each step of the transition it proposes on an aggregated, nationwide basis.[9] Among the key findings that this model reveals are:

- That the ICF Plan would create roughly $2.7 billion in explicit universal service support by replacing support that is implicit in intercarrier charges today and improving existing mechanisms;
- That roughly two-thirds of this support will flow to rural carriers;
- That, in the aggregate, large carriers will be required to seek recovery of over 80 percent of their current intercarrier compensation revenues from their own end users (to the extent the market allows them to do so), while the remainder is split roughly evenly between explicit universal service support and remaining intercarrier charges; and
- That the ICF Plan successfully addresses rural carriers' concerns by converting just over half of their current intercarrier compensation revenues to explicit universal service support, requiring them to seek recovery of only about one quarter of these current revenues from their own end users, and preserving the remaining quarter as a substantial continuing intercarrier compensation revenue stream.
- That the ICF Plan puts universal service funding on firm footing for the future by creating a stable funding base that relies upon affordable contribution obligations.

---

[9] See Model, Appendix B.

None of the competing plans offer such fundamental or concrete reform, and none are proposals that can be implemented today.[10] Many are simply recitations of principles, and all lack the rigorous analyses necessary to assess their viability, as well as the detail and specification necessary to craft workable implementing regulations. Those that provide some detail seek in one form or another to shore up the flawed legacy system in an effort to avoid making tough choices to rationalize the framework governing the exchange of traffic between service providers in an increasingly competitive marketplace. These plans would perpetuate the need for endless regulatory proceedings to determine costs and cost structures, and thereafter to set rates, based on obsolete notions about the state of technology and competition. They continue, for example, to engage in the exercise of deciding whether VOIP calls are local or long-distance, or whether they are "information services," without recognizing that there is no good reason to have a compensation system that raises these questions in the first place.[11]

The competing plans also fail in other major areas. None adequately addresses disparities in *intra*state compensation, which are perhaps the most significant disparities in the current system. The few competing plans that even address intrastate compensation inexplicably do so *without* ensuring consistency of rates among carriers within the same state, or from one state to the next, or between the state and federal jurisdictions. Moreover, the other plans pay scant attention to the disparities in network

---

[10] In these comments, we analyze the various competing proposals referenced in the Commission's March 3, 2005 Further Notice. We will address any subsequently submitted proposals, or changes to existing proposals, in our reply.

[11] Nuechterlein & Weiser, Digital Crossroads: American Telecommunications Policy in the Internet Age 305 (2005).

interconnection rules that sow confusion and inhibit competition.[12] Because it is impossible to meaningfully determine compensation obligations without knowing where and how carriers interconnect, many of the competing proposals leave uncertainty in the marketplace that will provoke ongoing and extensive disputes among carriers.

The competing proposals also fail to ensure stable funding for universal service. Several maintain the implicit support system that has undermined universal service, and they impede carriers' ability to offer services at reasonable rates to rural and high-cost customers. Others offer essentially no plan at all to preserve universal service, ignoring the unsustainability of the current, revenue-based contribution system. Finally, several of the proposals for addressing universal service are patently unlawful.

* * * * *

At bottom, this is a proceeding about how carriers should recover the costs of generating and terminating calls that pass through more than one network—especially the switch and loop costs associated with the origination and termination functions. End users as a group inevitably will pay for those costs one way or another. They can continue to pay the costs inefficiently and indirectly through shifting support and unpredictable rates subject to perpetual regulatory intervention. Or, alternatively, they can pay the costs efficiently to their own carriers supplying their network connection, with rates established by a competitive market, with a predictable universal service safety net.

---

[12] *Cf.* Further Notice ¶ 34 ("any proposal for reform of compensation mechanisms should address the impact of such change on network interconnection rules").

The ICF's proposal maps out the latter course. It is a pragmatic and commercially reasonable solution that, if adopted, will greatly benefit the public by promoting efficient competition and facilitating innovation with minimal ongoing regulation. We urge the Commission to implement the ICF Plan in its entirety.

DISCUSSION

I. The Goals Of Reform

The ICF Plan is the only proposal that satisfies all of the Commission's goals for reform. The ICF Plan will:

- Create uniformity through an approach that is "competitively and technologically neutral," "accommodate[s] continuing changes in the marketplace," and "provides regulatory certainty."[13] The Commission has urged that "similar types of traffic should be subject to similar rules," and "similar types of functions should be subject to similar cost recovery."[14] Moreover, the Commission has made clear that it is "interested in not only similar *rates* for similar functions, but also in a regime that would *apply* these rates in a uniform manner for all traffic."[15]
- Promote market-oriented solutions by "promot[ing] economic efficiency" and "facilities-based competition in the marketplace," "limit[ing] … the

---

[13] Further Notice ¶ 33.

[14] *Id.*

[15] *Id.*

need for regulatory intervention," and relying on negotiated agreements where possible.[16]

- Preserve and enhance universal service as part of the development of any new intercarrier compensation regime.[17]
- Address the special concerns of rural consumers and carriers by being "particularly sensitive to the interests of rural and high-cost communities" and ensuring "that any reform of compensation mechanisms does not jeopardize the ability of rural consumers to receive service at reasonable rates."[18]

A. Create Uniformity

The current rules create competitive distortions that harm consumers, while arbitrarily favoring or disfavoring carriers on an ad hoc basis. For example, calls terminating to a LEC customer may be governed by no fewer than five different rates depending on the carrier or location of the calling party, even though each call uses the same switch and loop, and the carriers' ability to recover compensation will vary depending on their regulatory classification. The compensation rules differentiate arbitrarily between "intrastate" and "interstate"; local and interexchange; intraLATA and interLATA; intraMTA and interMTA; and wireline/fixed wireless and mobile wireless. Inconsistencies among interconnection rules create uncertainty even on the fundamental question of which carrier bears financial responsibility for the carriage of traffic at any

---

[16] *Id.* ¶¶ 31, 33.

[17] *Id.* ¶ 31.

[18] *Id.* ¶ 32.

given point in the network. Each of these regulatory disparities creates opportunities for unnecessary network and operational expense, generates ongoing disputes among carriers, and skews the economic incentives of carriers to provide consumers with services they demand, such as flat-rated, nationwide calling.

The Commission has recognized the need "to replace the existing patchwork of intercarrier compensation rules with a unified approach."[19] A uniform regime must apply the same rate consistently across all carriers, technologies, and services, unify interstate and intrastate compensation systems, and rationalize network interconnection rules, ending "artificial regulatory distinctions."[20] Such an approach will promote consumer welfare by encouraging true competition on the merits rather than rewarding efforts to game the system.

It is also important that "new rules accommodate continuing change in the marketplace and do not distort the opportunity for carriers using different and novel technologies to compete for customers."[21] Among the blossoming technologies are wholly IP-based services, *i.e.*, IP-enabled services that do not interconnect with circuit-switched networks. These IP-based services have developed flat-rated pricing structures in which end users purchase two-way Internet connectivity that may be symmetric or asymmetric, and may be of differing capacities, but it is the customer that chooses the nature of that connectivity. Under such pricing structures, cost recovery is direct from the user and scaled in relation to the user's anticipated two-way uses, both for receiving

---

[19] Further Notice ¶ 3.

[20] Further Notice ¶ 33.

[21] *Id*.

and sending communications. This approach in many ways is inconsistent with the legacy calling-party's-network-pays ("CPNP")-based rules, since under the access charge regime, recovery of the costs for the end user's network connectivity is split between the providers of retail network connectivity (*e.g.*, LECs), and the providers of applications that use that connectivity (*e.g.*, IXCs). Compensation reform must include uniform rules that address and reconcile this inconsistency while enabling IP services to flourish.

B. Promote Market-Oriented Solutions

Any cost recovery system must grapple with two related phenomena that enable carriers to charge supracompetitive rates for handling other carriers' traffic. The first of these is the "terminating access monopoly"—the fact that, even in otherwise competitive markets, a terminating carrier has both the incentive and the ability to charge the calling party's carrier (whether a LEC or an IXC) above-cost rates for call termination. This phenomenon arises because the terminating carrier controls the only line associated with a given telephone number and typically lacks any direct relationship with, and thus any accountability to, the calling party who triggers the termination charges by placing a call to that number.[22]

---

[22] *In the Matter of Access Charge Reform; Reform of Access Charges Imposed by Competitive Local Exchange Carriers*, 16 FCC Rcd. 9923, 9934-5 ¶ 28 (2001) ("*CLEC Access Charge Order*") ("The Commission has previously noted the unique difficulties presented by the case of terminating access, where the called party is the one that chooses the access provider, but it neither pays for terminating access service, nor does it pay for, or choose to place, the call. It further complicates the case of terminating access that an IXC may have no prior relationship with a CLEC, but may incur access charges simply for delivering a call to the access provider's customer. In these circumstances, providers of terminating access may be particularly insulated from the effects of competition in the market for access services. The party that actually chooses the terminating access provider does not also pay the provider's access charges and therefore has no incentive to select a provider with low rates. Indeed, end users may have the incentive to choose a CLEC with the

A second, similar problem can arise on the originating end of a long distance call handled by an IXC that, while serving the calling party, is unaffiliated with the calling party's LEC.[23] Theoretically, in unregulated competitive markets, there should be no such problem, because the IXC could pass any above-cost origination charge back to the particular end user who triggers that charge, and that end user could then hold its own LEC accountable for imposing it in the first place. But the rate averaging requirements of section 254(g) frustrate this market dynamic by prohibiting IXCs from passing through higher rates to the specific customers served by the LECs that impose high access charges. The current calling-party's-network-pays ("CPNP") regimes[24] therefore require regulators continually to regulate the origination and

---

highest access rates because greater access revenues likely permit CLECs to offer lower rates to their end users.") (notes omitted).

[23] *Id*. at 9935-9936 ¶ 31 ("On further consideration, it appears that the CLECs' ability to impose excessive access charges is attributable to two separate factors. First, although the end user chooses her access provider, she does not pay that provider's access charges. Rather, the access charges are paid by the caller's IXC, which has little practical means of affecting the caller's choice of access provider (and even less opportunity to affect the called party's choice of provider) and thus cannot easily avoid the expensive ones. Second, the Commission has interpreted section 254(g) to require IXCs geographically to average their rates and thereby to spread the cost of both originating and terminating access over all their end users. Consequently, IXCs have little or no ability to create incentives for their customers to choose CLECs with low access charges. Since the IXCs are effectively unable either to pass through access charges to their end users or to create other incentives for end users to choose LECs with low access rates, the party causing the costs--the end user that chooses the high-priced LEC--has no incentive to minimize costs. Accordingly, CLECs can impose high access rates without creating the incentive for the end user to shop for a lower-priced access provider.") (notes omitted).

[24] We use the term "CPNP" to include both access charge regimes and reciprocal compensation schemes in which a positive charge is assessed for termination, but not for origination.

termination rates that may be charged, because the market has not provided an effective check on these rates.[25]

In a theoretical world of zero transaction costs and perfect information, this regulatory approach might be effective. But in the real world, neither condition exists. CPNP requires regulators to delve intrusively into the details of telecommunications networks with diverse technologies and services to identify, evaluate, and perpetually reevaluate costs and cost structures. The absence of consensus over the appropriate cost base and structure, information limitations, and evolving technologies make it implausible that regulators can establish objectively "correct" rates in *any* CPNP system. And when the regulators' cost structures and rates inevitably fail to match up with the "actual" cost structure and level, their regulatory intervention creates market distortions. Moreover, the endless rate proceedings themselves create massive transaction costs and harmful uncertainty. These problems afflict not only the current CPNP-based system, but also all of the proposals in this proceeding that retain a CPNP model.

A market-based solution would rationalize the treatment of all technologies and reduce the need for burdensome regulatory and judicial proceedings that create uncertainty and inhibit innovation. By requiring carriers to recover the costs of providing network connectivity from their end user customers, carriers would be required to develop

---

[25] *Id*. at 9336 ¶32 ("We now acknowledge that the market for access services does not appear to be *structured* in a manner that allows competition to discipline rates"), ¶ 34 ("we conclude that some action is necessary to prevent CLECs from exploiting the market power in the rates that they tariff for switched access services").

end user rates that more accurately reflect the level and structure of the underlying costs, while at the same time responding more efficiently to changes in consumer preferences.[26]

C. Preserve and Enhance Universal Service

Uniformity and economic efficiency are not the only goals for reform of the intercarrier compensation system. As the Commission emphasized in its Further Notice, universal service has played a crucial role in addressing the needs of rural and high cost communities, and our nation has made a fundamental commitment to ensuring that *all communities* can receive service at reasonable rates.[27] Universal service also generates network effects that benefit all subscribers nationwide. A goal for reform must be to preserve and enhance universal service without distorting the marketplace while ensuring a long-term, stable funding source.

Any such reform must eliminate current regulatory distinctions that discriminate illogically among service providers and artificially limit the pool of contributors to universal service. For example: (1) while DSL providers are now required to contribute to universal service, providers of comparable cable modem services are exempt; and (2) while providers of interstate circuit-switched telephony are now required to contribute to universal service, VOIP providers today largely are not required to make direct contributions. Universal service funding should not depend on arbitrary classifications that unfairly burden certain carriers and provide others an unwarranted economic advantage in the marketplace.

---

[26] *See* Further Notice, Appendix C at 104.

[27] Further Notice ¶ 32.

Reform is also needed to address the erosion of implicit support in the current system. In the Telecommunications Act of 1996 ("1996 Act"), Congress mandated that universal service support "should be explicit,"[28] recognizing, as the Commission itself has acknowledged, that implicit support is not sustainable in today's competitive marketplace.[29] Nevertheless, state PUCs and the Commission continue to rely heavily on implicit support to fund universal service and keep basic local rates low. LECs and IXCs are still subject to geographic rate averaging rules; business rates and, in many areas, subscriber line charges are still significantly above those paid by residential customers; and LECs still recover a substantial portion of their network costs through per-minute charges to other carriers.[30] As the high-volume and business customers that pay implicit support migrate to services and technologies that do not pay such charges, rates for the remaining customers rise, and carriers have fewer resources to invest in the network.

Simply eliminating implicit support and arbitrary contribution classifications, however, is not enough. A true commitment to universal service requires securing a long-term, stable funding source. A plan should create an explicit funding mechanism that will ensure reasonable end-user rates for all users. Effective reform will protect all Americans' access to affordable telecommunications and information services.

---

[28] 47 U.S.C. § 254(e).

[29] *E.g., Federal-State Joint Board on Universal Service*, Report and Order, 12 FCC Rcd 8776, 8787 (1997), at para. 17 (subsequent history omitted).

[30] Further Notice ¶¶ 23-24.

D. Address The Concerns Of Rural Customers And Carriers

Rural carriers have special concerns arising from the costs and operational complexities of serving rural communities. Although rural carriers and the communities they serve are extremely diverse, rural providers face common challenges associated with offering a panoply of telecommunications services at reasonable rates.

The erosion of implicit support coupled with the rate averaging and rate integration requirements of the 1996 Act threaten rural areas with a potential for dramatically higher rates and fewer service providers, especially in the toll market. AT&T has already announced its withdrawal from the consumer, circuit-switched long distance market.[31] MCI has also cut back substantially on its efforts to attract new individual consumers.[32] While these withdrawals are national, they have a greater proportionate impact on rural customers. Because rural local exchange carriers charge substantially higher access rates than the national average, without the presence of national carriers to offer nationwide averaged retail rates, the long distance rates offered to rural consumers by any regional IXC serving predominantly rural consumers can be expected to rise to reflect these higher rural LEC access rates. These higher prices in turn

---

[31] *See* Press Release, AT&T Corp., AT&T Announces Second-Quarter 2004 Earnings, Company to Stop Investing in Traditional Consumer Services; Concentrate Efforts on Business Markets, (July 22, 2004) *available at* http://www.att.com/news/2004/07/22-13163 (announcing that "AT&T will no longer be competing for residential local and standalone long distance (LD) customers").

[32] *See* MCI/Verizon Application for Transfer of Control, Public Interest Statement, p. 35 (noting that MCI has a "diminishing legacy customer base, and it has cut back substantially on any efforts to attract new mass-market customers") *available at* http://gullfoss2.fcc.gov/prod/ecfs/retrieve.cgi?native_or_pdf=pdf&id_document=6517495215.

depress demand and stimulate migration to wireless and VOIP alternatives, further eroding access minutes on which rural LECs rely for revenue.

Today's patchwork system also harms rural consumers by creating incentives for rural carriers to carve out artificially small local calling areas, which force consumers to make a greater proportion of their calls at toll rates designed to generate additional revenue. Further, the upgraded broadband network facilities some rural carriers have deployed threaten to undermine the same carriers' access and toll revenues through VOIP competition enabled by the carriers' broadband investment.

A plan for reforming the intercarrier compensation system should promote robust competition in rural markets, and create incentives for rural carriers to invest in new technologies. New compensation rules should also encourage broadband deployment in rural communities without loss of revenue and ensure that rural customers can obtain a spectrum of telecommunications services comparable to those available in urban areas, at comparable rates.[33]

* * * * *

It is crucial for reform to achieve *all* these goals because many of the problems in the current regime arise from the disparity among its different elements. A plan that does not address intrastate compensation, for example, does not unify network

---

[33] In addition, any reform effort must also recognize the unique nature of the Alaska market. There are no LATAs in Alaska, and the entire state is one MTA. Most interexchange traffic is carried between LECs by either GCI or AT&T/Alascom over costly satellite facilities. Broadband services to the over 227 rural communities must travel by satellite in most cases, making its transit more costly than if fiber was available. The clarity and uniformity provided by the ICF plan, coupled with expansion of the contribution base to include all telecommunications, would reduce the risks of investment in rural areas.

connection rules, or does not create stable, explicit funding for universal service, would leave intractable problems in place and ultimately undermine the proposed solution.

II. The ICF Plan Creates A Comprehensive Solution That Achieves All The Commission's Objectives

In contrast to the other proposals, the ICF Plan is a comprehensive solution that will achieve *all* of the Commission's objectives for reform.[34] The Plan achieves uniformity by establishing clear interconnection obligations and compensation rules that establish a platform for competition and innovation. It uses market-based solutions—including a system of direct, market-based cost recovery—to promote consumer choice and welfare, and provide stability and certainty to the industry. It strengthens universal service with a robust, expansive program of explicit contributions and distributions. And it addresses the special concerns of rural customers.

A. The ICF Plan Creates Uniform, Neutral Rules For Network Interconnection And Intercarrier Compensation

When two networks interconnect, it is not inherently clear where they should interconnect or whether (or what) compensation should flow between them. But the answers to these questions have a profound impact on the telecommunications market, and the consequences of getting them wrong are grave.

1. Uniform Network Interconnection

It is simply not possible to define compensation obligations without also defining where and how carriers interconnect and the length and scope of the transport

---

[34] *See* Further Notice ¶¶ 29-36 (recognizing goals of promoting economic efficiency, creating competition in the marketplace, preserving universal service, achieving technological and competitive neutrality, reducing regulatory intervention, addressing the impact of interconnection rules, and ensuring the Commission's legal authority to implement changes).

that each carrier is obligated to provide. Network interconnection rules are a primary factor in determining the costs a carrier must incur to receive traffic from and deliver traffic to other carriers. Any lack of uniformity in these rules, therefore, has profound economic impacts that impede efficient competition and sap consumer welfare.

Yet only the ICF Plan offers a proposal to establish clear, explicit and uniform default technical and financial rules to govern the efficient interconnection of diverse carrier networks.[35] These rules necessarily are quite detailed, to provide clear guidance to all parties and avoid the continuous litigation that has occurred under the existing rules. The Commission should not confuse this detail with complexity; the ICF's rules are simple and neutral, and will create a competitive environment that will facilitate and reward innovation.

The ICF's rules are based on network "Edges," which are designated points at which a carrier must accept financial responsibility for carrying traffic it receives from other carriers.[36] When a call originates and terminates on different networks, the carrier sending the traffic must bear the financial responsibility for delivering the call to the Edge the recipient carrier has designated. This responsibility is unaffected by any decision of the carriers to interconnect physically at a different point.[37]

Edges are entirely neutral as to both technologies and services. The Edge rules are based on a classification of three categories of networks—hierarchical, non-

---

[35] These rules would take effect in Year 3, to give carriers time to negotiate alternatives and plan for implementation of the default rules if such negotiations fail.

[36] *See* Diagrams, attached at Appendix E.

[37] Thus, carrier rights and responsibilities under Section 251(c)(2)(B), which authorizes interconnection with an incumbent LEC at "any technically feasible point within the carrier's network," are unaffected. 47 U.S.C. § 251(c)(2)(B).

hierarchical, and rural. These categories, pointedly, are *not* based on particular types of technologies or services, but instead apply to all providers depending on the structure of the network each provider chooses to employ. The Edge system thus creates a uniform, predictable basis for interconnecting all traffic. It creates a platform for innovation, unhampered by arbitrary distinctions that discourage implementation of new technologies.

The Edge concept effects clear, bright-line default rules, while allowing carriers to depart from these rules by mutual agreement.[38] The Edge concept's simplicity and predictability will permit carriers efficiently to negotiate different network interconnection arrangements. And at the same time, its bright-line default rules will permit carriers to interconnect without regulatory involvement when they are unable to reach an alternative financial responsibility agreement.

The Edge proposal was developed to balance several important goals, and without sacrificing the value of uniformity fully accommodates the different types of service providers who have different types of networks. For example, the ICF recognized that large, established carriers typically have hierarchical networks, and that new entrants usually do not have extensive facilities-based networks with which to interconnect with other carriers at many locations. Therefore, the ICF Plan establishes Edge locations that are fair to both of these very different kinds of networks. The ICF Plan also achieves technological neutrality by recognizing the differences between wireline circuit-switched

---

[38] These arrangements are similar to arrangements freely entered into between Internet backbone providers. Because they developed in the absence of regulation, and in the absence of market power by any one firm, the arrangements between Internet backbone providers can be viewed as a model to be emulated.

networks, wireless networks, and IP-backbone networks and separately defining legitimate functional Edge locations applicable to each type of network. And the ICF Plan is neutral as to carrier size: it recognizes that the appropriate geographic area for network interconnection is generally the LATA, and that it would be unfair for a national carrier to be permitted to establish a single nationwide point of interconnection, to which regional carriers would be required to transport traffic over long distances.

The ICF Plan also accommodates differences between rural and non-rural carriers. The ICF recognizes that rural carriers face unique demands that should be addressed—but without compromising the other important public policy goals the ICF plan will advance. For example, the ICF Plan provides rural carriers the option of compensation for terminating interconnection transport links—but it also requires those carriers to permit interconnection of other carriers that may compete to provide those transport links. It relieves rural carriers from having to provide transport to non-rural carriers that do not have a physical presence within the rural carrier's territory. And it recognizes that carriers rely heavily on transit service to exchange traffic with rural carriers, and therefore includes rules ensuring that carriers continue to have transit available at reasonable rates.

In addition, the ICF Plan provides solutions to accommodate the efficient exchange of differing amounts of traffic over short or long distances. As noted, it contains rules requiring that transit service be made available at reasonable rates, and it requires all carriers to provide options for physical interconnection to any requesting carrier so interconnecting carriers have choices enabling lower interconnection costs. At the same time, the ICF Plan contains measures to ensure the preservation of network

reliability in recognition of the importance of ensuring that network interconnection rules not concentrate traffic to so few points that network reliability becomes compromised. The ICF Plan addresses this by adding rules that specify that network interconnection should be accomplished within each LATA, while permitting the growth of a competitive market for transit.

Taken all together, the default network interconnection rules in the ICF Plan provide any two carriers comparable negotiating leverage, creating an environment that will promote mutually agreed to arrangements for both direct and indirect interconnection rather than litigation. The Plan facilitates efficient interconnection on an indirect basis by detailing the responsibilities of both transit providers and transit customers to avoid gaming. The Plan would also provide certainty about the framework for the provision of transiting. Transit providers are protected from abuses of their service and exhaustion of transit tandem switching capacity. And the ICF plan promotes the provision of transiting by incumbent carriers as well as the entry of competitors to the transit market.

Moreover, because the ICF's network interconnection rules were developed by a diverse group of carriers representing a broad cross-section of the industry, the ICF Plan has already anticipated ways in which the rules could be gamed or abused and has included safeguards against such disputes. For example, the Plan contains a number of rules that prevent the inappropriate proliferation of Edges; the rules strike a careful balance so as not to create undue incentives or disincentives to create Edges. The ICF Plan also permits six different default methods of network interconnection in order to encourage efficient arrangements, allow different types of

carriers to lower their interconnection costs, and prevent carriers from extending the termination monopoly into interconnection transport and transit markets. Thus, every Edge owner is required to provide interconnection of fiber optic and electrical cabling and must also offer two additional methods from a list of four, and ILECs will continue to provide interconnection at any technically feasible point on their network pursuant to section 251(c)(2) of the Act (although the ILEC is not required to provide discounted interconnection transport to such locations that are not also ILEC edges).

Finally, the ICF Plan provides for a smooth transition from today's CPNP interconnection architecture to the Edge architecture. Any plan that would encourage or require massive network rearrangements to implement a new network interconnection regime would fail the public interest. The ICF avoids this first by allowing carriers to mutually agree to leave physical interconnection arrangements in place and devise financial solutions in lieu of physical network reconfiguration. Moreover, the ICF Plan establishes default values for pre-existing interconnection facilities to support carriers' effort to leave pre-existing interconnection in place until a more efficient arrangement is developed and agreed to.

2. Uniform Intercarrier Compensation

A central question in this proceeding is who should pay for costs incurred by carriers in originating calls from and terminating calls to one of their end users subscribers, when those calls are also handled by other networks. While the intercarrier charges will inevitably be passed on to end users in one form or another, this can be done efficiently and directly or inefficiently and indirectly. As explained above, the current CPNP system has carriers paying each other in inconsistent and often arbitrarily different ways. The system ensures unending regulation because of the terminating monopoly problem, which causes

significant transaction costs and reduces consumer choice and welfare. It also presumes that only calling parties benefit from calls.

The ICF Plan replaces the CPNP system with a uniform system under which origination and termination intercarrier charges are unified and then eliminated, and the end user purchases a two-way connection to the network that allows her to make calls to and receive calls from any carrier's network. The Plan creates a transition to a regime in which carriers substantially recover their own costs from their own customers in the form of SLCs and, where necessary to ensure that rates are affordable and reasonably comparable, universal service. By moving to a uniform bill-and-keep approach, the Plan eliminates the legacy system's irrelevant distinctions between local and toll calls,[39] and abolishes the two disparate systems of reciprocal compensation and access that shift costs from certain customers to others. The Plan allows all terminating carriers, regardless of technology, to recover costs directly from end users without having to depend on uncertain regulations. The Plan also includes uniform regulatory treatment of circuit-switched services and packet-switched services, thereby lessening the pressure for economic regulation of VOIP.

The Plan envisions that the end user's carrier will recover its costs at the market rate for that connection. In this way, the ICF Plan achieves neutrality among carriers and traffic types, and minimizes transaction costs, by replacing regulated pricing among carriers with competitive market pricing to the end user. Further, by replacing regulated intercarrier charges with capped end-user fees and other new explicit funding, the ICF Plan

---

[39] CRTCs will have the option to take terminating transport rates to an average of up to $0.0095 per terminating minute.

also permits competition to discipline telecommunications markets in lieu of regulatory intervention, offering the Commission the opportunity, for the first time, to achieve the deregulatory goals of the 1996 Act.

The ICF Plan thus resolves the tension between Internet pricing and legacy pricing of end user network connections by transitioning the legacy pricing model to one that is consistent with the system used by the Internet. Under the ICF Plan, the end user selects and pays the entire cost of her connectivity, save what is paid by the Universal Service Fund to ensure affordable and reasonably comparable rates.[40] Unlike the legacy access model, the ICF Plan does not rely on a portion of those costs being recovered from other application providers that traverse the end user's two-way network connection.

The Plan does retain some intercarrier charges, but only for facilities that have the potential to be provided on a competitive basis once the end user has selected her network connectivity provider, such as interconnection transport or tandem transiting services. It places charges for last-mile facilities, such as the loop and local switch, on the end user, who ultimately has the power to choose providers and services that efficiently meet his needs. And it allows carriers to replace lost revenue from today's intercarrier charges by increasing the SLC caps and creating new federal universal service support. Carriers can also earn revenue where other carriers elect to use their interconnection transport and transiting

---

[40] Of course, if the end user connection provider voluntarily creates a loss leader or otherwise structures its packages to reduce the end user charge, it may do so.

services, revenue from a transitional uniform termination charge, and terminating transport revenues for a Covered Rural Telephone Company ("CRTC") (*see infra* Part II.C).[41]

Although the default SLCs rise in measured increments, consumers should not see any significant increase in their overall telephone bills as a result of this restructuring. Most default SLCs will remain capped at $10.00 per month (*i.e.*, $3.50 above the current residential and single line business cap),[42] while CTRCs will retain a cap of $9.00 per month for rural consumers.[43] Caps, however, are not rates: while the SLC caps will increase, SLCs for many customers will not increase to the full extent permitted because enhanced competition, particularly from cable-telephony and wireless providers, will constrain carriers' ability to raise end-user prices. Thus, while increases in the SLC cap provide LECs a reasonable opportunity to recover their forgone intercarrier revenues, the market will ultimately decide how much they recover. In addition, toll expenditures will likely decline as local calling scopes expand and toll rate levels and structures adjust to reductions in intercarrier compensation.

---

[41] The ICF Plan defines a "Covered Rural Telephone Company" as "an ILEC that, as of July 1, 2005 . . . , (a) meets the definition of a "Rural Telephone Company" in Section 3(37) of the Communications Act of 1934, as amended, 47 U.S.C. § 153(37), and is not a Bell Operating Company or affiliate thereof, and, in such study areas ("COSAs"), serves fewer than one million access lines; or (b) qualifies as a two percent carrier under the criteria established in Section 251(f)(2) of the Communications Act, 47 U.S.C. § 251(f)(2) with a holding company average of fewer than 19 switched access end user common lines per square mile. A CRTC shall not be treated as a CRTC with respect to customers it serves outside its ILEC serving area." ICF Plan at 19.

[42] Beginning in Year 5, non-CRTC SLC caps are indexed for inflation.

[43] Subject to consumer protection safeguards, the Plan also provides increased price cap carrier pricing flexibility for price cap ILECs.

B. The ICF Plan Promotes Market-Based Solutions

The ICF Plan advances the deregulatory goals of the 1996 Act by establishing clear and uniform framework that will allow the system to operate without constant regulatory intervention.

In particular, the ICF Plan addresses the terminating monopoly problem and the current lack of an effective market-based check on originating access rates without requiring regulators perpetually to supervise origination and termination rates, and without forbearing from enforcement of Section 254(g). Rather, the Plan obligates carriers to recover their termination costs from their own end users, who, in a competitive marketplace, will be able to choose efficient providers. By aligning cost recovery with the party who has the ability to choose the provider, the Plan allows market forces to efficiently govern rates and drive them towards efficient levels. The Plan thus avoids the massive transaction costs and expensive litigation that arise from regulatory alternatives. Under the ICF approach, the market eliminates the burden that the Commission and state regulators have borne for decades.[44]

---

[44] In this respect, the ICF Plan is the natural conclusion of the process the Commission began when it created the SLC as a flat-rated charge on end-users for use of the local loop to originate and terminate traffic. *MTS and WATS Market Structure*, CC Docket No. 78-72, Phase I, Third Report and Order, FCC 82-579, 93 F.C.C.2d 241 (1983) (creating subscriber line charge), *modified*, 97 FCC 2d 682 (1983), *further modified*, 92 FCC 2d 834 (1984), *aff'd in principal part and remanded in part sub nom. NARUC v. FCC*, 737 F.2d 1095 (D.C. Cir. 1984), cert. denied, 469 US 1227 (1985); *Access Charge Reform*, CC Docket No. 96-262, First Report and Order, 12 FCC Rcd 15982, 16012-13 (1997), at ¶¶ 75-76 (raising non-primary residential and single line business SLC), *aff'd sub nom. Southwestern Bell Tel. Co. v. FCC*, 153 F3d 523 (8th Cir 1998); *Access Charge Reform*, Sixth Report and Order in CC Docket Nos. 96-262 and 94-1, Report and Order in CC Docket No. 99-249, Eleventh Report and Order in CC Docket No. 96-45, 15 FCC Rcd 12962 (2000) (CALLS Order) (increasing primary residential SLC for price cap carriers), *aff'd in relevant part sub nom. Texas Office of Public Utility Counsel v. FCC*, 265 F.3d 313 (5th Cir. 2001); *Multi-*

The Plan thus recognizes that the competitive market naturally produces efficient results when consumer payments are directly linked to consumer choices. The Plan promotes consumer welfare by enabling carriers to offer the services that consumers demand. Providers in a bill-and-keep system compete for customers based solely on differences like service quality and bundled packages that consumers desire, rather than based largely on strategies for shifting network costs on to other carriers, as they would under most of the competing plans. Providers will also have incentives to reduce their own costs of providing service to maximize the returns they receive from customers, further reducing economic waste.

The Commission notes that "bundled offerings and novel services blur traditional industry and regulatory distinctions among various types of services and service providers, making it increasingly difficult to enforce the existing compensation regimes."[45] The regulatory morass is steadily worsening, and under the current system the Commission will continually have to determine into which traditional classification it should squeeze the newest unclassifiable technology. The ICF Plan ends this problem, creating certainty so innovators will no longer wonder which set of rules will apply to their new technologies and services.

Association Group (MAG) Plan for Regulation of Interstate Services of Non-Price Cap Incumbent Local Exchange Carriers and Interexchange Carriers, Second Report and Order and Further Notice of Proposed Rulemaking in CC Docket No. 00-256 , Fifteenth Report and Order in CC Docket No. 96-45, Report and Order in CC Docket No. 98-77, Report and Order in CC Docket 98-166, 16 FCC Rcd 19613 (2001) (increasing residential SLC cap for rate-of-return carriers).

[45] Further Notice ¶ 21.

C. The ICF Plan Preserves And Ensures A Stable Funding Source For Universal Service

The ICF Plan tackles current Universal Service Fund contribution and distribution challenges while advancing the 1996 Act's mandate for preserving and fostering universal service.

On the contribution side, the ICF Plan creates a new, robust, sustainable contribution mechanism that will ensure the necessary funding in an equitable and nondiscriminatory manner. The Plan creates a new uniform universal service contribution methodology based on "units" applied to telephone numbers and high-capacity network connections. Each unique working telephone number is assessed one unit, and the Plan allows CMRS carriers, CRTCs, and CRTC competitors to phase this assessment in for additional numbers in a residential household account. Residential DSL, cable modem, and other high-speed, non-circuit-switched connections are also assessed one unit, harmonizing today's disparate treatment of DSL and cable modem services. For business connections, the Plan establishes a four-tiered system of assessments for non-switched, dedicated network connections ranging from one to 100 units depending on capacity.

The Plan thus significantly broadens the range of contributors and eliminates the current system's arbitrary exemptions from contribution obligations. In addition, its new contribution mechanism would eliminate the enormous administrative and compliance difficulties that regulators now face when seeking to apply current rules to carriers whose revenues from service packages do not break down neatly into legacy regulatory categories, such as "telecommunications services" versus "information services," and interstate versus intrastate services. Finally, the ICF Plan's contribution

mechanism relies on a base—working telephone numbers and network connections—that will be stable or growing for the foreseeable future, mitigating the problems created by today's spiraling percentage contribution factor. These reforms are critical. By Year 5, the ICF Plan replaces with explicit funding some $2.7 billion in implicit universal service support, yet its new funding mechanism keeps individual subscriber universal service contributions manageable, at roughly $1.31 per working telephone number.[46]

On the distribution side, the Plan eliminates the implicit support historically provided by disparate intercarrier compensation regimes, which were eroding anyway as a result of competition. In lieu of revenue from intercarrier compensation, the ICF Plan creates two new universal service mechanisms to provide explicit support for intercarrier compensation amounts otherwise not recoverable under the Plan's rate restructuring rules. One mechanism, known as the Intercarrier Compensation Recovery Mechanism ("ICRM"), provides support to BOCs and other non-CRTC ILECs. The other, the Transitional Network Recovery Mechanism ("TNRM"), applies to areas served by CRTCs. Price cap LECs can receive support from either mechanism, but on a per-line basis, meaning that support will vary directly with their line counts.

The primary difference between the two funding mechanisms is the extent of their availability to those competitive eligible telecommunications carriers ("CETCs") that today cannot collect access charges under tariff. The ICRM funding is available, on a per-eligible-line basis, to all CETCs. During a transitional period, the TNRM funding, by contrast, is only available to CETCs that would lose access charge revenues under the Plan. Because wireless carriers may not tariff switched access charges, the transitional

---

[46] *See* Model, Appendix B, at 1, 15.

restriction is intended to allow only wireline CETCs to receive support, on a per-eligible line basis.

Moreover, the Plan retains rate of return principles for ILECs that are currently regulated under rate of return regulations, so those RLECs will continue to have the opportunity fully to recover their costs, including their authorized rate of return, even if they lose lines. But unlike today, the per-line amount available to CETCs receiving TNRM support will not vary with such changes to the RLECs line counts, although it may increase or decrease in proportion to the applicable ILEC revenue requirement. The Plan calls for the FCC to review whether additional eligible carriers should receive support from the TNRM at the conclusion of the initial term of the ICF Plan, in 2013.[47]

The Plan thus strengthens support mechanisms and stabilizes funding sources that ensure reasonable rates for high-cost customers. By making explicit that support which is implicit in intercarrier compensation rates today, the ICF Plan fulfills the mandate of the 1996 Act[48] and preserves and enhances universal service support for the future.

---

[47] Further, the Plan makes several improvements to existing universal service support mechanisms, including the rural high cost loop support mechanism and the safety valve support mechanism. The Plan also provides an option for price cap CRTCs to elect to receive support under the non-rural, model-based high cost mechanism. Finally, the Plan provides that the existing per-line universal service support will remain portable to competitive eligible telecommunications carriers, subject again to the proviso that CETC per-line support should not grow simply because the number of ILEC access lines falls.

[48] *See* 47 U.S.C. § 254(b)(5) (requiring the Commission to ensure that there are "specific, predictable, and sufficient Federal and State mechanisms to preserve and advance universal service").

D. The ICF Plan Addresses The Special Concerns Of Rural Consumers And Carriers

Because of the high cost structures and implementation complexities confronted by rural carriers, rural consumers have traditionally faced the prospect of fewer services at higher prices. The ICF Plan includes specific provisions that address the special needs and circumstances of rural consumers. These steps will stabilize rural markets, preserve and enhance universal service, and facilitate the development of rural services reasonably comparable to those in urban areas, at reasonably comparable prices.

The ICF Plan maintains reasonable retail prices for rural consumers in several ways. *First*, the ICF Plan ensures affordable rural LEC end user rates by permitting CRTCs to maintain lower residential and single line business SLC caps than non-CRTCs. In doing so, the ICF Plan addresses rural carrier concerns surrounding the current disparity between rural and non-rural SLCs.

Second, the ICF Plan provides substantial new explicit universal service support for rural carriers. Indeed, of the roughly $2.7 billion in new explicit universal service support contemplated by the ICF Plan, over $1.7 billion—roughly two thirds—would flow to rural carriers.[49] This majority of this support—some $1.24 billion—is provided through the TNRM which, for an interim period of eight years, is available only to those carriers that would lose access charge revenue as a result of the implementation of the ICF Plan. The Plan's Safety Valve provisions promote investment in rural infrastructure by removing the one year waiting period and including upgrades in local switching facilities. In addition, the ICF Plan also removes the current caps on the

---

[49] *See* Model, Appendix B at 6.

federal high cost loop support fund, and eliminates the rule reducing high cost loop support for rural carrier study areas with over 200,000 access lines. These increases in support translate into lower charges for consumers, higher quality services, and greater ability for rural carriers to invest in new and improved infrastructure and services.

Third, the ICF Plan's network interconnection rules are explicitly designed to protect universal service in rural America by establishing modified default rules to apply to networks operated by a CRTC. A CRTC is not required to deliver traffic to an interconnecting carrier at a point outside of the contiguous portion of its study area where the traffic originates, except to reach another CRTC within the same LATA. In doing so, the ICF Plan ensures that, with limited exception, CRTCs will not be obligated to construct transport facilities outside of their local exchange service areas or purchase such transport capacity from other carriers. Further, the ICF Plan ensures, as a general matter, that CRTCs will not bear the cost of transiting traffic.

Fourth, the ICF Plan provides an important additional transport revenue stream for CRTCs by providing a framework for interconnecting carriers to discharge their Edge responsibilities by using CRTC terminating transport facilities to deliver traffic to CRTC edges within each contiguous portion of the CRTC's study area.[50] This interconnection scheme provides CRTCs substantial new revenue from inbound switched interconnection services, at up to $0.0095 per terminating minute on average within a holding company.[51] The ICF projects that this revenue stream will generate roughly $573

---

[50] CRTC terminating transport facilities provide connectivity between a meet point and the CRTC Edge.

[51] These rates can be averaged within a holding company to provide carriers with flexibility to account for mileage differences.

million annually for CRTCs, or roughly one quarter of today's interstate and intrastate access revenue.[52] Thus, the ICF Plan ensures that CRTCs retain three substantial and diverse revenue streams, just as they have today, and consequently will not solely rely on revenue from end user charges and universal service.

Fifth, the ICF Plan creates incentives for larger calling areas that will result in fewer high-cost toll bills for rural customers. For outbound calls, CRTCs need only transport calls their customers originate (other than calls destined for customers of other CRTC companies within the same LATA) to the boundary of the contiguous portion of their service territory where the call originated, allowing them to share the costs of originating traffic with connecting carriers. The ICF Plan thus allows the marketplace, rather than regulatory history, to determine local calling scopes and service areas.

Sixth, the Plan promotes investment in the development of new technologies and services for rural subscribers. By using rate-of-return principles to calculate universal service distribution for carriers currently governed by rate-of-return rules, the Plan ensures that rural carriers will have incentives to invest in their facilities and develop their broadband networks.

Seventh, the ICF Plan not only accommodates the rate integration goals of section 254(g), but, unlike today's system, preserves IXCs' incentives to continue serving rural customers at reasonable rates. The Plan eliminates disparities in originating access that, in a competitive market, put upward pressure on rural long distance rates and are causing some national IXCs to leave the rural markets altogether. The Plan abolishes the

---

[52] Model, Appendix B at 5.

implicit support that forces consumers in other areas to subsidize the costs of rural networks.

Taken together, these provisions reflect the Commission's commitment to rural consumers and carriers. The ICF Plan facilitates the development of new services, promotes carriers' ability to offer bundled packages consumers prefer, and ensures that rural customers will receive an array of telecommunications services at reasonable prices.

III. The ICF Plan Is Authorized By Existing Law

The two central legal issues before the Commission are its ability to implement a uniform regime that applies to both interstate and intrastate traffic,[53] and its ability to mandate reform based on bill-and-keep principles. The ICF's legal analysis of these two crucial points is set forth below, explaining why our Plan is uniquely within the Commission's jurisdictional and substantive authority to implement.

In addition, ICF has set forth in Appendix A additional legal bases for the Commission to implement the remaining components of the ICF Plan, including the Commission's authority to implement new universal service mechanisms, its authority to adopt the ICF's proposed universal service contribution methodology, its authority to adopt the ICF's network interconnection rules, and its authority to require the provision of transit and regulate the rates therefor.

---

[53] Further Notice, ¶¶ 63, 79-82 (recognizing that intercarrier compensation regime requires reform of intrastate access charges, and seeking comment on the Commission's legal authority to implement such reform).

A. The Commission Has Full Jurisdiction Under the Communications Act, as Amended by the 1996 Act, to Establish Uniform Intercarrier Compensation Rules for All Classes of Traffic

Section 201(b) of the Communications Act authorizes the Commission to "prescribe such rules and regulations as may be necessary in the public interest to carry out the provisions of this Act." As the Supreme Court confirmed in *Iowa Utilities Board*, the Commission's section 201(b) rulemaking jurisdiction is not limited to jurisdictionally interstate matters covered elsewhere in section 201. Instead, it extends to *all* provisions of the Communications Act, including the provisions added by the 1996 Act that encompass matters that, before 1996, fell within the exclusive jurisdiction of the states.[54] It is thus undisputed that the Commission may adopt rules implementing section 251(b)(5) and the other statutory provisions governing carrier interconnection with respect to all traffic—interstate and intrastate—within the scope of those provisions. This authority permits the Commission to implement the ICF Plan's comprehensive approach to intercarrier compensation for any exchange of telecommunications traffic.

Congress drafted section 251(b)(5) expansively to bring national consistency to questions of intercarrier compensation. By its terms, this provision extends to all compensation issues relating to the transport and termination of "telecommunications" involving any local exchange carrier. The breadth of that language is significant in three principal respects. *First*, and perhaps most important, section 251(b)(5) makes no distinctions among traffic on the basis of jurisdiction ("local," "toll," "intrastate," "interstate") or service definition (*e.g.*, "exchange access," "information access," or "exchange service"). All such traffic is plainly

---

[54] *AT&T Corp. v. Iowa Utils. Bd.*, 525 U.S. 366, 377-86 (1999).

"telecommunications." In its *ISP Remand Order* in 2001, the Commission was thus entirely correct in concluding that "[w]e were mistaken [in the *Local Competition Order*] to have characterized" section 251(b)(5) as limited to local traffic, given that "'local' . . . is not a term used in section 251(b)(5) or section 251(g)."[55] The D.C. Circuit left this conclusion intact on review, although it took issue with other aspects of the *ISP Remand Order*.[56]

If it had wished, of course, Congress could have limited the scope of this provision to "local telecommunications," to "telecommunications that originate and terminate within the same local calling area," or to "telecommunications handed off from one LEC directly to another LEC." But Congress included no such limitations on the scope of section 251(b)(5). Instead, it drafted section 251(b)(5) broadly to address all "telecommunications," the most expansive of the statute's defined terms.[57]

Despite the clarity of this statutory language, some continue to argue that the Commission's jurisdiction to implement section 251(b)(5) extends only to "local" traffic and that the Commission thus lacks authority under that provision to address intercarrier compensation issues relating to any category of traffic that is deemed to be neither "local" nor "interstate." This misguided effort to carve up the Commission's rulemaking authority on the basis of such legacy jurisdictional categories is not just irreconcilable with the plain language of section 251(b)(5), but strikingly similar to the unavailing attacks in the 1990s on the Commission's jurisdiction to implement sections

---

[55] *See ISP Remand Order* at 9167, 9172 ¶¶ 34, 45.

[56] *See WorldCom, Inc. v. FCC*, 288 F.3d 429 (D.C. Cir. 2002).

[57] *See* 47 U.S.C. § 153(43).

251 and 252 more generally. Here, as in that context, the attempt to "produce[] a most chopped-up statute" along jurisdictional lines is flawed both because it violates the statutory text and because it is "most unlikely that Congress created such a strange hodgepodge."[58]

Second, as the Commission has further found, section 251(b)(5) applies not just to the exchange of traffic between two LECs, but more broadly to the exchange of any traffic involving a LEC at one end.[59] In other words, although the obligation to establish reciprocal compensation arrangements for the transport and termination of telecommunications falls on LECs, Congress did not limit to other LECs the class of potential *beneficiaries* of that obligation.

Third, as the Commission has further indicated, section 251(b)(5) covers intercarrier compensation issues on the originating end of a call as well as the terminating end, even though it explicitly addresses only the "transport and termination of telecommunications." As the Commission recognized in the *Local Competition Order*, because section 251(b)(5) provides for intercarrier compensation only for termination of traffic and does not authorize charges for originating traffic, LECs could no longer charge CMRS providers or other carriers for LEC-originated traffic.[60] Thus, with the exception

---

[58] *Iowa Utils. Bd.*, 525 U.S. at 381 n.8.

[59] *See Local Competition Order* at 16016 ¶ 1041 ("Although section 251(b)(5) does not explicitly state to whom the LEC's obligation runs, we find that LECs have a duty to establish reciprocal compensation arrangements with respect to local traffic originated by or terminating to *any* telecommunications carriers," including non-LEC CMRS providers) (emphasis added). Where Congress intended LECs' 1996 Act obligations to run only to a limited class of carriers, it did so explicitly. *See, e.g.*, 47 U.S.C. § 251(b)(3) ("The duty to provide dialing parity to competing providers of telephone exchange service and telephone toll service. . . .").

[60] *Local Competition Order* at 16016 ¶ 1042.

of pre-1996 Act compensation rules temporarily grandfathered by section 251(g), section 251(b)(5) is properly read to bar carriers from imposing any charges, including access charges, for the costs of originating traffic.

Because the statutory language itself compels the conclusion that the Commission's section 251(b)(5) authority extends to *all* telecommunications involving a LEC, the Commission would face formidable litigation risks were it now to reverse course yet again on the scope of section 251(b)(5). Indeed, as the D.C. Circuit recently admonished, "[e]ven under the deferential *Chevron* standard of review, an agency cannot, absent strong structural or contextual evidence, exclude from coverage certain items that clearly fall within the plain meaning of a statutory term."[61] The statutory context in which the D.C. Circuit enforced that principle is closely analogous to the statutory context here. Just as the court applied that principle to reject the Commission's "argument that long distance services are not 'telecommunications services'" for purposes of section 251(d)(2), so too is the Commission barred from finding that particular categories of "telecommunications" do not *count* as "telecommunications" for purposes of section 251(b)(5).

Were there any remaining question about the Commission's jurisdiction to address all telecommunications under section 251(b)(5), including access traffic, it would be resolved by section 251(g). That provision singles out access traffic for special treatment and temporarily grandfathers the pre-1996 rules applicable to such traffic, including rules governing "receipt of compensation."[62] There would have been no need

---

[61] *USTA v. FCC*, 359 F.3d 554, 592 (D.C. Cir. 2004).

[62] 47 U.S.C. § 251(g).

for Congress to have preserved those compensation rules against the effects of section 251 if section 251(b)(5) did not in fact address the "receipt of compensation" for the traffic covered by section 251(g)—*i.e.*, access traffic. Because Congress is presumed not to have wasted its breath, the only sensible interpretation of section 251(g) confirms what section 251(b)(5) already makes clear on its face: that intercarrier compensation for all access traffic falls within the broad scope of the Commission's jurisdiction to implement section 251.

In a footnote of the *ISP Remand Order*, the Commission obliquely suggested that "ambiguity" in the scope of "telecommunications" might support a construction that *intrastate* access traffic falls outside of section 251(b)(5).[63] As noted, however, there is no such ambiguity: the statutory definition of "telecommunications" straightforwardly encompasses all access traffic. Moreover, there is no basis for the apparent policy concern that motivated the Commission to look for ambiguity in this unambiguous language—*i.e.*, a concern that (i) section 251(g) preserves only the *interstate* access charge regime (until the adoption of superseding Commission regulations) but not the parallel intrastate access regime and (ii) Congress should be presumed not to have intended to have undercut the latter regime immediately upon enacting the 1996 Act.[64] No less than its interstate counterpart, the intrastate access charge regime derives from the 1982 AT&T consent decree and the subsequent GTE decree.[65] Contrary to the Commission's apparent belief, therefore, the intrastate access

---

[63] *See ISP Remand Order* at 9168 ¶ 37 n.66.

[64] *See id.*

[65] Before 1982, compensation for interexchange access was generally derived through an AT&T-administered system of settlements and division of revenues. Second

regime falls squarely within the ambit of section 251(g), which grandfathers "equal access and nondiscriminatory interconnection . . . obligations (including receipt of compensation) . . . under any court order, consent decree," or FCC order. Indeed, it would have been perverse for Congress to have authorized the Commission to reform intercarrier compensation rules relating to "local" and "interstate" traffic but *not* the rules applicable to the one class of traffic—intrastate access—that is subject to the *highest* above-cost charges and that is generally thought to be most laden with unsustainable implicit support.

In any event, even if section 251(g) were read *not* to grandfather intrastate access charges, that reading would raise no pragmatic concerns about the broad scope of section 251(b)(5), for the Commission could still exercise its well-established authority to impose interim rules ensuring a smooth transition to a new regulatory regime. Indeed, in a variety of contexts, and particularly in matters of intercarrier compensation, the courts

---

Supplemental Notice of Inquiry and Proposed Rulemaking, *MTS and WATS Market Structure*, 77 F.C.C.2d 224, 227-28, 234 ¶¶ 15-19, 47 (1980). The AT&T consent decree replaced that system with a regime of federal *and* intrastate access charges. *See United States v. AT&T Co.*, 552 F. Supp. 131, 227, 233 (D.D.C. 1982); Third Report and Order, *MTS and WATS Market Structure*, 93 F.C.C.2d 241, 246 ¶ 11 (1983). The court order accompanying the consent decree made clear that the decree required access charges to be used in both the interstate and intrastate jurisdictions: "Under the proposed decree, state regulators will set access charges for intrastate interexchange service and the FCC will set access charges for interstate interexchange service." *AT&T*, 552 F. Supp. at 169 n.161. Thus, both interstate and intrastate access charges were borne of the same "consent decree," and both are preserved under section 251(g). There is also no evidence in the legislative history that Congress intended to treat intrastate access charges any differently, for grandfathering purposes, from interstate access charges. To the contrary, the House Conference Report broadly states that "the substance of this new statutory duty" under section 251(g) "shall be the equal access and nondiscrimination restrictions and obligations, including receipt of compensation, that applied to the local exchange carrier immediately prior to the date of enactment, *regardless of the source*." H.R. CONF. REP. NO. 104-458, at 123 (1996) (emphasis added).

have long upheld the Commission's expansive authority to take reasonable transitional measures needed to protect the industry from sudden disruptions.[66] The Commission's authority to adopt similar measures to manage the transition from access charges to a unified section 251(b)(5) regime forecloses any claim that Congress must have meant to exclude intrastate access charges permanently from the scope of section 251(b)(5). And this same authority permits the Commission to adopt the ICF Plan's proposed transition from the present schemes of intercarrier compensation to a unified system based on bill-and-keep principles.

B. The Commission Has Substantive Authority to Impose Bill and Keep for All Telecommunications Traffic and to Impose the ICF Plan's Proposed Transition from Current Rates to Bill and Keep

The Commission not only has *jurisdiction* to impose a unified intercarrier compensation system for all traffic, but also the authority to prescribe a transition to substantive compensation rules based primarily on bill and keep, even for "unbalanced" traffic subject to the pricing rules of sections 251(b)(5) and 252(d)(2).

In the *Local Competition Order*, at the same time that the Commission erroneously limited the scope of section 251(b)(5) to local traffic, it also found—more as a matter of policy than of statutory interpretation—that bill and keep was inappropriate for unbalanced traffic.[67] In the present context of comprehensive intercarrier compensation reform of *all* traffic, including access traffic, the Commission now should focus more carefully on the breadth of its statutory authority and reach the contrary

---

[66] *See, e.g.*, *CompTel v. FCC*, 309 F.3d 8, 15 (D.C. Cir. 2002); *CompTel v. FCC*, 117 F.3d 1068, 1073-75 (8th Cir. 1997).

[67] *See Local Competition Order* at 16054-55 ¶¶ 1111-12.

conclusion—namely, that the text of section 252(d)(2) permits the Commission to order bill and keep for all traffic, including unbalanced traffic.[68]

As an initial matter, section 252(d)(2)(A) directs the Commission and the states (i) to "provide for the mutual and reciprocal recovery by each carrier of costs associated with the transport and termination on each carrier's network facilities of calls that originate on the network facilities of the other carrier," and (ii) to "determine such costs on the basis of a reasonable approximation of the additional costs of terminating such calls." This language is perfectly consistent with a regime, such as bill and keep, in which each carrier is afforded an opportunity for "recovery" of those costs from its own end users.[69]

If there were any question on this point, it would be answered by the "bill-and-keep savings clause." Section 252(d)(2)(B)(i) expressly authorizes all regulatory "arrangements that afford the mutual recovery of costs through the offsetting of reciprocal obligations, including arrangements that waive mutual recovery (such as bill-and-keep arrangements)." The "bill-and-keep"-like provisions of the ICF Plan entitle carriers to the "mutual recovery of costs" by permitting them to recover those costs through end user charges and, where necessary, universal service. As the legislative history confirms, this clause thus permits "a range of compensation schemes, such as an in-kind exchange of traffic without cash payment (known as bill-and-keep

---

[68] *See WorldCom*, 288 F.3d at 434.

[69] *See Local Competition Order* at 16055 ¶ 1112 ("bill-and-keep arrangements that lack *any* provisions for compensation do not provide for recovery of costs") (emphasis added).

arrangements)."[70] Importantly, the D.C. Circuit has already indicated its support for the same conclusion, noting the "non-trivial likelihood that the Commission has authority to elect" a bill-and-keep regime for section 251(b)(5) traffic under the terms of section 252(d)(2)(B)(i), which the court specifically cited.[71] Although section 252(d)(2), like the 1996 Act as a whole, "is in many important respects a model of ambiguity or indeed even self-contradiction," Congress "is well aware that the ambiguities it chooses to produce in a statute will be resolved by the implementing agency."[72] Here, the Commission can and should resolve any ambiguity in this statutory language in favor of an appropriately robust construction of the bill-and-keep savings clause.

Reading section 252(d)(2) to preserve the Commission's discretion in this respect does *not* reduce the pricing standards of section 252(d)(2) to surplusage. That provision is properly understood to require the Commission to choose, for all traffic within the scope of section 251(b)(5), *either* bill and keep, so long as carriers may recover their costs from end users directly (or, where appropriate, from universal service support), *or* a genuinely cost-based CPNP regime. Section 252(d)(2) still precludes *non*-cost-based compensation rules as well as arrangements (common before 1996) under which an *originating* carrier charges a *terminating* (or intermediate) carrier for handing off calls to it. And the Commission's choice of a bill-and-keep-type methodology rather than a CPNP rule is particularly reasonable now, since eight years of experience have shown that CPNP creates the potential for serious market distortions and that it is too

---

[70] S. REP. NO. 104-230, at 120 (1996).

[71] *See WorldCom*, 288 F.3d at 434.

[72] *AT&T Corp. v. Iowa Utils. Bd.*, 525 U.S. at 397.

costly (if possible at all) to ensure "perfect" cost-based rates. The Commission is thus more than free to revisit and reject its unelaborated assumption in the *Local Competition Order* that Congress meant to lock in those distortions forever through the relevant statutory language.[73]

In addition, as the D.C. Circuit further suggested in citing the bill-and-keep savings clause as a basis for remanding but not vacating the *ISP Remand Order*, the Commission would not overstep any *jurisdictional* boundaries established in *Iowa Utilities Board* by prescribing bill and keep for all traffic. Under *Iowa Utilities Board*, the Commission has plenary jurisdiction to make very specific methodological decisions about the implementation of section 251, and a choice of bill and keep is precisely such a decision, even though it has the effect of producing specific outcomes in matters of intercarrier compensation. Indeed, the Commission cannot *avoid* prescribing the circumstances in which bill and keep is appropriate if it is to play its statutorily assigned role in interpreting the scope of the bill-and-keep savings clause of section 252(d)(2).

For all of these reasons, sections 252(d)(2) and 251(b)(5) pose no obstacle to an FCC-mandated transition to the ICF Plan. Finally, this transition would not occur in one step. As noted, the Commission has ample authority to avoid sudden industry

---

[73] *See Chevron U.S.A., Inc. v. Natural Res. Def. Council*, 467 U.S. 837, 863-64 (1984) (agency is free to change mind on matters of statutory interpretation); *Smiley v. Citibank*, 517 U.S. 735, 742 (1996) ("[C]hange is not invalidating, since the whole point of *Chevron* is to leave the discretion provided by ambiguities of a statute with the implementing agency."); *see also Independent Bankers Ass'n v. Farm Credit Administration*, 164 F.3d 661, 668 (D.C. Cir. 1999).

disruptions by adopting the Plan's proposal for a transitional glide-path from existing intercarrier compensation rates to a unified regime.[74]

IV. No Other Plan Currently Before The Commission Offers A Comprehensive, Detailed, Legal Solution That Serves The Public Interest And Meets The Commission's Reform Goals

Although the Commission has received alternative reform proposals from a range of single-interest groups, those proposals suffer from at least four fatal flaws:

(1) None of the alternative proposals offers a comprehensive or balanced solution to the full range of issues before the Commission.

(2) All but one of the other proposals would continue to subject identical uses of the network to radically different regulatory regimes – one of the principal problems this proceeding was initiated to solve.

(3) All of the other plans would require massive and burdensome proceedings and litigation to implement – and many of the contemplated proceedings would be unlawful.

(4) None of the other plans would adequately protect universal service.

A. No Other Proposal Offers Either a Comprehensive or Balanced Solution.

Each of the other reform proposals contains numerous specific, substantive flaws, which we discuss in detail below. At the outset, however, it is important to emphasize that each of the other plans suffers from two fundamental and ultimately fatal flaws: none is either *comprehensive* or *balanced*. Given the urgent need

---

[74] *See CompTel*, 117 F.3d at 1074-75; *see also CompTel*, 309 F.3d at 15 ("the Commission can justify a policy by reference to the purposes of avoiding disruption pending a broader reform").

for a truly unified system of intercarrier compensation, these sketchy and unbalanced proposals cannot solve the problems this rulemaking proceeding is meant to address.

First, no other proposal before the Commission is adequately comprehensive or detailed. The issues involved in this proceeding are among the most difficult and complex in the communications regulatory world today. The highly interrelated nature of these issues demands a comprehensive solution that addresses network interconnection, intercarrier compensation, and universal service reform in a coherent, coordinated manner. The ICF Plan is the only plan before the Commission that accomplishes this goal.

Indeed, four of the seven other "proposals" identified in the Notice—those of NASUCA, CTIA, Western Wireless, and CBICC —are simply lists of general principles that the proponents suggest should guide the Commission's reform efforts.[75] And ARIC and EPG—two of the groups that have submitted more detailed proposals—

---

[75] *See, e.g.*, *Developing a Unified Intercarrier Compensation Regime*, CC Docket No. 01-92, Letter from Steve Largent, President and CEO, CTIA, to Marlene H. Dortch, Secretary, Federal Communications Commission (filed Nov. 29, 2004) ("CTIA principles") (3 pages); *Developing a Unified Intercarrier Compensation Regime*, CC Docket No. 01-92, Letter from David L. Sieradzki, Counsel for Western Wireless Corp. to Marlene H. Dortch, Secretary, Federal Communications Commission (filed Dec. 1, 2004) ("Western Wireless proposal") (5 pages); *Developing a Unified Intercarrier Compensation Regime*, CC Docket No. 01-92, Letter from Richard M. Rindler to Marlene H. Dortch, Secretary, Federal Communications Commission (filed Sept. 2, 2004) ("CBICC proposal") (4 pages, and an additional 4 of rhetoric opposing bill-and-keep); National Association of Regulatory Utility Commissioners Study Committee on Intercarrier Compensation Goals for a New Intercarrier Compensation System, May 5, 2004 ("NARUC principles") (4 pages). After the Commission issued its Notice, NARUC also submitted a draft proposal from its Intercarrier Compensation Task Force, discussed below. The NARUC principles were attached to this draft task force proposal.

have now issued their own list of common principles, but no common or detailed plan for their implementation.[76]

These lists of general principles, while conceptually important, by themselves are of limited value to the Commission, and the Commission should accordingly give them little weight in its actions in this docket. Inevitably, they contain insufficient detail to give carriers clear guidance as to their responsibilities or to permit the Commission to write substantive rules. Indeed, many of them raise more questions than they answer and, in leaving important questions unanswered, invite protracted negotiation, arbitration and litigation among carriers seeking competitive advantage. The Commission's goal to minimize disputes and to develop a clear plan that is easy to administer can be achieved only with a plan, like the ICF's, that is detailed enough to define clearly each carrier's responsibilities, keeping ambiguity to a minimum.

To contribute meaningfully to the public debate and the Commission's analysis, the operation of broad principles in real-world situations must be explained at a granular level that permits the Commission to issue detailed implementing rules. Until this has occurred, the Commission has little basis on which to choose one set of principles over another, as the public interest implications only become clear once the principles have been reduced to an operational proposal for concrete reform. Indeed, until that process has occurred, there is little evidence that even the proponents themselves fully understand the implications of what they are asking.

Second, no other proposal offers a balanced solution crafted with the public interest paramount. To ensure balance and minimize the risk of unintended

---

[76] *See* Rural Alliance Press Release at 1.

consequences, a comprehensive plan for reform must consider diverse perspectives, with the ultimate goal of advancing the Commission's mandate to serve the public interest. Only the checks and balances inherent in a cross-industry, collaborative process can ensure that the resulting plan will appropriately balance competing interests, address all of the interrelated aspects of comprehensive reform and minimize unintended consequences.

The ICF Plan is the only reform proposal before the Commission that was developed in this way. Each of the other proposals each represents an attempt by an individual company or homogeneous group to advance a limited set of parochial interests. The resulting proposals, unsurprisingly, advocate outcomes on particular issues that would benefit the proponents, but fail to offer a solution that could remotely be considered fair, balanced or complete with respect to the full spectrum of interrelated issues before the Commission.

For example, the ARIC, EPG, and Home/PBT proposals represent a narrow perspective on the nation's overall telecommunications needs. Rural ILECs serve a small fraction of the nation's lines and carry a small fraction of the nation's telecommunications traffic. The Commission certainly should consider their unique circumstances and concerns, and the ICF Plan incorporates rural perspectives as one of many, given that some ICF members serve rural areas. The ICF Plan, as a result, strikes an appropriate balance among all competing interests, including those of rural America. But the discrete interests of a small percentage of rural ILECs should not be permitted to dictate overall policy and derail needed reforms for the large majority of the country.

Moreover, it is not even clear that the ARIC, EPG, and Home/PBT plans have broad support even among rural ILECs. ARIC characterizes itself as "a group of small rural, high-cost telecommunications companies from across the country,"[77] but, other than two rural Nebraska ILECs, Great Plains Communications and Consolidated Telecommunications Company, it has failed to identify any party that supports adoption of its proposal.[78] Similarly, EPG lists 23 small rural ILECs and five rural ILEC consulting firms that "participated in the development of" its proposal, without clearly identifying which, if any, support the final product.[79] Among the participants EPG lists is Home Telephone Company, Inc., one of two small, rural South Carolina companies that also developed and publicly support the Home/PBT proposal.[80] As noted above, ARIC and EPG recently further complicated matters by announcing that they had united to form the "Rural Alliance," despite substantial conflicts between their two reform proposals.[81]

---

[77] *Developing a Unified Intercarrier Compensation Regime*, CC Docket No. 01-92, *Ex Parte* filing of the Alliance for Rational Intercarrier Compensation (filed Oct. 25, 2004) at 5 ("ARIC proposal").

[78] *See Developing a Unified Intercarrier Compensation Regime*, CC Docket No. 01-92, Letter from Ken Pfister, Vice President – Strategic Policy, Great Plains Communications, Inc. to Marlene H. Dortch, Secretary, Federal Communications Commission (filed Jan. 26, 2005).

[79] *Developing a Unified Intercarrier Compensation Regime*, CC Docket No. 01-92, Letter from Glenn H. Brown, EPG Facilitator, to Marlene H. Dortch, Secretary, Federal Communications Commission (filed Nov. 2, 2004) ("EPG proposal"), at 35.

[80] *Developing a Unified Intercarrier Compensation Regime*, CC Docket No. 01-92, Letter from Keith Oliver, Vice President-Finance, Home Telephone Company, Inc. and Ben Spearman, Vice President, Chief Regulatory Officer, PBT Telecom, to Marlene H. Dortch, Secretary, Federal Communications Commission (filed Nov. 2, 2004) ("Home/PBT proposal")

[81] Press Release, *EPG and ARIC Unite to Form a "Rural Alliance" for Intercarrier Compensation and Universal Service Reform*, rel. Feb. 14, 2005, *available at* http://www.arictelecom.com/pdf/ARIC_&_EPG_Unite_2-14-05.pdf.

They issued a two-page list of principles that they agree should govern intercarrier compensation and universal service reform, but made no other effort to harmonize these conflicts. Indeed, it is not clear what parts of either the ARIC or EPG will be incorporated in the "Rural Alliance" proposal.

The CBICC and Western Wireless proposals are similarly lopsided in favor of CLECs and wireless carriers, respectively. The only competing proposal that makes any pretense of balance at all is the NARUC Task Force's draft-in-progress. The NARUC Task Force on Intercarrier Compensation ("Task Force") has begun work to develop a detailed and comprehensive reform proposal, and submitted an initial draft proposal on March 1, 2005 (the "Task Force Draft"). NARUC acknowledges that "discussions continue on the Task Force proposal in an attempt to reach a still broader consensus on key issues."[82] The ICF commends the Task Force's effort as one that is attempting to craft a comprehensive plan that acknowledges the needs and concerns of a diverse group of stakeholders. The Task Force has convened a series of six workshops involving a diverse group of industry stakeholders, a representative of consumer interests, and state commissioners and staff, and the ICF has participated in these workshops and shared its ideas, goals and concerns with the Task Force and the other workshop participants.

---

[82] Letter from Robert B. Nelson, Commissioner, Michigan Public Service Commission, Elliott G. Smith, Board Member, Iowa Utilities Board, and Ray Baum, Commissioner, Oregon Public Utility Commission to Michael Powell, Chairman, Federal Communications Commission, CC Docket No. 01-92 (filed Mar. 1, 2005) at 2 (quoting NARUC Resolution on the NARUC Intercarrier Compensation Task Force (Feb. 16, 2005)).

The ICF supports some of the Task Force's early, high-level conclusions. For example, the Task Force Draft correctly recognizes the need for coordinated and concurrent action to reform network interconnection, intercarrier compensation, and universal service support mechanisms. The Task Force Draft endorses much of ICF's network interconnection proposal, stating that, "a complete proposal must address the issues of transport and tandem transit."[83] Similarly, the Task Force Draft recognizes that, "the current interstate revenue base of the Federal Universal Service Fund cannot be relied upon for the future."[84]

Despite the considerable effort the Task Force has made, however, ICF cannot endorse the Task Force Draft. Significant elements of the proposal remain tentative or incomplete, such as whether the Task Force will endorse eliminating or retaining originating access charges, how universal service should be funded, and other critical items. Moreover, the ICF has seen little evidence that the Task Force's efforts have produced any meaningful consensus on a concrete and integrated reform proposal. Rather, after hearing from all sides, the Task Force members have acted in a role akin to that of arbitrators, deciding on an issue-by-issue basis which aspects of each competing plan to adopt. The Task Force Draft, while proposing some new ideas, is largely an amalgamation of individual pieces of the proposals developed by other stakeholders. Because it was not developed holistically, it is unlikely that its individual elements will operate well together as a complete working system. And, at least as currently structured, the Task Force Draft suffers from a number of disabling flaws. The ICF does believe,

---

[83] Task Force Draft at 11.

[84] Task Force Draft at 8.

however, that the Task Force is sensitive to the need to harmonize all parts of their ultimate proposal, and to ensure that it can be implemented.

The ICF is the only group that represents a broad cross-section of the industry *and* has reached a balanced consensus among the parties on a detailed, comprehensive plan. That consensus and any fair reading of the ICF Plan provides objective evidence that its plan is balanced, adequately addresses the concerns of all parties and, most importantly, would serve the public interest.

B. The Other Plans Would All Continue To Subject Identical Uses of the Network to Radically Different Regulatory Regimes.

One of the principal purposes of this proceeding is to institute a *unified* intercarrier compensation regime: one that does away with the hodgepodge of different regulatory regimes that apply to essentially identical uses of the network. Such a uniform regime, built on simple and predictable rules, is critically important to ensure market-oriented outcomes and to eliminate incentives to design business plans to take advantage of regulatory disparities. The ICF proposal is the *only* plan that accomplishes that goal. All of the remaining plans merely nibble at the edges of this problem. With the exception of the Western Wireless plan, all of the other plans fundamentally retain today's outdated calling-party-network-pays philosophy, and continue to place identical uses of the network in different regulatory "boxes" depending on the type of services or type of carrier at issue. And while the Western Wireless plan purports to transition toward uniform *compensation* rules, it fails to resolve in any meaningful way the interconnection issues that equally important to efficient, uniform, competitively neutral outcomes. In other words, each of the other proposals leaves in place the fundamental problems this proceeding is meant to address—and, accordingly, each would be doomed to failure.

Many of these flaws stem from the fact that these plans cling to today's outdated CPNP philosophy. As the Commission has recognized, CPNP is no longer an appropriate or workable underpinning for the Commission's intercarrier compensation rules. The *Notice* points out that, "[d]evelopments in the ability of consumers to manage their own telecommunications services undermine the premise that the calling party is the sole cost causer and should be responsible for all the costs of the call."[85] Moreover, in a world of rapidly advancing technology, identifying the "calling party's network" is rapidly becoming an exercise in futility guaranteed to provoke wasteful litigation. Indeed, the current rules fail to define the "calling party's network" in a uniform manner even for today's technologies. The rules require regulators to distinguish calls where the calling party's LEC is said to provide "retail" network connectivity from other calls where the calling party's LEC provides identical functionality but is classified as a "wholesale" provider of such connectivity. Under the current access charge system, when a network sells connectivity "wholesale" to an interconnected carrier (such as an IXC), that "wholesale" purchaser becomes the "calling party's network," despite lacking any direct network connection to the subscriber, and must assume the payment obligation for termination as well as paying the wholesaler an origination fee.

This retail/wholesale dichotomy between minutes of use provided over the same network facilities cannot be sustained in a world where consumers have multiple alternative routes to access the PSTN. Inefficiency and implicit support inherent in the wholesale access model are driving customers to VOIP, wireless, and other services that operate under simpler, more market-based rules. Nevertheless, the ARIC, EPG,

---

[85] Notice at ¶ 17.

Home/PBT, CBICC, and NASUCA proposals all effectively retain this retail/wholesale dichotomy, thus impeding any effort to eliminate the distinction between local and toll traffic that today is based entirely on the historical local calling areas established by regulators. As the Commission has already recognized in many contexts, however, it is no longer routinely possible to identify the location of a called or calling party.

As explained below, each of the competing plans retains different regulatory regimes for similar and competing traffic, and thus would perpetuate precisely the problems this proceeding is meant to eliminate.

NARUC. NARUC's Task Force Draft fails to ensure national uniformity. Although the Task Force Draft *strives* for uniform rates and creates incentives for states to participate,[86] its reforms are optional in the sense that each state is free to adopt or reject them, in whole or in part, as it sees fit. Undoubtedly, some states will opt out. The result will be a nationwide patchwork little better than the failed framework that carriers and consumers face today. If even one state were to retain the legacy system, it would create administrative burdens and intercarrier disputes for carriers across the country, because traffic that originated from or terminated to customers in that state would travel nationwide. To be successful, intercarrier compensation reform must be nationwide and must establish a truly uniform system for all services in all states.

ARIC. ARIC's proposal tackles only one aspect of the lack of uniformity in today's intercarrier compensation regime: the disparities among interstate access, intrastate access, and reciprocal compensation rates. ARIC would preserve virtually all other aspects of the legacy, CPNP-based regulatory structure, including dual regimes for

---

[86] Task Force Draft at 5, 10.

network interconnection and originating access charges that impose differing financial obligations on an interconnecting carrier and substantial rate disparities among carriers.

Even while acknowledging the need for greater uniformity, ARIC's proposal retains many of the fundamental inconsistencies inherent in the current calling party network pays scheme. The ARIC plan would maintain a distinction between local and toll calling, although it has rephrased that as a distinction based on which carrier provides "retail service." It would apply varying rates depending on the type of carrier—IXC, CMRS, CLEC and LEC—exchanging traffic, thereby continuing implicit support and arbitrage. It would impose a single statewide SLC rate by permitting price cap LECs to increase their SLCs to offset lower intercarrier rates, and then permitting rural companies to decrease their SLCs to the weighted average for price cap companies within the state. And it would fail entirely to address the issues arising from different calling scopes for CLECs and wireless carriers, the jurisdictional issues surrounding VOIP, or current disputes over transport obligations arising from the network configurations of new entrants.

The ARIC proposal is only a half-answer even with respect to the one problem it does address—the disparity between interstate and intrastate access rates. The ARIC plan seeks "uniformity" by attempting to create access charge rate levels and structures that do not differ between the state and interstate jurisdictions. But while ARIC unifies *access* rate structures and levels between the state and federal jurisdictions, it fails to make those rate levels uniform among different types of carriers. That disparity itself will create substantial litigation and dispute over the structure and level of costs of various carriers—even if the analysis is limited to ILECs because traffic will be

exchanged between carriers operating in neighboring territories. This approach ensures that there will continue to be a need for substantial regulatory intervention, rather than "limit[ing] both the need for regulatory intervention and arbitrage concerns arising from regulatory distinctions unrelated to cost difference."[87]

Even more significantly, however, ARIC fails feasibly to implement the FCC's direction that it is interested "in not only similar rates for similar functions, but also in a regime that would apply these rates in a uniform manner for all traffic."[88] ARIC fails to recognize that the procedures needed to distinguish, delineate, and enforce when the access and reciprocal compensation mechanisms apply are the source of much of the economic inefficiency, arbitrariness, and dispute within the current regimes.

ARIC insists that it creates uniform application by using its "retail service provider pays" formulation, but this uniformity of application is illusory. What reveals ARIC's true objective is the output of its proposal: ARIC seeks to replicate and to permanently enshrine the existing access revenue flows from unaffiliated interexchange carriers to the originating LEC. But the "retail service provider pays" instruction is no simpler than trying to distinguish between "access" and "non-access" traffic. For example, there is no clear line to delineate when a user of the network is merely a user, and not subject to ARIC's intercarrier compensation scheme, versus when the user of a network is required to pay. ARIC, for example, asserts that dial-up ISPs are carriers, but provides no analysis to distinguish the dial-up ISP from an audiotex provider, telemarketer or pizza delivery company that earns revenue from the use of the network.

---

[87] Further Notice at ¶ 33.

[88] *Id*.

Furthermore, there can be multiple entities with multiple end user retail relationships for a single call. A traditional interstate long distance call today involves at least three retail relationships: the originating LEC with the originating caller, which charges the SLC to cover the interstate loop and port costs; the IXC with the originating caller, which charges a toll rate to cover the costs from originating end office switch through the terminating end office switch; and the terminating LEC, which charges the SLC to the terminating caller to recover the interstate terminating loop and port costs. By attempting to define each "retail service," and then trying to identify the "provider" of that service, ARIC essentially slaps a new coat of paint on today's worn-out regulatory jalopy and promises that, with a little work, she will be as good as new. By perpetuating this framework, and the substantial rate disparities between different kinds of traffic, ARIC would only perpetuate the sources of many of today's ongoing disputes.[89]

Of all the other plans, the ARIC plan is the only one that expressly attempts to address the conflict between the Internet model and the legacy model. But ARIC does so by trying to have the government mandate that the legacy revenue flows of the PSTN be replicated for IP-based services. Notwithstanding the fact that such charges have not evolved for DSL services to date, ARIC asks the Commission to create mandatory per-session fees that a LEC would charge to an ISP—and ARIC anticipates

---

[89] In addition, by substantially *increasing* the rate level applicable to local interconnection traffic, ARIC's proposal is directly contrary to the Commission's sound policy, established for over two decades, of steadily decreasing intercarrier compensation rates. *See, e.g., Policies and Rules Concerning Rates for Dominant Carriers*, CC Docket No. 87-313, Second Report and Order, 5 FCC Rcd 6786, 6799 (1990), at ¶ 100 (adopting productivity offset as part of new price cap rate regulation rules) and cases cited at note 44, above.

that the ISP would then bill that session charge to the end user.[90] The clear intent of ARIC's proposal is to use government regulation forcibly to shift cost recovery for IP-based services away from today's Internet model toward a regime that would raise complex cost-recovery questions and would inevitably result in the need for comprehensive regulatory oversight and intervention.

As the Commission recognized, to achieve true uniformity and competitive neutrality, the Commission must do more than simply unify the access and intercarrier compensation rate levels charged by each carrier. It must apply those rates in a uniform manner, rather than subjecting some traffic to origination charges while other traffic is delivered to interconnecting carriers without charge.[91] It must also make those rate levels uniform *among* carriers; otherwise disparities among termination rates will continue to frustrate the rate averaging and rate integration goals of Section 254(g). By failing to create uniform rates across carriers, ARIC's plan will impede the rate integration and rate averaging goals of § 254(g), just as steep differentials among access rates charged by various LECs do today.

EPG. The EPG plan also fails to provide needed uniformity. The EPG plan is structured in three steps. In Step 1, EPG would require all traffic to be properly labeled to permit accurate billing of intercarrier compensation; messages that are not properly labeled would be billed at the highest prevailing rate to the interconnecting carrier that delivered the traffic, and ultimately might be blocked.

---

[90] ARIC proposal at 97.

[91] Further Notice ¶ 33.

In Step 2, EPG would unify LEC intrastate and interstate access charges and reciprocal compensation at the interstate access charge rate level currently charged by each LEC. In addition, EPG would introduce an "access restructure charge" ("ARC") that would replace any additional revenue formerly recovered from intercarrier charges. The ARC would be a charge based on the number of working telephone numbers in service and would be collected based on a pooling mechanism that would average the recovery across all participants in NECA's "access tariff." Full eligibility for ARC funding would be contingent on a carrier exceeding a specified residential and single line business end user rate benchmark of $21.07 per month.[92]

In Step 3, EPG would replace existing rate structure with a series of capacity-based charges consisting of "Port" and "Link" charges, while preserving minute-of-use based pricing for tandem-routed switched access traffic. Interconnecting carriers would purchase "ports" and "links" that would allow them to originate or terminate a given amount of traffic to or from the ILEC's network. In addition, EPG would also introduce quality-of-service rate elements, if necessary to address packet-based services.[93]

Because the EPG proposal pursues the same kind of misguided "uniformity" as the ARIC proposal—unifying intrastate and interstate access rates without addressing the many other egregious fractures in the current system—it suffers from the same failings. Like ARIC, EPG fails to recognize the futility of any attempt objectively to identify a different "retail service provider" for every call and therefore

---

[92] EPG plan at 3-4.

[93] EPG plan at 5.

fails to achieve a uniform rate structure for "access" and "local interconnection" traffic, fails to create a uniform intercarrier compensation rate level applicable to all carriers, and fails to create uniform network interconnection rules. Moreover, while the EPG proposal ultimately would migrate the industry to a system of interconnection based on "ports" and "links" that interconnecting carriers would purchase from the ILEC, it does not appear to contemplate that the ILEC would purchase any "ports" or "links" from other carriers. Thus the ILEC alone would be entitled to recover a portion of the costs of its network from users of other networks. Such asymmetrical interconnection obligations are the very antithesis of uniformity.

Home/PBT. The Home/PBT proposal is similar to EPG's proposal in many respects. Like EPG, Home/PBT would transition intercarrier compensation to a system of capacity-based charges, but would do so immediately, and would eliminate per-minute charges as an alternative. Under the Home/PBT proposal, these capacity-based fees would be established based on national averages, with the difference made up through a "high cost connection fund" ("HCCF") charge, similar to EPG's ARC charge. In addition, carriers owning tandem switches would be required to tariff an "access tandem connection" fee that would apply to traffic that transits the tandem owner's network en route to the terminating rural carrier.

Thus, the Home/PBT proposal fails to achieve the uniformity in intercarrier compensation rate structures and levels needed to achieve meaningful reform. Recognizing a need for more uniformity in the Commission's network interconnection rules, Home/PBT makes a nascent proposal for network interconnection reform. Unfortunately, it is lopsided and woefully incomplete. Home/PBT proposes that each

carrier make available at least one POI within each LATA.[94] Under Home/PBT's proposal, rural carriers would specifically be entitled to establish a POI in each local calling area and interconnecting carriers would bear all costs of transporting traffic to or from that POI, effectively relieving the rural carrier of any financial obligation to transport traffic outside of any of its local calling areas, no matter where the traffic is destined to terminate.

With respect to other carriers, the proposal is far too vague to be implemented. After specifying the "at least one POI per LATA" rule, the proposal is entirely silent on whether any carrier faces a maximum number of POIs, and on the terms under which these POIs would be interconnected.[95]

CBICC. CBICC, a group composed largely of unnamed competitive LECs, would base all intercarrier compensation—access in addition to reciprocal compensation—on TELRIC rates.[96] Although marketed as a "uniform" system, the CBICC proposal, in fact, would maintain many of the disparities that plague the system today.

In particular, the CBICC retains the basic CPNP system. The CBICC proposal thus requires regulators to continue to differentiate when a LEC is acting as a "retail" provider of service to its end user and when it is acting as "wholesale" provider

---

[94] Presumably, a carrier that does not operate in a LATA would not be subject to this obligation in that LATA, although the proposal is not clear on this point.

[95] Home/PBT proposal at 13-14.

[96] CBICC submitted its proposal attached to an *ex parte* letter that indicated that representatives from Pac-West Telecomm, Inc., US LEC Corp., and Eschelon Telecom, Inc. had met with Commission representatives "on behalf of" CBICC, without providing the names of any other members. *See* CBICC proposal (cover letter).

of access to an IXC. Thus it would maintain originating access charges, and it would preserve substantial rate disparities among terminating carriers. It would also require the same type of "retail service provider pays" approach as the ARIC and EPG plans, with the same inevitable disputes and disparities as to who must pay whom. Thus, the CBICC proposal will do little to solve the problems the current system produces.

Moreover, as discussed previously with respect to the ARIC proposal, any "uniformity" from calculating all intercarrier rates based on TELRIC, without also addressing the application of those rates "in a uniform manner to all traffic," is illusory.[97] Under the CBICC proposal, individual state commissions would determine the TELRIC rates, and past experience starkly demonstrates that such rates would vary considerably from state to state. Rate levels would be uniform only for each ILEC within each state (even within a state, as rates would vary among ILEC service areas) or not among all carriers and among all the states—which would, among other things, perpetuate the rate disparities that are undermining the rate integration requirements of § 254(g).[98]

Some of the most serious problems with the current system spring from its disparate treatment of carriers and traffic types by maintaining differing network interconnection and rate structure rules, as well as its reliance on disparate pricing methodologies for setting "local" and "access" intercarrier compensation rates. Unifying rates at TELRIC levels attempts to address, at best, only one aspect of this overall problem. In that respect, the CBICC proposal is simply another example of one slice of the industry seeking to promote its own narrow parochial interests, with no thought to

---

[97] Further Notice at ¶ 33.

[98] *See* CBICC proposal at 1 ("[a] single rate for each relevant function would be set for each ILEC in each state").

balancing the needs of the entire industry. Indeed, the CBICC's insistence on retaining the CPNP rate structure, with all of its problems that this proceeding was convened to correct, seems aimed principally at allowing these CLECs permanently to maintain or increase their ISP-bound traffic and CLEC access charge payment streams to the maximum extent possible.[99]

Western Wireless. Western Wireless, alone among the other proposals, proposes a transition to a bill and keep system that would eliminate intercarrier payments and thus end today's system of similar traffic subject to different regulatory regimes. Western Wireless also acknowledges that uniform network interconnection rules are essential to such a system.[100] But Western Wireless's proposal fails entirely to provide the detail that would be needed to ensure uniform interconnection rules. The Western Wireless plan fails to specify, for example, (1) what constitutes an "edge"; (2) how many a carrier may designate; (3) what carriers are "hierarchical"; (4) how the transport rate for carriage of traffic between edges is calculated; (5) what rate (*e.g.*, local, intrastate, or interstate) is the "current switched dedicated transport rate" for purposes of computing the discount on interconnection transport; or (6) the basis for hierarchical ILEC transiting rates. As explained above, the details of the default network interconnection rules are critically important in establishing a functioning system that eliminates the disparities in

---

[99] *See, e.g.*, CBICC proposal at 2 (ISP-bound traffic moves to baseline state-adjudicated TELRIC rates, which often far exceed the current ISP-bound rates).

[100] Western Wireless proposal at 2. Under Western Wireless's proposal, a carrier would bear financial responsibility for delivering its originating traffic to another carrier's edge in a LATA or, at the option of the originating carrier, to a mutual meet point at a hierarchical ILEC's access tandem in the LATA. Non-ILECs interconnecting with a hierarchical carrier also have the option of requiring the hierarchical carrier to carry the traffic both ways between networks, for which the non-ILEC would pay 50% of the "current switched dedicated transport rate."

today's outdated CPNP regime. Without such "details," Western Wireless's proposal will not produce uniformity and indeed, cannot be meaningfully evaluated.

NASUCA. NASUCA's one-page list of principles offers the Commission no solution to the daunting problems with intercarrier compensation, network interconnection, and universal service that it now faces. It would fail to achieve comprehensive reform or neutrality, with respect either to intercarrier compensation rate structure and rate levels or network interconnection rules. Instead, NASUCA would retain today's patchwork network interconnection rules and, largely, today's interstate access rates,[101] with all of their attendant flaws, achieving nothing approaching the comprehensive reform needed to fix the current system. States would be encouraged, through unspecified means, to adopt similar rates, but that obviously cannot provide the needed assurance that uniformity will, in fact, be achieved.

C. The Other Plans Would Require Massive and Burdensome Proceedings to Implement and Would Provoke Endless Litigation.

Implementation of the other plans would also require extensive and burdensome litigation at both the federal and state levels. Most of these plans would also guarantee ongoing litigation, because they fail truly and unambiguously to unify the compensation regime.

---

[101] NASUCA proposes interstate intercarrier compensation rates of $0.0055 per minute for non-rural carriers and create a target rate of $0.0095 for rural carriers, which roughly match the current price cap target rates under the CALLS rules. *See* 47 C.F.R. § 61.3(qq). The FCC, however, never found that the CALLS rate caps would be appropriate as permanent rates. CALLS did not purport to be a permanent intercarrier compensation plan.

NARUC. The NARUC Task Force Draft expressly contemplates extensive state commission proceedings, formal referrals of issues to both the Federal-State Joint Board on Jurisdictional Separations and the Federal-State Joint Board on Universal Service, and potential referrals to one or more Joint Conferences. Indeed, the task Force Draft contemplates *two* succesive rounds of referrals: it requires a referral to the Joint Boards on Separations and Universal Service prior to the adoption of a new intercarrier compensation regime, and then it requires a second set of referrals to both Joint Boards for Recommended Decisions on "implementation issues." These successive referrals would undoubtedly take years, and would substantially delay implementation of reforms that are needed immediately.

Similarly, as noted above, the Task Force Draft allows individual states to opt into or out of the new intercarrier compensation regime, and there would inevitably be litigation before the state commissions as each state makes its opt-in decision. The task Force Draft also gives each state considerable latitude on issues such as how universal service funding would be deployed, which would also inevitably lead to significant litigation. The sheer number and magnitude of the proceedings to implement the NARUC plan make it extremely doubtful that it could be implemented before the end of the decade.

ARIC. The ARIC proposal also does nothing to relieve the ongoing regulatory bickering that today saps carrier resources and, instead, proposes massive new regulatory proceedings that will make matters far worse. By failing to create fully uniform rules at either the state or federal level, the ARIC proposal would perpetuate features of today's system that create massive dispute resolution costs, rob the industry of

stability it so desperately needs, and threaten to undermine decades of effort to achieve universal service.

The ARIC proposal, like the NARUC Task Force Draft, contemplates additional proceedings that will take years to complete—and then full-scale ongoing regulation at every level to administer—without even a nod to the 1996 Act's deregulatory goals. Implementation of the ARIC proposal would require extensive proceedings by the Commission to adopt implementing rules, the Federal-State Joint Board on Jurisdictional Separations to recommend rules for joint state and federal review of tariffs, the Federal-State Joint Board on Universal Service to establish local rate benchmark floors and ceilings for residential service,[102] and every state public utility commission to rebalance local rates and conduct ongoing review of tariff filings. In essence, ARIC's proposal would put every one of the country's ILECs through a rate proceeding covering both the interstate and intrastate jurisdictions.

EPG. Likewise, the EPG proposal would require massive regulatory proceedings to implement. EPG's plan would initially move intrastate switched and special access rate structures and levels to match those at the interstate level.[103] Within two years, EPG would convert dedicated services to a system of "port" and "link" charges.[104] EPG urges that the Commission and state commissions adopt these changes through an undefined "collaborative process that would not necessarily involve

---

[102] ARIC proposal at 61.

[103] EPG proposal at 3.

[104] *Id.* at 4, 31.

preemption by the FCC."[105] It would most certainly take years just to create such a process—if it could be created at all—before any movement to implement either of the major reforms EPG proposes. Moreover, even once that work was complete, "port" and "link" charges, no less than other charges for termination monopolies, would require constant, ongoing oversight from regulators.

CBICC. The CBICC proposal contemplates that all intercarrier compensation would be determined by the state commissions in accordance with the Commission's TELRIC methodology. As previously mentioned, this is a recipe for massive litigation.

First, carriers would be continually mired in litigation before every state commission in the country to determine the appropriate TELRIC rates in those states. This would cover not just those ILECs for which TELRIC rates have been established since the 1996 Act, but also LECs that have been exempt from such requirements. Such proceedings would take on increased importance, since the outcome of those proceedings would determine intercarrier rates for all traffic, not just reciprocal compensation for "non-access" traffic. States also typically revisit TELRIC rates roughly every few years, and such proceedings would also inevitably be subject to a constant stream of motions to re-open settled issues or to adjudicate new twists. Given the stakes, carriers would also be embroiled in endless appeals: the last ten years' federal reporters are filled with appeals of TELRIC-derived rates to the federal courts, with carriers challenging many minute details of the application of that methodology. And as noted above, the states and federal courts would inevitably adopt differing approaches to many of these issues of

---

[105] *Id.* at 28.

implementation and ratesetting, with the result that TELRIC rates would vary substantially across the country.

Moreover, the CBICC plan contemplates additional litigation for intrastate rates. Under its plan, interstate rates would immediately shift to the TELRIC baseline, but intrastate rates would be referred to the state commissions and the Joint Board. Accordingly, there would be substantial proceedings before the Joint Board, which could establish a different transition period to TELRIC rates (thus exacerbating the rate disparities that the CBICC plan already leaves in place). And there would be litigation before the state commissions, which could move intrastate rates "to or toward" the TELRIC baseline according to a different transition period. CBICC proposal at 2. Notably, this means that the most egregious and visible disjuncture in the current regimes—the gap between interstate and intrastate access rates—will not be resolved for years, if ever.

Furthermore, making state-determined TELRIC rates the foundation of all intercarrier rates would almost certainly re-open the currently dormant debate over the proper components of the TELRIC methodology itself. There is substantial disagreement in the industry over many fundamental aspects of TELRIC, and the Commission has an open rulemaking proceeding to reconsider several aspects of that methodology. Adoption of the CBICC plan would renew pressure to reconsider TELRIC itself, which would only lead to additional multi-year litigation and debilitating uncertainty hanging over the industry. The ICF plan avoids these problems entirely.

Western Wireless. Western Wireless's proposal seeks to eliminate rate-of-return regulation for all ILECs, to base all universal service support on forward-

looking costs, and to ensure portability of all universal service funding to "competitive" ETCs, specifically wireless carriers.[106] CTIA also submitted a brief list of broad principles that is largely consistent with Western Wireless's position and which also incorporates these goals.[107]

These pet projects of Western Wireless go well beyond the scope of what the Commission needs to accomplish in this proceeding. ICF members are concerned that if this proceeding is expanded to include the issues of whether to base rural carrier universal service support on forward-looking costs, or whether to eliminate rate-of-return regulation, the reforms of intercarrier compensation that are urgently needed will be further delayed. Ironically, the ICF proposal itself—by creating a rate structure that eliminates the LEC's ability to leverage its terminating bottleneck and by putting market discipline on the recovery of both origination and termination costs—would go a long way toward meeting the goals underlying the Western Wireless proposal, without unduly expanding or derailing this proceeding into lengthy litigation over issues that can be resolved separately.

D. The Other Plans Would Not Adequately Address or Protect Universal Service.

The other reform proposals are especially deficient when it comes to universal service.

ARIC. The ARIC proposal would actually harm rural customers by maintaining both originating access charges and significant rate disparities among LECs,

---

[106] *E.g.*, Western Wireless proposal at 4, 15, 18.

[107] CTIA principles at 1-3.

which would frustrate the rate averaging and rate integration goals of the 1996 Act.[108] Already, nationwide long distance providers are withdrawing from rural America, and access rate disparities create disincentives to marketing the most aggressive long distance pricing plans in rural America. By failing to solve this problem, the ARIC proposal would consign rural America to a future of continued small local calling areas, high toll rates, and less competition. Moreover, by subjecting all traditional dial-up ISP service to per-minute access charges,[109] both proposals would substantially increase the cost of access to the Internet for millions of Americans. Rural consumers would suffer the greatest harm, because it is in rural areas that access charges are highest.[110]

On the contribution side, ARIC offers no solution to the difficult and increasingly acute deterioration of today's interstate revenue-based mechanism. Without such reform, the system will continue to destabilize and the competitive asymmetries between, for example, cable modem and DSL providers, will continue to plague the industry.

---

[108] 47 U.S.C. § 254(g).

[109] *E.g.*, ARIC proposal at 54 ("ISPs that carry voice traffic must pay exchange access to LECs for traffic terminated on LECs' networks."), 51 ("When an ISP's customer uses dial-up Internet service, the ISP owes the underlying network carriers exchange access"). ARIC has a provision that purports to preserve the ESP exemption for dial-up Internet access, but even a cursory examination reveals that provision to be not competitively neutral. ARIC would permit ISPs to purchase local exchange service from the ILEC, in lieu of paying access charges. ARIC proposal at 53. But if the ISP purchases local exchange service from a CLEC, the ISP would pay access charges to the ILEC in addition to whatever charges it paid the CLEC. *Id*.

[110] *See, e.g.*, Global Internet Policy Initiative, *Flat Rate versus Per Minute Charges for Telephone Service: The Relationship between Internet Access and Telephone Tariffs* at 3 (Dec. 4, 2001) ("[V]arious studies indicate that the type of telecommunications pricing that is used in connection with Internet access (*e.g.*, flat rate or metered pricing) greatly influences the growth of the Internet in a particular market."), *available at* http://www.internetpolicy.net/practices/perminutepricing.pdf.

EPG. The EPG proposal would also do nothing to preserve or enhance universal service. As a practical matter, the substantial implicit support flows that EPG would keep embedded in intercarrier rates would simply be unsustainable as competition develops. By proposing that all intercarrier compensation rates be reinitialized at interstate levels, EPG makes no pretense of seeking cost-based rates that could be sustained in an efficient market. While interstate access rate levels are generally lower than intrastate, there is no basis for a national finding that they perfectly represent the actual cost to any carrier of originating or terminating a call, particularly in light of the Commission's interim freeze, established in 2001, of the Part 36 category relationships and jurisdictional allocation factors for price cap carriers and the allocation factors only for rate-of-return carriers.[111]

On the contribution side, EPG (like ARIC) utterly ignores the crumbling of today's interstate telecommunications revenue-based system, making no reform proposal whatsoever.

CBICC. CBICC has essentially no plan to preserve universal service. All intercarrier rates would move to TELRIC – which would represent a substantial decrease in many intercarrier rates. CBICC says only that these decreases would be offset by a "capped increase in an end user charge, and the availability of USF funds in the unusual circumstance of the need to recover any remaining shortfall." *See* CBICC proposal at 2. CBICC has not calculated the increases in the end user charges that would be necessary under its plan, nor has it calculated the necessary increases to the USF (although it

---

[111] *Jurisdictional Separations and Referral to the Federal-State Joint Board*, Report and Order, 16 FCC Rcd 11382 (2001), at para. 9.

believes that only rural carriers would "possibly" need USF funding and such funding would last only long enough to phase in increased end user charges). And CBICC has no proposal to address the unsustainability of the current, revenue-based contribution system. By failing to provide for universal service support to offset reductions in intercarrier compensation revenues, the CBICC proposal risks "reverse rate shock" to the carrier, potentially impairing its ability to continue to provide service, invest in its network, and develop and deploy new and innovative services.

***Western Wireless*.** The Western Wireless proposal would eliminate ILEC intercarrier compensation revenues without concurrently either providing alternative avenues for recovery of this revenue or materially deregulating such recovery.[112] Its proposal would reduce all intercarrier compensation rates to zero over four years (longer for some rural carriers), while permitting limited SLC increases and transitioning universal service support levels to ones based on forward-looking economic costs, but without regard for the resulting consumer impact if carriers cannot provide service or invest in their networks subject to these constraints, or if the resulting revenues available are too low to attract competitive entry.

This aspect of the Western Wireless proposal is fundamentally irresponsible. ICF, by contrast, has carefully crafted a detailed USF proposal that is fully sufficient to preserve universal service. The Western Wireless proposal is merely another example of a narrow group trying to promote its own parochial interests—here, maximizing funding from the USF for rural competitive wireless providers (like Western

---

[112] Western Wireless plan at 2-3.

Wireless) while reducing and minimizing such funding for their competitors, the rural ILECs. The Commission should reject that approach in favor of the balanced ICF plan.

NASUCA. NASUCA would apparently create a new threat to universal service by maintaining existing SLC caps and *reducing* explicit universal service support in the face of any reductions in intercarrier compensation that result from its proposal.[113]

E. Several Of The Competing Proposals Are Unlawful

Core aspects of many of the competing plans would violate the Communications Act.

ARIC. To the extent ARIC's proposal contemplates preempting state commission rate structures and establishing a joint access charge rate setting process governed by federal rules, the scheme would violate Sections 2(b), 201, 202, 252, and 254 of the Communications Act.

First, while Section 251(b)(5) clearly provides the Commission with authority to preempt intrastate access regimes *in toto* in order to replace them with a uniform intercarrier compensation system based on bill-and-keep, Sections 2(b) of the Communications Act just as clearly reserves to the state commissions the authority to establish intrastate access rate structures and levels until such preemption occurs. It is axiomatic that, to achieve meaningful uniformity, every intrastate intercarrier compensation mechanism across the country must be made identical, not just to each other, but to the federal system as well. The ICF Plan proposes the only reform solution

---

[113] *Developing a Unified Intercarrier Compensation Regime* CC Docket No. 01-92, Letter from Philip F. McClelland, Senior Assistant Consumer Advocate to Marlene H. Dortch, Secretary Federal Communications Commission (filed Dec. 14, 2004), Attachment at 1.

that achieves this goal in a manner explicitly contemplated by the Communications Act, *i.e.*, replacement of the existing intrastate access rate structure with a new system based on the reciprocal compensation provisions of Section 251(b)(5) and using a pricing methodology based on bill-and-keep, as explicitly contemplated by Section 252(d)(2)(B)(i).

The ARIC proposal, in contrast, proposes to achieve even the limited aspects of uniformity it embraces through Commission rules requiring state commissions to adopt the Commission's federal Part 69 interstate access charge rules.[114] The Commission has no power to do that. Unless the Commission invokes its authority pursuant to Section 251(g) to terminate the interstate and intrastate access regimes, and thus acts pursuant to 251(b)(5), the Commission's Part 69 rules have always been and will be founded on its authority over interstate ratemaking conferred by Section 201 and 202, both of which are limited to the interstate sphere by Section 2(b). Absent exercise of its 251(b)(5) authority, the Commission may not breach the Section 2(b) fence, and especially may not do so simply to substitute its judgment, on a non-transitional basis, as to the proper intrastate access rate structure for that of the state commission.[115]

Second, the Commission may not delegate its Section 201 and 202 authority over interstate ratemaking to state commissions, as ARIC would propose.[116] The ICF Plan would replace intrastate access charges with a holistic intercarrier compensation regime pursuant to Section 251(b)(5), with offsetting revenue from SLCs

---

[114] ARIC proposal at 39.

[115] *See Louisiana PSC*, 476 U.S. 355 (1986).

[116] *USTA v. FCC*, 359 F.3d 554 (D.C. Cir. 2004).

and federal universal service support, and would not impermissibly delegate federal authority to the state commissions. To the extent that ARIC would instead give state commissions an essential role in approving rates to be charged in the interstate jurisdiction without terminating the interstate access charge regime and regulating pursuant to Sections 251(b)(5) and 252, it would impermissibly subdelegate the Commission's power to an outside party.[117]

Third, to the extent that the Commission would retain ultimate ratesetting authority over positive reciprocal compensation rates (*i.e.*, not based on bill-and-keep principles), the ARIC proposal would violate Section 252(d)(2)(A), at least with respect to traffic that is not also subject to the Commission's Section 201 authority. Section 252(d)(2)(A) reserves to the state commissions the authority to set positive reciprocal compensation rates, at least absent a national finding by the Commission that the "additional costs of termination" are *de minimis*.[118] Although the Commission has clear authority to impose a national pricing rule adopting reciprocal compensation based on the bill-and-keep standard of Section 252(d)(2)(B)(i) for all traffic, the ARIC plan would instead provide the Commission with an essential (but impermissible) role in actually setting cost-based reciprocal compensation rates.

Further, the centerpiece of ARIC's universal service proposal is flatly unlawful. ARIC proposes a federally established, state-specific universal service mechanism (the State Equalization Fund "SEF"). ARIC contemplates that, in states that do not establish a SEF, the Commission would impose "a federally-mandated end user

---

[117] *Id.*

[118] 47 U.S.C. § 252(d)(2)(A)(ii).

Access Equalization Charge ("AEC") to make up the revenue shortfall" a LEC may experience as a result of intercarrier compensation rate changes. ARIC proposes that the AEC be collected "from all retail service providers for each of their working telephone numbers *in the state*."[119]

That mechanism is not authorized by the Communications Act. If it were considered a universal service mechanism, then it would violate Section 254, as it is not funded through equitable and nondiscriminatory contributions from all telecommunications providers nationwide, but rather is a state-specific mechanism funded through charges levied *only on retail service providers in that state*. If it were, instead, viewed as a federally-imposed end user charge for the direct recovery of intrastate costs, then it would violate the plain terms of Section 2(b),[120] absent a showing that the charge is part of a fundamental restructuring under the reciprocal compensation provisions of Section 251(b)(5) and the bill-and-keep savings clause of Section 252(d)(2)(B)(i).[121]

EPG. Although considerably less detailed than the ARIC proposal, the EPG proposal would also unify state and federal rates based on the federal Part 69 rate structure. Thus, it suffers from the same jurisdictional infirmities that plague the ARIC proposal. Nor do these federally mandated rate structures for intrastate services become

---

[119] ARIC proposal at 84 (emphasis added).

[120] 47 U.S.C. § 152(b).

[121] In contrast, the ICF explicitly recognizes the ICRM and TNRM are explicit universal service mechanisms created under Section 254 and funded through equitable and nondiscriminatory contributions from users of working telephone numbers and network connections nationwide.

any more lawful when they are eventually converted into capacity-based "port" and "link" charges.

EPG's essential universal service mechanism is unlawful. At the second stage of the EPG plan, all intercarrier rates would be reinitialized at interstate access charges, and the lost revenues would be replaced by an Access Restructure Charge (ARC). Although EPG asserts that the ARC is not intended to be an explicit universal service mechanism,[122] the ARC rate element clearly violates Sections 254(b)(5) and 254(e) of the Communications Act, which require federal universal service support to be specific, predictable, sufficient, and explicit. By establishing a bulk-billed, pooled rate element that is recovered through the NECA "access tariff" from carriers nationwide, the ARC represents an enormous implicit universal service subsidy, in that it cannot be associated with the costs of providing service incurred by any particular carrier on whose behalf it is collected.

Moreover, if the ARC is not a universal service mechanism, then the Commission plainly lacks authority to authorize its tariffing in the federal jurisdiction. EPG has identified no source of authority in the Communications Act that would allow the Commission to impose such a charge for the recovery of intrastate costs and, indeed, there is none.

To the extent that the ARC would be properly classified as a universal service support mechanism—as ICF believes it is, because the ARC is designed to permit recovery of carrier costs that, in EPG's judgment, cannot otherwise be recovered consistent with the affordability and reasonably comparability criteria of Section

---

[122] EPG proposal at 22-23.

254(b)(1) and 254(b)(3)—it violates Section 254. Specifically, it would violate both the plain terms of Section 214(e), and the competitive neutrality principle recognized under Section 254(b)(7),[123] because EPG would expressly and permanently limit eligibility for all ARC support to rural ILECs.

The EPG proposal regarding mislabeled or unlabeled traffic[124] would require the Commission to engage in patently arbitrary and capricious decisionmaking. For mislabeled or unlabeled traffic, EPG asks the Commission to impose the highest applicable rate on transiting carriers, which have no control over the labeling of traffic. EPG essentially asks the Commission to impose a punitive charge on an innocent party, with no grounds for punishment and no beneficial deterrence effect. Because the Commission could offer no rational explanation for imposing such punitive charges, the EPG proposal must be rejected. *See Environmental Defense Fund, Inc. v. Costle*, 657 F.2d 275, 283 (D.C. Cir. 1981) (to discharge its duty satisfactorily, an agency must at least engage in "reasoned decisionmaking").

---

[123] *Federal-State Joint Board on Universal Service*, First Report and Order, 12 FCC Rcd 8776, 8801 (1997), at ¶ 47 (subsequent history omitted).

[124] *See* EPG proposal at 17.

CONCLUSION

For the foregoing reasons, the Commissions should adopt the ICF Plan for network interconnection, intercarrier compensation, and universal service reform without modification and without delay.

Respectfully submitted,

THE INTERCARRIER COMPENSATION FORUM

Gary M. Epstein
Richard P. Bress
Richard R. Cameron
Alexander Maltas
LATHAM & WATKINS LLP
555 Eleventh Street, N.W., Suite 1000
Washington, D.C. 20004
(202) 637-2200

May 23, 2005

Counsel for the Intercarrier Compensation Forum

Appendix A

APPENDIX A- The ICF Plan Is Consistent with Existing Law

The ICF Plan as a whole, as well as each of its component parts, is consistent with existing law and the Commission has jurisdictional and substantive authority to implement the Plan in its entirety.

A. The Commission Has Full Jurisdiction Under the Communications Act, as Amended by the 1996 Act, to Establish Uniform Intercarrier Compensation Rules for All Classes of Traffic

Section 201(b) of the Communications Act authorizes the Commission to "prescribe such rules and regulations as may be necessary in the public interest to carry out the provisions of this Act." As the Supreme Court confirmed in *Iowa Utilities Board*, the Commission's section 201(b) rulemaking jurisdiction is not limited to jurisdictionally interstate matters covered elsewhere in section 201. Instead, it extends to *all* provisions of the Communications Act, including the provisions added by the Telecommunications Act of 1996 that encompass matters that, before 1996, fell within the exclusive jurisdiction of the states.[1] It is thus undisputed that the Commission may adopt rules implementing section 251(b)(5) and the other statutory provisions governing carrier interconnection with respect to all traffic—interstate and intrastate—within the scope of those provisions. This authority permits the Commission to implement the ICF Plan's comprehensive approach to intercarrier compensation for any exchange of telecommunications traffic.

Congress drafted section 251(b)(5) expansively to bring national consistency to questions of intercarrier compensation. By its terms, this provision extends to all

---

[1] *AT&T Corp. v. Iowa Utils. Bd.*, 525 U.S. 366, 377-86 (1999).

compensation issues relating to the transport and termination of "telecommunications" involving any local exchange carrier. The breadth of that language is significant in three principal respects. *First*, and perhaps most important, section 251(b)(5) makes no distinctions among traffic on the basis of jurisdiction ("local," "toll," "intrastate," "interstate") or service definition (*e.g.*, "exchange access," "information access," or "exchange service"). All such traffic is plainly "telecommunications." In its *ISP Remand Order* in 2001, the Commission was thus entirely correct in concluding that "[w]e were mistaken [in the *Local Competition Order*] to have characterized" section 251(b)(5) as limited to local traffic, given that "'local' . . . is not a term used in section 251(b)(5) or section 251(g)."[2] The D.C. Circuit left this conclusion intact on review, although it took issue with other aspects of the *ISP Remand Order*.[3]

If it had wished, of course, Congress could have limited the scope of this provision to "local telecommunications," to "telecommunications that originate and terminate within the same local calling area," or to "telecommunications handed off from one LEC directly to another LEC." But Congress included no such limitations on the scope of section 251(b)(5). Instead, it drafted section 251(b)(5) broadly to address all "telecommunications," the most expansive of the statute's defined terms.[4] Despite the clarity of this statutory language, some continue to argue that the Commission's jurisdiction to implement section 251(b)(5) extends only to "local" traffic and that the Commission thus lacks authority under that provision to address intercarrier

---

[2] *See ISP Remand Order* at 9167, 9172 ¶¶ 34, 45.

[3] *See WorldCom, Inc. v. FCC*, 288 F.3d 429 (D.C. Cir. 2002).

[4] *See* 47 U.S.C. § 153(43).

compensation issues relating to any category of traffic that is deemed to be neither "local" nor "interstate." This misguided effort to carve up the Commission's rulemaking authority on the basis of such legacy jurisdictional categories is not just irreconcilable with the plain language of section 251(b)(5), but strikingly similar to the unavailing attacks in the 1990s on the Commission's jurisdiction to implement sections 251 and 252 more generally. Here, as in that context, the attempt to "produce[] a most chopped-up statute" along jurisdictional lines is flawed both because it violates the statutory text and because it is "most unlikely that Congress created such a strange hodgepodge."[5]

Second, as the Commission has further found, section 251(b)(5) applies not just to the exchange of traffic between two LECs, but more broadly to the exchange of any traffic involving a LEC at one end.[6] In other words, although the obligation to establish reciprocal compensation arrangements for the transport and termination of telecommunications falls on LECs, Congress did not limit to other LECs the class of potential *beneficiaries* of that obligation.

Third, as the Commission has further indicated, section 251(b)(5) covers intercarrier compensation issues on the originating end of a call as well as the terminating end, even though it explicitly addresses only the "transport and termination of telecommunications." As the Commission recognized in the *Local Competition Order*,

---

[5] *Iowa Utils. Bd.*, 525 U.S. at 381 n.8.

[6] *See Local Competition Order* at 16016 ¶ 1041 ("Although section 251(b)(5) does not explicitly state to whom the LEC's obligation runs, we find that LECs have a duty to establish reciprocal compensation arrangements with respect to local traffic originated by or terminating to *any* telecommunications carriers," including non-LEC CMRS providers) (emphasis added). Where Congress intended LECs' 1996 Act obligations to run only to a limited class of carriers, it did so explicitly. *See, e.g.*, 47 U.S.C. § 251(b)(3) ("The duty to provide dialing parity to competing providers of telephone exchange service and telephone toll service. . . .").

because section 251(b)(5) provides for intercarrier compensation only for termination of traffic and does not authorize charges for originating traffic, LECs could no longer charge CMRS providers or other carriers for LEC-originated traffic.[7] Thus, with the exception of pre-1996 Act compensation rules temporarily grandfathered by section 251(g), section 251(b)(5) is properly read to bar carriers from imposing any charges, including access charges, for the costs of originating traffic.

Because the statutory language itself compels the conclusion that the Commission's section 251(b)(5) authority extends to *all* telecommunications involving a LEC, the Commission would face formidable litigation risks were it now to reverse course yet again on the scope of section 251(b)(5). Indeed, as the D.C. Circuit recently admonished, "[e]ven under the deferential *Chevron* standard of review, an agency cannot, absent strong structural or contextual evidence, exclude from coverage certain items that clearly fall within the plain meaning of a statutory term."[8] The statutory context in which the D.C. Circuit enforced that principle is closely analogous to the statutory context here. Just as the court applied that principle to reject the Commission's "argument that long distance services are not 'telecommunications services'" for purposes of section 251(d)(2), so too is the Commission barred from finding that particular categories of "telecommunications" do not *count* as "telecommunications" for purposes of section 251(b)(5).

Were there any remaining question about the Commission's jurisdiction to address all telecommunications under section 251(b)(5), including access traffic, it would

---

[7] *Local Competition Order* at 16016 ¶ 1042.

[8] *USTA v. FCC*, 359 F.3d 554, 592 (D.C. Cir. 2004).

be resolved by section 251(g). That provision singles out access traffic for special treatment and temporarily grandfathers the pre-1996 rules applicable to such traffic, including rules governing "receipt of compensation."[9] There would have been no need for Congress to have preserved those compensation rules against the effects of section 251 if section 251(b)(5) did not in fact address the "receipt of compensation" for the traffic covered by section 251(g)—*i.e.*, access traffic. Because Congress is presumed not to have wasted its breath, the only sensible interpretation of section 251(g) confirms what section 251(b)(5) already makes clear on its face: that intercarrier compensation for all access traffic falls within the broad scope of the Commission's jurisdiction to implement section 251.

In a footnote of the *ISP Remand Order*, the Commission obliquely suggested that "ambiguity" in the scope of "telecommunications" might support a construction that *intrastate* access traffic falls outside of section 251(b)(5).[10] As noted, however, there is no such ambiguity: the statutory definition of "telecommunications" straightforwardly encompasses all access traffic. Moreover, there is no basis for the apparent policy concern that motivated the Commission to look for ambiguity in this unambiguous language—*i.e.*, a concern that (i) section 251(g) preserves only the *interstate* access charge regime (until the adoption of superseding Commission regulations) but not the parallel intrastate access regime and (ii) Congress should be presumed not to have intended to have undercut the latter regime immediately upon enacting the 1996 Act.[11]

---

9 47 U.S.C. § 251(g).

10 *See ISP Remand Order* at 9168 ¶ 37 n.66.

11 *See id.*

No less than its interstate counterpart, the intrastate access charge regime derives from the 1982 AT&T consent decree and the subsequent GTE decree.[12] Contrary to the Commission's apparent belief, therefore, the intrastate access regime falls squarely within the ambit of section 251(g), which grandfathers "equal access and nondiscriminatory interconnection . . . obligations (including receipt of compensation) . . . under any court order, consent decree," or FCC order. Indeed, it would have been perverse for Congress to have authorized the Commission to reform intercarrier compensation rules relating to "local" and "interstate" traffic but *not* the rules applicable to the one class of traffic—intrastate access—that is subject to the *highest* above-cost charges and that is generally thought to be most laden with unsustainable implicit support.

---

[12] Before 1982, compensation for interexchange access was generally derived through an AT&T-administered system of settlements and division of revenues. Second Supplemental Notice of Inquiry and Proposed Rulemaking, *MTS and WATS Market Structure*, 77 F.C.C.2d 224, 227-28, 234 ¶¶ 15-19, 47 (1980). The AT&T consent decree replaced that system with a regime of federal *and* intrastate access charges. *See United States v. AT&T Co.*, 552 F. Supp. 131, 227, 233 (D.D.C. 1982); Third Report and Order, *MTS and WATS Market Structure*, 93 F.C.C.2d 241, 246 ¶ 11 (1983). The court order accompanying the consent decree made clear that the decree required access charges to be used in both the interstate and intrastate jurisdictions: "Under the proposed decree, state regulators will set access charges for intrastate interexchange service and the FCC will set access charges for interstate interexchange service." *AT&T*, 552 F. Supp. at 169 n.161. Thus, both interstate and intrastate access charges were borne of the same "consent decree," and both are preserved under section 251(g). There is also no evidence in the legislative history that Congress intended to treat intrastate access charges any differently, for grandfathering purposes, from interstate access charges. To the contrary, the House Conference Report broadly states that "the substance of this new statutory duty" under section 251(g) "shall be the equal access and nondiscrimination restrictions and obligations, including receipt of compensation, that applied to the local exchange carrier immediately prior to the date of enactment, *regardless of the source*." H.R. CONF. REP. NO. 104-458, at 123 (1996) (emphasis added).

In any event, even if section 251(g) were read *not* to grandfather intrastate access charges, that reading would raise no pragmatic concerns about the broad scope of section 251(b)(5), for the Commission could still exercise its well-established authority to impose interim rules ensuring a smooth transition to a new regulatory regime. Indeed, in a variety of contexts, and particularly in matters of intercarrier compensation, the courts have long upheld the Commission's expansive authority to take reasonable transitional measures needed to protect the industry from sudden disruptions.[13] The Commission's authority to adopt similar measures to manage the transition from access charges to a unified section 251(b)(5) regime forecloses any claim that Congress must have meant to exclude intrastate access charges permanently from the scope of section 251(b)(5). And this same authority permits the Commission to adopt the ICF Plan's proposed transition from the present schemes of intercarrier compensation to a unified system based on bill-and-keep principles.

B. The Commission Has Substantive Authority to Impose Bill and Keep for All Telecommunications Traffic and to Impose the ICF Plan's Proposed Transition from Current Rates to Bill and Keep

The Commission not only has *jurisdiction* to impose a unified intercarrier compensation system for all traffic, but also the authority to prescribe a transition to bill and keep in particular as the substantive compensation rule, even for "unbalanced" traffic subject to the pricing rules of sections 251(b)(5) and 252(d)(2).

In the *Local Competition Order*, at the same time that the Commission erroneously limited the scope of section 251(b)(5) to local traffic, it also found—more as

---

[13] *See, e.g.*, *CompTel v. FCC*, 309 F.3d 8, 15 (D.C. Cir. 2002); *CompTel v. FCC*, 117 F.3d 1068, 1073-75 (8th Cir. 1997).

a matter of policy than of statutory interpretation—that bill and keep was inappropriate for unbalanced traffic.[14] In the present context of comprehensive intercarrier compensation reform of *all* traffic, including access traffic, the Commission now should focus more carefully on the breadth of its statutory authority and reach the contrary conclusion—namely, that the text of section 252(d)(2) permits the Commission to order bill and keep for all traffic, including unbalanced traffic.[15]

As an initial matter, section 252(d)(2)(A) directs the Commission and the states (i) to "provide for the mutual and reciprocal recovery by each carrier of costs associated with the transport and termination on each carrier's network facilities of calls that originate on the network facilities of the other carrier," and (ii) to "determine such costs on the basis of a reasonable approximation of the additional costs of terminating such calls." This language is perfectly consistent with a regime, such as bill and keep, in which each carrier is afforded an opportunity for "recovery" of those costs from its own end users.[16]

If there were any question on this point, it would be answered by the "bill-and-keep savings clause." Section 252(d)(2)(B)(i) expressly authorizes all regulatory "arrangements that afford the mutual recovery of costs through the offsetting of reciprocal obligations, including arrangements that waive mutual recovery (such as bill-and-keep arrangements)." Bill and keep, as structured in the ICF Plan, entitles carriers to

---

14 *See Local Competition Order* at 16054-55 ¶¶ 1111-12.

15 *See WorldCom*, 288 F.3d at 434.

16 *See Local Competition Order* at 16055 ¶ 1112 ("bill-and-keep arrangements that lack *any* provisions for compensation do not provide for recovery of costs") (emphasis added).

the "mutual recovery of costs" by permitting them to recover those costs through end user charges and, where necessary, universal service. As the legislative history confirms, this clause thus permits "a range of compensation schemes, such as an in-kind exchange of traffic without cash payment (known as bill-and-keep arrangements)."[17] Importantly, the D.C. Circuit has already indicated its support for the same conclusion, noting the "non-trivial likelihood that the Commission has authority to elect" a bill-and-keep regime for section 251(b)(5) traffic under the terms of section 252(d)(2)(B)(i), which the court specifically cited.[18] Although section 252(d)(2), like the 1996 Act as a whole, "is in many important respects a model of ambiguity or indeed even self-contradiction," Congress "is well aware that the ambiguities it chooses to produce in a statute will be resolved by the implementing agency."[19] Here, the Commission can and should resolve any ambiguity in this statutory language in favor of an appropriately robust construction of the bill-and-keep savings clause.

Reading section 252(d)(2) to preserve the Commission's discretion in this respect does *not* reduce the pricing standards of section 252(d)(2) to surplusage. That provision is properly understood to require the Commission to choose, for all traffic within the scope of section 251(b)(5), *either* bill and keep, so long as carriers may recover their costs from end users directly (or, where appropriate, from universal service support), *or* a genuinely cost-based CPNP regime. Section 252(d)(2) still precludes *non*-cost-based compensation rules as well as arrangements (common before 1996) under which an

---

17 S. REP. NO. 104-230, at 120 (1996).

18 *See WorldCom*, 288 F.3d at 434.

19 *AT&T Corp. v. Iowa Utils. Bd.*, 525 U.S. at 397.

originating carrier charges a *terminating* (or intermediate) carrier for handing off calls to it. And the Commission's choice of bill and keep rather than a CPNP rule is particularly reasonable now, since eight years of experience have shown that CPNP creates the potential for serious market distortions and that it is too costly (if possible at all) to ensure "perfect" cost-based rates. The Commission is thus more than free to revisit and reject its unelaborated assumption in the *Local Competition Order* that Congress meant to lock in those distortions forever through the relevant statutory language.[20]

In addition, as the D.C. Circuit further suggested in citing the bill-and-keep savings clause as a basis for remanding but not vacating the *ISP Remand Order*, the Commission would not overstep any *jurisdictional* boundaries established in *Iowa Utilities Board* by prescribing bill and keep for all traffic. Under *Iowa Utilities Board*, the Commission has plenary jurisdiction to make very specific methodological decisions about the implementation of section 251, and a choice of bill and keep is precisely such a decision, even though it has the effect of producing specific outcomes in matters of intercarrier compensation. Indeed, the Commission cannot *avoid* prescribing the circumstances in which bill and keep is appropriate if it is to play its statutorily assigned role in interpreting the scope of the bill-and-keep savings clause of section 252(d)(2).

For all of these reasons, sections 252(d)(2) and 251(b)(5) pose no obstacle to an FCC-mandated transition to bill and keep for all traffic. Finally, this transition to bill and

---

[20] *See Chevron U.S.A., Inc. v. Natural Res. Def. Council*, 467 U.S. 837, 863-64 (1984) (agency is free to change mind on matters of statutory interpretation); *Smiley v. Citibank*, 517 U.S. 735, 742 (1996) ("[C]hange is not invalidating, since the whole point of *Chevron* is to leave the discretion provided by ambiguities of a statute with the implementing agency."); *see also Independent Bankers Ass'n v. Farm Credit Administration*, 164 F.3d 661, 668 (D.C. Cir. 1999).

keep need not—and, under the ICF Plan, would not—occur in one step. As noted, the Commission has ample authority to avoid sudden industry disruptions by adopting the Plan's proposal for a transitional glide-path from existing intercarrier compensation rates to a comprehensive bill-and-keep regime.[21]

C. The Commission Has Authority Under Section 251(b)(5) and Section 254 to Raise the SLC and Establish the ICRM and TNRM, Even Though Those Mechanisms Will Cover Some Costs Currently Booked as "Intrastate"

The analysis above establishes that the Commission has authority to prescribe compensation rules ensuring the mutual recovery of carriers' costs. And it confirms that the Commission may adopt a bill-and-keep regime for that purpose. This authority necessarily includes a corollary authority to take the steps needed to ensure that, despite the transition to bill and keep, carriers actually have reasonable opportunities to recover the relevant costs, as section 252(d)(2) requires. The SLC increase and the establishment of the ICRM and TNRM constitute a clearly permissible exercise of that authority. Indeed, the Commission not only has the *authority* to establish mechanisms that provide adequate cost recovery opportunities and universal service funding through SLC increases and new explicit universal service mechanisms, but an *obligation* to do so if it eliminates the existing intercarrier compensation regimes. Precisely because section 252(d)(2) entitles carriers to the opportunity to recover their costs, the Commission could not adopt a transition to bill and keep unless it establishes alternative support mechanisms that, like these, afford carriers that opportunity.

---

[21] *See CompTel*, 117 F.3d at 1074-75; *see also CompTel*, 309 F.3d at 15 ("the Commission can justify a policy by reference to the purposes of avoiding disruption pending a broader reform").

The legacy jurisdictional separations regime, which divides costs and their recovery into distinct interstate and intrastate "jurisdictions," poses no obstacle to the Commission's adoption of these aspects of the ICF Plan. First, the ICRM and TNRM are just new support mechanisms that, like existing funding programs for rural and non-rural carriers, the Commission may adopt pursuant to its general universal service powers, including its authority to "defin[e] . . . the services that are supported by Federal universal service support mechanisms."[22] In a range of contexts, the Commission has long provided *federal* funds to cover at least a portion of costs assigned to the *intrastate* side of the cost ledger.[23] That, for example, is the central and explicit function of the high cost fund for non-rural carriers.[24] If there were any legal problem with this practice from a jurisdictional separations perspective, which there is not, that same problem would afflict the very foundations of this Commission's existing universal service programs.[25]

---

22 47 U.S.C. § 254(a)(2).

23 *See* Report and Order, *Federal-State Joint Board on Universal Service*, 12 FCC Rcd 8776, 8807 ¶ 56 (1997) (including intrastate services among those services supported by federal universal service mechanisms); *TOPUC I*, 183 F.3d at 444 (recognizing that the Commission provides federal universal service funds to support intrastate rate discounts to schools and libraries).

24 *See generally* Order on Remand, Further Notice of Proposed Rulemaking, and Memorandum Opinion and Order, *Federal-State Joint Board on Universal Service*, 18 FCC Rcd 22559 (2003); Ninth Report and Order and Eighteenth Order on Reconsideration, *Federal-State Joint Board on Universal Service*, 14 FCC Rcd 20432 (1999) (subsequent history omitted).

25 The Commission has never adhered strictly to the most "accurate" apportionment between the two jurisdictions. In the past, the Commission has used the separations process to shift some intrastate costs to the interstate jurisdiction in an effort to provide implicit universal service support from interstate to intrastate services. Even before Congress enacted section 254, the D.C. Circuit upheld these Commission policies on universal service grounds. *See National Ass'n of Regulatory Utility Comm'rs v. FCC*, 737 F.2d 1095, 1105 n.6 (D.C. Cir. 1984) ("*NARUC*") (relying on 47 U.S.C. § 151); *MCI Telecomm. Corp.* v. *FCC*, 750

For the same reasons, the Commission may lawfully raise the SLC to cover a portion of the costs formerly covered by intrastate access charges as an exercise of its plenary authority to ensure a sustainable and explicit universal service system. It is not possible to replace all of the implicit support embodied in intercarrier compensation with explicit federal support, because doing so would necessitate unsustainable increases to the size of the fund and would impose a tremendous burden on all providers. Nor would that approach be appropriate even if it were possible, because at least some portion of access charges is designed to recover the costs that each LEC actually bears in providing access. Since the Commission cannot unravel, in each instance, which portion is implicit support and which is compensation for the costs of serving a given end user, the only reasonable and sustainable approach is to permit carriers both to increase end user charges via the SLC—up to the caps contemplated by the Plan to the extent competition permits—and, where appropriate, to obtain additional universal service funding through the ICRM/TNRM mechanisms. The SLC increases contemplated by the Plan are thus a key factor in eliminating implicit support and transitioning to a uniform and rational bill-and-keep environment for intercarrier compensation. As discussed in Part II of this brief, moreover, this bill-and-keep approach to cost recovery—unlike existing carrier-to-carrier cost-recovery mechanisms—will permit competition to keep overall end user rates at lower, efficient levels.[26]

F.2d 135, 140-41 (D.C. Cir. 1984). All of this underscores that, as the Supreme Court has noted, "extreme nicety is not required" when allocating costs. *Smith v. Illinois Bell Tel. Co.*, 282 U.S. 133, 150 (1930).

[26] As the courts have consistently held, the Commission may restructure end user charges, including the SLC, to produce more efficient mechanisms for the recovery of network costs that would otherwise be recovered inefficiently through

Finally, the Commission would fully respect the states' own policy interests by adopting federal support programs to ensure adequate recovery of costs on the intrastate side of the cost ledger.[27] The federal revenue measures contemplated by the ICF Plan are, indeed, the very opposite of an unfunded mandate. Rather than forcing the states to assume a new burden, the Commission would achieve the goals of section 254 by lifting the states' existing obligation to arrange for recovery of certain network costs and by shifting to itself the burden of covering those costs through the combination of the new federal mechanisms and the other sources of revenue provided by the Plan. Finally,

---

intercarrier compensation charges. Nothing in section 254(k) is to the contrary. *See, e.g.*, *TOPUC II*, 265 F.3d at 323-24; *Southwestern Bell Tel. Co. v. FCC*, 153 F.3d 523, 558-59 (8th Cir. 1998); *see also NARUC*, 737 F.2d at 1111-15 (holding that the Commission has power to impose flat-rate end user charges).

27 To establish a uniform bill-and-keep regime, the Commission need not refer to the Joint Board its decisions to increase the SLC or replace interstate and intrastate switched access revenues. First, adoption of the Plan does not require a referral to a *separations* Joint Board. While changes in the separations rules must be referred to the Joint Board pursuant to 47 U.S.C. § 410(c), the Plan leaves intact the existing separations rules concerning allocation of costs and merely changes the universal service support mechanism to provide for the *recovery* of necessary access revenues through an increased SLC. *See TOPUC II*, 265 F.3d at 324 (distinguishing between cost recovery and cost allocation). Moving cost recovery to the federal SLC does not change the allocation of affected costs, and there is no other reason why federal universal service payments cannot be made to cover costs allocated to the intrastate jurisdiction. For example, section 36.631 of the Commission's rules provides federal universal service support to rural LECs on a sliding scale, based on their average loop costs, to cover a percentage of loop costs that are allocated to the intrastate jurisdiction. *See* Fourteenth Report and Order, *Federal-State Joint Board on Universal Service*, 16 FCC Rcd 11244, 11251-52 ¶ 13 n.19 (2001); *see also Crocket Tel. Co. v. FCC*, 963 F.2d 1564, 1570 (D.C. Cir. 1992). Similarly, section 254(a) does not require the Commission to refer the Plan to a *universal service* Joint Board. Indeed, even if the Plan were interpreted to require a change in the definition of universal service, "[t]he statute requires consultation with the Joint Board for only the initial implementation of § 254's universal service requirement. *See* 47 U.S.C. § 254(a)(1). Any consultation afterwards is permissive." *TOPUC II*, 265 F.3d at 328 n.7.

nothing in this scheme involves federal intrusion into the states' central prerogative to set their own retail rates.

The federal support programs the Plan creates are fully consistent with the requirements of section 254 of the Act. The ICRM and TNRM are explicit and predictable support mechanisms that will promote affordable quality services, including advanced and information services, across the nation. The funds are also equitable and fully portable for all non-CMRS ETCs. While in rural areas, eligibility is restricted to wireline LECs, that limitation is necessary as a transitional safeguard for rural universal service. Non-CMRS ETCs (who generally are all wireline LECs) in high cost rural areas are uniquely dependent on the support access charges now provide, and the shift to bill and keep therefore will be more disruptive to these carriers as compared to others. In order to preserve low-cost, high quality service in rural areas as rural carriers adjust to the new support mechanism, the Plan reserves the new rural fund for non-CMRS ETCs. The Plan thus would exclude CMRS carriers, who are now generally precluded from tariffing and therefore from relying on access charges—and thus will be less affected by their elimination. This limitation is discrete: it applies only to the TNRM; the ICRM is available to all carriers that qualify as ETCs; and the Plan does not affect eligibility for any pre-existing universal support funding. And the Plan further provides that the Commission will re-examine the TNRM eligibility restriction in 2013, when the same transitional concerns may no longer apply. The Commission has ample authority to

implement such a discrete, interim eligibility restriction as an appropriate transitional measure.[28]

D. The Commission Has Full Authority To Adopt the ICF Plan's Contribution Methodology for Universal Service

The Commission's universal service authority derives from two principal sources: (i) its general mandate under section 1 of the Communications Act to "regulat[e] interstate . . . commerce in communication by wire and radio so as to make available, so far as possible, to all the people of the United States . . . a rapid, efficient, nationwide, and world-wide wire and radio communication service with adequate facilities at reasonable charges,"[29] and (ii) its mandate under section 254 to ensure that "[e]very telecommunications carrier that provides interstate telecommunications services shall contribute, on an equitable and nondiscriminatory basis, to the specific, predictable, and sufficient mechanisms . . . to preserve and advance universal service."[30] The Plan will replace the unsustainable revenue-based contribution mechanisms in effect today with a more durable methodology that assesses contributions on the basis of telephone numbers and connections to a public network. The Commission has full authority under sections 1 and 254 to make this long-overdue change.

First, the Plan's numbers/connections-based contribution methodology fully comports with the Commission's obligation under section 254(d) to require

---

28 *See, e.g.*, *CompTel*, 309 F.3d at 14-15;*CompTel*, 117 F.3d at 1073-75.

29 47 U.S.C. § 151; *see NARUC*, 737 F.2d at 1108 (recognizing that section 1 contains a "prominen[t] . . . universal service objective"); *Rural Tel. Coalition v. FCC*, 838 F.2d 1307, 1315 (D.C. Cir. 1988) (declaring that "universal service is an important FCC objective" and establishment of a Universal Service Fund is "within the Commission's statutory authority" under section 1).

30 47 U.S.C. § 254(d).

telecommunications carriers to contribute to universal service on "an equitable and nondiscriminatory basis." As discussed in Part I, the current revenue-based contribution methodology is both inequitable and unsustainable because it permits carriers to avoid or minimize their contribution obligations simply by choosing certain technologies, service configurations, or network architectures. The Plan meets the need for a new methodology by distributing the contribution burden broadly among the vast majority of telecommunications providers in a technology-neutral, non-discriminatory, and transparent manner.[31] LECs, traditional long-distance providers, wireless carriers, broadband providers, and VoIP providers that use telephone numbers will all be subject to the contribution obligation because each utilizes telephone numbers or provides connections to a public network (or both). And the Plan abolishes the artificial regulatory distinctions that today cause traditional IXCs to bear a disproportionately large share of the contribution obligation, even as their revenues fall and long distance traffic shifts to other networks.

The Plan's contribution methodology is also "equitable and nondiscriminatory." It is true that, like any reform to the contribution methodology, the Plan's approach

---

[31] The Commission plainly has authority to impose a contribution obligation on all providers that use numbers or connections, even if some of those are not traditional telecommunications carriers. Section 254(d) permissively authorizes the Commission to assess contributions on "[a]ny . . . provider of interstate *telecommunications* . . . if the public interest so requires." 47 U.S.C. § 254(d) (emphasis added). The Commission has already tentatively determined that an information service provider that owns the underlying transmission facilities on which packets are transmitted is providing telecommunications and therefore falls within the scope of the Commission's permissive contribution authority. *Wireline Broadband NPRM* at 3032-33 ¶¶ 24-25 & n.58; Report to Congress, *Federal-State Joint Board on Universal Service*, 13 FCC Rcd 11830, 11532-35 ¶ 66-70 & n.138 (1998).

would necessarily change the relative contribution burdens among different industry segments. For example, because assessments would no longer rest on revenues, a criterion not found in the Act, traditional IXCs would bear proportionally less of a burden than they do today. But to argue that this change makes the Plan's approach less "equitable" than the current regime incorrectly assumes that the particular burdens imposed by the present interstate-revenue-based scheme are the proper frame of reference. Because contribution obligations are ultimately passed through to consumers, the relevant question is not whether all industry segments share (in some indeterminate sense) exactly the same obligations, but whether competing providers of like services face comparable contribution burdens. Under the Plan, they do; under the current system, they do not.

Likewise, the Plan's exclusion of the handful of carriers that do not use numbers or connections is no less consistent with section 254(d)'s "every telecommunications carrier" contribution requirement than the contribution mechanism in place today. Under the Plan, every carrier that serves end users will contribute, since, with commercially insignificant exceptions, such providers will generally require some type of number or connection to reach customers. For example, independent long distance carriers will bear significant (albeit reduced) contribution obligations because, in today's all-distance environment, very few such carriers provide only transport service. Most of them also provide direct connections (such as private or special access lines) and telephone numbers (such as toll-free numbers) to various classes of customers. Further, the ICF contribution methodology itself applies to "every carrier" and does not carve out any technology and service type. *Every* carrier that provides a number or relevant connection

is required to contribute a specific amount.[32] Under the Plan, for example, a cable modem service provider and a DSL provider will be assessed the same number of units for every connection, thus eradicating a disparity that exists under the current funding rules.[33]

This Plan is also fully consistent with any jurisdictional limits that section 2(b) of the Communications Act places on the Commission's authority.[34] The Plan provides for a flat-rate assessment on connections that either are wholly interstate or, like special access lines, are used indivisibly for both inter- and intrastate purposes. The Commission

---

[32] Section 251(e) answers any questions that might arise about the Commission's authority to impose contribution obligations on providers that use telephone numbers even if they are not found to provide "telecommunications." Section 251(e) empowers the Commission to "administer telecommunications numbering" and grants it "exclusive jurisdiction over those portions of the North American Numbering Plan that pertain to the United States." 47 U.S.C. § 251(e)(1). As the Second Circuit has observed, section 251(e) grants the Commission broad license to use its plenary authority over numbering resources to achieve the basic goals of the Act, such as promoting competition and eliminating unreasonable discrimination. *See New York PSC v. FCC*, 267 F.3d 91, 102-06 (2d Cir. 2001) (Commission may require, over state public utility commission's objection, that all customers dial a ten-digit number to make local calls to ease the introduction of an area code overlay in New York City). Here, the assessment of a small USF fee associated with the provision of one or several NANP numbers would, as noted, advance the fundamental goals of universal service articulated under sections 1 and 254 of the Act, while at the same time promoting number conservation and efficient number utilization. *See generally* Report and Order and Further Notice of Proposed Rulemaking, *Numbering Resource Optimization*, 15 FCC Rcd 7574, 7578 ¶ 3 (2000) (noting the Commission's concern over "[t]he rapid depletion of numbering resources nationwide and the potential it creates for NANP exhaust").

[33] *See generally* S. REP. NO. 104-23, at 27-28 (1995) (explaining that "every carrier" language is intended to "require[] . . . carriers that concentrate their marketing of services or network capacity to particular market segments, such as high volume business users," to "contribute on an equitable and nondiscriminatory basis to the preservation and advancement of universal service" so as to "prevent distortion of competitive forces").

[34] 47 U.S.C. § 152(b).

has indisputable regulatory jurisdiction over such dual-use facilities.[35] And because the assessment would not vary with a carrier's intrastate revenues, it would not violate the Fifth Circuit's prohibition on assessments that are based on such revenues.[36]

E. The Commission Has Full Authority To Implement The ICF Plan's Interconnection Rules

The Plan establishes uniform intercarrier compensation rules with a transition to bill and keep for the termination of *all* traffic delivered to another carrier's "Network Edge" in a LATA. Under the Plan, CLECs will remain free, pursuant to section 251(c)(2), to interconnect at various physical points on an ILEC's network in addition to these Network Edges (which, in the case of ILECs, will generally be tandem switches). In recognition of the financial implications of each carrier's choice of physical interconnection points, however, CLECs that choose to deliver traffic to an ILEC at physical interconnection points *other* than the ILEC's designated Network Edge will be required to compensate the ILEC for "backhauling" that traffic from the chosen physical interconnection points to the relevant "edge" of the ILEC's network. (By definition under the Plan, upon conversion to bill and keep, the compensation that one carrier owes another when depositing traffic at the latter's Network Edge is zero.)

Of course, if a carrier lacks facilities of its own to deliver traffic to the Network Edge of the terminating carrier, it may lease dedicated capacity for this purpose on the transport facilities of other entities. Moreover, if the carrier is otherwise entitled to lease dedicated transport as an unbundled network element at TELRIC-based rates, nothing in

---

35 *NARUC*, 737 F.2d at 1111-16 (affirming the Commission's authority, even in light of section 2(b), to impose a per-line subscriber line charge, to support universal service, on dual-use equipment).

36 *TOPUC I*, 183 F.3d at 448.

the ICF Plan precludes it from doing so. The Plan simply provides that in the absence of such arrangements, a carrier that chooses to deliver traffic at a point other than the Network Edge of the terminating ILEC has the right to lease dedicated transport circuits from the ILEC as a "special access" service, currently subject to section 201 just and reasonable standards.

Thus, in the absence of independently available rights to lease transport as an unbundled network element from the ILEC pursuant to section 251(c)(3), the Plan provides that ILECs must be compensated when they use their own facilities to "backhaul" traffic to the relevant Network Edge from a separate point of handoff.[37] In the context of the comprehensive reform and competitively neutral compensation rules for *all* traffic contemplated by the Plan, the Commission can reasonably construe the category of "transport," for purposes of section 251(b)(5), as limited to the function of moving traffic from the designated Network Edge to the switch serving the called party. Under this construction, this limited backhaul function would fall outside the scope of section 251(b)(5)—and thus the pricing rules of section 252(d)(2)—and under current rules would be subject to the "just and reasonable" standard of section 201. The Commission likewise has authority to rule that an obligation to backhaul traffic under the Network Edge concept embodied in the Plan is not a function of section 251(c)(2) physical "interconnection" to which the pricing standards of section 252(d)(1) apply. The traffic does clearly fall, however, within the Commission's more traditional

---

[37] This backhaul function should be distinguished from the "interconnection transport" function set forth in the Plan. The latter function, and its associated pricing rules, apply only to interconnection arrangements between designated Network Edges.

jurisdiction under section 201 to regulate "mixed use" facilities (since these interconnection arrangements are designed for the exchange of all traffic, whether interstate or intrastate).[38]

F. The Commission May Require the Provision of Transit and Regulate Rates for Such Transit

The Commission's authority to prescribe transit rates is rooted in sections 201 and 251(a) of the Act. *First*, to the extent transit traffic is interstate, section 201 plainly authorizes the Commission to regulate it and to ensure that the charges are just and reasonable.[39] Indeed, the Commission has for years relied on its section 201 authority to require that LECs provide transit for traffic between an IXC and independent LECs, CMRS carriers, and others.[40] *Second*, section 251(a), which requires all telecommunications carriers to "interconnect directly or indirectly" with all other telecommunications carrier networks, authorizes the Commission to regulate *all* transit

---

38 Decision and Order, *MTS and WATS Market Structure, Amendment of Part 36 of the Commission's Rules and Establishment of a Joint Board*, 4 FCC Rcd 5660, 5660-61 ¶¶ 2, 6-7 (1989) (adopting separations procedures under which mixed use special access lines are assigned to the interstate jurisdiction when interstate traffic accounts for at least ten percent of the traffic carried on those lines); Memorandum Opinion and Order, *GTE Tel. Operating Cos.*, 13 FCC Rcd 22466, 22479-80 ¶¶ 23-25 (1998) (reaffirming that, under the Commission's mixed-use facilities rule, special access facilities are subject to federal regulation when more than ten percent of the traffic is interstate). *See generally Qwest Corp. v. Scott*, 380 F.3d 367 (8th Cir. 2004) (applying the mixed-use facilities rule).

39 47 U.S.C. § 201(a) (authorizing the Commission to require "through routes" between and among carriers for the transmission of traffic); 47 U.S.C. § 201(b) (requiring rates and practices to be just and reasonable).

40 *E.g.*, Memorandum Opinion and Order, *Elkhart Tel. Co. v. SWBT*, 11 FCC Rcd 1051, 1056-57 ¶¶ 34, 37 (1995); *see, e.g.*, Report and Order, *MTS and WATS Market Structure Phase III*, 100 F.C.C.2d 860 (1985).

traffic, including intrastate traffic.[41] Section 251(a) requires interconnection of all carriers, but expressly gives carriers the option of relying on *indirect* interconnection to accomplish that end. Direct interconnection between each carrier and every other would be neither efficient nor feasible. *Indirect* interconnection—*i.e.*, transiting—therefore is essential to ensure the nationwide interconnectedness Congress envisioned.

As the Commission has observed, the "fundamental purpose" of section 251(a) is to "promot[e] the interconnection of all telecommunications networks by ensuring that incumbent LECs are not the only carriers that are able to interconnect efficiently with other carriers."[42] *Indirect* interconnection thus plainly encompasses the provision by the "middle" carrier(s) of transit between the two indirectly interconnected carriers. Put another way, there must be an open pipe between two indirectly interconnected carriers in order for there to be indirect interconnection *at all*. And, in fact, the Commission has repeatedly recognized that transit *is* that open pipe and thus is a fundamental component of indirect interconnection.[43]

---

41 47 U.S.C. § 251(a)(1).

42 Fourth Report and Order, *Deployment of Wireline Services Offering Advanced Telecommunications Capability*, 16 FCC Rcd 15435, 15478 ¶ 84 (2001) ("*Collocation Remand Order"), aff'd sub nom. Verizon Telephone Cos. V. FCC,* 292 F.3d 903 (D.C. Cir. 2002); *see also Local Competition Order* at 15991 ¶ 997 (noting that "the [section 251] duty to interconnect directly or indirectly is central to the 1996 Act and achieves important policy objectives.").

43 Memorandum Opinion and Order, *Petition of WorldCom, Inc. Pursuant to Section 252(e)(5) of the Communications Act for Preemption of the Jurisdiction of the Virginia State Corporation Commission Regarding Interconnection Disputes with Verizon Virginia, Inc., and for Expedited Arbitration et al.*, 17 FCC Rcd 27039, 27101-02 ¶ 118 (2002) (finding that transit was key to WorldCom's "ability to interconnect indirectly with other carriers" and serve the "interests of all end users in connectivity to the public switched network."); Report and Order and Order on Remand and Further Notice of Proposed Rulemaking, *Review of the Section 251 Unbundling Obligations of Incumbent Local Exchange Carriers,* 18 FCC Rcd

Regulation of transiting pursuant to section 251(a) is perfectly consistent with the Commission's previous rulings that section 251(a) authorizes the Commission only to regulate the "physical linking of two networks."[44] In one case, for example, the Commission determined that 251(a) did not authorize it to require AT&T to order a CLEC's terminating access service. But, as the D.C. Circuit found in affirming the Commission's decision, the distinction the Commission drew between section 251(a) and the Act's "transport and termination" requirement does not spare any carrier from its section 251(a) obligation "to establish a physical connection with" other carriers.[45] As the court pointed out, despite AT&T's refusal in that case to send traffic to the plaintiff carrier—which was demanding extremely high terminating access charges—the two carriers were in fact interconnected, via indirect transit-based links provided by Southwestern Bell.[46]

Total Telecom thus supports the Commission's section 251(a) authority over transiting. The independent connections of AT&T and the plaintiffs to Southwestern Bell

---

16978, 17319-20 ¶ 534 n.1640 (2003) (subsequent history omitted) (noting that "transiting" is "a means of indirectly interconnecting with other . . . carriers for the purpose of terminating local and intraLATA traffic."); *Collocation Remand Order* at 15477-78 ¶¶ 83-84 (finding that the Commission has authority to require LECs to provision a cross connection between a CLEC and a competitive transport provider because that connection is essential to the indirect interconnection required under section 251(a)).

44 Memorandum Opinion and Order, *Total Telecomm. Servs. v. AT&T Corp.*, 16 FCC Rcd 5726, 5736-37 ¶ 23 (*Total Telecom Order*), *aff'd in relevant part, rev'd in part, AT&T v, FCC*, 317 F.3d 227 (D.C. Cir. 2003) (*Atlas Appeal)*. In the *Total Telecom Order*, the Commission relied on its earlier determination in the *Local Competition Order* at 15590 ¶ 176 ("We conclude that the term 'interconnection' under section 251(c)(2) refers only to the physical linking of two networks for the mutual exchange of traffic.").

45 *Atlas Appeal*, 317 F.3d at 235.

46 *Id.*

could satisfy section 251(a)'s indirect interconnection requirement only if Southwestern Bell in fact provided a link between the two carriers. The mere fact that two carriers connect with a third carrier may establish the *possibility* of interconnection, but section 251(a) requires actual interconnection, and that is accomplished only where the middle link—transit—is at least offered by that third carrier. Thus, the D.C. Circuit's decision should be read to stand for the proposition that the two indirectly connected carriers cannot be forced, under section 251(a), to *utilize* their interconnection by actually sending traffic to one another. But it cannot sensibly be read to foreclose the Commission's authority to regulate—on just, reasonable, and non-discriminatory terms under section 201—the provision of the essential middle link for indirect interconnection, for that interpretation would gut section 251(a)'s indirect interconnection provision of all meaning.

Appendix B

APPENDIX B

ICF MODEL DOCUMENTATION

Overview

The ICF has developed a Model to predict the results of implementation of the ICF Plan. To do so, it models the effect on individual companies across the nation, and aggregates these results to produce national figures. The Model estimates the amount of ILEC revenue that the ICF Plan would shift from switched access rate elements to subscriber line charges ("SLCs"). In addition, it estimates the size of the new universal service support mechanisms, the Intercarrier Compensation Recovery Mechanism ("ICRM") for non-CRTC ILECs and their competitors and the Transitional Network Recovery Mechanism ("TNRM") for CRTCs and their qualifying competitors. It shows the effect of this shift during each of the four annual steps of this transition, and at the conclusion of the SLC transition at Step 5. To do so, the Model estimates SLC rates and ICRM/TNRM support at each step, as well as remaining intercarrier compensation revenues, including tandem transit revenues, interconnection transport revenue for non-CRTCs, and terminating transport revenue for CRTCs.

The ICF used an earlier iteration of this Model to estimate the size of the new ICRM/TNRM mechanism at each step, as well as the per-unit assessment charge that would result from the new universal service contribution methodology it proposes.[1] The ICF has updated and refined its input data, as well as the Model itself, to produce a more current estimate of the impact of the ICF Plan. These updated national results are presented in this Appendix at pages 10-14.

Briefly, by Step 5, the ICF Plan would create roughly $2.744 billion in explicit universal service support by replacing support that is implicit in intercarrier charges today with explicit ICRM/TNRM support, increasing Lifeline support to permit continued waiver of the full SLC for Lifeline customers, and improvements to existing explicit support mechanisms. Of this support, as shown on page 15 of this Appendix, roughly 2/3 would flow to CRTCs.

In addition, the ICF proposes a new universal service contribution mechanism, based on unit-based assessments of working telephone numbers and network connections. As shown on page 16 of this Appendix, the Model demonstrates that the proposed increase in explicit support translates into a universal service assessment of $1.31 per month per unit, only a modest increase over the $0.93 per month per unit this methodology would produce if the Commission maintained explicit universal service support at today's levels.

---

[1] *Developing a Unified Intercarrier Compensation Regime*, CC Docket No. 01-92, Ex Parte Letter from Richard R. Cameron, Latham & Watkins LLP, to Marlene H,. Dortch, Secretary, Federal Communications Commission (filed Dec. 14, 2004).

Data Used in the Model

It is possible for an individual local exchange carrier to use its own company-specific data elements to model the impact of the ICF Plan on its company. Specifically, a LEC would need the following base period data inputs to use this Model:

- The primary residential and single line business SLC rate
- The non-primary residential SLC rate
- The multiline business SLC rate
- Primary residential and single line business demand
- Non-primary residential demand
- Multiline business demand
- Lifeline demand
- Interstate and intrastate switched access minutes
- Interstate and intrastate carrier common line revenue
- Interstate and intrastate PICC revenue
- Interstate and intrastate local switching revenue
- Interstate and intrastate common (tandem-switched) transport revenue
- Interstate and intrastate dedicated switched transport revenue
- Intrastate network interconnection revenue (NIC/RIC/TIC)
- The percent of ILEC common transport that would be charged tandem transit rates under the ICF Plan
- The expected tandem transit rate per MOU
- Projected interconnection transport revenue
- CRTC terminating transport MOU and expected CRTC terminating transport rate

These data elements, together with their sources, are shown in the chart on page 17 of this Appendix.

The ICF has used its Model to estimate the aggregated national result of implementation of its Plan. To do so, it used a combination of proprietary and publicly-available data sources, as follows:

For the most part, interstate revenues and volumes are from the ILECs' TRP (Tariff Review Plan) filings submitted on June 16, 2004. For price cap companies, demand volumes are for the 2003 base year, while revenues consist of July 1, 2004 proposed rates applied to the 2003 base year volumes. Data for the rate-of return (ROR) companies is prospective, with demand volumes and revenues for the July 1, 2004 to June 30, 2005 tariff year. Because some ROR companies file on a biannual basis and did not file TRPs in 2004, data was obtained from their June 2003 TRPs and is for the July 1, 2003 to June 30, 2004 tariff year. Some of the smaller ROR companies do not file TRPs, in which case their cost support data was obtained directly from the company. Intrastate data is generally obtained from the ILECs' ARMIS reports and by various approximations. Much of the data for SBC and Sprint was obtained directly from those companies.

There are essentially three categories of companies – rural, non-rural, and CLEC:

- Rural ILECs (or more specifically, CRTCs (Covered Rural Telephone Companies) as that term is defined in the ICF Plan), consist of the rate-of-return (ROR) companies plus the following price cap companies: Citizens, Iowa Telecom, Valor, Century Tel, and several Sprint companies. The ROR companies are modeled as a single entity, which consists of NECA and the other ROR companies, but does not include Puerto Rico Tel., which is included as part of GTE.

- Competitive local exchange carriers (CLECs) are treated as a single entity and included as an add-on to the Model.

- The other companies consist of non–rural ILECs or, more specifically, non-CRTCs, and contain the bulk of access revenues and volumes.

Billed Access Minutes

Interstate access minutes consist of "chargeable" local switching minutes from the TRPs.[2] For price cap companies, these are reported on the TGT-1 form, Row 420. For ROR companies, these are reported on the RORDMD-1 form, Row 430, Column D.[3]

Intrastate minutes, for those companies that provide ARMIS reports, are obtained from the ARMIS 43-08 report, Table 4.

For other price cap companies, intrastate minutes are estimated by multiplying their interstate minutes by the ratio of intrastate to interstate minutes calculated from data for 2002 in the FCC's *Statistics of Communications Common Carriers*, where interstate and intrastate interLATA billed access minutes are reported in Table 2.6.

- For Frontier and Citizens, the ratio of intrastate to interstate minutes is calculated from data for their Rochester Tel. subsidiary, which is assumed to be representative of other Frontier and Citizens entities.

- For Century Tel, the ratio of intrastate to interstate minutes is calculated from data for Century Tel of Washington.

For the ROR companies, intrastate minutes are estimated by multiplying their interstate minutes by 0.66, the ratio of intrastate to interstate minutes calculated from data provided by Sprint on its rural entities.

[2] The calculation of "chargeable" access minutes involves counting "non-premium" minutes as 0.45 of a standard or "premium" access minute.
[3] The rows and columns cited here are based on NECA's 2004 TRP filing and may not be the same for all ROR companies.

SLC Rates and Access Lines

The number of access lines consists of lines for which the SLC (Subscriber Line Charge) is assessed and consists of the sum of the lines reported in each month of the year, so that multiplying the number of lines by the monthly rate yields annual revenue.

- For price cap companies, SLC line count and rate data are taken from the RTE-1 form of their TRPs in Rows 102, 104, and 106. SLC rates consist of average rates for Ameritech and BellSouth, both of which have state-specific rates that are averaged across states. SLC rates were also averaged across filing entities for those companies that have multiple filing entities. For those companies that still collect "pooled" revenue from their MLB SLCs (Alltel, Frontier, Citizens, Valor, and Iowa Tel.), MLB SLCs consist of the rates net of any pooled revenue and were obtained from Row 420 of the CAP-2 form.

- For ROR companies, SLC line count and revenue data are taken from the RORREV-1 form of their TRPs in Rows 110, 120, and 130. The number of lines is multiplied by 12 in order to make the data on lines consistent with that for price cap companies.

Switched Access Revenue

Interstate: For price cap companies, interstate switched access revenues are obtained from the SUM-1 form of their TRPs, Column C, with local switching reported in Row 100, CCL (carrier common line) revenue in Row 110, PICC (presubscribed interexchange carrier charge) revenue in Row 112, common transport (also known as tandem-switched transport) revenue in Row 175, and dedicated transport revenue as the sum of Rows 180 and 200. The common and dedicated transport revenues do not include "non-ATS-related" revenues – revenues that are not included in calculating a company's ATS (average traffic sensitive) rate per minute.

Because a substantial portion of dedicated transport service has obtained Phase II pricing flexibility, it is no longer under price caps and its revenues are not reported in the TRP. With the exception of SBC and Sprint (from whom dedicated transport revenues were obtained directly), revenues associated with pricing flexibility were estimated by taking the dedicated transport revenues removed from price caps, as identified in various ILEC petitions to obtain pricing flexibility, and making the following adjustments to these amounts to account for growth:

- Revenues removed from price caps in 1999 (BellSouth and Pacific Bell) were increased by 29.11% to reflect growth from 1999 to 2003.

- Revenues removed from price caps in 2000 (Frontier) were increased by 17.37% to reflect growth from 2000 to 2003.

- Revenues removed from price caps in 2001 (Verizon and Qwest) were increased by 6.7% to reflect growth from 2001 to 2003.

These percentages reflect the cumulative effect of the assumed annual growth rates, which were 10% a year from 1999 to 2002 and -3% from 2002 to 2003.

For GTE, revenues associated with pricing flexibility were estimated on the basis of a comparison of transport revenues reported in ARMIS and those reported in the TRPs. The estimated pricing flexibility revenue was based on the difference between ARMIS revenues, which include all such revenues, and TRP revenues, which do not include pricing flexibility revenues.

For the ROR companies, interstate switched access revenues were obtained from the RORREV-1 form, Column G. Local switching includes the information surcharge (which is still assessed by ROR LECs but not by price cap LECs) and is the sum of Row 250 and Row 290. Common transport is the sum of Rows 340, 350, and 360; and dedicated transport is the sum of Rows 400 through 480. (As noted above, these row numbers refer to the NECA TRP and may differ somewhat among companies.)

Intrastate: For the RBOCs (except SBC), intrastate switched access revenues were obtained from the ARMIS 43-04 report, Table I, Row 4011, Column C. These revenues were allocated among the various access categories on the basis of non-public aggregate industry data obtained from Telcordia.

For other ILECs (except Sprint), intrastate switched access revenues were estimated from data provided by NTCA (National Telecommunications Cooperative Association) in an *ex parte* presentation.[4]

- For price cap companies, intrastate access minutes were multiplied by $0.048, the average intrastate rate per minute for NTCA companies with more than 50,000 lines.

- For ROR companies, intrastate access minutes were multiplied by $0.059, the weighted average intrastate rate per minute for all NTCA companies. The weights used in this calculation were based on data from NECA.

CLEC Data

Since CLECs are not included in the basic Model, the data for CLECs (competitive local exchange carriers) is much less extensive than the ILEC data and consists of:

- The number of CLEC lines consists of CLEC-owned lines and lines acquired as UNEs (unbundled network elements) from other carriers, as reported in Table 3 of

[4] "Intercarrier Compensation and Incumbent Rural Exchange Carriers" (pp. 9, 34, 36), NTCA *ex parte* presentation to the FCC, January 6, 2004.

the FCC's report, *Local Telephone Competition: Status as of December 31, 2003* (released June 2004).

- CLEC switched access revenue is estimated by multiplying ILEC switched access revenue by the ratio of CLEC lines to total ILEC lines, where total ILEC lines consist of end-user ILEC lines plus resold ILEC lines, as reported in Table 4 of the FCC's report, *Local Telephone Competition: Status as of December 31, 2003* (released June 2004).

The Model

For each ILEC, the Model calculates the "access shift," *i.e.*, the difference between current switched access revenue and residual access revenues, the access shift, the new SLC rates, new explicit universal service support, and individual access elements at each step of the ICF Plan. The logical process the Model follows is illustrated for a hypothetical individual company in the charts on pages 18-19 of this Appendix.

Access Shift

The overall reduction in switched access revenues is known as the "access shift." To determine the amount of access revenues to be shifted, several calculations are needed to estimate the amount of residual access revenue that will still be collected after compensation reform has been completed. All ILECs will still collect revenue for tandem transit service. Non-CRTCs will obtain revenue for interconnection transport[5], while CRTCs will obtain revenue for terminating transport by charging an average rate of up to $0.0095 per minute on all terminating access minutes. The Model assumes that each CRTC would select this $0.0095 per minute average rate.

Tandem transit revenue is estimated as follows:

- Calculate interstate and intrastate common transport (CT) revenue per minute.

- Select the minimum of interstate CT revenue per minute and intrastate CT revenue per minute.

- Calculate "common transport revenue at parity" -- what common transport revenue would be at the lesser of interstate or intrastate CT revenue per minute. For example, if interstate CT revenue per minute is less than the intrastate amount, intrastate CT revenue would be multiplied by the ratio of interstate to intrastate CT revenue per minute.

- Multiply the "common transport revenue at parity" by 20 percent for both interstate and intrastate to obtain tandem transit revenue.

[5] The current assumption is that CTRCs will not obtain any revenue for interconnection transport.

Interconnection transport revenue for non-CRTCs is calculated as follows:

- Calculate interstate and intrastate dedicated transport (DT) revenue per minute.

- Calculate "dedicated transport revenue at parity" by multiplying intrastate DT revenue by the ratio of interstate to intrastate CT revenue per minute.

- Multiply the "dedicated transport revenue at parity" by 50 percent for both interstate and intrastate to obtain interconnection transport revenue, which is priced at a 50 percent discount.

Terminating transport revenue for CRTCs is calculated by multiplying both interstate and intrastate minutes by the $0.0095 terminating rate and then by 60 percent, since it is assumed that 60 percent of the minutes are for terminating access.

The total amount of access revenue to be shifted is then calculated as: current switched access revenue minus tandem transit revenue minus interconnection transport revenue minus terminating transport revenue. 25 percent of this amount is shifted in Step 1 and another 25 percent in Step 2. The amount shifted in Step 3 is the greater of: a) 25 percent of the total access shift, as in Steps 1 and 2, or b) an amount equal to common transport revenue plus dedicated transport revenue minus the residual access revenues calculated above (i.e., tandem transit, interconnection transport, and terminating transport revenues). The amount shifted in Step 4 is equal to the total access shift minus the amounts already shifted in Steps 1, 2, and 3. The access shift is then expressed as a cumulative per line amount and a "uniform termination rate" (explained below) is added to it in Steps 6 and 7.

SLC Rates

SLC rates in each step are calculated on the basis of existing rates, "permitted revenue recovery per line", and certain caps on SLC rates and rate increases:

- First, existing SLC revenues are calculated on the basis of existing rates and the number of lines. Average SLC revenue per line, denoted in the Model as CMT revenue per line, is calculated for each company.

- "Permitted revenue recovery per line", which refers to the amount that can be recovered from SLCs and the new ICRM/TNRM support mechanism, is calculated as CMT revenue per line plus the cumulative access shift per line plus an additional amount that offsets the phase-out of the "uniform termination rate" in Steps 6 and 7.[6]

[6] This additional amount is equal to a company's access minutes per line times 0.6 times $0.0000875 in Step 6 and access minutes per line times 0.6 times $0.000175 in Step 7.

- New SLC rates are calculated as the lesser of "Permitted revenue recovery per line" or the maximum permitted SLC rate. The maximum SLC rates are determined by the following constraints:

  - For non-CRTCs, the caps on residential (including non-primary lines) and single-line business SLCs are $7.25, $8.00, $9.00, and $10.00 in Steps 1, 2, 3, and 4 respectively. The cap on multi-line business SLCs remains at $9.20 until Step 4 when it increases to $10. In addition, the cumulative increase in any SLC rate cannot exceed $0.75 in Step 1, $1.50 in Step 2, $2.50 in Step 3, and $3.50 in Step 4.

  - For CRTCs, the caps on residential (including non-primary lines) and single-line business SLCs are $7.00, $7.50, $8.00, $8.50, and $9.00 in Steps 1, 2, 3, 4 and 5 respectively. The cap on multi-line business SLCs remains at $9.20 until Step 4 when it increases to $10.

  The new SLC rates are thus equal to the lesser of a) permitted revenue recovery per line, or b) the SLC cap, or c) the existing SLC rate plus the limit on cumulative rate increases, denoted in the Model as the "average SLC rate increase limit."

  Calculation of ICRM/TNRM Support

  The ICRM and TNRM provide explicit universal service support for intercarrier compensation amounts otherwise not recoverable under the ICF Plan's rate restructuring rules. The Model calculates ICRM/TNRM support amounts as follows:

  - New SLC revenues are calculated by multiplying the new SLC rates by the number of lines.

  - Total revenue requirements are calculated by multiplying permitted revenue recovery per line by the number of lines.

  - ICRM/TNRM support is calculated by subtracting the new SLC revenues from the total revenue requirement.

SLC Increase and ICRM/TNRM Support for CLECs

ICRM/TNRM support for CLECs is estimated by multiplying total ILEC ICRM/TNRM support by the ratio of CLEC high cost support to total ILEC high cost support.[7] The total SLC increase for CLECs is estimated by subtracting ICRM/TNRM support from CLEC switched access revenue. (It is assumed that CLECs will not obtain any residual access revenues.)

[7] High cost support is reported in Table 3.2 of the FCC's *2004 Universal Service Monitoring Report, CC Docket 98-202,* (released October 2004).

Calculation of Individual Access Elements

Rate levels for individual access elements during the transition period depend on certain rules for making access reductions in each step:

- In Steps 1 and 2, non-transport rates (i.e., mainly local switching and in some cases, CCL, PICC, and other charges) are reduced by the amount of the "access shift" in each step. Since intrastate access rates are generally higher than interstate rates (Ameritech being the only exception), non-transport intrastate rates are reduced first, with each element reduced by the same percentage. Once non-transport intrastate rates are reduced to within 20% of interstate rates – i.e, intrastate revenue per minute is no greater than 1.2 times interstate revenue per minute - uniform percentage reductions are made to all non-transport rates.

- In Step 3, transport rates are reduced to 0, except for rates associated with tandem transit, interconnection transport, and the $0.0095 terminating transport rate for CRTCs.

- In Step 4, non-transport rates are reduced to 0.

The Results

By aggregating the Model's results for each of the large ILECs, plus the results the Model produces for CLECs and the small rate-of-return carriers, each in the aggregate, the Model produces a reliable picture of the transition the ICF Plan would produce to the new unified intercarrier compensation regime it proposes. The charts on pages 10-14 of this Appendix summarize the results produced by each transition step.

Based on the results of the Model, the ICF Plan would require non-CRTCs, in the aggregate, to seek recovery of over 80 percent of today's intercarrier compensation revenues from their end users. Such recovery is not assured, however, as market forces may prevent them from increasing end user charges to the full extent the ICF Plan would otherwise permit. The ICRM accounts for only 10 percent of the non-CRTC's former intercarrier compensation revenues, with the balance contained in remaining intercarrier charges. These results are summarized on page 20 of this Appendix.

As shown on page 21 of this Appendix, the results for CRTCs are much different, showing that the ICF Plan successfully addresses rural carriers' concerns surrounding intercarrier compensation reform, specifically their arguments that the diversity of their current revenue streams must be preserved and that any increases to their end user charges must be more measured than those applicable to larger carriers. As a result, the ICF Plan requires CRTCs to seek recovery of only about ¼ of today's intercarrier compensation revenue from their end users, while roughly another ¼ would continue to come from intercarrier charges. The remaining 50 percent is converted to TNRM support.

Preliminary Estimates of the ICF Plan Additional Universal Service Support

		Estimates @Step 1			
$ Millions	**Base Period Access Revenue**	**Remaining Intercarrier Payments ***	**Cumulative Access Shift**	**Enduser Revenue (Delta SLC)**	**TNRM / ICRM Support**
Non-CRTC	**$ 7,292**	**$ 5,617**	**$ 1,674**	**$ 1,287**	**$ 388**
CRTC	**$ 2,393**	**$ 1,928**	**$ 466**	**$ 117**	**$ 348**
TOTAL	**$ 9,685**	**$ 7,545**	**$ 2,140**	**$ 1,404**	**$ 736**
Increase in High Cost Fund From Changes in Existing High Cost Mechanisms					**$ 300**
Lifeline Increases From Higher Primary Residential SLC Rates					**$ 55**
Net Settlements -- Not Included In The Base					**$ 38**
Grand Total	**$ 9,685**	**$ 7,545**	**$ 2,140**	**$ 1,404**	**$ 1,128**

*Remaining Intercarrier Payments for CRTC are understated as EAS / Wireless terminating MOUs are not included in this model

Includes Interconnection Transport, Transit Service Revenue, Termination Rate Revenue, and for CRTC only Terminating Transport Charges.

Preliminary Estimates of the ICF Plan Additional Universal Service Support

		Estimates @Step 2			
$ Millions	**Base Period Access Revenue**	**Remaining Intercarrier Payments ***	**Cumulative Access Shift**	**Enduser Revenue (Delta SLC)**	**TNRM / ICRM Support**
Non-CRTC	**$ 7,292**	**$ 3,943**	**$ 3,349**	**$ 2,646**	**$ 702**
CRTC	**$ 2,393**	**$ 1,462**	**$ 932**	**$ 232**	**$ 700**
TOTAL	**$ 9,685**	**$ 5,404**	**$ 4,280**	**$ 2,878**	**$ 1,402**
Increase in High Cost Fund From Changes in Existing High Cost Mechanisms					**$ 300**
Lifeline Increases From Higher Primary Residential SLC Rates					**$ 109**
Net Settlements -- Not Included In The Base					**$ 75**
Grand Total	**$ 9,685**	**$ 5,404**	**$ 4,280**	**$ 2,878**	**$ 1,886**

*Remaining Intercarrier Payments for CRTC are understated as EAS / Wireless terminating MOUs are not included in this model

Includes Interconnection Transport, Transit Service Revenue, Termination Rate Revenue, and for CRTC only Terminating Transport Charges.

Preliminary Estimates of the ICF Plan Additional Universal Service Support

		Estimates @Step 3			
$ Millions	**Base Period Access Revenue**	**Remaining Intercarrier Payments ***	**Cumulative Access Shift**	**Enduser Revenue (Delta SLC)**	**TNRM / ICRM Support**
Non-CRTC	**$ 7,292**	**$ 1,860**	**$ 5,431**	**$ 4,337**	**$ 1,094**
CRTC	**$ 2,393**	**$ 837**	**$ 1,557**	**$ 343**	**$ 1,214**
TOTAL	**$ 9,685**	**$ 2,697**	**$ 6,988**	**$ 4,680**	**$ 2,308**
Increase in High Cost Fund From Changes in Existing High Cost Mechanisms					**$ 300**
Lifeline Increases From Higher Primary Residential SLC Rates					**$ 180**
Net Settlements -- Not Included In The Base					**$ 113**
Grand Total	**$ 9,685**	**$ 2,697**	**$ 6,988**	**$ 4,680**	**$ 2,900**

*Remaining Intercarrier Payments for CRTC are understated as EAS / Wireless terminating MOUs are not included in this model

Includes Interconnection Transport, Transit Service Revenue, Termination Rate Revenue, and for CRTC only Terminating Transport Charges.

Preliminary Estimates of the ICF Plan Additional Universal Service Support

		Estimates @Step 4			
$ Millions	**Base Period Access Revenue**	**Remaining Intercarrier Payments ***	**Cumulative Access Shift**	**Enduser Revenue (Delta SLC)**	**TNRM / ICRM Support**
Non-CRTC	**$ 7,292**	**$ 594**	**$ 6,698**	**$ 5,737**	**$ 961**
CRTC	**$ 2,393**	**$ 530**	**$ 1,863**	**$ 471**	**$ 1,393**
TOTAL	**$ 9,685**	**$ 1,124**	**$ 8,561**	**$ 6,207**	**$ 2,353**
Increase in High Cost Fund From Changes in Existing High Cost Mechanisms					**$ 300**
Lifeline Increases From Higher Primary Residential SLC Rates					**$ 235**
Net Settlements -- Not Included In The Base					**$ 150**
Grand Total	**$ 9,685**	**$ 1,124**	**$ 8,561**	**$ 6,207**	**$ 3,038**

*Remaining Intercarrier Payments for CRTC are understated as EAS / Wireless terminating MOUs are not included in this model

Includes Interconnection Transport, Transit Service Revenue, Termination Rate Revenue, and for CRTC only Terminating Transport Charges.

Preliminary Estimates of the ICF Plan Additional Universal Service Support

		Estimates @Step 5			
$ Millions	**Base Period Access Revenue**	**Remaining Intercarrier Payments ***	**Cumulative Access Shift**	**Enduser Revenue (Delta SLC)**	**TNRM / ICRM Support**
Non-CRTC	**$ 7,292**	**$ 594**	**$ 6,698**	**$ 5,953**	**$ 745**
CRTC	**$ 2,393**	**$ 530**	**$ 1,863**	**$ 563**	**$ 1,300**
TOTAL	**$ 9,685**	**$ 1,124**	**$ 8,561**	**$ 6,516**	**$ 2,045**
Increase in High Cost Fund From Changes in Existing High Cost Mechanisms					**$ 300**
Lifeline Increases From Higher Primary Residential SLC Rates					**$ 249**
Net Settlements -- Not Included In The Base					**$ 150**
Grand Total	**$ 9,685**	**$ 1,124**	**$ 8,561**	**$ 6,516**	**$ 2,744**

*Remaining Intercarrier Payments for CRTC are understated as EAS / Wireless terminating MOUs are not included in this model

Includes Interconnection Transport, Transit Service Revenue, Termination Rate Revenue, and for CRTC only Terminating Transport Charges.

Components Of Total ICRM/TNRM Funds Under ICF Plan -- All ILECs

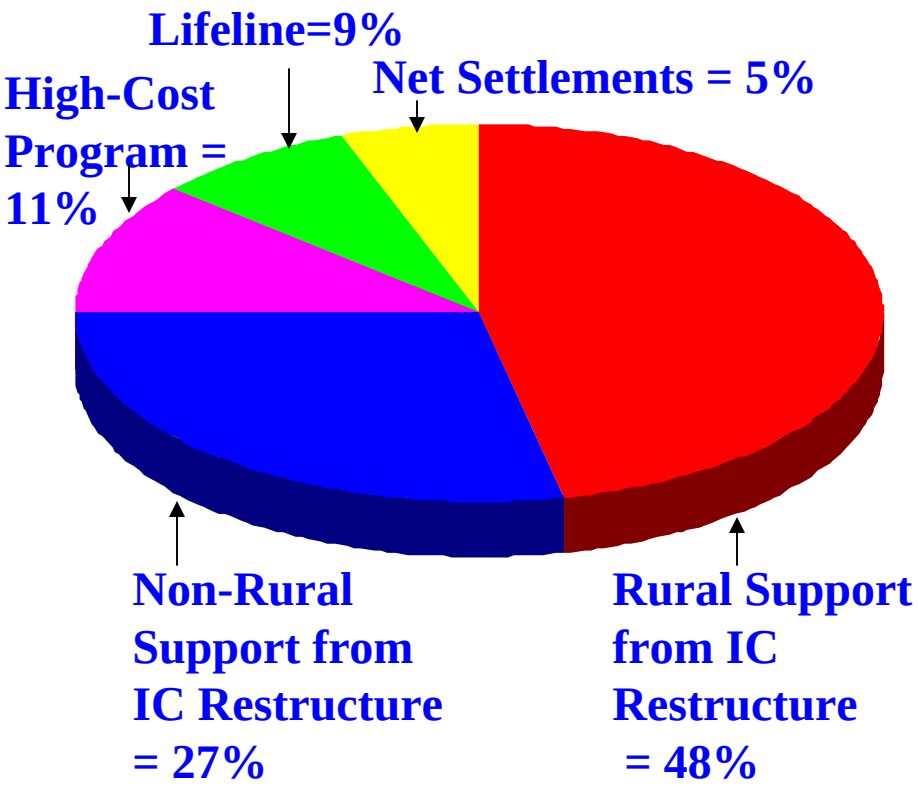

ICF Plan @ Step 5
($ Millions)

1. Rural Support From IC Restructure: $ 1,300
2. Non-Rural Support from IC Restructure: $ 745
3. Changes to High Cost Program Support: $ 300
4. Increase in Lifeline Program Support: $ 249
5. Net Settlements not in the Base: $ 150

Total Additional FUSF $ 2,744

Estimating Per Unit Universal Service Assessment Under The ICF Plan

		Impact @ Each Transition Step Under ICF Reform Proposal (Static Analysis)				
	Step 0	Step 1	Step 2	Step 3	Step 4	Step 5
Assessment Per Unit With ICF Changes	**1.00**	**1.17**	**1.25**	**1.37**	**1.35**	**1.31**
Dollars in Thousands	**Step 0**	**Step 1**	**Step 2**	**Step 3**	**Step 4**	**Step 5**
Assessment Per Unit Without ICF Changes	0.93	0.93	0.93	0.93	0.93	0.93
Baseline --USF	$ 6,885,802	$ 6,885,802	$ 6,885,802	$ 6,885,802	$ 6,885,802	$ 6,885,802
Overlay from the lifting of rural caps,etc.		$ 300,000	$ 300,000	$ 300,000	$ 300,000	$ 300,000
Overlay from Lifeline due to increase in SLC		$ 54,961	$ 109,126	$ 179,221	$ 234,979	$ 249,316
Settlement $ That were Not in the base		$ 37,500	$ 75,000	$ 112,500	$ 150,000	$ 150,000
Increase due to ICF (from the L&PP Model)		$ 735,837	$ 1,402,409	$ 2,307,771	$ 2,353,455	$ 2,044,842
Total USF With ICF Plan Changes	**$ 6,885,802**	**$ 8,014,100**	**$ 8,772,337**	**$ 9,785,294**	**$ 9,924,236**	**$ 9,629,960**

		Demand (Static Analysis)				
Category/Year: Working Numbers	**Step 0**	**Step 1**	**Step 2**	**Step 3**	**Step 4**	**Step 5**
ILEC	308,155,000	308,155,000	308,155,000	308,155,000	308,155,000	308,155,000
ILEC Lifeline Subscribers	6,637,817	6,637,817	6,637,817	6,637,817	6,637,817	6,637,817
CLEC	43,779,000	43,779,000	43,779,000	43,779,000	43,779,000	43,779,000
Assessable Wireless Numbers	141,204,217	141,204,217	154,849,599	161,672,290	182,140,362	182,140,362
Assessable Paging Numbers	5,741,200	5,741,200	5,741,200	5,741,200	5,741,200	5,741,200
Toll Free Numbers	22,127,206	22,127,206	22,127,206	22,127,206	22,127,206	22,127,206
Special access	20,814,774	20,814,774	20,814,774	20,814,774	20,814,774	20,814,774
Total Broadband	31,397,946	31,397,946	31,397,946	31,397,946	31,397,946	31,397,946
TOTAL UNITS AVAILABLE(w/o Lifeline)	**573,219,343**	**573,219,343**	**586,864,725**	**593,687,415**	**614,155,488**	**614,155,488**

Item#	Type of Data Needed	Source
1.0	**ILEC Current Subscriber Line Charge (i.e. SLC)**	
1.1	Primary Residential & Single-Line Business	ILEC Federal Tariffs
1.2	Non-Primary Residential	ILEC Federal Tariffs
1.3	Multi Line Business	ILEC Federal Tariffs
2.0	**ILEC Baseline SLC Demand By Type of Line**	
2.1	Primary Residential & Single-Line Business (including Lifeline Lines)	ILEC Annual Access Filings
2.2	Non-Primary Residential	ILEC Annual Access Filings
2.3	Multi Line Business	ILEC Annual Access Filings
2.4	Lifeline	ILEC Annual Access Filings
3.0	**ILEC Local Switching (or Access) MOU BY Jurisdictions**	
3.1	Interstate Local Switching MOU	ILEC Annual Access Filings
3.2	Intrastate Local Switching MOU	ARMIS/SOCC/ Others
4.0	**ILEC Interstate Baseline Access Revenue By Major Category**	
4.1	Carrier Common Line Revenue (CCL)	ILEC Annual Access Filings
4.2	PICC Revenue	ILEC Annual Access Filings
4.3	Local Switching Revenue	ILEC Annual Access Filings
4.4	Common (Tandem) Transport Revenue	ILEC Annual Access Filings
4.5	Dedicated Switched Transport Revenue	ILEC Annual Access Filings
5.0	**ILEC Intrastate Baseline Access Revenue By Major Category**	
5.1	Carrier Common Line Revenue (CCL)	ARMIS/SOCC/ Others
5.2	PICC Revenue	ARMIS/SOCC/ Others
5.3	Network Interconnection Revenue (NIC/RIC/TIC)	ARMIS/SOCC/ Others
5.4	Local Switching Revenue	ARMIS/SOCC/ Others
5.5	Common (Tandem) Transport Revenue	ARMIS/SOCC/ Others
5.6	Dedicated Switched Transport Revenue	ARMIS/SOCC/ Others
6.0	**Other Related Data, Factors, Assumptions, etc.**	
6.1	Percent of ILEC Common Transport That Would Be Charged Tandem Transit Rates (Model Default is 20%)	Studies and Reports
6.2	Expected Tandem Transit Rate-per-MOU (Model default is minimum of interstate & intrastate Switched Tandem Rate)	Studies and Reports
6.3	Interconnection Transport Revenue (Model default is 50% of Dedicated Switched Transport @ Interstate rate)	Studies and Reports
6.4	CRTC Terminating Transport Minutes (Model default is 60% of Local Switching MOU) That Would Be Priced @ $0.0095 rate/MOU	Studies and Reports

Model Input for ILEC XXX

Access Revenue Base		
A	Intrastate Access Revenue	$249,966,249
B	Interstate Access Revenue	$53,540,494
C = A+B	**Current Total Access Revenue**	**$303,506,743**
Access Lines (Annualized Demand)		
D	Primary Residential	33,192,850
E	Non-Primary Residential	5,226,029
F	Multi-Line Business	13,190,496
G = D+E+F	**Total Access Lines**	**51,609,375**
Current SLC Rates		
H	Primary Residential	$6.50
I	Non-Primary Residential	$7.00
J	Multi-Line Business	$7.68
K=(D*H+E*I+F*J)/G	Adjusted CMT Per Line	$6.85
L	Tandem Transit Service Revenue (**Residual of Common Transport**)	$2,329,898
M	Interconnection Transport Revenue (**Residual of Dedicated Switched Transport**)	$3,612,177
N	CRTC Terminating Transport Charge Revenue (**Replacing Dedicated Switched Transport for CRTCs Only**)	$0
O = L+M+N	**Residual Total Access Revenue**	**$5,942,075**
P = [C - O]	**Total Access Revenue Shift**	**$297,564,668**
Q = [P / G]/4	**Access Shift Per Line Per Step**	**$1.44**

STEP 0:	Price Cap Demand (M)	Demand Under Contracts (M)	Base Period Demand With Contracts (M)	June 30, 2005 SLC Rates	Adjusted CMT Per Line	Access Shift Per Step ($/Line)
Primary	33.193	0	33.193	$6.50		$1.44
Non-Primary	5.226	0	5.226	$7.00		$1.44
MLB	13.190	0	13.190	$7.68		$1.44
AGGREGATE	51.609	0	51.609	n/a	$6.85	$1.44

	Derivation of "As If" SLC Revenue/Line Per ICF Plan					Calculation of ICRM (*As If*)-- *In $ Millions*		
ICF: STEP 1	Cumulative Access Shift Per Step ($/Line)	Permitted Revenue Recovery/Line	Nationwide SLC Cap/Line	Average SLC Rate Increase Limit	"As If" SLC Revenue/Line	Potential SLC Revenue	Max. Line Recovery Revenue	ICRM
	A	B= A+ CMT/Line	C	D=SLC+Avg. Limit Per Step*	E=**	F = E*Demand with Contracts	G = B*Demand with Contracts	H = G - F
Primary	$1.44	$8.29	$7.25	$7.25	$7.25	$240.65	$275.29	
Non-Primary	$1.44	$8.29	$7.25	$7.75	$7.25	$37.89	$43.34	
MLB	$1.44	$8.29	$9.20	$8.43	$7.68	$101.30	$109.40	
AGGREGATE	$1.44	$8.29	n/a	n/a	n/a	$379.84	$428.03	$48.19
ICF: STEP 2	Cumulative Access Shift/Line	Permitted Revenue Recovery/Line	Nationwide SLC Cap/Line	Average SLC Rate Increase Limit	"As If" SLC Revenue/Line	Potential SLC Revenue	Max. Line Recovery Revenue	ICRM
Primary	$2.88	$9.74	$8.00	$8.00	$8.00	$265.54	$323.13	
Non-Primary	$2.88	$9.74	$8.00	$8.50	$8.00	$41.81	$50.88	
MLB	$2.88	$9.74	$9.20	$9.18	$8.00	$105.52	$128.41	
AGGREGATE	$2.88	$9.74				$412.88	$502.42	$89.55
ICF: STEP 3* **	Cumulative Access Shift/Line	Permitted Revenue Recovery/Line	Nationwide SLC Cap/Line	Average SLC Rate Increase Limit	"As If" SLC Revenue/Line	Potential SLC Revenue	Max. Line Recovery Revenue	ICRM
Primary	$4.32	$11.18	$9.00	$9.00	$9.00	$298.74	$370.98	
Non-Primary	$4.32	$11.18	$9.00	$9.50	$9.00	$47.03	$58.41	
MLB	$4.32	$11.18	$9.20	$10.18	$9.00	$118.71	$147.42	
AGGREGATE	$4.32	$11.18				$464.48	$576.81	$112.33
ICF: STEP 4	Cumulative Access Shift/Line	Permitted Revenue Recovery/Line	Nationwide SLC Cap/Line	Average SLC Rate Increase Limit	"As If" SLC Revenue/Line	Potential SLC Revenue	Max. Line Recovery Revenue	ICRM
Primary	$5.77	$12.62	$10.00	$10.00	$10.00	$331.93	$418.83	
Non-Primary	$5.77	$12.62	$10.00	$10.50	$10.00	$52.26	$65.94	
MLB	$5.77	$12.62	$10.00	$11.18	$10.00	$131.90	$166.44	
AGGREGATE	$5.77	$12.62				$516.09	$651.20	$135.11
ICF: STEP 5	Cumulative Access Shift/Line	Permitted Revenue Recovery/Line	Nationwide SLC Cap/Line****	Average SLC Rate Increase Limit	"As If" SLC Revenue/Line	Potential SLC Revenue	Max. Line Recovery Revenue	ICRM
Primary	$5.77	$12.62	$10.00	n/a	$10.00	$331.93	$418.83	
Non-Primary	$5.77	$12.62	$10.00	n/a	$10.00	$52.26	$65.94	
MLB	$5.77	$12.62	$10.00	n/a	$10.00	$131.90	$166.44	
AGGREGATE	$5.77	$12.62				$516.09	$651.20	$135.11

Source of Current Access Dollars Under The ICF Plan
-- Non-Rural ILECs

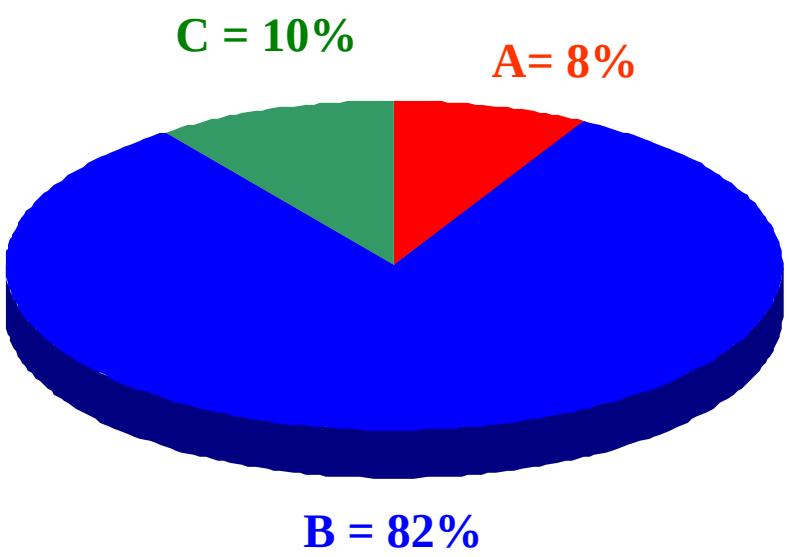

ICF Plan @ Step 5
($ Millions)

A. Intercarrier Payments Opportunity: $ 594

B. Enduser Revenue Opportunity: $5,953

C. Additional ICRM Funding Opportunity: $ 745

Total Current Access $ $7,292

Source of Current Access Dollars Under The ICF Plan – Rural ILECs

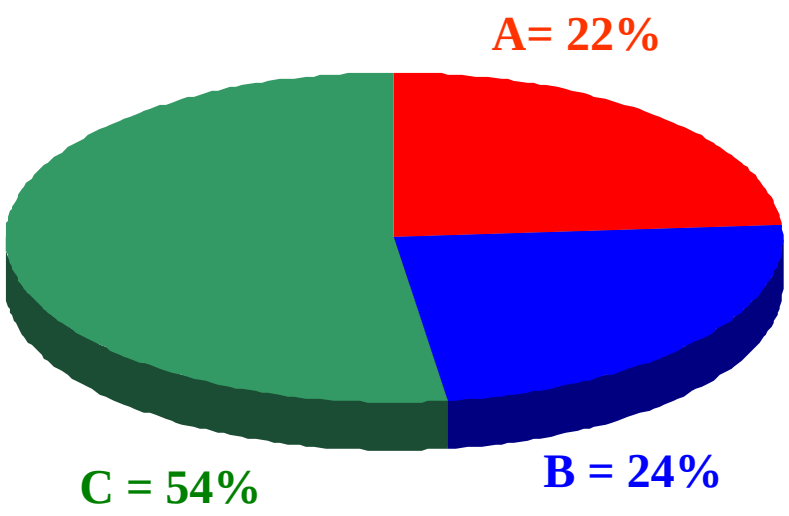

ICF Plan @ Step 5
($ Millions)

A.	Intercarrier Payments Opportunity:	$ 530
B.	Enduser Revenue Opportunity:	$ 563
C.	TNRM Support:	$1,300
	Total Current Access $	$2,393

Appendix C

APPENDIX C: Summary of the ICF Plan[1]

The Intercarrier Compensation Forum Plan ("the Plan") is a cross-industry proposal developed by a group of carriers with frequently divergent interests for reforming today's outmoded network interconnection, intercarrier compensation, and universal service rules. If adopted in its entirety, the Plan will advance consumer interests, facilitate efficient competition, promote the deployment of broadband and other new services and technologies, and preserve and enhance universal service. To accomplish these goals, the Plan establishes clear, uniform network interconnection rules and, on July 1, 2005, begins to restructure intercarrier compensation rates to bring immediate relief from today's broken system. Within three years, the Plan unifies the disparate network interconnection and intercarrier compensation regimes governing switched access, reciprocal compensation, and the exchange of ISP-bound, inter- and intra-MTA CMRS, and paging traffic, as well as traffic with one end originating or terminating on IP networks by replacing these regimes with a single, uniform, per-minute termination rate for all traffic. In the next phase, the Plan transitions that rate to an efficient and deregulatory bill-and-keep structure. Finally, the Plan reforms and reinforces universal service support by making explicit the support that today is implicit in intercarrier compensation charges and by creating an equitable and nondiscriminatory funding mechanism that is sustainable for the future.

The Plan is organized into three primary sections: (1) Network Interconnection; (2) Rate Restructuring; and (3) Universal Service, as follows:

I. Network Interconnection

The default network interconnection rules, which preserve physical interconnection flexibility but provide uniform and certain financial responsibilities for interconnection decisions, take effect in their entirety on July 1, 2007, at the beginning of the third annual step of the rate restructuring described below. This will allow carriers adequate time to plan for and coordinate the change, or, where in their mutual interest, to negotiate alternatives.

A. The Need for Uniform Default Network Interconnection Rules

Developing uniform default network interconnection rules is an essential part of a unified intercarrier compensation system. Otherwise, the financial burden on a carrier for delivering traffic to and receiving traffic from an interconnecting carrier would continue to vary based on how the traffic (and the carriers themselves) are classified, and what interconnection rules are therefore implicated. Such differences would undermine the benefits to be gained from uniform compensation rules. Further, by creating *default* rules, the Plan ensures regulatory certainty and efficiency with respect to the financial implications of interconnection for all carriers, regardless of whether they deem it appropriate to reach individualized, negotiated arrangements.

---

[1] The members of the ICF believe that the descriptions of the ICF Plan contained in this summary, the attached brief in support of the Plan, and the ICF's August 2004 *ex parte* filings in CC Docket No. 01-92 are all consistent with the detailed ICF Plan document, also attached to this brief as Appendix A. To the extent of any apparent conflict, however, the detailed ICF Plan document controls.

B. Types of Networks

Thus, the Plan establishes clear and explicit default technical and financial rules to govern the efficient interconnection of diverse carrier networks. These rules would take effect on July 1, 2007 and provide a framework for voluntary carrier negotiations, while establishing default responsibilities in the absence of any carrier agreement to the contrary. The Plan classifies networks into three categories – hierarchical, non-hierarchical, and rural – as follows:

- A *Hierarchical Network*, which is one that has commonly-owned access tandems and subtending end offices.
- A *Rural Network*, which is a network operated by a *Covered Rural Telephone Company* ("CRTC"), defined as a carrier that:
  - Is a Rural Telephone Company under the Communications Act, is not a BOC or an affiliate of a BOC, and serves fewer than 1,000,000 access lines in its study area; or
  - Is a Two Percent Carrier under the Communications Act with a holding company average of fewer than 19 switched access end user common line charge lines per square mile served; and
- A *Non-Hierarchical Network*, which is any network that is neither hierarchical nor rural.

C. Network Edges

The Plan's default rules for each type of network are based on the concept of network "Edges," which are specified points at which these networks accept traffic.[2] Edges are subject to locational, numerical, and functional requirements specified in the Plan.

Locationally, a carrier generally must specify at least one Edge within each LATA, at which it will permit interconnection and receive (or accept financial responsibility for) traffic. As a general matter, a CRTC also is entitled to receive traffic at Edges located within each contiguous portion of its study area.

---

[2] In some circumstances, carrier networks may seek to exercise their right under section 251(c) of the Act to physically interconnect their facilities (which include self-provided or leased facilities) at locations other than an Edge, but the Plan's default interconnection transport rules for apportionment of the cost of network interconnection would not apply; those rules apply only to transport between Edges. In such circumstances, carriers may purchase ILEC services, including expanded interconnection to special access to complete the path between the physical interconnection and the ILEC's Edge. Unbundled dedicated transport, where available, may also be used to complete this path. The list of technically feasible points of interconnection for purposes of section 251(c)(2) will be contingent on the ability of carriers to fulfill their interconnection transport obligations under the ICF Plan.

Numerically, a carrier may specify additional Edges within a LATA, subject to the following constraints. First, no carrier may require interconnection at more Edges in a LATA than the total number of ILEC access tandems in that LATA as of July 1, 2005. Second, no carrier may designate more than one Edge at a single geographic location. Third, no carrier may designate more Edges than otherwise meet the functional requirements prescribed by the Plan.

Functionally, an Edge must be able to accept all types of public switched telephone network traffic and, specifically, must be an access tandem, end office, wireless mobile switching center, point of presence, or trunking media gateway.[3] Other carriers must also be able to interconnect at the Edge using multiple methods. Specifically, the Edge owner must permit a requesting carrier to interconnect at an Edge using fiber optic or electrical cable termination (depending on volume), as well as the Edge owner's choice of two of the following: (1) physical or virtual collocation (a required choice for all ILECs other than CRTCs whose exemption under Section 251(f)(1) has not been terminated); (2) a mid-span fiber meet (a required choice for CRTCs); (3) leased transport provided by the Edge owner, subject to certain nondiscrimination requirements; and (4) leased transport provided by an unaffiliated carrier, subject to certain nondiscrimination requirements.

D. Interconnection of Networks

Under the default rules for network interconnection established under the Plan, a carrier is responsible for delivering traffic it receives at its Edge to its destination. Two networks interconnect their Edges using interconnection transport. The Plan establishes specific obligations and financial terms for interconnection transport, as follows:

> *Like Networks.* When two like networks interconnect (*i.e.*, Hierarchical-to-Hierarchical, Non-Hierarchical-to-Non-Hierarchical, or Rural-to-Rural), the originating network is financially responsible for delivering traffic it originates to the recipient carrier's Edge.
>
> *Hierarchical-to-Non-Hierarchical.* When a Hierarchical Network interconnects with a Non-Hierarchical Network, the Non-Hierarchical Network bears the financial responsibility for delivering traffic to (and transporting traffic from) the Hierarchical Network's Edge. The Hierarchical Network must, however, offer transport between the two network Edges at the interstate switched dedicated transport rate, with a 50 percent discount applicable to the first 40 miles of each route.[4] The Non-Hierarchical Network may accept this offer, or may elect to establish its own or third-party interconnection transport, in which case it would bear the entire cost of doing so.

---

[3] A Hierarchical Carrier (which operates both access tandems and subtending end offices) is not necessarily limited to using its access tandems as Edges. It may not, however, designate a local tandem or end office subtending its own access tandem as an Edge.

[4] The Plan also provides that interconnection transport trunks may not be used for transit traffic, discussed below, without compensation.

Rural Networks. The network interconnection rules in the Plan are explicitly designed to protect universal service in rural America by establishing modified default rules that apply to Rural Networks (*i.e.*, those operated by a CRTC). Generally, a CRTC is not required to deliver traffic to an interconnecting carrier at a point outside of the contiguous portion of the CRTC study area where the traffic originates, except to reach another CRTC within the same LATA.[5]

The default rules for interconnection of like networks apply (1) if an interconnecting carrier establishes an Edge within a contiguous portion of the CRTC's study area; or (2) when two CRTCs interconnect within the same LATA. To other carriers, a CRTC must offer interconnection at one or more meet points located on the boundary of each contiguous portion of its study area in addition to the physical interconnection obligations identified in the Plan. A carrier interconnecting with a CRTC must receive traffic originated by the CRTC at such a meet point, and assume financial responsibility for transport of traffic from that point. The interconnecting carrier must deliver traffic terminating to the CRTC's end users to the CRTC at the CRTC's designated Edge within the contiguous portion of the CRTC's study area where the traffic will terminate. To do so, it may purchase switched transport services from the CRTC, provision its own transport to the CRTC Edge, or purchase such transport from a third party. Thus, the Plan continues to provide a very important additional transport revenue stream for CRTCs that need such revenue diversity. In the alternative, a CRTC may elect to assume the costs of transport at the meet point, recovering the additional costs from its own end users or, if necessary, from a federal universal service support mechanism.

E. Tandem Transit Service

The Plan also addresses the obligations to provide and the rights to compensation for tandem transit service, which is distinct from interconnection transport. Tandem transit service is a switched transport function that is used to effectuate interconnection between two carriers within a LATA that are not directly interconnected. Such service will be classified under the Plan as an interstate common carrier offering.

Under the Plan, any ILEC that is providing tandem transit service on June 30, 2007 must continue to do so throughout the eight-year term of the Plan. Rates will be subject to the standards contained in Sections 201 and 202 of the Communications Act and subject to additional constraints. Specifically, the tandem transit rate for the first two years of the Plan (*i.e.*, from July 1, 2005 through June 30, 2007) may be no higher than the rate for such service on June 30, 2005, the day before the Plan takes effect. During the three-year period beginning July 1, 2007, the Plan establishes a revenue cap for tandem transit service based on the weighted average revenue per minute generated by interstate and intrastate jointly provided switched access, local transiting, and CMRS transiting traffic at June 30, 2005 rates evaluated at 2006 base period demand. Beginning July 1, 2010, this cap will increase by 3 percent per year. These revenue caps, once established, will also apply to competitive providers of tandem transit service.

---

[5] An exception exists for equal access traffic where an access tandem located outside such area is the source of equal access functionality, in which case the CRTC must designate such access tandem as its Edge for carriers that require equal access for interconnection.

II. Rate Restructuring

The Plan begins immediately, on July 1, 2005, to replace today's myriad of intercarrier compensation rate structures and levels with a fundamentally new uniform system applicable to all traffic. Increased federal end user charges (*i.e.*, federal subscriber line charges or "SLCs") and, where necessary, new explicit federal universal service support mechanisms will address the Plan's elimination of rate regulated carriers' intercarrier compensation revenues (as will revenue from interconnection transport and transiting charges, revenue from a transitional uniform termination charge, and terminating transport revenues for CRTCs, discussed above).

A. Intercarrier Compensation Transition

In four annual steps commencing July 1, 2005, the Plan transitions from today's array of rate structures and levels to a single, interim termination rate of $0.000175 per minute for all traffic. Beginning July 1, 2007, with no sunset, carriers also may receive unified intercarrier payments (*i.e.*, without regard to the historical classification of the traffic) for tandem transiting services, interconnection transport, and, for CRTCs, terminating transport revenues at prescribed rates for inbound traffic. The transition unfolds as follows:

Interstate and intrastate access charges. In four roughly equal annual steps beginning July 1, 2005, interstate and intrastate access charge revenues (except for interconnection transport, tandem transiting, and CRTC terminating transport) transition to a uniform $0.000175 per minute interim termination rate. Origination charges are transitioned fully to bill and keep. Facilities-based transport charges are targeted in the third step, unless reductions in these charges are necessary earlier to achieve the required reductions. If there is substantial disparity between rate levels in the two jurisdictions, the Plan calls for initial targeting of reductions to the jurisdiction with the higher rates. In CRTC-served areas, originating access is also targeted to the extent it is above the current price cap LEC average rate for interstate end office switching and provides additional options for CRTCs. During this transition, CLEC switched access rates are capped at the ILEC's level.

Facilities-based transport charges. Common and dedicated switched transport charges (including tandem switching, entrance facilities, and other rate elements directly associated with those elements) shift to the new rate structures described above on July 1, 2007, at the third step of the Plan, which is concurrent with the implementation of the new uniform network interconnection rules. Rate provisions for interconnection transport and tandem transit service are described above. At the start of the third step, network transport (*i.e.*, transport a carrier provides on its own side of its Edge) shifts to bill and keep.

CRTC Terminating Transport. Also effective July 1, 2007, CRTC transport charges shift to a new rate structure. Under the Plan, the weighted average of common and dedicated switched terminating transport rates across a CRTC holding company (including a single study area CRTC) may not exceed $0.0095 per terminating minute, or such lower rate that the CRTC elects. Within any single study area of a multi-study area

CRTC holding company, such weighted average rate may not exceed $0.013 per terminating minute.

Non-access intercarrier compensation other than CMRS-CRTC and ILEC-ILEC. In any state that has ordered carriers to exchange all non-access and ISP-bound traffic, including FX traffic (which is treated under the Plan as non-access), on a bill-and-keep basis, such traffic will continue to be exchanged on a bill-and-keep basis. In all other states, the Plan establishes a uniform default rate, effective July 1, 2005, of $0.0003525 per minute. This rate ramps down, in three additional equal steps, to $0.000175 per terminating minute, effective July 1, 2008. Finally, the Plan eliminates all new market restrictions and growth caps for ISP-bound traffic, subject to rate-based protections for growth in out-of-balance traffic exchanged between an ILEC and a CLEC.

Wireline-Wireless Traffic. The Plan provides that, in the wireless-to-wireline direction, traffic will be subject to reciprocal compensation if, at the beginning of the call, it originates and terminates within the same MTA. In the wireline-to-wireless direction, traffic will be subject to reciprocal compensation if, at the beginning of the call, it is destined for a wireless NXX that is rated in the ILEC's rate center or a rate center covered by EAS arrangements. For traffic exchanged between a CMRS provider and a CRTC, the Plan establishes a default initial reciprocal compensation rate equal to the lower of the rate contained in any agreement between the two parties or, in the absence of such an agreement, $0.0125 per minute, effective July 1, 2005. Once established, this rate transitions in three additional equal steps to the uniform, interim termination rate of $0.000175 per minute.

Intercarrier compensation for other non-access traffic will ramp down in four equal steps to the uniform termination rate of $0.000175 per terminating minute. Once the uniform, interim termination rate is established for all traffic on July 1, 2008, the Plan calls for a two-year hiatus to provide a period of stability for carriers and their customers alike, until June 30, 2010. At that time, carriers begin a final transition under which they will reduce this rate by half, to $0.0000875 per minute on July 1, 2010, and implement bill and keep on July 1, 2011.

CRTCs may seek a mid-course correction from the Commission if they can show that the implementation of the Plan is causing a decline in special access demand.

B. Alternative Revenue Recovery

Increased SLCs and, where necessary, new explicit federal universal service support mechanisms will address the elimination of intercarrier compensation cost recovery by rate regulated carriers. SLC rate cap increases are carefully measured and take place over a substantial transition period in order to avoid rate shock for consumers. In addition, universal service support protects low-income Lifeline customers from any SLC increases on their Lifeline service.

1. Non-CRTC End User Rate Transition

Subject to overall revenue constraints, non-CRTC ILECs may (but are not required to) increase SLCs over a four-step transition period, beginning July 1, 2005, subject to three rate limitations, as follows:

- Neither the nationwide $6.50 residential/single line business SLC cap nor the *average* residential SLC rate in a study area can increase by more than $0.75/month in steps 1 and 2, or by more than $1.00 in Steps 3 and 4.

- No individual SLC rate can increase by more than $0.95/month in Steps 1 and 2, or by more than $1.20/month in Steps 3 and 4.

- Other SLC caps (non-primary residential and multiline business) increase only to the extent they would otherwise be below the residential SLC cap.

As a result of this transition, the overall monthly SLC cap for all non-CRTCs will be uniform at $10.00 at the beginning of Step 4. Beginning July 1, 2009 (*i.e.*, the beginning of Step 5), any individual monthly SLC that is constrained below $10.00 as a result of the rate increase limits above may rise to that level (although no carrier is required to increase any SLC at any time). Also beginning July 1, 2009, the monthly nationwide SLC cap for non-CRTC price cap carriers will be indexed for inflation.

2. CRTC Rate Transition

For CRTCs, the SLC transition is even more measured. Between Step 1 and Step 5, monthly residential SLC caps increase from $6.50 to $9.00 in $0.50 annual increments. In Steps 1 through 3, other monthly SLC caps increase only to the extent that they would otherwise be below the residential SLC cap. In Step 4, the multiline business SLC cap increases to $10.00. After a hiatus, a CRTC has the option to increase its monthly residential SLC cap to $9.50, effective July 1, 2010, and to $10.00, effective July 1, 2011. CRTC SLC rates are also subject to the same limits on average SLC rate increases in a study area as non-CRTCs.

C. Price Cap ILEC Pricing Flexibility

The Plan provides certain pricing flexibility for price cap ILECs with respect to the application of the SLC, which is implemented in two steps. Throughout both steps, safeguards prevent a carrier's exercise of pricing flexibility from affecting the calculation of USF support.

Effective July 1, 2005, the Plan grants specific forms of SLC pricing flexibility, subject to significant consumer protection safeguards. These safeguards ensure that (1) the per-line SLC cap increase limits outlined above remain in effect and prevent additional SLC increases; (2) Section 201 and 202 standards apply to ensure that SLCs remain just, reasonable, and not unreasonably discriminatory; (3) overall limits on revenue recovery prevent a price cap ILEC from increasing recovery above what would be allowed in the absence of pricing flexibility; and (4) the new Mass Market Service Category and an Enterprise Service Category prevent recovery shifting from enterprise to mass market customers.

Subject to these protections, price cap ILECs may exercise the following SLC pricing flexibility, effective July 1, 2005:

- Geographic deaveraging by zone, with up to four zones, each containing at least 15 percent of lines;
- Volume, term, and growth commitment pricing;
- Flexible application of SLCs to Centrex, ISDN, and other derived channel services, by service category;
- Contract tariffing, not subject to price caps or revenue limits; and
- SLCs may be rolled into the price of service bundles, but must be tracked separately.

Effective July 1, 2008, price cap ILECs gain additional forms of SLC pricing flexibility, as follows:

- Overall SLC revenue limits no longer apply;
- The per-line SLC cap no longer applies to end user charges offered under contract tariffs (the per-line SLC cap otherwise remains in effect);
- Zone deaveraging, with no limitations on the establishment of pricing zones; and
- Tariff filings for price changes may be made on one day's notice.

III. Universal Service

The Plan creates two new universal service mechanisms to provide explicit support for intercarrier compensation amounts otherwise not recoverable under the Plan's rate restructuring rules. One is applicable to areas served by non-CRTC ILECs and one is applicable to areas served by CRTCs. The primary differences between the two are the extent of availability (during a transitional period) of this new support to competitive eligible telecommunications carriers (CETCs) and the disaggregation options available to recipients.

The first, the "Intercarrier Compensation Recovery Mechanism," or "ICRM," provides support to non-CRTC ILECs. It is available, on a per-eligible-line basis, to all CETCs competing with these carriers. By default, ICRM is available as a uniform, per-line amount to all eligible lines (*i.e.*, no disaggregation). ILECs have two alternatives to this default. A recipient ILEC may establish a Zone Disaggregation Plan. An ILEC may instead establish a Residential Targeting Plan, under which all ICRM support is targeted to residential lines based on a showing that the total revenue opportunity for serving a residential line is less than that for serving a business line.

The second, the "Transitional Network Recovery Mechanism," or "TNRM," is available to CRTCs. Its availability to CETCs competing with these carriers is limited to those (including new entrants) that lose access revenues as a result of the plan. Because CMRS carriers do not receive switched access charges, this transitional restriction is intended to allow only wireline CETCs to receive support from the TNRM, on a per-eligible line basis. The Plan calls for the Commission to review whether additional CETCs should receive support from the TNRM at the conclusion of the initial term of the Plan, in 2013. TNRM may be disaggregated in accordance with the Commission's existing rules governing disaggregation of support for rural carriers.

In addition, the Plan also makes several improvements to existing support mechanisms, including the rural high cost loop support mechanism (removing the cap, unfreezing the national average unseparated cost per working loop, and eliminating the rule reducing support for carriers serving over 200,000 lines) and the safety valve support mechanism (providing augmented support in the partial year and first full year after an acquisition closes, and creating "Safety Valve II," to provide analogous support for switching and transport investment). In addition, the Plan provides an option for certain price cap CRTCs to elect to receive support under the non-rural, high-cost mechanism. Finally, the Plan provides that the existing per-line universal service support amount will remain portable to CETCs.

To fund all existing and new mechanisms, the Plan creates a new uniform universal service contribution methodology based on "units" applied to unique working telephone numbers and high-capacity network connections. Under this methodology, each unique working telephone number is assessed one unit (with ½ unit assessed to numbers used for one-way, data-only CMRS paging service), and the Plan allows CMRS carriers, CRTCs, and CRTC competitors to phase this assessment in for additional numbers in a residential household account. Residential DSL, cable modem, and other high-speed, non-circuit-switched connections are also assessed one unit, harmonizing today's disparate treatment of DSL and cable modem services. For business connections, the Plan establishes a four-tiered system of assessments for non-switched, dedicated network connections ranging from one to 100 units depending on capacity.

Appendix D

INTERCARRIER COMPENSATION AND UNIVERSAL SERVICE REFORM PLAN

Developed by

THE INTERCARRIER COMPENSATION FORUM

October 5, 2004

TABLE OF CONTENTS

I. INTRODUCTION AND OVERVIEW 1

II. A UNIFORM MECHANISM FOR INTERCARRIER TRAFFIC EXCHANGES 2

A. DEFAULT RULES FOR INTERCARRIER TRAFFIC EXCHANGE AND COMPENSATION 3
- ***1.*** *Bill-and-Keep Within a Carrier's Network 3*
- ***2.*** *Edges 4*
  - **a.** Functional Network Locations 6
    - **(1)** Access Tandem 6
    - **(2)** End Office (for wireline carriers) 6
    - **(3)** MSC (for CMRS providers) 6
    - **(4)** Point of Presence (POP) 7
    - **(5)** Trunking Media Gateway 7
  - **b.** Physical Interconnection 7
- ***3.*** *Determination of the Responsibility for Interconnection Transport for Carriers Other than Covered Rural Telephone Companies 9*
  - **a.** Categorization of Networks 9
  - **b.** Interconnection Transport Between Non-Hierarchical Networks, and Between Two Hierarchical Networks 10
  - **c.** Interconnection between a Hierarchical Network and a Non-Hierarchical Network 10
    - **(1)** In General 10
    - **(2)** Facilities Beyond the Tandem 12
- ***4.*** *Interconnection between Signaling Networks. 13*
  - **a.** SS7 Interconnection Between Carriers and Providers that Own STPs ("SS7 Providers") and Carriers that Do Not Own STPs 13
  - **b.** SS7 interconnection between SS7 Providers 14
    - **(1)** Default D-link Quad Sets 14
    - **(2)** Default Signaling POIs 15
    - **(3)** Transition to the Default Arrangement 15
    - **(4)** Call Set-Up Message Transport 15
  - **c.** Database Message Transport and Queries 16
- ***5.*** *Tandem Transit Provider Use of Interconnection Transport to Deliver Terminating Tandem Transit Service Traffic 16*
- ***6.*** *Non-Hierarchical Carrier's Use of Interconnection Transport to Deliver Tandem Transit Service Traffic to Tandem Transit Provider 18*

B. MODIFIED DEFAULT RULES FOR INTERCONNECTION WITH COVERED RURAL TELEPHONE COMPANIES 19
- ***1.*** *Definition of Covered Rural Telephone Company ("CRTC") 19*
- ***2.*** *Modified Default Rules for CRTCs 19*
  - **a.** Interconnection between CRTCs and non-CRTCs 19
  - **b.** Interconnection between CRTCs within the Same LATA 21
- ***3.*** *CRTC Acquisitions of Exchanges 21*
  - **a.** Transactions between CRTCs 21
  - **b.** Transactions between a CRTC and a non-CRTC 21
    - **(1)** General Principles 21
    - **(2)** Implementation 22
      - **(a)** Rural Exchanges Defined 22
      - **(b)** Effects on Network Architecture When Exchanges Are Acquired from a Non-CRTC 22
      - **(c)** Revenue Recovery for Acquired Exchanges; Safety Valve II 23
      - **(d)** Effect on Seller 24

C. TANDEM TRANSIT SERVICE 25
- ***1.*** *Service to be provided 26*
- ***2.*** *Roles of each carrier in a Tandem Transit Service Arrangement 26*
  - **a.** Ordering Carrier 26
  - **b.** Tandem Transit Provider 27
  - **c.** Non-Ordering Carrier 28
- ***3.*** *Upper Limits on Rates for Tandem Transit Service 28*

a. July 1, 2007-June 30, 2010 28
b. July 1, 2010 – June 30, 2013 29
4. *Additional or Optional Features* *29*
5. *Traffic Volume Limitations and Premium Charges* *29*
6. *Reasonable Limits on Use of Tandem Transit Service* *30*
7. *Competitive Tandem Transit Providers* *31*

III. TRANSITION TO THE UNIFORM INTERCARRIER TRAFFIC EXCHANGE AND COMPENSATION PLAN 31

A. ACCESS CHARGE TRANSITION 31
1. *ILEC Access Charges* *31*
a. Initial Four Step Process 32
b. Targeting to Achieve Parity by All ILECs 33
c. Targeting of Originating Switched Access by CRTCs 34
d. Alternative for Rate-of-Return CRTCs. 35
e. Targeting by Certain Price Cap Carriers 35
2. *CLEC Access Charges* *36*
B. ILEC SWITCHED TRANSITING SERVICE 36
C. UNIFORM TERMINATION CHARGE AND CRTC TERMINATING TRANSPORT CHARGES 36
1. *Termination* *36*
2. *CRTC Terminating Transport* *37*
3. *Usage subject to the Uniform Termination Charge and CRTC Terminating Transport Charges* *37*
a. Uniform Termination Charge 37
b. CRTC Terminating Transport Charges 37
c. Responsible Carrier 39
D. TRANSITION OF INTERCONNECTION TRANSPORT 40
E. REDUCTIONS IN ALL OTHER INTERCARRIER COMPENSATION RATES FOR ALL INTERCONNECTING CARRIERS – RECIPROCAL COMPENSATION, WIRELESS AND PAGING INTERCARRIER COMPENSATION, INDEPENDENT COMPANY SETTLEMENTS, AND ISP-BOUND COMPENSATION 40
1. *In General* *40*
a. Overview 40
b. Effect on Interconnection Agreements 42
c. Growth Caps and New Market Restrictions 42
d. Payment of Tandem Rate; Treatment of FX Traffic 42
e. Rate Transition 42
f. Growth in Out-of-Balance Traffic 43
g. Prospective Effect 46
2. *Traffic Exchanged Between Wireless and Wireline Networks* *46*
3. *All Other Non-Access Traffic* *47*
F. ILEC REVENUE RECOVERY FOR REDUCTIONS IN SWITCHED ACCESS SERVICES TRANSITIONING TO BILL AND KEEP, ADJUSTMENT OF ACCESS TRANSIT RATES TO PARITY, ACCESS-BASED CHANGES IN ILEC INTERCONNECTION TRANSPORT, AND, FOR COVERED RURAL TELEPHONE COMPANIES, CHANGES IN NET INTERILEC SETTLEMENTS/RECIPROCAL COMPENSATION 48
1. *Price Cap LECs* *48*
a. Adjusted Access Revenue Shift Per Line 48
b. Average Permitted Revenue Recovery Per Line and Maximum Line Recovery Permitted Revenue 50
c. Calculation of ILEC Recovery from the New Support Mechanisms Established under this Plan. 51
(1) ILEC Study Area Support Amount 51
(2) Distribution of the ILEC Study Area Support Amount from the New Mechanisms Established Under this Plan 53
d. Calculation of Price Cap End User Charge Revenue Limit 53
2. *Rate-of-Return LECs* *54*
a. Revenue Recovery 54
b. End User Revenue Recovery 59

c. Adjustment for Impact on Special Access Revenues 59
G. SLC CAP TRANSITION AND INCREASE LIMITS FOR NON-CRTCS 60
1. Nationwide PR/SLB SLC Cap Transition 60
2. Nationwide Non-Primary Residential SLC Cap 61
3. Nationwide Multiline Business SLC Cap 61
4. Average End User Rate Increase Limit 61
5. Effective End User Rate Increase Limit (for a specific study area or zone) 62
H. SLC CAP TRANSITION FOR CRTCS 62
1. Nationwide PR/SLB SLC Cap Transition 62
2. Nationwide Non-Primary Residential SLC Cap 63
3. Nationwide Multiline Business SLC Cap 63
J. PRICE CAP LEC SLC PRICING RULES 63
1. General Pricing Rules for End User Charges – Effective July 1, 2005 63
2. General Pricing Rules for End User Charges – Effective July 1, 2008 68
3. Pricing Flexibility Procedural Changes 68
4. Additional Regulatory Relief 68

IV. NEW SUPPORT MECHANISMS 69

A. INTERCARRIER COMPENSATION RECOVERY MECHANISM ("ICRM") 69
1. General Rules 69
a. Eligibility 69
b. Distribution of Support 69
(1) Default Rule 69
(2) Zone Disaggregation Plans 69
(3) Residential Targeting Plans 71
(4) ICRM Support Available to CETCs 72
2. Calculation of Per-Line Amount 72
a. OPTION 1: ICRM Applied to All Lines 72
b. OPTION 2: Primary Line Restriction 73
B. TRANSITIONAL NETWORK RECOVERY MECHANISM ("TNRM") 73
1. General Rules 73
2. Calculation of Per-Line Amount 74
a. OPTION 1: TNRM Applied to All Lines 74
b. OPTION 2: Primary Line Restriction 74

V. UNIVERSAL SERVICE 75

A. CONTRIBUTION METHODOLOGY 75
1. Principles 75
2. Methodology 75
a. General 75
b. Unique Working Telephone Numbers 76
c. Network Access Connections 77
(1) Residential 77
(2) Business 77
(a) Tiered Contribution Obligations 77
(b) Treatment of Wi-Fi "Hot Spots" 78
(3) Services Provided to Resellers, UNE-P Providers, and VOIP Providers 78
d. Assessment and reporting procedure: 78
B. OTHER USF ISSUES 79

VI. OTHER ISSUES 82

A. TERM OF THE PLAN 82
B. FCC PROCEEDING 82

APPENDIX A – CARRIER RESPONSIBILITIES IN TANDEM TRANSIT SITUATIONS A-1

APPENDIX B – ICRM/ PRICING CHARTS B-1

INTERCARRIER COMPENSATION AND UNIVERSAL SERVICE REFORM PLAN

I. Introduction and Overview

This document sets forth an eight-year plan for intercarrier compensation reform developed by the Intercarrier Compensation Forum ("ICF"), a broad coalition with members representing a diverse cross section of telecommunications industry participants. It represents the ICF's effort to develop a single consensus proposal for reforming intercarrier compensation and universal service issues in a manner that will facilitate efficient competition, promote the deployment of new technologies, preserve and enhance universal service, and advance consumer interests. The Plan is designed to further the following specific public policy goals:

- Encourage timely deployment of new network technologies and capabilities by minimizing or eliminating regulatory-induced arbitrages;
- Preserve and enhance universal telephone service in all parts of the U.S.;
- Encourage all carriers to innovate and offer new services and packages;
- Reduce the cost of regulation by minimizing carrier disputes over interconnection and compensation arrangements; and
- Allow consumers and carriers to adjust expectations and business plans by implementing new intercarrier compensation and universal service structures over a reasonable transition period.

The plan seeks, at the end of its initial three-year transition, to unify the various mechanisms governing service provider traffic exchange and, where necessary, compensation, that today are applicable to all types of traffic carried on the PSTN, including local traffic, ISP-bound traffic, inter- and intra-MTA CMRS traffic, paging traffic, and traffic with one end originating or terminating on an IP network, and interstate and intrastate interexchange traffic.[1] Of necessity, this system would apply to all carriers, although the plan expressly recognizes some of the unique difficulties of serving rural and high cost areas.

Under this plan, all current forms of intercarrier compensation for switched services will be replaced by five categories: (1) a bill and keep regime in which most carriers

---

[1] The Plan currently resolves VOIP issues by creating an end state, at the end of the transition period, in which the compensation regimes applicable to circuit switched and IP traffic are harmonized. Fundamentally, therefore, the remaining open aspects of this issue arise during the transition. Thus, the Plan, in its present form, does not resolve the issue of what compensation, if any, should apply during the transition to a call with one circuit-switched end and one packet-switched end.

ultimately will recover origination, termination and transport within their networks and the cost of fulfilling their interconnection obligations from their end user customers and, if necessary, new federal support mechanisms; (2) tandem transit service which may be used to allow a carrier to interconnect indirectly with another carrier via a third-party carrier; (3) interconnection transport service that will provide a direct connection between two interconnecting carriers; (4) a transitory uniform termination charge applicable to the termination of all switched traffic; and (5) for certain, primarily rural carriers, a continuing revenue stream from transport services used to terminate switched traffic to end users served by their networks. This Plan for intercarrier compensation is not applicable to private line services or interstate or intrastate special access services or traffic exchanged directly between IP networks through public or private peering or IP transit arrangements. This new method of intercarrier compensation is mandatory for all carriers and will be implemented in a multi-step process, to begin July 1, 2005.[2]

The new federal support mechanisms this Plan creates ensure that, during and after the transition to bill-and-keep, end user rates remain affordable and reasonably comparable between urban areas and rural, insular, and high cost areas. The reduction in intercarrier compensation revenues will generally, under the mechanism described in this plan, be recovered from a combination of end user charges and support from these new federal mechanisms. Lifeline support will increase automatically to offset rate changes for low-income consumers receiving Lifeline service.

Finally, to ensure that this additional federal support can be raised without further destabilizing the existing universal service contribution mechanisms, this Plan proposes reform of the universal service contribution mechanism as described in Section V, below.

This Plan represents an integrated proposal by the ICF participants for holistic and comprehensive reform of intercarrier compensation and universal service issues that would compromise and settle areas of longstanding dispute for a substantial period of time. Because of the complexity and interdependence of the various facets of the Plan, the ICF participants view it as a unified proposal that the FCC should adopt without modification. The ICF would oppose any attempt to adopt individual parts of this Plan while modifying, rejecting, or deferring others.

II. A Uniform Mechanism for Intercarrier Traffic Exchanges

When all transitions under this plan are completed, the following default rules will exist to govern the interconnection between and compensation among carriers' exchanging traffic. These rules are default rules only, and carriers may agree to alternative arrangements as part of their interconnection negotiations. In general, as a default, traffic will be exchanged on a "bill-and-keep" basis at the default "Edge," as defined herein.

---

[2] All date references in this Plan assume that the rules implementing this Plan take effect on July 1, 2005.

The interconnection transport responsibility for delivering traffic directly between two interconnecting carriers' networks will be as detailed further below in Section II.A.3 and II.B.

Under this plan, carriers can fulfill their interconnection obligations by connecting either directly or indirectly. Carriers providing transit as of June 30, 2007 will be required to continue to do so through the life of the plan as outlined below in Section II.A.5.

This plan addresses the exchange of all types of traffic carried on the PSTN, including local traffic, ISP-bound traffic, inter and intra MTA CMRS traffic, paging traffic, traffic with one end originating or terminating on the IP networks and interstate and intrastate interexchange traffic ("PSTN Traffic").

Under the default rules established herein, each carrier will associate relevant call routing information with the appropriate Edge in each LATA. Relevant call routing information includes, for example, NPA-NXX, LRN, CIC, CAC, etc. The Commission shall promulgate rules establishing each carrier's Edges, as defined herein, as the default technically-feasible points within that carrier's network for interconnection for the transmission and routing of telephone exchange service and exchange access. As a consequence, the list of technically feasible points of interconnection for purposes of section 251(c)(2) will be contingent on the ability of carriers to fulfill their interconnection transport obligations under the ICF plan. A carrier with responsibility for interconnection transport must route traffic between its network and the appropriate Edge on the interconnecting carrier's network.[3] To effectuate this obligation, carriers will promptly open traffic routing codes in their switches.

A. Default Rules for Intercarrier Traffic Exchange and Compensation

1. Bill-and-Keep Within a Carrier's Network

Beginning with the start of Step 3, intra-network transport will be provided on a bill-and-keep basis, except when provided by CRTCs as described further below. Beginning with the start of Step 4, there will be a uniform rate for the termination of all traffic, the Uniform Termination Charge, as described in Section III.C.3.a. Beginning at the start of Step 7, termination of traffic will be on a bill-and-keep basis. This does not imply that carriers will not compensate each other for the provision of interconnection transport and Tandem Transit Service, which are described further below.

---

[3] This recognizes that a carrier may specify that certain types of traffic, such as, for example, 911 or operator services, must be routed to particular Edges via segregated trunk groups as needed for that purpose.

2. Edges

Each carrier will establish an "Edge" or "Edges" as the point or points at which the carrier will receive traffic for routing within its network. Other carriers must be allowed to physically interconnect at those Edges.[4] Edges are subject to numerical limitations and definitional limitations. Each carrier must establish at least one Edge in each LATA in which it has a need to receive traffic from other carriers. Any Edge must be a functional network location under Section II.A.2.a., below, meet the physical interconnection requirement under Section II.A.2.b., below, and must accept all kinds of PSTN Traffic. A carrier may designate another carrier's facilities as its Edge, with the agreement of the owner of that facility. For areas within or associated with LATAs, these limitations are as follows. First, no carrier may designate more Edges in a LATA than the total number of ILEC Access Tandems in that LATA as of July 1, 2005.[5] No carrier may establish more than one Edge in a single geographic location (*e.g.*, a building). Second, no carrier may designate more Edges in a LATA than the total number of network-defined Edges that the carrier has in the LATA. In effect, these rules limit a carrier's Edges to the lower of the number of Access Tandems or the number of the carrier's network-defined Edges in the LATA. Collectively, these restrictions both

---

[4] Section 251(c)(2) establishes a discrete ILEC obligation to provide, for the facilities and equipment of any requesting telecommunications carrier, interconnection with the local exchange carrier's network for the transmission and routing of telephone exchange and exchange access at any technically feasible point within the carrier's network. Section 251(c)(2) requires ILECs to allow other telecommunications carriers to designate where they want their facilities (which include self-provided or leased facilities) to be physically linked to the ILEC network, *i.e.*, the technically feasible point in the ILEC network where the two networks physically touch. Conversely, the ICF Plan establishes the network bearing the financial obligation for the transport required to connect the two networks and designates the network location to which traffic must be delivered. If a carrier elects to physically interconnect its facilities with an ILEC's network at a location other than the ILEC's Edge by asserting its rights under section 251(c)(2), the ICF Plan's default rules apply regardless. Moreover, when a carrier (other than an ILEC) operating a Non-Hierarchical Network elects to invoke section 251(c)(2) to interconnect its facilities with an ILEC operating a Hierarchical Network at a location other than the ILEC's designated Edge, the ILEC is not required to offer the other carrier its discounted interstate dedicated switched transport to reach the ILEC's Edge. Carriers may purchase ILEC services including expanded interconnection to special access to complete the path between the point at which they have interconnected with the ILEC's network and the ILEC's Edge. Unbundled dedicated transport, where available, may also be used to complete this path.

[5] If there is more than one ILEC in a LATA, all the ILEC Access Tandems in the LATA will be summed to establish this limit.

prevent a carrier from proliferating Edges in order to shift transport responsibility from itself to other carriers, and ensure that an interconnecting carrier can choose direct interconnection.

With respect to states without LATAs,[6] each carrier must establish at least one Edge in each local calling area in which it exchanges traffic with other carriers. Edges will be limited to the number of ILEC Local Exchange Routing Guide (LERG) listed end-offices for each calling area, irrespective of any other provision herein.

Default Edge locations will be designated and fixed as of January 1, 2006. Prior to that date, carriers will adhere to pre-existing rules and standards for network changes. After that date, carriers will adhere to the Edge change rules as specified below. A carrier entering a LATA to provide service will designate and fix its Edges at the time when the need first arises to receive traffic within a LATA (or, for a non-LATA state, local calling area). A carrier shall publish a list of its Edges and associated routing information in a public manner, such as on a website.[7]

There would be a mandatory notice period of 12 months for any carrier to move an Edge after the date on which Edge locations are designated if such change will necessitate changes in physical interconnection arrangements for directly interconnecting carriers. The notice requirement will be 6 months for establishing an Edge in a LATA for the first time, or for establishing a new Edge that does not involve redirection of traffic. For changes to Edge locations that result only in logical re-routing of traffic (*i.e.*, revision to a routing table or the establishment or augmentation of a trunk group), the carrier shall provide 3 months' advance notice. Carriers moving an Edge would be required to provide notice to all directly interconnecting carriers, to all known interconnecting Tandem Transit Providers, and to post relevant information as part of the publication requirement. After July 1, 2007, a carrier moving its Edge during the notice period would bear the responsibility for transporting traffic from the old Edge to the new Edge. After completion of the notice period, the normal default rules apply. A carrier would be free to change an Edge at any time with the consent of carriers interconnecting directly at that Edge.

Carriers that operate Hierarchical Networks (as defined in II.A.3.a.) will not necessarily be limited to Access Tandems for their Edges. If, under the numerical and definitional limits, a Hierarchical Carrier is entitled to additional Edges, that carrier may maintain such Edges (such as a qualifying Trunking Media Gateway, as defined in II.A.2.a.(5),

---

[6] These are only states without LATAs, and do not include single LATA states. Alaska is the only state without a LATA. Unless otherwise specified herein, in a state without LATAs, the term "LATA" throughout this Plan shall be deemed to refer to a local calling area."

[7] Interconnecting carriers must honor routing designations.

below). However, a Hierarchical Carrier may not declare a local tandem or End Office subtending its own Access Tandem to be an Edge. Such carriers would also be able, consistent with the Edge change rules, to substitute a new Edge such as a Trunking Media Gateway for an existing Access Tandem.

a. Functional Network Locations

The following are "Functional Network Locations":

(1) Access Tandem

An "Access Tandem" is a building location with a carrier switch that establishes trunk-to-trunk connections between designated End Office switches and long distance service providers for the routing of interstate and intrastate interexchange traffic. Access Tandems have point codes and are listed in the LERG or any successor or alternate guide with a unique CLLI Code and the designated End Office switches they serve for routing purposes. Only the use of legitimate Access Tandems will qualify a carrier's network as "Hierarchical." To be declared an Edge after January 1, 2006, an Access Tandem must be subtended by at least three End Offices

(2) End Office (for wireline carriers)

An "End Office" (for wireline carriers) is a building location with a carrier switch to which multiple unaffiliated telephone service subscribers access lines are connected. End Offices provide dial tone to the subscriber, perform call origination and call termination functions and establish line-to-line, line-to-trunk, and trunk-to-line connections for the transmission and routing of local and toll traffic. End Offices represent the last switch at which the interconnecting carrier can establish trunking for the purpose of exchanging traffic. (Remotes that are not capable of establishing trunking with other carriers for the exchange of traffic therefore cannot be Edges.) End Offices are listed in the LERG or any successor or alternate guide with the NPA-NXX Codes, and a Location Routing Number (LRN) assigned to them. End Offices that use SS-7 signaling must have an associated point code.

(3) MSC (for CMRS providers)

An "MSC" (for CMRS providers) is a building location with a carrier switch to which multiple unaffiliated CMRS (including paging) subscribers are provided network connectivity via mobile base stations. The MSC is the last switch at which another carrier can establish trunking for the purpose of exchanging traffic with CMRS subscribers. MSCs, other than those used solely to provide one-way paging services, are listed in the LERG or any successor or alternate guide with the NPA-NXX Codes, and a LRN assigned to them.

(4) Point of Presence (POP)

A carrier location will be deemed to be a POP if it meets either of the two following definitions:

(a) Building space owned or controlled by the carrier, its agent or designee where the carrier has located transmission facilities used to virtually extend switching capacity or Trunking Media Gateway functionality from one LATA to another LATA and is listed in the LERG or any successor or alternate guide with the NPA-NXX Codes, and a LRN. A carrier may associate only one POP per LATA for each remotely-deployed switch but, if this limitation would result in that carrier having only one Edge in a LATA, the carrier may associate two POPs in that LATA with its remotely-deployed switch; or

(b) Building space owned or controlled by the carrier, its agent or designee where the carrier has located transmission facilities and to which the ILEC is providing switched access services as of the date of adoption of the Commission order establishing comprehensive rules to implement this Plan.

(5) Trunking Media Gateway

A "Trunking Media Gateway" is a building location with a device or system that converts TDM messages to packet messages and packet messages to TDM messages through protocol conversion. A Trunking Media Gateway allows communications between a TDM network and an IP network. For purposes of the ICF proposal a Trunking Media Gateway must meet the following criteria:

(a) It provides access to multiple unaffiliated telephone service subscribers; and

(b) Unaffiliated carriers may establish TDM trunks between it and their switches; and

(c) It is listed in the LERG or any successor or alternate guide with the NPA-NXX Codes, and a LRN or is serving as an IXC ingress/egress point.

b. Physical Interconnection

Any Edge owner, itself or through its agent or designee, must permit a requesting carrier to interconnect at its Edge, solely for the purpose of direct or indirect interconnection, through the requesting carrier's choice of:

(1) Fiber Optic Cable Termination (*i.e.*, the termination of fiber optic strands to a digital cross-connect system (DCS) or comparable device establishing optical continuity with the other carrier), provided that the requesting carrier also offers the Edge owner interconnection via fiber optic cable termination and further provided that the two carriers collectively exchange volumes of traffic that require at least 673 voice grade trunks, *i.e.*, one more than a DS-3.[8] This option may not be used where the requesting carrier's forecasted needs can be handled through existing spare capacity controlled by the requesting carrier; and

(2) Electrical Cable Termination , provided that the requesting carrier also offers the Edge owner interconnection via electrical cable termination and further provided that the two carriers collectively exchange volumes of traffic that do not require more than 672 voice grade trunks[9]; and

(3) The Edge owner's choice of at least two of the four methods of physical network interconnection specified below:

(a) Physical collocation or virtual collocation – the terms, conditions and prices shall be no less favorable than collocation offered by the ILEC in that serving area;

(b) Mid-span fiber meet – If the Edge owner offers mid-span fiber meet, the Edge owner cannot assess any charges for its facilities between its Edge and the meet point, and if the owner chooses a meet point that is further from the Edge owner than the requesting carrier, it must compensate the requesting carrier based on the additional mileage;

(c) Leased transport provided by the Edge owner - the terms, conditions and prices shall be no less favorable to the requesting carrier than the interstate switched dedicated transport offered by the ILEC in that serving area, and in no case higher than any rate that the incumbent may be required to charge for this functionality;

---

[8] An interconnecting carrier is not required to obtain collocation to implement Fiber Optic Cable Termination.

[9] An interconnecting carrier is not required to obtain collocation to implement Electrical Cable Termination.

(d) Leased transport provided by an unaffiliated carrier - the terms, conditions and prices shall be no less favorable to the requesting carrier than the interstate switched dedicated transport offered by the ILEC in that serving area, and in no case higher than any rate that the incumbent may be required to charge for this functionality.

An ILEC other than a Covered Rural Telephone Company whose exemption under Section 251(f)(1) has not been terminated with respect to collocation obligations must always make available interconnection through physical and virtual collocation. A Covered Rural Telephone Company must always make available a mid-span fiber meet.

Carriers having any interconnection trunk groups that are chronically or persistently underutilized (as measured by the following standard) may be required to reduce the trunks in such group to achieve more optimal utilization. If a certain trunk group is at 65 percent or less capacity during the time-consistent busy hour for three consecutive months, then an interconnecting carrier may request to and the other carrier will reduce the trunk group to the point that it is at 75 percent capacity in the busy hour. If a carrier can document that increases in traffic volume will increase trunk group utilization in the busy hour to 75 percent within nine months, it shall not be required to reduce the trunk group.[10]

All carriers are responsible for transmitting the calling party number, except in cases where such number is not required to be transmitted under 47 C.F.R. § 64.1601(d). In addition, when a call is originated using a PRI ISDN line, the transmitting party shall provide the number of the calling party, if available, and not the number assigned to the PRI ISDN line used for interconnection, except where doing so would cause problems for 911/E911 systems.

3. Determination of the Responsibility for Interconnection Transport for Carriers Other than Covered Rural Telephone Companies

a. Categorization of Networks

A Hierarchical Network is one (other than a Rural Network, as defined below) in which End Offices subtend an Access Tandem owned by the owner of such End Offices. As

[10] All interconnecting carriers have a vested interest in maintaining the efficiency and reliability of trunking. The ICF will explore ways to assure meaningful participation in the management and engineering of trunk groups by a party that does not have control of such trunk groups but has traffic for which it bears financial responsibility on such trunk groups.

used in this Plan, the term "Hierarchical Carrier" shall mean a carrier to the extent it is engaged in the operation of a Hierarchical Network.

A Rural Network is one operated by a Covered Rural Telephone Company ("CRTC"), as defined in Section II.B.1., below.

A Non-Hierarchical Network is one that is neither a Hierarchical Network nor a Rural Network. As used in this Plan, the term "Non-Hierarchical Carrier" shall mean a carrier to the extent it is engaged in the operation of a Non-Hierarchical Network.

Non-facilities-based carriers will stand in the shoes of their underlying network providers with respect to Edge responsibilities and network categorization.[11] UNE-platform carriers will be responsible for compensating the underlying network provider for a pro-rata share of network interconnection transport costs incurred by that provider. UNE-platform carriers will also be responsible for their share of any charges incurred by the underlying network provider for Tandem Transit Service, as defined in Section II.C., below.

b. Interconnection Transport Between Non-Hierarchical Networks, and Between Two Hierarchical Networks

For interconnection between two Non-Hierarchical Networks, or between two Hierarchical Networks, each carrier has the responsibility to transport traffic to the Edge designated by the destination network to reach the terminating end user. A carrier may fulfill this responsibility directly or indirectly according to the terms of this Plan. Neither carrier shall charge the other for multiplexing or de-multiplexing of interconnection transport trunks used for the exchange of traffic between the two carriers.

c. Interconnection between a Hierarchical Network and a Non-Hierarchical Network

(1) In General

For direct, physical interconnection of a Non-Hierarchical Network with a Hierarchical Network, the carriers will establish interconnection transport (*i.e.*, facilities and associated trunking between two networks used for the exchange of traffic between two carriers) between the Edge of the Hierarchical Network serving the Hierarchical Network's end user and the appropriate Edge(s) of the interconnecting network. The Non-Hierarchical Carrier is responsible for establishing interconnection transport to carry traffic in both directions between the two networks. To fulfill that responsibility, the

---

[11] These Edges will not count toward the maximum allowed to the non-facilities-based carrier to the extent that it also operates using its own facilities in that LATA (and thus maintains its own Edges).

Non-Hierarchical Network will choose to self-provide or to use transport provided by the Hierarchical Network or some third party.

The Hierarchical Network will offer to provide interconnection transport between its Edges and the other carrier's Edges at a rate that is 50 percent of the appropriate ILEC interstate switched dedicated transport rate[12] for non-mileage-based charges (including entrance facilities), and 50 percent of that area's ILEC's interstate switched dedicated transport access rate (fixed as of June 30, 2005) for mileage-based charges for the first 40 miles for a route (limited to within the Hierarchical Network carrier's serving area), and 100 percent for additional mileage.[13] Carriers will be eligible for 50 percent off whatever term, volume, or other optional pricing plan applies. Moreover, interconnection agreement terms and conditions cannot modify terms and conditions of interstate switched dedicated transport tariffs and commitments hereunder for interconnection transport. The Non-Hierarchical Carrier will also have the option of self-providing or leasing the interconnection transport from a party other than the Hierarchical Network (in which case the Hierarchical Network is not required to share the financial responsibility).

Neither carrier shall charge the other for multiplexing or de-multiplexing of interconnection transport trunks established by the Non-Hierarchical Carrier and used for the exchange of traffic between the two carriers. If the trunk is used for other purposes, such as for interconnecting with UNEs provided by the Hierarchical Carrier or providing special access services, the Hierarchical Carrier shall be entitled to charge the Non-Hierarchical Carrier a pro-rata share of the multiplexing or de-multiplexing charge, as

---

[12] Where a carrier has ordered special access circuits that are used for switched network interconnection between its Edge and an Access Tandem or End Office switch of the Hierarchical Carrier on or before June 30, 2007, such carrier shall be entitled to have such circuits re-rated, effective July 1, 2007, under the terms of this Plan without requiring physical rearrangement, including, if applicable, the 50 percent discount. Thereafter, to receive the 50 percent discount, a carrier must order interconnection transport circuits. Notwithstanding the limitation above, for interconnection transport provided using network configurations that are not available under the switched dedicated transport tariff, as of June 30, 2005, the special access rates for such configurations will be used in determining the appropriate rate. References throughout this document to the switched dedicated transport rate for Tandem Transit Service and interconnection transport include applicable special access rates under that circumstance.

[13] The switched dedicated access rates in effect on June 30, 2005 shall be used, provided that the ILEC has made no changes to those rates in the 90-day period leading up to June 30, 2005. If changes to any such rate have been made during that period, then the simple average of the rate in effect on each day during such 90-day period shall be used instead.

appropriate, based on the portion of the trunk capacity used for purposes other than for interconnection transport.

To the extent that traffic associated with a particular subtending End Office and a Non-Hierarchical Carrier's Edge exceeds a busy-hour threshold of 1215 CCS (hundred call seconds) total two-way traffic between two switch points measured in time-consistent busy hour each month for three consecutive months (based on Neal-Wilkinson tables, 1 percent blockage, low day-to-day variation with a peakedness factor of 1.0), then carriers will segregate that traffic onto a dedicated trunk group.[14]

(2) Facilities Beyond the Tandem

Either carrier may discontinue use of facilities provided by the other carrier for direct interconnection between a Non-Hierarchical Carrier's Edge and an End Office (or local tandem or other network location beyond the Access Tandem) of the Hierarchical Carrier.

Carriers are free mutually to agree to compensation arrangements for use of such facilities. If the facilities remain in place, but no other compensation agreement is reached, then the following default provisions shall apply:

If a Non-Hierarchical Carrier has leased dedicated switched transport from the Hierarchical Carrier prior to the start of Step 3 of the Plan and these facilities are used to provide direct interconnection between the Non-Hierarchical Carrier's Edge and an End Office (or local tandem or other network location beyond the Access Tandem) of the Hierarchical Carrier, the Non-Hierarchical Carrier will reimburse the Hierarchical Carrier for the continued use of these facilities starting at Step 3 of the Plan. Compensation will be based on the appropriate interconnection transport rate measured from the Non-Hierarchical Carrier's Edge to the Hierarchical Carrier's Edge serving that End Office (or local tandem or other network location beyond the Access Tandem).[15]

As of July 1, 2006, Non-Hierarchical Carriers using a facility functionally equivalent to an ILEC's switched dedicated transport not provided by the Hierarchical Carrier shall provide the Hierarchical Carrier with notice of that use so that the Hierarchical Carrier may provision its own network transport if it elects to do so. If a Non-Hierarchical Carrier has constructed or acquired (including on a lease or IRU basis) its own transmission facilities for the exchange of traffic prior to the start of Step 3 of the Plan and the Hierarchical Carrier uses those facilities in lieu of its own network transport

---

[14] This standard shall also apply to a CRTC that designates an Access Tandem as an Edge.

[15] This would include the portion of any dedicated facilities used for interconnection transport that are shared between switched and special access use.

between its Edge and its End Office (or local tandem or other network location beyond the Access Tandem), the Non-Hierarchical Carrier shall be entitled to compensation from the Hierarchical Carrier starting at Step 3 of the Plan to the extent the Hierarchical Carrier uses such facility to meet its Edge responsibilities with respect to its end users. Compensation will be based on the Hierarchical Carrier's tariffed rate for switched dedicated transport, not including entrance facilities, measured between the Access Tandem and the End Office (or local tandem or other network location beyond the Access Tandem) and the actual circuit capacity usage of the facility required for the Hierarchical Carrier to meet its Edge responsibilities with respect to its end users (*i.e.*, reflecting circuits needed to accommodate switched voice traffic to/from end users subtending the End Office).

If either carrier decides not to continue use of such facilities, network rearrangements necessitated as a result of this decision shall be scheduled and performed according to the carriers' normal business practices. (Normal business practices means that carries may not unilaterally accord special priority to these rearrangements, as compared to other rearrangements).

4. Interconnection between Signaling Networks.

Where carriers directly interconnect to each other, to effectuate interconnection under this plan, they must also separately implement interconnection of their SS7 networks.[16] This is because SS7 signaling is carried over separate facilities. Signaling Transfer Points,[17] or STPs, are packet switch devices used to switch and route SS7 signaling traffic between signaling points (*i.e.* switches or equivalent devices) and Signaling Points of Interconnection ("Signaling POIs") are the locations where carriers interconnect for the exchange of signaling messages between their STPs.

a. SS7 Interconnection Between Carriers and Providers that Own STPs ("SS7 Providers") and Carriers that Do Not Own STPs

Carriers that do not own STPs connect their signaling points (switches) to SS7 Providers' STPs via A-links to gain access to SS7 functions. The provision of A-links and the transport of SS7 messages exchanged across signaling links are signaling services and carriers that order such services, including CRTCs, are responsible for the payment of such services to the SS7 Providers. In addition, carriers that do not own STPs will

---

[16] Carriers that interconnect via Feature Group-C trunks are not required to interconnect SS7 networks.

[17] In this document, any reference to an STP should be construed as meaning an STP pair.

designate the STPs to which other carriers will exchange SS7 messages for each of its signaling points.

If a carrier contracts for SS7 functionality from an SS7 Provider, such carrier will be solely responsible for charges associated with such functions. The remaining provisions of this section address interconnection between such carrier's SS7 Provider and other SS7 Providers, including those that serve other carriers interconnecting with such carrier.

b. SS7 interconnection between SS7 Providers

SS7 Providers are free to negotiate any form of SS7 signaling network interconnection and associated financial responsibility they choose. If they cannot agree, SS7 Providers will implement the default SS7 network interconnection architecture described herein. Under the default architecture, bill and keep would apply for STP ports and transport of call set up messages between the Signaling POI and the signaling point.

SS7 interconnection will be configured such that all SS7 messages use the same path in both directions (*i.e.*, asymmetrical routing of SS7 messages is not a permissible default arrangement).

(1) Default D-link Quad Sets

Under the Plan, each SS7 Provider must designate to another SS7 Provider requesting SS7 interconnection one or more STP pairs to which the other SS7 Provider will interconnect as described below. A SS7 Provider may designate a different number and location of STP pairs to different SS7 Providers to achieve efficiency and reliability.[18] The designated STPs may be the SS7 Provider's own STPs or device providing similar functionality, or, if the SS7 Provider has obtained some SS7 functionality from another SS7 Provider, it will designate the STPs or equivalent devices owned by the other SS7 Provider. If a carrier contracts for SS7 functionality from a third-party SS7 Provider, such carrier will be solely responsible for charges associated with such functions.

SS7 Providers will establish the minimum number of D-link quad sets required to provide connectivity, within the SS7 engineering guidelines, between the STP pairs designated by each carrier. For each D-link quad set, each SS7 Provider will provide on a bill and keep basis the interconnection transport for two D links between its STP pair and two Signaling POIs designated by the other SS7 Provider.[19]

---

[18] A carrier may not unreasonably withhold agreement to a substantially similar SS7 interconnection arrangement it has with another carrier.

[19] In lieu of each SS7 Provide supplying two of the four D-links in a quad set, SS7 Providers may agree to share costs of the entire D-link quad set on a 50:50 basis.

(2) Default Signaling POIs

In the same manner that two SS7 Providers each designate an STP pair to comprise a D link quad set, two SS7 Providers each will designate two Signaling POIs, each of which is associated with a certain STP.

A Hierarchical SS7 Provider is a Hierarchical Network that owns and operates its own STPs.[20] A CRTC SS7 Provider is a CRTC that owns and operates its own STPs. A Non-Hierarchical SS7 Provider is an SS7 Provider that is neither a Hierarchical SS7 Provider nor a CRTC SS7 Provider, and includes non-carrier SS7 Providers.

For SS7 interconnection between (1) two like networks (*i.e.*, between two Hierarchical Networks or two Non-Hierarchical Networks or two CRTCs) and (2) a Hierarchical Network and a CRTC, each SS7 Provider will designate the location of the Signaling POIs associated with its STPs without restriction.

For SS7 interconnection between a Non-Hierarchical Network and a Hierarchical Network, the Non-Hierarchical Network will designate the location of its Signaling POIs within the same LATAs as the STPs designated by the Hierarchical Network.

For SS7 interconnection between a CRTC and a Non-Hierarchical Network, the Non-Hierarchical Network will designate its Signaling POIs within the same LATAs as the STPs designated by the CRTC.

(3) Transition to the Default Arrangement

As a default matter, an SS7 Provider may not require another SS7 Provider to transition to the SS7 default arrangement before the start of Step 3 (July 1, 2007). On or after the date of Step 3, SS7 Providers may mutually agree to implement the default SS7 architecture at any time. Lacking mutual agreement, a SS7 Provider may require another SS7 Provider to conform to the default SS7 architecture with a reasonable cause. The following circumstances, among others, would be deemed to be such a reasonable cause: (1) where either SS7 Provider consolidates or moves its STPs; (2) where either SS7 Provider substantially upgrades its STP equipment; (3) the existing D-link quad set is underutilized; (4) the existing D-link quad set has reached it maximum layers (*i.e.*, is nearing exhaustion).

(4) Call Set-Up Message Transport

The transport of basic SS7 messages between two SS7 Providers for call set-up, maintenance and release purposes (*i.e.*, ISDN User Part or ISUP signaling and TCAP

---

[20] A STP owned and operated by a Hierarchical Carrier that provides SS7 signaling to at least one Access Tandem is deemed to be "Hierarchical" for all signaling points that are served by that STP and owned by the same carrier.

messages exchanged between signaling points (*i.e.* switch or equivalent device) (*e.g.* for CLASS services such as automatic call-back and automatic recall)) within each provider's SS7 network will be on a bill-and-keep basis, beginning with the start of Step 3.[21] Each SS7 Provider will be financially responsible for transport of signaling traffic in both directions between its relevant Signaling POI and its signaling point (*i.e.*, switch or equivalent device). Each SS7 Provider is financially responsible for its own STP functionality.

If a carrier obtains STP functionality or SS7 hubbing service from another SS7 Provider, then the supplying SS7 Provider may assess a charge for such SS7 service. If a company chooses a third party to provide STP functionality on its behalf, that company is totally responsible for all charges by the third party hubbing provider (*i.e.*, for messages in both originating and terminating directions).

c. Database Message Transport and Queries

Database queries and the transport of database query TCAP messages and responses are chargeable functions and shall be paid by the carrier that originates a query to a database service to the service provider.[22]

5. Tandem Transit Provider Use of Interconnection Transport to Deliver Terminating Tandem Transit Service Traffic[23]

When a Hierarchical Carrier and a Non-Hierarchical Carrier interconnect under the default framework in Section II.A.3.c., above, and the Hierarchical Carrier is a Tandem Transit Provider (as defined in Section II.C.2.b., below) delivering traffic to the same Non-Hierarchical Network, the Tandem Transit Provider has the following options for transporting terminating Tandem Transit Service traffic, with default compensation as indicated:

---

[21] Rates for transport of basic SS7 messages related to Tandem Transit Service traffic are addressed in footnote 30 and accompanying text.

[22] With respect to 8YY traffic, the 8YY service provider today is responsible for the cost of queries to the industry toll-free database. The ICF has not yet reached a recommendation as to how this should be handled under the Plan.

[23] The general principle in this section, which is that the carrier using capacity on an interconnection transport facility to carry Tandem Transit Service traffic should bear the full cost of that capacity, should also govern apportionment of the costs of interconnection transport facilities used to deliver Tandem Transit Service traffic if a Non-Hierarchical Network were to provide the Tandem Transit Service.

(a) Self-provision (including third party provision) of such transport by the Tandem Transit Provider, in which case no compensation is due from either party to the other party; or

(b) Use capacity on an interconnection transport facility established by the Non-Hierarchical Carrier, which the Non-Hierarchical Carrier has borne the entire financial responsibility to establish.

(1) For non-dedicated capacity, the Tandem Transit Provider pays the Non-Hierarchical Carrier, 100 percent of the appropriate ILEC interstate common transport rate per minute of use and per minute of use per mile (rated as airline mileage between the tandem and the serving wire center closest to the Edge of the Non-Hierarchical Carrier).

(2) For dedicated capacity (which must be in DS-1 or DS-3 increments), the Tandem Transit Provider pays the Non-Hierarchical Carrier 100 percent of the appropriate ILEC interstate switched dedicated transport for the same capacity and mileage (rated between the tandem and the serving wire center closest to the Edge of the Non-Hierarchical Carrier), including for any entrance facilities.

(c) Use capacity on an interconnection transport facility established by the Non-Hierarchical Carrier, some or all of which the Tandem Transit Provider has provided to the Non-Hierarchical Carrier at a discount pursuant to Section II.A.3.c., above.

(1) For non-dedicated capacity, the Tandem Transit Provider pays or credits the Non-Hierarchical Carrier 50 percent of the appropriate ILEC interstate common transport rate per minute of use and 50 percent of the per minute of use per mile rate for up to the mileage limit for which there is sharing (rated between the tandem and the serving wire center closest to the Edge of the recipient carrier), and 100 percent of the per minute of use per mile rate for additional mileage.[24]

(2) For dedicated capacity (which must be in DS-1 or DS-3 increments), the Tandem Transit Provider will reduce the

---

[24] With respect to traffic originated from a CRTC, the Non-Hierarchical (*i.e.*, Ordering) Carrier's purchase of Tandem Transit Service from the Tandem Transit Provider is a separate transaction from the payment or credit described in this paragraph.

pre-discount price of the interconnection transport facility (including entrance facilities) by the amount of capacity reserved by the Tandem Transit Provider.

6. Non-Hierarchical Carrier's Use of Interconnection Transport to Deliver Tandem Transit Service Traffic to Tandem Transit Provider

When a Hierarchical Carrier and a Non-Hierarchical Carrier interconnect under the default framework in Section II.A.3.c., above, and the Hierarchical Carrier is a Tandem Transit Provider receiving both interconnection and Tandem Transit Service traffic from the same Non-Hierarchical Carrier, the Non-Hierarchical Carrier (*i.e.*, Non-Hierarchical Ordering Carrier) has the following options for delivering the Tandem Transit Service traffic to the Tandem Transit Provider, with default compensation as indicated:

(a) Self-provision (including special access or third party provision) of such transport by the Non-Hierarchical Ordering Carrier, in which case no compensation is due from either party to the other party for the use of the transport facility to deliver Tandem Transit Service traffic originated by the Non-Hierarchical Ordering Carrier to the Tandem Transit Provider; or

(b) Use capacity on an interconnection transport facility established by the Non-Hierarchical Ordering Carrier, some or all of which the Tandem Transit Provider has provided to the Non-Hierarchical Ordering Carrier at a discount pursuant to Section II.A.3.c., above.

(1) For non-dedicated capacity, the Non-Hierarchical Ordering Carrier pays the Tandem Transit Provider 50 percent of the appropriate ILEC interstate common transport rate per-minute-of-use and 50 percent of the per minute of use per mile rate for up to the mileage limit for which there is sharing (rated between the tandem and the serving wire center closest to the Edge of the Non-Hierarchical Ordering Carrier), for each minute of Tandem Transit Service traffic and, in addition, the discounted compensation otherwise due under Section II.A.3.c., above, shall apply equally to each minute of Tandem Transit Service traffic and interconnection traffic sent by the Non-Hierarchical Ordering Carrier.

(2) For dedicated capacity (which must be in DS-1 or DS-3 increments), the Non-Hierarchical Ordering Carrier pays the Tandem Transit Provider the pre-discount price of the interconnection transport facility (including entrance

facilities, if provided) for the amount of capacity reserved by the Non-Hierarchical Ordering Carrier.

B. Modified Default Rules for Interconnection With Covered Rural Telephone Companies.

1. Definition of Covered Rural Telephone Company ("CRTC")

For the purposes of this plan, a "Covered Rural Telephone Company" is an ILEC that, as of July 1, 2005, and excluding those exchanges that are subject to the provisions for acquired exchanges, below, (a) meets the definition of a "Rural Telephone Company" in Section 3(37) of the Communications Act of 1934, as amended, 47 U.S.C. § 153(37), and is not a Bell Operating Company or affiliate thereof, and, in such study areas ("COSAs"), serves fewer than one million access lines; or (b) qualifies as a two percent carrier under the criteria established in Section 251(f)(2) of the Communications Act, 47 U.S.C. § 251(f)(2) with a holding company average of fewer than 19 switched access end user common lines per square mile. A CRTC shall not be treated as a CRTC with respect to customers it serves outside its ILEC serving area. To determine whether a carrier meets the statutory definition of a "Rural Telephone Company" under this section, a carrier shall presumptively be entitled to rely on the categorization published by the Universal Service Administrative Company for purposes of distributing high cost universal service support.

2. Modified Default Rules for CRTCs

The default rules in Section II.A., above, all apply, except as modified as follows:

a. Interconnection between CRTCs and non-CRTCs

A CRTC must establish an Edge within each Contiguous Portion of the CRTC's Study Area (as defined in the following paragraph) within a LATA (or, in a non-LATA state, local calling area). However, if a CRTC operates (itself, or with other carriers) and subtends an Access Tandem located outside of a Contiguous Portion of the CRTC's Study Area, the CRTC may designate that Access Tandem as an Edge for traffic originating from or terminating to such Contiguous Portion of the CRTC's Study Area, in which case the CRTC will be financially responsible for all transport costs in both directions on its side of the Access Tandem. If an Access Tandem is the source of equal access functionality, then the CRTC must designate that Access Tandem as its Edge for carriers that require equal access for interconnection, in which case the CRTC will be financially responsible for all transport costs in both directions on its side of the Access Tandem.

A "Contiguous Portion of the CRTC's Study Area," or any similar phrase includes all exchanges within that study area that share a common boundary with one or more of that CRTC's other exchanges. For purposes of this definition, a remote switch in the same study area as its host shall be considered part of the same Contiguous Portion of the

CRTC's Study Area as its host, regardless of whether the host and remote share a common exchange boundary.

Within a LATA, all CRTCs must also offer interconnection to any carrier at one or more meet points located on the boundary of each Contiguous Portion of the CRTC's Study Area. In the case of a CRTC that operates a tandem that is outside a Contiguous Portion of the CRTC's Study Area, and that tandem is its Edge, that CRTC must offer interconnection at one or more meet points located on the boundary of each Contiguous Portion of the CRTC's Study Area in which the tandem is located.

A carrier (other than another CRTC) interconnecting with a CRTC must either (i) establish an Edge within a Contiguous Portion of the CRTC's Study Area (or, in a non-LATA state, local calling area), or (ii) interconnect with a CRTC at a meet point. A carrier (other than another CRTC) interconnecting with a CRTC will receive traffic from the CRTC at, and the CRTC will deliver traffic to, these points.

When the CRTC and the carrier interconnecting with the CRTC have both established Edges within a Contiguous Portion of the CRTC's Study Area (or, in a non-LATA state, local calling area), or when a CRTC interconnects with another CRTC within the same LATA, the financial responsibility for interconnection transport between these Edges is governed by the rules for interconnection of like networks.

To the extent that the carrier interconnecting with the CRTC uses CRTC-provided transport, the CRTC Terminating Transport Charges apply, see Section III.C.3.b.[25] Similarly, to the extent that the CRTC uses transport provided by a non-CRTC within the CRTC's territory, then the CRTC must compensate the non-CRTC at the CRTC terminating transport rate. The non-CRTC is financially responsible for transport of traffic in both directions on its side of the meet point. When the CRTC provides facilities on both sides of the meet point, the non-CRTC shall be able to purchase, from the CRTC, transport, on the non-CRTC carrier's side of the meet point, to the meet point at a rate no greater than the interstate dedicated switched transport rate as of June 30, 2005 for the neighboring RBOC.

With respect to meet-point interconnection, a CRTC shall publish the location of its existing meet points. Within a Contiguous Portion of the CRTC's Study Area (or, in a non-LATA state, local calling area), a CRTC shall provide mid-span fiber meet

---

[25] If, however, the CRTC elects to adopt a CRTC Terminating Transport Charge Cap equal to zero (*i.e.*, to have full bill-and keep for transport from the meet point to its Edge), then those meet points will serve, in effect, as two-way POIs with the CRTC financially responsible for transport in both directions on its side of the meet point. If the CRTC chooses instead to maintain CRTC Terminating Transport Charges at some positive rate, then interconnecting carriers are financially responsible for the transport of terminating traffic from the meet point to the CRTC End Office.

interconnection at any other point on its network within 2 miles of any such existing meet point.

Edges established to interconnect a CRTC with a Hierarchical Carrier or a Non-Hierarchical Carrier shall not count toward the limit on either carrier's maximum number of Edges in a LATA.

In those circumstances where a carrier interconnecting with a CRTC bears the financial responsibility for the transport of traffic all the way to the CRTC's Edge, the interconnecting carrier may fulfill its responsibility using any combination of: (1) common or dedicated switched transport purchased from the CRTC, subject to the pricing rules set forth in Section II.C.3.b., below; (2) transport provisioned using its own facilities; and (3) transport purchased from a third party.

The CRTC shall offer common and switched dedicated transport for the use of interconnecting carriers discharging this responsibility. The CRTC's rates for such transport shall be subject to constraints described in Section III.C.3.b., governing the CRTC Terminating Transport Charge.

b. Interconnection between CRTCs within the Same LATA

For interconnection between a CRTC and another CRTC located within the same LATA (or in a non-LATA state, local calling area), each carrier has the responsibility to transport traffic originating on its network to the Edge of the destination network. A CRTC is not required to establish an Edge within the service area of another CRTC in the same LATA to comply with this rule.

3. CRTC Acquisitions of Exchanges

a. Transactions between CRTCs

Where a CRTC acquires CRTC exchanges, there should be no change in the CRTC status of the buyer or its acquired properties.

b. Transactions between a CRTC and a non-CRTC

The following principles shall govern CRTC acquisitions of exchanges that were not, prior to the sale, part of a CRTC network:

(1) General Principles

i) Acquisitions should be allowed to take place, neither encouraged nor inhibited by the rules adopted under this Plan.

ii) The Plan should permit "graceful growth" for CRTCs, and thus permit these carriers to grow without losing CRTC status for study areas where they qualified as CRTC as of 7/1/05.

(2) Implementation

The following specific provisions implement these principles and shall apply to exchanges acquired on or after the date this Plan is filed with the FCC:

(a) Rural Exchanges Defined

As used here, "Rural Exchanges" are those exchanges in a single state being offered for sale by a single seller which, standing as an independent study area, would meet the definition of a "Rural Telephone Company" contained in Section 3(37) of the Communications Act, 47 U.S.C. § 153(37).

If the same buyer and seller consummate a series of transactions within any 12-month period involving one or more study areas (or parts of one or more study areas) within the same state that were classified as non-rural immediately prior to the sale, and each of the transactions in such series taken individually would be considered a sale of Rural Exchanges under this definition but the exchanges involved in the series, taken together, would not, then the FCC may review the series to determine which of the acquired exchanges, if any, should be treated as Rural Exchanges for purposes of these acquisition rules.

(b) Effects on Network Architecture When Exchanges Are Acquired from a Non-CRTC

The acquired exchanges will have either Hierarchical Network or Non-Hierarchical Network status under the terms of the Plan. (In other words, they will not have CRTC status. As a consequence, for example, the acquiring carrier will not be permitted to charge for CRTC Terminating Transport for those Exchanges and the acquiring carrier will also be responsible for any Tandem Transit Service charges associated with those exchanges.) If the buyer establishes or relocates Edges as a result of the transaction (*e.g.*, as a result of the reclassification of the acquired exchanges from Hierarchical to Non-Hierarchical), such changes shall be subject to the provisions of the Plan governing the establishment or relocation of Edges in Section II.A.2. of the Plan. Such changes shall become effective on the consummation date of the sale, but in no event sooner than 6 months after the buyer provides the notice of such change specified in Section II.A.2. of the Plan, notwithstanding any shorter notice period otherwise specified in that Section.

(c) Revenue Recovery for Acquired Exchanges; Safety Valve II

i. The buyer's universal service support for the acquired lines would be computed without regard to net settlements/reciprocal compensation revenue.

ii. Where the buyer purchases exchanges that were subject to federal price cap regulation and converts them to rate-of-return regulation, revenue recovery will operate as described in Section III.F.2. of the Plan for rate-of-return carriers, except as provided in paragraph (2)(a), above, using seller's cost and demand figures (and the seller's actual intrastate access revenues, if any) associated with the exchanges for the last full year prior to the sale. This may result in an adjustment to the per-line amount of ICRM support as defined in the Plan. Note that the acquisition of exchanges would not result in the reclassification of support from ICRM to TNRM, thus support would continue to be available to all ETCs in the acquired exchange areas.

iii. Where the buyer purchases exchanges that were subject to federal price cap regulation and keeps them under price caps, revenue recovery initially will be based on the seller's revenue recovery for the acquired exchanges, as described in section III.F.1. of the Plan for interstate price cap LECs. In other words, buyer will take seller's revenue-per-line ("RPL") for the acquired exchanges as of the date of sale, including the interstate SLC, any Universal Service amounts seller was receiving, any ICRM amounts due under the Plan, and any remaining inter-carrier charges permitted under the Plan.

The price cap buyer also would be eligible to receive additional ICRM support based on new loop investment (under the "Safety Valve" mechanism described in Section 54.305 of the Commission's rules (as modified by section V.B.8. of the Plan), and a new mechanism ("Safety Valve II") to permit recovery of non-loop investment in acquired exchanges. Under Safety Valve II:

1. Buyer would be eligible for Safety Valve II support immediately following the acquisition, based on a showing of actual investment in the acquired exchanges.

2. The "base line" measure of regulated non-loop expense should be the seller's "regulated non-loop expense" as of the year in which the transaction closes. Base line regulated non-loop expense is

calculated using the seller's net investment[26] in non-loop facilities multiplied by the seller's applicable annual carrying charge factor using an 11.25 percent rate of return on that net investment and statutory income tax rates.

3. Buyer will be eligible to recover 50 percent of the difference between its regulated non-loop expense and the "base line" regulated non-loop expense for the acquired exchanges. The buyer's regulated non-loop expense is calculated based on the buyer's net investment[27] in non-loop facilities for the acquired exchanges multiplied by the buyer's applicable annual carrying charge factor using an 11.25 percent rate of return on that net investment and statutory income tax rates. The calculation of Safety Valve II support can be made in any year (or partial year) following the acquisition using that year's regulated non-loop expense and base line expense amounts.

4. Safety Valve II support would be an exogenous adjustment to the buyer's allowed revenue; thus, pursuant to Section III.F.1.c.(1) of the Plan, a carrier could not increase or decrease its Safety Valve II support by virtue of its decision not to price SLCs at the cap, or to take advantage of SLC pricing flexibility.

5. This Safety Valve II support for newly acquired exchanges that were previously non-CRTC would be portable to other ETCs on the same terms as other ICRM support.

6. This Safety Valve II support will not be capped for the duration of the Plan.

iv. These rules will apply whether the buyer purchases a partial study area or a whole study area from the seller.

(d) Effect on Seller

In the case of the sale of a partial study area that is converted from price caps to rate-of-return regulation, the seller will make an appropriate one-time exogenous adjustment to its allowed revenue and, if seller is receiving any ICRM support for the affected

---

[26] "Net investment" is calculated in the manner prescribed for calculation of "average net investment" on line 4 of FCC form 492A.

[27] See immediately preceding footnote.

exchanges, the seller will revise its calculation of ICRM support to reflect the sale of the rural exchanges.

C. Tandem Transit Service

Under this Plan, a carrier that has an obligation to deliver its traffic to another carrier's Edge, or, in the case of traffic exchanged with a CRTC, to accept CRTC-originated traffic within a Contiguous Portion of the CRTC's Study Area (including at a meet point), may choose to satisfy that obligation by direct interconnection (using its own facilities or facilities obtained from another carrier), or by indirect interconnection through a third party. Tandem Transit Service is a switched transport function that is provided by a third party and that is used to effectuate interconnection between two carriers within a LATA (or in a non-LATA state, local calling area) that are not directly interconnected.[28] Tandem Transit Service is not included in the interconnection obligations of the Tandem Transit Provider (as defined in paragraph II.C.2.b., below) established above.

The FCC should find prospectively that Tandem Transit Service is an interstate common carrier service and that, accordingly, the requirements of section 214 and Part 63 of the Commission's rules would govern any discontinuance or withdrawal of Tandem Transit Service.[29] In addition, therefore, Tandem Transit Providers cannot unjustly or unreasonably discriminate among requests for Tandem Transit Service. All ILECs that are providing Tandem Transit Service on the day before the beginning of Step 3 of the rate transition will, if the Plan is adopted in its entirety as proposed, continue to provide Tandem Transit Service through the eight-year term of this Plan.

During the first two years of the Plan, rates for Tandem Transit Service shall be no higher than the rates for such service on June 30, 2005, or the day before the first day of this Plan.[30] During the three-year period beginning at the start of Step 3 of the rate transition, rates for this service shall be computed to produce no more than the Average Revenue Per Minute Limit calculated using the methodology in Section III.C.3.a., below. For the following three years, *i.e.*, beginning on the first day of the sixth year of the Plan, this cap

---

[28] A CRTC may also provide transit between (1) any other point on its network within a Contiguous Portion of the CRTC's Study Area on its network within two miles of an existing meet point; and (2) a meet point located outside of that Contiguous Portion of the CRTC's Study Area.

[29] Upon expiration of the Plan, all signatories may argue without prejudice that any provision or combination of provisions of the Communications Act compels or does not compel the offering of Tandem Transit Service.

[30] The cap will be adjusted to include SS7 functionality if SS7 is not included in existing transit rates.

shall increase as described in Section II.C.3.b, below. Effective July 1, 2013, this cap shall expire.

1. Service to be provided

Tandem Transit Service provided will include tandem switching and tandem switched transport (also called common transport), or the functional equivalent, between the following locations:

- With respect to Tandem Transit Service traffic being delivered from a Non-Hierarchical Carrier to any carrier, between the tandem switch and the Non-Ordering Carrier's Edge;[31]

- With respect to traffic being delivered from a CRTC to any carrier, between the originating CRTC's meet point with the Tandem Transit Provider and the Ordering Carrier's Edge.[32]

Tandem Transit Service provides functions currently obtained for local traffic under local transit agreements and for access traffic through jointly provided access.

2. Roles of each carrier in a Tandem Transit Service Arrangement

There are three distinct roles in a Tandem Transit Service arrangement: Ordering Carrier, Tandem Transit Provider, and Non-Ordering Carrier.[33]

a. Ordering Carrier

When a carrier that is financially responsible to transport traffic to another carrier's Edge, or, in the case of traffic exchanged with a CRTC, is responsible for accepting delivery of traffic within a Contiguous Portion of the CRTC's Study Area (including at a meet point), chooses to do so through the use of Tandem Transit Service, it is the Ordering Carrier for such traffic. The Ordering Carrier is financially responsible for the delivery of Tandem Transit Service traffic to the point the Tandem Transit Provider has designated to accept such traffic and for the payment of Tandem Transit Service fees to

---

[31] Where the terminating carrier is a CRTC, the Tandem Transit Provider may elect to deliver Tandem Transit Service traffic to the meet point with the terminating CRTC or to the terminating CRTC's Edge.

[32] See preceding footnote.

[33] Because Tandem Transit Service roles do not align with originating and terminating carriers those terms are avoided. For example, if the originating carrier is a CRTC, the terminating carrier may be the Ordering Carrier.

the Tandem Transit Provider. Ordering carriers retain the responsibility for delivery of traffic to the Non-Ordering Carrier's Edge (or, when the Non-Ordering Carrier is a CRTC, to accept delivery of CRTC-originated traffic within the CRTC serving area (including at a meet point)), to resolve any business disputes with the Non-Ordering Carrier, to pay any charges assessed by the Non-Ordering carrier on that traffic, and to bill the Non-Ordering Carrier for any charges the Non-Ordering Carrier owes to the Ordering Carrier. Ordering Carriers must ensure that the trunk groups between the Ordering Carrier and the Tandem Transit Provider are not chronically or persistently underutilized in accord with section II.A.2.b., above.

b. Tandem Transit Provider

The Tandem Transit Provider is the carrier that indirectly interconnects the Ordering Carrier with the Non-Ordering Carrier. This carrier owns the transit tandem, manages its tandem switching resources, provides the Tandem Transit Service and collects fees therefor (*i.e.*, for tandem switching and common transport). This carrier may be a non-incumbent carrier competing for Tandem Transit Service business. The Tandem Transit Provider is responsible to deliver the Tandem Transit Service traffic to the Non-Ordering Carrier's Edge (or, where the Non-Ordering Carrier is a CRTC, to deliver such traffic to and accept such traffic from the meet point with the CRTC). However, the Tandem Transit Provider is not financially responsible for: intercarrier compensation related to Tandem Transit Service traffic, such as terminating access and reciprocal compensation charges during Steps 1-3; the Uniform Termination Charge (beginning with Step 4); or for CRTC Terminating Transport Charges. The Tandem Transit Provider is not obligated to bill the Ordering Carrier or Non-Ordering Carrier for such intercarrier compensation. The Tandem Transit Provider is not obligated to serve as the intermediary arbiter of disputes between the Ordering and Non-Ordering Carriers, except to the extent that the dispute is caused by the functionalities provided by the Tandem Transit Provider or unless the Tandem Transit Provider chooses to do so as part of an optional and premium service that goes beyond the Tandem Transit Service described herein. Where the Tandem Transit Provider makes use of a facility for which an Ordering or Non-Ordering Carrier bears a financial obligation, it will compensate that carrier under terms described in II.A.5-6. To the extent that Tandem Transit Service traffic is commingled with interconnection traffic, Tandem Transit Providers will use relevant call-identifying and call record information to accurately bill the carrier that is financially responsible for compensating it for the Tandem Transit Service.[34]

---

[34] The ICF recognizes that issues related to the provision of call detail information/call records needed in certain cases for billing purposes among carriers participating in transiting arrangements, the charges for such records, if any, and the relationship of any such charges to the revenue caps on Tandem Transit Service established herein, require further definition and resolution. The ICF commits to working toward a mutually agreeable solution to these billing issues if they are not resolved by the ICF Plan structure.

c. Non-Ordering Carrier

The Non-Ordering Carrier is the carrier to which the Ordering Carrier is indirectly interconnected by the Tandem Transit Provider. A Non-Ordering Carrier cannot refuse to accept Tandem Transit Traffic from any Tandem Transit Provider with which the Non-Ordering Carrier directly interconnects, nor may a CRTC Non-Ordering Carrier refuse to deliver Tandem Transit Service traffic as specified by the Ordering Carrier to any Tandem Transit Provider with which that CRTC Non-Ordering Carrier directly interconnects.[35] A CRTC will be a Non-Ordering Carrier for both originating and terminating traffic, except when it sends traffic to another CRTC via a Tandem Transit Provider. Thus, in such cases, where a CRTC originates traffic to be delivered, via a Tandem Transit Provider, to a carrier other than another CRTC in the same LATA, the Ordering Carrier selects the Tandem Transit Provider and is financially responsible for payment of Tandem Transit Service charges to such Tandem Transit Provider for such traffic (See note 34, above).

An illustrative, more detailed list of responsibilities applicable to Ordering Carriers, Non-Ordering Carriers, and Tandem Transit Providers, is attached as Appendix A to this Plan.[36]

3. Upper Limits on Rates for Tandem Transit Service

These provisions will replace all forms of intercarrier compensation for ILEC switched transiting services (including services provided under tariff, interconnection agreement or commercial agreement) that exist as of June 30, 2007.

a. July 1, 2007-June 30, 2010

In any study area where ILEC interstate and intrastate rates for jointly provided tandem switched access differ on June 30, 2007, they will be brought into parity on July 1, 2007, by reducing rates in the jurisdiction where rates are higher. The effect of this change on ILEC access revenues will be estimated at the outset of the plan, based on rates in effect on June 30, 2005 and 2004 base period demand, and included in the Adjusted Access Revenue Shift Per Line in III.F.1.a.

---

[35] Under the Edge rules, a Non-Ordering Carrier cannot refuse direct interconnection.

[36] All interconnecting carriers have a vested interest in maintaining the efficiency and reliability of trunking. The ICF will explore ways to assure meaningful participation in the management and engineering of trunk groups by a party that does not have control of such trunk groups but has traffic for which it bears financial responsibility on such trunk groups.

Rates for Tandem Transit Service shall be computed pursuant to Section 201 and 202 of the Act, to produce no more than an Average Revenue Per Minute Limit for a three-year period commencing at the start of Step 3 of the rate transition as follows: in each ILEC study area the ILEC's transiting service revenues (interstate and intrastate switched access transiting, local transiting, CMRS transiting and any other transiting, all calculated at the June 30, 2005 rates, as determined in the paragraph above, and evaluated at 2006 base period demand) will be summed and divided by 2006 base period transiting minutes.

b. July 1, 2010 – June 30, 2013

Beginning on the date six years after the start of this Plan, and continuing until the end of the initial term of the Plan, Tandem Transit Service rates will continue to be subject to the requirements of Sections 201 and 202 of the Communications Act that rates be just, reasonable, and not unreasonably discriminatory. In addition, each Tandem Transit Provider will remain subject to the discontinuance obligations of Section 214 of the Act.

Each year, starting July 1, 2010, the Average Revenue Per Minute Limit calculated in Section III.C.3.a., above, shall increase by 3 percentage points per year.

4. Additional or Optional Features

The Tandem Transit Provider may elect to offer new optional features, the rates for which will not be subject to the Average Revenue Per Minute Limit. For example, the Tandem Transit Provider may offer arrangements that provide reserve transit capacity to allow outage recovery in the event of the failure of a direct interconnection facility or alternate routing to different points on the Ordering Carrier's network. Such an arrangement would be considered a new service. The Tandem Transit Provider may establish reasonable charges for such arrangements, but the per-minute charges for any traffic carried would be subject to the Average Revenue Per Minute Limit. The Ordering Carrier will choose whether to purchase any such optional features.

5. Traffic Volume Limitations and Premium Charges

The Tandem Transit Service is subject to certain traffic volume limitations.

(a) An Ordering Carrier may order Tandem Transit Service from a Tandem Transit Provider for up to a total of 400 thousand minutes of use (MOU) between two switch points per month without restriction, and without regard for the direction in which the minutes travel. Traffic volumes are measured between two switch points between which traffic is transmitted using Tandem Transit Service, *i.e.*, not between a group of switches owned by one carrier and a group of switches owned by another carrier.

(b) If an Ordering Carrier sends (or, in the case of traffic originated by a CRTC, receives) more than an average of 400 thousand MOU (as defined above) between two switch points for three consecutive months, the

Tandem Transit Provider may give notice to the Ordering Carrier that it has exceeded the Tandem Transit Service traffic threshold. The notice commences a 3-month grace period. Following the grace period, for each month that the Ordering Carrier exceeds the 400 thousand MOU threshold (as defined above), the Tandem Transit Provider may assess a premium rate for all Tandem Transit Service MOU for which the Ordering Carrier is responsible in that month between those two switch points that does not exceed the sum of the tandem switched (common) transport rate and two times the tandem switching rate for traffic between the two switch points. If the Ordering Carrier does not exceed the 400 thousand MOU threshold (as defined above) for a six-month period, the notice expires, and no premium would apply thereafter unless a new notice was issued and a new grace period had passed.

(c) An Ordering Carrier that exceeds the 400 thousand MOU threshold (as defined above) shall not be limited to "direct final trunk group" interconnection, but may continue to rely on Tandem Transit Service to route overflow traffic that exceeds the capacity of its established direct interconnection facilities.

(d) Premium charges assessed under paragraph (b), above, shall not be subject to the Average Revenue Per Minute Limit. The incremental revenue from any premium charges assessed under paragraph (b), above, shall not be included in any calculation to determine whether the ILEC is complying with the Average Revenue Per Minute Limit.

(e) A Tandem Transit Provider shall not be entitled to assess a premium charge to the extent that the Ordering Carrier timely placed orders for grooming or facilities necessary to eliminate the overage from the Tandem Transit Provider, but the Tandem Transit Provider failed to fulfill those orders. To the extent that the Non-Ordering Carrier's lack of capacity causes the continued overage, the penalty shall not apply for a period of 2 additional months. Ordering Carriers may be able to pursue damages claims against third parties that cause continued overages.

6. Reasonable Limits on Use of Tandem Transit Service

Tandem Transit Providers may constrain the use of Tandem Transit Service in situations of tandem congestion or exhaust, as identified using standard industry congestion relief measures, according to the principles identified in this section.

(a) The parties are encouraged to come to a mutually agreeable solution to relieve the tandem congestion or exhaust.

(b) In cases of port exhaust or processing capacity exhaust, despite efficient utilization as described above, where the parties cannot reach agreement,

the Tandem Transit Provider may constrain Tandem Transit Service use, but must adhere to the following principles:

(i) Criteria for migrating Tandem Transit Service traffic off of the tandem must be uniformly applied in a nondiscriminatory manner;

(ii) The Tandem Transit Provider's process for identifying Tandem Transit Service traffic to be migrated off of the tandem must be made public; and

(iii) The Tandem Transit Provider must provide reasonable advance notice to the Ordering and Non-Ordering Carriers before it discontinues providing all or a portion of the affected Tandem Transit Service.

7. Competitive Tandem Transit Providers

The tariffed rates of Tandem Transit Providers other than ILECs may not exceed ILEC Tandem Transit Service rates in the ILEC's study area, in much the same way that CLEC access rates are benchmarked against ILEC rates today. This benchmark will also apply where the Ordering Carrier is a Tandem Transit Provider.

III. Transition to the Uniform Intercarrier Traffic Exchange and Compensation Plan

There will be a transition plan to move all intercarrier compensation rates from existing levels, to the levels under the Plan. The transition to a uniform termination rate with a uniform structure would be completed over the first thirty six months, in four steps; the complete transition to "bill-and-keep" for termination would consist of seven steps completed over a seventy-two month period. Intra-network transport moves to "bill-and-keep" at the end of twenty-four months, except that a CRTC may elect to charge a CRTC Terminating Transport Charge, as defined in Section III.C.3.b., below. Current ILEC interstate and intrastate access charges will be recovered from end user charges, from new federal support mechanisms established under this Plan (where necessary), from a transitory Uniform Termination Charge, as defined in Section III.C.3.a., below, and, for CRTCs, a Terminating Transport Charge. In addition, as discussed above, carriers will continue to charge each other for the provision of interconnection transport and Tandem Transit Service.

A. Access Charge Transition

1. ILEC Access Charges

Except with respect to charges for transit and interconnection transport (discussed in Sections II.B and C, below), ILEC interstate and intrastate switched access rates will transition to "bill-and-keep" over 7 steps. Except as described below, at no point may a

carrier charge higher rates for terminating than for originating switched access rate elements in a particular jurisdiction. During the first four steps, access charges are transitioning to a uniform termination charge of $.000175/minute. During these first four steps, all originating and terminating access charges are eliminated other than interconnection transport, a uniform termination charge, transit and, for CRTCs, terminating transport. The uniform termination charge of $.000175/minute (described further in Section II.C, below) remains in place for two years, and then is phased to bill-and-keep in two steps, reaching bill-and-keep at the start of Step 7.

a. Initial Four Step Process

ILEC interstate and intrastate access charges shall transition to a Uniform Termination Charge, at a rate of $.000175/minute, in four steps as follows:

(1) At the start of Step 1 (effective July 1, 2005) aggregate interstate and intrastate switched access revenue for demand transitioning to bill-and-keep by Step 7 (*i.e.* except for Tandem Transit Service revenues, interconnection transport, and CRTC Terminating Transport Charges) will be reduced by 25 percent off the revenue that would have been generated by the rates in effect as of 06/30/05 (the day before the start of Step 1), using 2004 Base Period demand. Intrastate and interstate switched access rates transitioning to bill and keep, other than Facilities-Based Transport Charges,[37] will be reduced in uniform proportion to generate the required switched access revenue reduction using 2004 Base Period demand.

(2) At the start of Step 2 (effective July 1, 2006) aggregate interstate and intrastate switched access revenue for demand transitioning to bill-and-keep will be reduced by 33 percent off the revenue that would have been generated by the rates in effect as of 06/30/06 (the day before the start of Step 2), using 2005 Base Period demand. Intrastate and interstate switched access rates other than facilities-based transport charges will be reduced in uniform proportion to generate the required switched access revenue reduction. If switched access rates, other than Facilities-Based Transport Charges and other than a termination rate of $.000175/minute, are fully eliminated, these Facilities-Based Transport Charges must be reduced using 2005 Base Period demand, but, for CRTCs, not below the levels of any CRTC Terminating Transport Charge to be implemented in Step 3.

---

[37] "Facilities-Based Transport Charges" exclude residual charges such as the TIC that are not associated with specific transport facilities or services. It does include dedicated transport, common transport, tandem switching, entrance facilities and other rate elements directly associated with those elements. Facilities-Based Transport Charges will be flash-cut in Step 3.

(3) At the start of Step 3 (July 1, 2007), all Facilities-Based Transport Charges for demand transitioning to bill-and-keep will be flash cut to bill-and-keep, and interconnection transport and Tandem Transit Service will be flash cut to the new rates under this Plan. In addition, CRTCs flash cut to the new CRTC Terminating Transport rates. If the reduction in aggregate interstate and intrastate switched access revenue as a result of these flash cuts is less than 50 percent off the revenue that would have been generated by the rates in effect as of June 30, 2007 (the day before the start of Step 3) using 2006 Base Period demand, each remaining interstate and intrastate switched access rate element will be reduced in uniform proportion until the aggregate switched access revenue reduction reaches 50 percent. However, once the termination rate reaches the Uniform Termination Charge level of $.000175/minute, all further reductions are taken from all other access rates.

(4) At the start of Step 4 (July 1,2008) all interstate and intrastate switched access rates for demand transitioning to bill and keep will be eliminated, other than the Uniform Termination Charge of $.000175/minute.

b. Targeting to Achieve Parity by All ILECs

If the average intrastate switched access revenue per minute for access other than Facilities-Based Transport Charges for an ILEC study area is 20 percent greater than the average interstate switched access revenue, other than Facilities-Based Transport Charges, per minute, or vice versa, instead of reducing each access rate element (other than a Facilities-Based Transport Charge rate element) as indicated in steps (1)-(4), above, the ILEC must use all of the aggregate access revenue reduction for the given year to uniformly reduce all switched access rates other than Facilities-Based Transport Charge rates in the "jurisdiction" with the higher of the two average revenues per minute until that average revenue per minute is within 20 percent of the other average revenue per minute.[38] The average switched access revenue per minute in each jurisdiction will be calculated by dividing total switched access revenues, other than those for Facilities-Based Transport Charges, for each jurisdiction by access local switching minutes for that jurisdiction respectively.

(1) When rates are within 20 percent, a carrier may choose to reduce the higher rate to parity, but is not required to do so.

(2) Except as required by Section III.A.1.c., below, when a carrier is no longer targeting rates to the higher jurisdiction, the reductions will be applied in uniform proportion to lower all access rates, other than Facilities-Based

[38] This provision will not be applicable in states where state PUCs have ordered mirroring of interstate and intrastate switched access rates.

Transport Charges, in both "jurisdictions." Facilities-Based Transport Charges will be reduced solely through the flash-cut in Step 3 (unless required as described in Steps III.A.1.a.(1) and (2), above).

(3) An ILEC using targeting must always make an equivalent aggregate dollar reduction in total access revenues as would have occurred had the ILEC made reductions as specified for that year in steps III.A.1.a.(1) through (4) (whichever is applicable).

(4) In a multistate interstate filing entity, the ILEC may allocate the dollar equivalent of what would otherwise be interstate access reductions for the filing entity among the study areas included in that filing entity, provided that in aggregate all reductions are taken in any given year. Targeting would not affect the ability of an ILEC to average interstate access rates into a multistate filing entity during the transition.

(5) This targeting does not affect the transition for non-access rates, such as reciprocal compensation/ISP-bound.

c. Targeting of Originating Switched Access by CRTCs

Once interstate and intrastate switched access rates (other than Facilities-Based Transport Charges) are within 20 percent (or at parity if the ILEC opts to bring the rates to parity), a CRTC will first reduce originating interstate and intrastate switched access rates (other than Facilities-Based Transport Charges) uniformly until those rates reach an Originating Threshold. The Originating Threshold will be determined by multiplying the June 30, 2005 interstate weighted (by local switching MOUs) average local switching rate for price cap LECs[39] by: in Step 1, 75 percent; in Step 2, 50 percent, in Step 3, 25 percent; in Step 4, 0 percent. At any step, once the originating switched access rates reach the Originating Threshold, the CRTC will then apply any reductions to reduce uniformly originating and terminating interstate and intrastate switched access rates (other than Facilities-Based Transport Charges). However, once the termination rate reaches the Uniform Termination Charge rate level of $.000175/minute and terminating transport reaches the levels of any CRTC Terminating Transport Charge to be implemented in Step 3, all other reductions will be taken to other access rates. At no time may a CRTC raise

[39] If data lag is a problem, this average could be calculated as of the tariff year immediately prior to Step 0 (e.g. Tariff Year 2003, assuming that Tariff Year 2005 is Step 1).

terminating switched access rates above the level of the Uniform Termination Charge and CRTC Terminating Transport Charge described below.[40]

At Step 3, if the elimination of the CRTC's switched access transport rates (excluding CRTC Terminating Transport that flash cuts to the new rates established under this Plan) produces a reduction in base period adjusted revenues of less than 50 percent (using 2006 demand), the CRTC shall, once it has brought interstate and intrastate switched access rates within 20 percent (or to parity if it elects to continue to reduce the higher rates to parity), continue to target its switched access reduction uniformly to reduce its originating non-transport access rates down to a threshold that is 25 percent of the 2004 nationwide average interstate switched access local switching rate for price cap ILECs.

d. Alternative for Rate-of-Return CRTCs.

In lieu of the first step of the transition in III.A.1.a.(1), above, a rate-of-return CRTC may elect the following transition (price cap CRTCs can achieve parity through targeting as described in III.A.1.b., above):

At the start of Step 1, reduce the higher of interstate or intrastate switched access rates (other than Facilities-Based Transport Charges) to the lower of the two rates. The CRTC would not be required to lower its average access rates in the higher jurisdiction below an average in that jurisdiction of $.0125 per minute (calculated by dividing total non-transport switched access revenues by local switching minutes), unless the CRTC did not achieve a reduction in aggregate access revenue equivalent to 25 percent off the revenue that would have been generated by the rates in effect as of June 30, 2005 (the day before the start of Step 1), using 2004 Base Period demand, in which case the CRTC would, in uniform proportion, reduce switched access rates, other than for Facilities-Based Transport Charges, until it had achieved a 25 percent aggregate switched access revenue reduction.

e. Targeting by Certain Price Cap Carriers

Any price cap carrier that reverses an allocation of Pooled Local Switching Revenue made under Section 61.48(m)(2) of the Commission's rules, 47 C.F.R. § 61.48(m)(2), shall first target its access charge reductions under this section to eliminate any resulting increase in the carrier common line charge caused by such reversal.

---

[40] This does not change existing pricing flexibility rules consistent with the pricing rules in the Plan associated with the Uniform Termination Charge and the CRTC Terminating Transport Charge.

2. CLEC Access Charges

CLEC switched access rates will be reduced so that they are no higher than the competing ILEC switched access rates in the same area for the same "jurisdiction" in the same year.

A carrier competing in the CRTC's service territory may not charge a terminating transport rate higher than the CRTC Terminating Transport Charge of the CRTC for transport to its Edge within such service territory. Such rate would be offered to any carrier that needs to reach the competitor's Edge in the CRTC territory for traffic bound for customers in the CRTC's territory. This rule affects rates only and does not alter any provision of the default network interconnection rules described in this Plan.

B. ILEC Switched Transiting Service

Through June 30, 2007, rates for transit would continue to be determined under the applicable existing mechanism. Until network interconnection transport obligation changes take effect at step 3, carriers originating traffic subject to obligations described in section 251(b)(5) of the Act (including ISP-bound traffic regardless of the applicability of 251(b)(5)), are responsible for the use of and payment to tandem transit and interconnection transport service providers. With respect to this traffic, originating carriers are also responsible for any applicable termination charges.

Beginning on July 1, 2007, Tandem Transit Service rates will be set according to the rate commitment or benchmark, described in Section II.C.3., above.

Any reduction in switched access revenues as a result of moving switched transiting rates to parity will be incorporated into the calculation of the Adjusted Access Revenue Shift Per Line (as described in Section III.F.1, below), and recovered from end users and, if necessary, the new federal support mechanisms established under this Plan.

C. Uniform Termination Charge and CRTC Terminating Transport Charges

1. Termination

Termination is the acceptance of traffic routed according to NPA-NXX or LRN by the carrier responsible for that NPA-NXX or LRN at its designated Edge for delivery to the called party, *i.e.*, the Terminating Carrier. If a carrier[41] assigns its terminating Edge responsibilities in the LATA associated with a particular NPA-NXX or LRN to another carrier, the assignee (*i.e.*, Edge operator/owner) is the Terminating Carrier. If a reseller

---

[41] To the extent telephone numbers are directly assigned to Providers of Information Services (PIS), additional modifications to the Plan may be needed.

adopts the Edges of the underlying carrier, the underlying carrier (*i.e.*, the Edge operator/owner) is the Terminating Carrier.[42]

2. CRTC Terminating Transport

CRTC Terminating Transport refers to the interconnection transport a CRTC provides to carriers for the delivery of terminating traffic from any point within its territory to its designated Edge as described in Section II.B.2., above.

A non-CRTC carrier with an Edge located in a CRTC service area may assess a terminating transport charge when a carrier with financial responsibility for interconnection transport to reach that non-CRTC carrier's Edge uses facilities controlled by that non-CRTC carrier within the CRTC service area to reach that non-CRTC carrier's Edge. Such charge may not exceed the CRTC Terminating Transport Charge for the same service in that same service area.

3. Usage subject to the Uniform Termination Charge and CRTC Terminating Transport Charges

a. Uniform Termination Charge

Beginning at Step 4, each carrier that terminates traffic to end users will institute a Uniform Termination Charge of $0.000175 per minute for all switched minutes for which it provides termination (excluding called party pays calls, *e.g.*, 8YY, for which the called party pay service provider also provides termination). At Step 6 of the transition, commencing on July 1, 2010, the Uniform Termination Charge shall be reduced by 50 percent, to $0.0000875 per minute. At Step 7, commencing on July 1, 2011, the Uniform Termination Charge shall be eliminated.

b. CRTC Terminating Transport Charges

All switched transport provided by a CRTC to reach its Edge, where another carrier has the financial responsibility to do so, is subject to the CRTC Terminating Transport Charges, regardless of whether that transport is provided on a dedicated or per minute basis, and regardless of whether the traffic is local, toll, ISP-bound or EAS, except that CRTC Terminating Transport Charges will not apply to called party pays-type traffic, *e.g.*, 8YY, for which the CRTC is the called party pay service provider. A CRTC may not assess CRTC Terminating Transport Charges (including entrance facilities charges) on traffic that is delivered to its Edge by another carrier over facilities that the CRTC does not control.

---

[42] A CLEC using a UNE platform is not a reseller for purposes of this provision and is treated as a facilities-based carrier.

The CRTC Terminating Transport Charge rate shall be determined subject to the following:

(1) The weighted average of common and dedicated switched terminating transport rates across a holding company may not exceed $0.0095 per terminating minute, or such lower rate that the CRTC elects (the "CRTC Terminating Transport Charge Cap"). Compliance with the CRTC Terminating Transport Charge Cap shall be measured by calculating total terminating switched transport revenue ÷ total terminating switched transport MOU among all affiliated CRTCs that elect to assess CRTC Terminating Transport Charges. For avoidance of doubt, the CRTC Terminating Transport Charge Cap also applies to CRTCs that do not have a holding company structure, but have only one study area.

(2) Prior to the July 1, 2005 annual filing, a CRTC must declare its CRTC Terminating Transport Charge Cap. A price cap CRTC must calculate its Total Access Revenue Shift in Section III.F.1.a., below, based on this declaration. A rate-of-return CRTC must calculate its Total Revenue Recovery Amount in Section III.F.2.a., below, based on this declaration. At the end of Step 2, a CRTC may make a supplemental declaration in which it elects to adopt a CRTC Terminating Transport Charge Cap different from the one it initially used to calculate its Total Access Shift or Total Revenue Recovery Amount, but in no event greater than the levels specified in this section. If the CRTC makes such a supplemental declaration, it must recompute the Total Access Shift or Total Revenue Recovery Amount (as applicable) as if it had declared such revised CRTC Terminating Transport Charge Cap at the outset of the transition, make all required reductions for Step 1 and Step 2, and use those recomputed rates as its rates going forward for determining Step 3 (and subsequent) rates.

(3) The weighted average of common and dedicated switched CRTC Terminating Transport Charges within any single study area within a multi-study area holding company may not exceed $0.013 per terminating minute, measured in the same way. Compliance with this limit shall be measured by calculating total terminating switched transport revenue ÷ total terminating switched transport MOU for the study area.

(4) These caps shall be established using demand from previous year as base period.

(5) The Responsible Carrier (*i.e.*, the carrier paying the CRTC Terminating Transport Charges) shall have the right to purchase CRTC Terminating Transport from the CRTC on a flat-rated basis or self-provision such facilities in accordance with physical interconnection provisions of this

plan. The CRTC may establish different rates for DS-1 facilities used to transport traffic to the CRTC Edge.[43] The rate for such facilities must maintain the crossover point between common transport and DS-1 transport that is at or below the number of minutes as of June 30, 2007 when setting CRTC Terminating Transport Charges within a study area.[44]

(6) The CRTC may establish different CRTC Terminating Transport Charges for DS-3 facilities used to transport traffic to the CRTC Edge. The rate for such facilities must maintain DS-1 to DS-3 crossover point at or below the number of DS-1's as of June 30, 2007 when setting the CRTC Terminating Transport Charges within a study area.[45]

(7) The CRTC Terminating Transport Charge Cap may not be set so that CRTC Terminating Transport Charge revenues from all terminating minutes will be greater than the Adjusted Access Revenue Shift Per Line times the number of Base Period lines for the applicable Tariff Year at the third step.

c. Responsible Carrier

The Responsible Carrier is the carrier that pays the CRTC Terminating Transport Charges to the CRTC and Uniform Termination Charge to the Terminating Carrier with respect to all traffic accepted by the Terminating Carrier for termination (as described above). In general, the Responsible Carrier will be the carrier that interconnects in that LATA (in a non-LATA state, local calling area) with the Terminating Carrier either directly or indirectly through a Tandem Transit Provider. A Tandem Transit Provider is not the Responsible Carrier, unless the Tandem Transit Provider expressly consents to be the Responsible Carrier. In addition, in the case of toll free (8YY) or other called party pays traffic, the called party pays service provider will be the Responsible Carrier

---

[43] Such rates are not applicable to special access services not used for interconnection.

[44] The switched access rates in effect on June 30, 2007 shall be used, provided that the ILEC has made no changes to those rates in the 90-day period leading up to June 30, 2007. If changes to any such rate have been made during that period, then the simple average of the rate in effect on each day during such 90-day period shall be used instead.

[45] The switched access rates in effect on June 30, 2007 shall be used, provided that the ILEC has made no changes to those rates in the 90-day period leading up to June 30, 2007. If changes to any such rate have been made during that period, then the simple average of the rate in effect on each day during such 90-day period shall be used instead.

whenever the called party pays service provider is the Terminating Carrier or delivers traffic (directly or through a Tandem Transit Provider) to the Terminating Carrier.

D. Transition of Interconnection Transport

Through June 30, 2007, rates for interconnection transport would continue to be determined under the applicable existing mechanism. Interconnection transport responsibilities, as described in Section II, above, will be flash cut at the start of Step 3 (July 1, 2007).

Insofar as the implementation of the Plan reduces a carrier's spend under a volume or revenue commitment made prior to an FCC order adopting this Plan, carriers must amend such commitments to restore the relationship between current volume/spend and the commitment level that existed prior to the implementation of the Plan, without any change to the prices that a carrier is paying for other circuits under that commitment. In no case can the change in financial responsibility result in a carrier paying a penalty or a higher price for other services under that commitment because their volume has been reduced by that change.

As of July 1, 2007, intrastate access rates for facilities used for interconnection transport rates will be moved to interstate dedicated switched transport rates, and ILECs will implement the discounts described in Section II.A.3.c. To the extent that these changes result in a change in ILEC switched access revenue, these amounts will be incorporated, for price cap carriers, into the calculation of the Adjusted Access Revenue Shift Per Line (as described in Section III.F.1.a., below), and, for rate-of-return carriers, into the Total Revenue Recovery Amount (as described in Section III.F.2.a., below). These amounts will be recovered from end users and, if necessary, the new support mechanisms established under this Plan.

E. Reductions in All Other Intercarrier Compensation Rates for All Interconnecting Carriers – Reciprocal Compensation, Wireless and Paging Intercarrier Compensation, Independent Company Settlements, and ISP-Bound Compensation

1. In General

a. Overview

These provisions would become effective at the start of Step 1 of the Plan, and last until the start of Step 4.

There will be a uniform rate during the transition for all ISP-bound traffic and non-access traffic[46] (including foreign exchange and virtual FX traffic provided on a non-access basis[47] ("FX traffic")), regardless of whether traffic is direct-trunk or tandem-routed. For application of the rates set forth below, the distinction between traffic greater than 3:1 and other traffic is eliminated.[48] The uniform rate applies to all traffic other than (i) exchange access other than FX traffic addressed below; (ii) CRTC-CMRS traffic governed by other provisions of the Plan; (iii) ILEC-ILEC traffic; and (iv) out-of-balance traffic as described below. Beginning July 1, 2007, the CRTC Terminating Transport Charge may be assessed, subject to Section III.C.3.b.

(1) In any state that has ordered bill-and-keep for the exchange of all ISP-bound and non-access traffic (not just ISP-bound or FX traffic), traffic would continue to be exchanged on a bill-and-keep basis.

(2) In a state that had ordered ISP-bound traffic to be bill-and-keep, but not other traffic, ISP-bound traffic would be compensable on a uniform basis with other traffic.

(3) In a state that had ordered ISP-bound, voice FX, or virtual FX traffic, but not all non-access traffic, to be exchanged as bill-and-keep, that traffic would be compensable as specified herein. (Access charges would not apply – see below.)

(4) In all other states, all ISP-bound and non-access traffic, including foreign exchange (including both ISP-bound FX and voice FX traffic) would be compensated at the rates set forth below.

CLEC-CLEC traffic exchanged under default bill-and-keep arrangements shall continue to be subject to such arrangements.

---

[46] Parties disagree as to whether ISP-bound and FX traffic is classified as access or non-access under today's rules. For clarity, and without prejudice to parties' positions, ISP-bound traffic has been separately identified herein.

[47] For purposes of this Plan, FX and virtual FX traffic does not include Feature Group A traffic that LECs provide under their exchange access tariffs. Feature Group A traffic will instead to be subject to access charges and the rate rebalancing provisions of the Plan. For purposes of this exception, ISP-bound traffic is not considered Feature Group A traffic.

[48] Plan signatories are free to argue that these changes are supported by Section 251(b)(5), Section 201, or both. As such, ISP-bound traffic will continue to be identified as traffic greater than 3:1, however, the rebuttable presumption is eliminated.

b. Effect on Interconnection Agreements

These default provisions do not supplant voluntarily agreed upon interconnection agreements and default arrangements that exchange traffic at bill-and-keep.

(1) An agreement governing the exchange of ISP-bound traffic subject to the new market restriction in accordance with the FCC's Order 01-131 (Order on Remand and Report and Order, CC Dockets No. 96-98, 99-68) shall not be considered a "voluntarily agreed upon interconnection agreement" under this section.

(2) The provisions of this section do not abrogate the intercarrier compensation provisions of voluntary interconnection agreements (*i.e.*, interconnection agreements that were not subject to arbitration of provisions related to intercarrier compensation or change of law with respect to intercarrier compensation) executed after July 1, 2004, where those agreements do not permit modification for change of law.

The intercarrier compensation provisions of all other agreements, including those that do not contain change of law provisions, are superseded to the extent inconsistent with this section.

c. Growth Caps and New Market Restrictions

All growth caps/new market restrictions on ISP-bound traffic are eliminated and are replaced by the uniform rates and Out-of-Balance Protection mechanism described below.

d. Payment of Tandem Rate; Treatment of FX Traffic

Section 51.711(a)(3) of the Commission's rules is amended to eliminate payment of tandem rate.

Where a state has ordered access charges to be paid for FX traffic, that treatment would be superseded by the rates and rate transition outlined herein.

e. Rate Transition

Rate transition (absent a voluntary agreement pursuant to Section III.E.1.b., above, for different rates):

(1) Rate effective on July 1, 2005 (Step 1) is $.0003525.

(2) Rate effective on July 1, 2006 (Step 2) is $.000293.

(3) Rate effective on July 1, 2007 (Step 3) is $.000234.

(4) Rate effective on July 1, 2008 (Step 4) is $.000175.

f. Growth in Out-of-Balance Traffic

ILECs interconnecting with CLECs would have an additional bilateral protection against undue growth in out-of-balance traffic exchanged with each CLEC referred to as the ILEC/CLEC Out-of-Balance Safeguard Mechanism. This protection mechanism would be applied on a state-by-state basis between an ILEC and each CLEC with which ISP-bound and non-access traffic is exchanged.[49]

(1) At the start of Step 1, the total quantity of all traffic MOU covered by this section sent from the ILEC to the CLEC and the total quantity of all traffic MOU covered by this section sent from the CLEC to the ILEC will be collected for a time period referred to as the Baseline Period. For purposes of this out-of-balance protection mechanism, the Baseline Period will be determined as follows:

(a) For carriers whose volume of traffic exchanged with the ILEC in 2004 was not affected by implementation of acquisitions or assignments, the Baseline Period for traffic measurement purposes will be the twelve months ended December 31, 2004.

(b) For carriers whose volume of traffic exchanged with the ILEC in 2004 was affected by implementation of acquisitions or assignments, the Baseline Period for traffic measurement purposes will be fourth quarter 2004 MOUs, times four (to annualize). A carrier that elects to invoke this "acquisition exception" must identify all other carriers affected the implementation of an acquisition or assignment to the ILEC, for the purposes of properly initializing Baseline Period MOUs. The Baseline Period for other affected carriers will also be determined using fourth quarter 2004 MOUs, times four (to annualize).

(2) If the Baseline Period MOU traffic sent from the ILEC to the CLEC exceeds the quantity of MOU traffic sent from the CLEC to the ILEC, then an out-of balance calculation is performed by subtracting the CLEC-to-ILEC MOUs from the ILEC-to-CLEC MOUs. This out-of-balance calculation will establish the Baseline Out-of-Balance MOU Threshold.

(3) ILECs and CLECs will track the MOU traffic to which this plan applies during each of the following periods: 1) January 1, 2005 – December 31,

---

[49] Where a CLEC operates multiple entities within a state that have executed separate contracts with the ILEC, the out-of-balance protection applies to each contract.

2005; 2) January 1, 2006 – December 31, 2006; 3) January 1, 2007 – December 31, 2007; and 4) the period from January 1, 2008 – June 30, 2008, inclusive.

(4) ILECs and CLECs will calculate and track out-of-balance MOUs exchanged during each period listed above. During each of these periods, ILEC payments for out-of-balance MOUs will be calculated using the following applicable methodology:

(a) **Method 1:** If ILEC-to-CLEC MOUs measured during the period exceed Baseline Period ILEC-to-CLEC MOUs, ILEC payments for out-of-balance MOUs are equal to the lower of: (a) out-of-balance MOUs during that year; or (b) the Baseline Out-of-Balance MOU Threshold. All out-of-balance MOUs that exceed the Baseline Out-of-Balance Threshold will not be compensable.

(b) **Method 2:** If ILEC-to-CLEC MOUs measured during the year do not exceed Baseline Period ILEC-to-CLEC MOUs, ILEC payments for out-of-balance MOUs are equal to actual out-of-balance MOUs calculated for the year.

(c) The following examples are provided to demonstrate how ILEC payments for out-of-balance MOUs are determined under Method 1 and Method 2.

Assuming: Baseline Period MOUs: ILEC→CLEC = 18B MOUs

CLEC→ILEC = 8B MOUs

Baseline Out-of-Balance MOU Threshold = 10B

<u>Example 1 January 2005 – December 2005</u>

ILEC→CLEC = 20B MOUs CLEC→ILEC = 8B MOUs

Out-of-Balance MOUs for the period = 12B

ILEC pays on 10B out-of-balance MOUs

2B out-of-balance MOUs = non-compensable

<u>Example 2 January 2006 – December 2006</u>

ILEC→CLEC = 20B MOUs CLEC→ILEC = 12B MOUs

Out-of-Balance MOUs for the period = 8B

ILEC pays on 8B out-of-balance MOUs

Example 3 January 2005 – December 2005

ILEC→CLEC = 16B MOUs CLEC→ILEC = 4B MOUs

Out-of-Balance MOUs for the period = 12B

ILEC pays on 12B out-of-balance MOUs because ILEC→CLEC MOUs for the period ≤ ILEC→CLEC MOUs for Baseline Period

Example 4 January 2006 – December 2006

ILEC→CLEC = 18B MOUs CLEC→ILEC = 6B MOUs

Out-of-Balance MOUs for the period = 12B

ILEC pays on 12B out-of-balance MOUs because ILEC→CLEC MOUs for the period ≤ ILEC→CLEC MOUs for Baseline Period

Example 5 January 2007 – December 2007

ILEC→CLEC = 20B MOUs CLEC→ILEC = 4B MOUs

Out-of-Balance MOUs for the period = 16B ILEC pays on 10B out-of-balance MOUs 6B out-of-balance MOUs = non-compensable because ILEC→CLEC MOUs for the period > ILEC→CLEC MOUs for Baseline Period

(5) An ILEC shall compensate a CLEC for all ISP-bound and non-access traffic unless and until the Baseline Out-of-Balance MOU Threshold is reached for the Plan year, *i.e.*, ILECs will not prorate compensation based on estimates of expected out-of-balance MOUs.

(6) If a carrier acquires another carrier, or acquires all or a portion of another carrier's assets, or is designated by another carrier to serve that carrier's customers, the ILEC will make appropriate adjustments to the acquiring/designee carrier's, *i.e.*, the acquiring carrier's, Baseline Out-of-Balance Threshold and the selling/designor carrier's, *i.e.*, the selling carrier's Baseline Out-of-Balance Threshold upon receipt of:

(a) An estimate of the seller's Baseline Period ILEC-to-CLEC and CLEC-to-ILEC MOUs that will transfer to the acquiring carrier; and

(b) An agreement between the acquiring carrier and selling carrier attesting to the Baseline Period MOUs to be transferred.[50]

(7) Interposition of another carrier or aggregator between the terminating carrier and the originating carrier will not result in a higher intercarrier compensation obligation on the originating carrier than would have applied if traffic had not been sent to that terminating carrier through a third carrier.

g. Prospective Effect

These changes would apply prospectively from the date these provisions take effect, and are made without prejudice to any party's claim with respect to retrospective obligations.

2. Traffic Exchanged Between Wireless and Wireline Networks

With respect to traffic exchanged between CMRS providers and ILECs, at the outset of the Plan, traffic subject to reciprocal compensation in the wireless-to-wireline direction will be all traffic that at the beginning of the call originates and terminates within the same MTA. Traffic in the wireline-to-wireless direction will be subject to reciprocal compensation charges by wireless carriers at a symmetrical rate (and would not generate toll charges to the landline end user or require additional dialed digits) so long as the traffic was destined for a wireless NXX rated in the ILEC rate center or a rate center covered by EAS arrangements. ILECs agree to exchange such traffic directly or indirectly (*i.e.* through a tandem owned by a third party but not through an IXC). IntraLATA toll traffic originated by a wireline carrier and terminated to a wireless carrier will also be subject to reciprocal compensation charges by the wireless carrier when such traffic, at the beginning of the call, originates and terminates within the same MTA, and the ILEC has the toll retail relationship with the wireline caller.

With respect to traffic that is exchanged between a CMRS provider and a CRTC that is subject to reciprocal compensation, as of July 1, 2005, the rate for such traffic will be the lower of the rate established in interconnection agreements or analogous arrangement for the exchange of traffic between the carriers involved, or $0.0125 per minute. Any agreement that did not expire prior to the filing of the Plan shall be honored or extended as necessary to accommodate the transition described below.[51] If no rate has been

---

[50] A rule should be written to require such information from the acquiring and selling carriers to facilitate its availability.

[51] For example, if an interconnection agreement specifies a reciprocal compensation rate at or below $0.0125 per minute, and that agreement expires, then that rate shall remain in effect until the default rate declines to a level below the rate the agreement specifies, at which time, the reciprocal compensation rate shall decline in accord with the default. If the interconnection agreement specifies a reciprocal compensation rate

otherwise established herein, then the rate on July 1, 2005 shall be $0.0125 per minute, which includes all necessary transport and switching.[52] The default rate, once established, will thereafter decrease as follows:

- Effective July 1, 2006, to $0.008392/minute.
- Effective July 1, 2007, to $0.004283/minute.
- Effective July 1, 2008, to the uniform termination rate specified in Section III.C.3.a.

In addition, beginning July 1, 2007, a CRTC may charge the CRTC Terminating Transport Charge pursuant to Section II.C.3.b.

3. All Other Non-Access Traffic

The default rates for the exchange of all other non-access traffic (including ILEC-ILEC) not governed by Section III.E.1. or III.E.2., above, will be reduced to no higher than following levels:

- Effective July 1, 2005, to 75 percent of the difference between rate in effect on June 30, 2005; and $0.000175, plus $0.000175.
- Effective July 1, 2006, to two-thirds of the difference between the rate in effect on June 30, 2006; and $0.000175, plus $.000175.
- Effective July 1, 2007, to 50 percent of the difference between the rate in effect on June 30, 2007; and $0.000175, plus $.000175.

---

above $0.0125 per minute, then that rate shall continue in effect until July 1, 2005, at which time the rate shall decline to $0.0125 per minute and proceed in accordance with the decline of the default rate.

[52] If there is no agreed-on rate (*i.e.*, no interconnection agreement, settlement agreement or other mutually agreed upon contractual obligation between the parties), and the RLEC has issued bills/invoices to the CMRS carrier but those invoices have been disputed based on rate levels or the lack of an ICA, the $0.0125 rate would be applied to those invoices and the CMRS carrier would compensate the RLEC at that rate level. The rate would be applied to the existing traffic in a reciprocal manner with an assumed balance of traffic factor of 70/30 (mobile to landline). If no bills have been rendered as of (a date certain), the parties will treat the traffic exchanged prior to that date as having been exchanged on a bill and keep basis and no compensation will be owed by either party.

- Effective July 1, 2007, to the uniform termination rate specified in Section III.C.3.a.

F. ILEC Revenue Recovery for Reductions in Switched Access Services Transitioning to Bill and Keep, Adjustment of Access Transit Rates to Parity, Access-Based Changes in ILEC Interconnection Transport, and, for Covered Rural Telephone Companies, Changes in Net InterILEC Settlements/Reciprocal Compensation

1. Price Cap LECs

For a price cap LEC, the following carrier compensation revenues will be replaced by recovery from its end user customers, if necessary, from additional universal service support, and, for CRTCs, from a continued CRTC Terminating Transport Charges: (i) revenues from access services being transitioned to "bill-and-keep" over the full course of the Plan; (ii) any access revenue reduction from transition of the transit rates to parity described in Section III.B; (iii) any change in access revenues from changes to interconnection transport described in Section III.D.; and, (iv) for CRTCs, net changes in revenues from interILEC settlements and reciprocal compensation. Changes to the recovery methodology are described below.

a. Adjusted Access Revenue Shift Per Line

The Adjusted Access Revenue Shift Per Line will be calculated by applying a transition factor to the Total Access Revenue Shift Per Line. The Total Access Revenue Shift Per Line will be a constant (subject to a one-time possible restatement by price cap CRTCs at the end of Step 2 of the transition, described above), determined in two steps (described assuming Step 1 is the Tariff Year beginning July 1, 2005, with the dates and Base Periods below advanced if Step 1 begins in another tariff year). In the first step, the Total Access Revenue Shift is determined by taking the amount of interstate and intrastate switched access revenue calculated by multiplying the June 30, 2005 rates for switched access services[53] (after reversing the effects of any allocation of Pooled Local Switching Revenue pooling under Section 61.48(m)(2)), by 2004 Base Period demand, including all demand under contract tariffs or Phase II pricing flexibility, any anticipated expense associated with the use or replacement of another carrier's facilities between the ILEC's End Office and the Access Tandem that, at the outset of the plan, are used in lieu of the ILEC's network transport, and, for a CRTC, Net Settlements/Reciprocal Compensation Revenue as defined below, and then removing the following anticipated revenue:

---

[53] The switched access rates in effect on June 30, 2005 shall be used, provided that the ILEC has made no changes to those rates in the 90-day period leading up to June 30, 2005. If changes to any such rate have been made during that period, then the simple average of the rate in effect on each day during such 90-day period shall be used instead.

- For non-CRTCs, revenue from interconnection transport and Tandem Transit Services (both based on Base Period 2004 switched interstate and intrastate access demand and, for Tandem Transit Services, at the lower of interstate or intrastate June 30, 2005 switched access rates, and, for interconnection transport rates, at the rates set forth Section II.A.3.c., above);

- For CRTCs, revenue from Interconnection Transport (not including the CRTC Terminating Transport Charges) and Tandem Transit Services (both based on Base Period 2004 switched interstate and intrastate access demand, for transit, at the lower of interstate or intrastate June 30, 2005 switched access rates, and, for interconnection transport rates, at the rates set forth Section II.A.3.c., above).

- For CRTCs, revenue from CRTC Terminating Transport Charges. This will be calculated based on Base Period 2004 terminating access demand, and maximum rates that are consistent with that CRTC's Terminating Transport Charge Cap and other limits on CRTC Terminating Transport Charges in Section III.C.3.b.

Second, that total revenue amount of Total Access Revenue Shift is divided by 2004 Base Period End User Line Demand (as defined below) to develop a revenue per line amount (Total Access Revenue Shift Per Line).

For purposes of these calculations:

(i) "Net Settlements/Reciprocal Compensation Revenue" is determined by taking the net amount of such settlements and reciprocal compensation revenue less settlement and reciprocal compensation expenses, based on 2004 Base Period Demand and rates, divided by Base Period 2004 Lines (assuming Step 1 is the Tariff Year starting July 1, 2005).

(ii) "2004 Base Period End User Line Demand" shall be determined using line equivalency for Centrex, ISDN, derived channel and new services, according to their standard application (*i.e.*, under today's rules, ISDN-PRI=5, Centrex=1) on the day prior to the start of Step 1, and including all demand under contract tariffs.

The Adjusted Access Revenue Shift Per Line in each year will be:

(i) In Step 1 (effective July 1, 2005) 25 percent of the Total Access Revenue Shift Per Line.

(ii) In Step 2 (effective July 1, 2006) 50 percent of the Total Access Revenue Shift Per Line.

(iii) In Step 3 (effective July 1, 2007) 75 percent of the Total Access Revenue Shift Per Line, except that if the switched access shift due to the flash-cut of transport (calculated as June 30, 2005 transport rates times Base Period

2004 transport demand) (the "Transport Access Shift") exceeds 25 percent of the Total Access Shift, then the percentage factor will be (50 percent + (Transport Access Shift divided by one fourth of the Total Access Shift* 25) percent). For example, if the Step 3 Transport Access Shift is $60 million, and the Total Access Shift is $200 million, then the Step 3 Factor used to calculate the Step 3 Adjusted Access Shift Per Line will be 50 percent + ($60M/$200M/4)*25 percent, or 80 percent.

(iv) In Step 4 (effective July 1, 2008) 100 percent of the Total Access Revenue Shift Per Line.

Low End Adjustment Mechanism for Price-Cap CRTCs:

A price cap CRTC, in a study area where it has not elected pricing flexibility, may apply for an increase in its Adjusted Access Revenue Shift Per Line for a given year if, at the end of a tariff period, its interstate switched access services rate of return for that period drops more than 100 basis points below the authorized level of 11.25 percent, *i.e.*, below 10.25 percent. A carrier seeking such relief must submit a cost study to the Commission demonstrating that one or more of its study areas earned less than 10.25 percent for a given year. Upon such demonstration, this CRTC would be entitled to adjust its Adjusted Access Revenue Shift Per Line for the following year to bring the prior year's earnings of the affected study area up to 10.25 percent. That adjustment would be reversed in subsequent years. If the study area is part of a multi-study area filing entity, and if that study area had access rate reductions, for that year, that were greater than 25 percent of the Total Access Shift for that study area, the LFAM calculation will be made as if that study area had reduced, in that year, access rates by only 25 percent.

The cost study's revenue calculation must include the maximum amount of SLC revenues permitted by this Plan, irrespective of whether the LEC increased its SLC rate to maximum levels or exercised pricing flexibility.

The accounting for these payments will provide that such payments will not increase the ILEC's interstate earnings for the period in which they are received. Any claim for an adjustment in a subsequent year would have to be supported by a new cost study (*i.e.*, each tariff period is treated independently).

b. Average Permitted Revenue Recovery Per Line and Maximum Line Recovery Permitted Revenue.

Average Permitted Revenue Recovery Per Line is the revenue per line amount used to derive the ILEC's Study Area Universal Service Support and the Price Cap End User Charge Revenue Limit. Average Permitted Revenue Recovery Per Line is determined as follows. The Average CMT Per Line (adjusted to remove amounts recovered in PICC and CCL as of June 30, 2005, and IAS support) will be added to the Adjusted Access

Revenue Shift Per Line. The following amounts will then be subtracted to yield the Average Permitted Revenue Per Line:

- For non-CRTC price cap LECs, during Steps 4 through 6 (July 1, 2008 through June 30, 2011), an amount calculated by dividing revenue from the Uniform Termination Charge for access minutes (calculated by multiplying Base Period 2004 terminating access minutes (including demand under contracts[54]) by $.000175 in Steps 4 and 5 and $.0000875 in Step 6) by Base Period 2004 lines.

- For CRTC price cap LECs, during Steps 4 through 6 (July 1, 2008 through June 30, 2011), an amount calculated by dividing revenue from the Uniform Termination Charge (calculated by multiplying base period terminating minutes for all traffic (including demand under contracts) in the prior calendar year by $.000175 in Steps 4 and 5 and $.0000875 in Step 6) by base period lines in the prior calendar year.

- In addition, beginning July 1, 2007, a CRTC will also subtract the CRTC Terminating Transport Charge times (Base Period 2006 total terminating demand (including demand under contracts) less Base Period 2004 terminating access demand (including demand under contracts or Phase II pricing flexibility)), divided by base period lines in the prior calendar year.

Maximum Line Recovery Permitted Revenue is an "as if" calculation used to derive the ILEC Study Area Universal Service Support, and will be determined as follows. Average Permitted Revenue Recovery Per Line will then be multiplied by the applicable Base Period end user demand, including under price caps and contracts, to yield Maximum Line Recovery Permitted Revenue (assuming a July 1, 2005 start date, this will be 2004 Base Period Demand for Step 1, 2005 for Step 2, 2006 for Step 3 and 2007 for Step 4).

In calculating Average Permitted Revenue Per Line and Maximum Line Recovery Permitted Revenue, the ILEC equivalency ratios for Centrex, ISDN, derived channels and new services will be the ratios in effect as of June 30, 2005.

c. Calculation of ILEC Recovery from the New Support Mechanisms Established under this Plan.

(1) ILEC Study Area Support Amount

This amount is calculated by taking the Maximum Line Recovery Permitted Revenue, as determined pursuant to Section III.F.1.b., above, and subtracting the amounts calculated pursuant to the three bullets below for each study area. These calculations pursuant to the

---

[54] If the Commission grants Phase II pricing flexibility for End Office switching, that terminating access demand would also be included throughout this subsection.

bullets below would be done on an as-if basis, assuming standard application of end-user charges (*i.e.*, equivalencies as of June 30, 2005, assuming Step 1 begins July 1, 2005). This approach would assure that each carrier's individual end user pricing decisions, including taking advantage of the flexibility described in Section III.J., below, would neither increase nor decrease a carrier's USF support from existing mechanisms or the new mechanisms established under this Plan.

Under the calculation described here, the Adjusted Access Revenue Shift not recovered through Uniform Termination Charges or, for CRTCs, CRTC Terminating Transport Charges will be recovered first from the SLC and then, if necessary as a result of the SLC caps, then from the new support mechanisms established under this Plan.

- For primary residential and single line business lines, the lower of Average Permitted Revenue Recovery Per Line, the Mass Market Per Line Cap on the SLC, as defined in Section III.G.1. or III.H.1., as applicable, or, in Steps 1 through 4, an amount equal to the PR/SLB SLC rate in effect on June 30, 2005 plus $0.75 in Step 1, $1.50 in Step 2, $2.50 in Step 3 (except as provided, below), and $3.50 in Step 4, times primary residential and single line business base period lines (including any line demand for Lifeline or under contracts[55]);

- For non-primary residential lines, the lower of Average Permitted Revenue Recovery Per Line, the Mass Market Per Line Cap on the SLC, as defined in Section III.G.2. or III.H.2., as applicable, or, in Steps 1 through 4, an amount equal to the non-primary residential SLC rate in effect on June 30, 2005 plus $0.75 in Step 1, $1.50 in Step 2, $2.50 in Step 3 (except as provided below), and $3.50 in Step 4, times non-primary residential base period lines (including any line demand under contracts);

- For multiline business lines, the greater of

  (i) The June 30, 2005 MLB SLC rate; or

  (ii) The lower of Average Permitted Revenue Recovery Per Line, the Enterprise Per Line Cap on the SLC, as defined in Section III.G.3. or III.H.3., as applicable, or, in Steps 1 through 4, an amount equal to the multiline business SLC rate in effect on June 30, 2005 plus $0.75 in Step 1, $1.50 in Step 2, $2.50 in Step 3 (except as provided below), and $3.50 in Step 4

  multiplied by multiline business base period lines (including any line demand under contracts).

---

[55] If the Commission grants Phase II pricing flexibility for end office switching, that terminating access demand would also be included throughout this subsection.

In each of the above calculations, if in Step 3, the switched access shift due to the flash-cut of transport results in the Step 3 Factor used to calculate Adjusted Access Revenue Shift Per Line (see Section III.F.1.a., above) exceeding 75 percent, then in lieu of the limit set by the June 30, 2005 SLC rate in a category plus $2.50, that limit will be the June 30, 2005 rate plus $1.50 + ((actual Step 3 Factor-50%)/25%. * $1.00). (For example, if the Step 3 Factor is 80 percent, the Step 3 change in the limit would be $1.20 (=$1.00 * (80%-50%)/25%), for a total limit of $2.70 above the June 30, 2005 SLC rate).

(2) Distribution of the ILEC Study Area Support Amount from the New Mechanisms Established Under this Plan

The ILEC Study Area Support Amount from the new support mechanisms established under this Plan will be distributed according to Section IV., below.

d. Calculation of Price Cap End User Charge Revenue Limit

The Price Cap End User Charge Revenue Limit will be established by adding the following amounts:

- For primary residential and single line business lines, the lower of Average Permitted Revenue Recovery Per Line, the Mass Market Per Line Cap on the SLC, as defined in Section III.G.1. or III.H.1., as applicable, or, in Steps 1 through 4, an amount equal to the PR/SLB SLC rate in effect on June 30, 2005 plus $0.75 in Step 1, $1.50 in Step 2, $2.50 in Step 3, and $3.50 in Step 4, times primary residential and single line business base period price cap lines (including any line demand for Lifeline, but not demand under contracts[56]);

- For non-primary residential lines, the lower of Average Permitted Revenue Recovery Per Line, the Mass Market Per Line Cap on the SLC, as defined in Section III.G.2. or III.H.2., as applicable, in Steps 1 through 4, or, in Steps 1 through 4, an amount equal to the non-primary residential SLC rate in effect on June 30, 2005 plus $0.75 in Step 1, $1.50 in Step 2, $2.50 in Step 3, and $3.50 in Step 4, times non-primary residential base period price cap lines (*i.e.*, not including demand under contracts);

- For multiline business lines, the greater of

  (i) The June 30, 2005 MLB SLC rate; or

[56] If the Commission grants Phase II pricing flexibility for end office switching, that terminating access demand would also be excluded throughout this subsection.

(ii) The lower of Average Permitted Revenue Recovery Per Line, the Enterprise Per Line Cap on the SLC, as defined in Section III.G.3. or III.H.3., as applicable, or, in Steps 1 through 4, an amount equal to the multiline business SLC rate in effect on June 30, 2005 plus $0.75 in Step 1, $1.50 in Step 2, $2.50 in Step 3, and $3.50 in Step 4,

times multiline business base period price cap lines (*i.e.*, not including any demand under contracts).[57]

In each of the above calculations, if in Step 3, the switched access shift due to the flash-cut of transport results in the Step 3 Factor used to calculate Adjusted Access Shift Per Line (see Section I*.E.*1.3).c, above) exceeding 75 percent, then in lieu of the limit set by the June 30, 2005 SLC rate in a category plus $2.50, that limit will be the June 30, 2005 rate plus $1.50 + ((actual Step 3 Factor-50%)/25%. * $1.00). (For example, if the Step 3 Factor is 80 percent, the Step 3 change in the limit would be $1.20 (=$1.00 * (80%-50%)/25%), for a total limit of $2.70 above the June 30, 2005 SLC rate).

If an ILEC receives pricing flexibility relief for end user charges after the start of Step 1 and prior to July 1, 2008, the carrier must recalculate the Price Cap End User Charge Revenue Limit to reflect the removal of the revenue associated with the services receiving relief, in the same manner as under existing rules.

2. Rate-of-Return LECs

a. Revenue Recovery

For a Rate-of-Return LEC, rate-of-return principles using historical (*i.e.*, embedded) costs will continue to be used to determine the amount of interstate revenue recovery, and changes in the interstate switched traffic sensitive ratebase will be used as a proxy for change in intrastate costs recovered today through intrastate access charges. CRTCs will also recover the net settlements and reciprocal compensation that they receive as of June 30, 2005.

To offset the changes in access and reciprocal compensation rates under this plan, a rate-of-return LEC will recover:

- Reductions in interstate access revenues due to the changes in interstate access rates under this plan, as compared with an interstate switched access (traffic sensitive) revenue requirement calculated using an 11.25 percent rate-of-return.

---

[57] A Price Cap LEC will not be required to increase its MLB/Enterprise SLC "as if" revenue per line above its June 30, 2005 study area average SLC levels until the maximum rates that can be charged for Primary Residential/SLB/Mass Market SLCs under all applicable limits herein exceeds the June 30, 2005 MLB SLC rate.

- Reductions in intrastate access revenues from their June 30, 2005 levels, adjusted after Year 1 in proportion to changes in the interstate switched traffic sensitive revenue requirement. Thus, as a proxy for changes in intrastate revenue requirements, the aggregate amount of intrastate access revenues as of June 30, 2005 will increase or decrease as the interstate switched traffic sensitive revenue requirement for the study area increases or decreases.

- For CRTCs, reductions in net settlements[58]/reciprocal compensation revenues, not included in access reductions, received from their June 30, 2005 levels (which is not less than $0).

To calculate the amount of additional revenue to be recovered through the changes to the SLC and the new support mechanisms proposed under this Plan, a Total Revenue Recovery Amount will be calculated by determining the Study Area Revenue Requirements and subtracting certain revenue sources. Study Area Revenue Requirements will be determined by adding together the following:

- The interstate switched traffic sensitive revenue requirement, calculated using an 11.25 percent rate-of-return;

- The intrastate switched access revenues as of June 30, 2005 (calculated at the weighted daily average rates in effect for the 90 days prior to June 30, 2005 and 2004 demand), adjusted, after Step 1, in proportion to the change in the interstate switched traffic sensitive revenue requirement from the previous year (*i.e.*, for Step 2, the change from Year 1 to Year 2)("the Interstate Revenue Requirement Adjustment Factor");

- For CRTCs, the amount of net settlements/reciprocal compensation revenue as of June 30, 2005 (calculated at the weighted daily average rates in effect for the 90 days prior to June 30, 2005 and 2004 demand), to the extent not included in the interstate and intrastate access rates and revenues; and

- The interstate common line revenue requirement.

To determine the Total Revenue Recovery Amount, the following will be subtracted from the Study Area Revenue Requirements:

- From July 1, 2005 to June 30, 2008 (Steps 1-3), interstate switched traffic sensitive access revenues (including any voluntary reductions) to be received during that tariff year;

---

[58] These settlements are intercarrier compensation payments between incumbent LECs.

- From July 1, 2005 to June 30, 2008 (Steps 1-3), intrastate switched traffic sensitive access revenues (including any voluntary reductions) to be received during that tariff year;

- From July 1, 2005 to June 30, 2008 (Steps 1-3), for CRTCs, net settlements/reciprocal compensation revenue to be received during that tariff year (but not less than $0), not otherwise included;

- Beginning July 1, 2007 (coincident with transport "flip"), all revenues from interconnection transport and Tandem Transit Service not otherwise included;

- Beginning July 1, 2007, for CRTCs, all revenues from CRTC Terminating Transport Charges. For the purposes of this calculation, CRTC Terminating Transport revenues shall be calculated as the maximum that could be generated from the CRTC Terminating Transport Charge consistent with the CRTC's Terminating Transport Charge Cap, using all demand potentially subject to the such charges (regardless of whether such charges are actually assessed, *i.e.* including voluntary reductions);

- From July 1, 2008 to June 30, 2011 (Steps 4-6), for CRTCs, revenues from the Uniform Termination Charges. For non-CRTCs, from July 1, 2008 to June 30, 2011 (Steps 4-6), revenues from Uniform Termination Charges as applied to Base Year 2007 terminating access minutes;

- Revenues from charges for line port costs in excess of basic analog service and special access surcharges;

- ICLS support; and

- LSS support.

The ILEC Study Area Support Amount for a rate-of-return study area will be calculated by taking the Total Revenue Recovery Amount, less the Maximum Permitted Total End User Revenue, determined according to subsection III.F.b., below, including any voluntary reductions. The effect of these rules is to recover the shifted access revenues first from CRTC Terminating Transport Charges (beginning July 1, 2007), then from the SLCs, and then from the new support mechanisms established by this plan.

At the end of a given year, the amount of support received will be subject to a true-up. To accomplish this true-up, Total Revenues Recovered will be calculated by adding together:

- SLC revenues;

- SLC voluntary reductions;

- TNRM/ICRM support distributed during the year under this Plan;
- From July 1, 2005 to June 30, 2008 (Steps 1-3), interstate switched traffic sensitive access revenues (including any voluntary reductions) to be received during that tariff year;
- From July 1, 2005 to June 30, 2008 (Steps 1-3), intrastate switched traffic sensitive access revenues (including any voluntary reductions) to be received during that tariff year;
- From July 1, 2005 to June 30, 2008 (Steps 1-3), for CRTCs, net settlements/reciprocal compensation revenue to be received during that tariff year (but not less than $0), not otherwise included;
- Beginning July 1, 2007 (coincident with transport "flip"), all revenues from interconnection transport and transit not otherwise included;
- Beginning July 1, 2007, for CRTCs, all revenues from CRTC Terminating Transport Charges. For the purposes of this calculation, CRTC Terminating Transport revenues shall be calculated as the maximum that could be generated from the terminating transport charge consistent with the CRTC's Terminating Transport Charge Cap using all demand potentially subject to the such charges (regardless of whether such charges are actually assessed, *i.e.* including voluntary reductions);
- From July 1, 2008 to June 30, 2011 (Steps 4-6), for CRTCs, revenues from the Uniform Termination Charge. For non-CRTCs, from July 1, 2008 to June 30, 2011 (Steps 4-6), revenues from Uniform Termination Charge as applied to Base Year 2007 terminating access minutes;
- Revenues from charges for line port costs in excess of basic analog service and special access surcharges;
- ICLS support; and
- LSS support.

A true-up will then be made by comparing the Total Revenue Recovery Amount with the Total Revenues Recovered, adjusting Total Revenue Recovery Amount to reflect actual interstate switched traffic sensitive revenue requirement for the year (which also adjusts the revenue requirement associated with June 30, 2005 intrastate switched access charges).

Support under this Plan's mechanisms (*i.e.*, ICRM and TNRM) will be increased or decreased to eliminate the difference between the adjusted Total Revenue Recovery Amount and Total Revenues Recovered.

The following shall be treated as non-regulated investment, expenses and revenues for the purposes of determining the interstate switched access revenue requirement and the ICRM/TNRM calculation for rate-of-return carriers: (1) All investment in, expenses incurred with respect to, and revenues generated from tandems and associated transport installed or constructed after July 1, 2005 outside of the rate-of-return incumbent LEC's contiguous service area (in a non-LATA state, local calling area); and (2) all investment in facilities to the extent (but solely to the extent) they are used to provide service to an end user outside the ILEC's study area, and any expenses incurred and revenue generated with respect to such service. Investment in, expenses incurred with respect to, and revenues generated from transport and tandems within a rate-of-return incumbent LEC's contiguous service area (in a non-LATA state, local calling area), will continue to be treated as regulated.

Each rate-of-return LEC, or its agent on behalf of the rate-of-return ILEC, shall file with the Administrator cost support justifying its determination of its interstate switched access revenue requirement, interstate common line revenue requirement, intrastate access revenues as of June 30, 2005, and net settlements/reciprocal compensation revenue as of June 30, 2005. In addition, each rate-of-return LEC, or its agent on behalf of the rate-of-return ILEC, shall file with the Administrator all data necessary for the Administrator to compute the ILEC Study Area Support Amount. The Administrator shall make this information publicly available in the same manner as if the rate-of-return LEC had filed a tariff pursuant to Part 61, subject, when appropriate, to the Commission's rules governing confidential treatment.

With respect to its interstate revenue requirement, an average schedule incumbent LEC, or its agent, need only provide the Administrator with the data necessary to verify the computation of its interstate common line and interstate switched traffic sensitive revenue requirements pursuant to the average schedule formulas approved by the Commission. Nothing in the Plan alters the Commission's rules for determining an ILEC's interstate revenue requirements under the average schedule.

Any party seeking to challenge particular carrier's determination of its interstate switched access revenue requirement, interstate common line revenue requirement, intrastate access revenues as of June 30, 2005 (Step 1 only), and net settlements/reciprocal compensation revenue as of June 30, 2005 (Step 1 only) may do so within 45 days of the date the Administrator makes such justifications publicly available. In the event the Commission determines that the rate-of-return LEC's statement of its interstate switched access revenue requirement, its interstate common line revenue requirement, intrastate access revenues as of June 30, 2005 (Step 1 only), or net settlements/reciprocal compensation revenue as of June 30, 2005 (Step 1 only) is not just and reasonable, the TNRM support shall be recalculated as of the start of the period for which the justification was initially filed.

Nothing herein precludes a company that participates in the average schedule from continuing to do so, or electing to do so in the future.

b. End User Revenue Recovery

Maximum Permitted Total End User Revenue will be determined by multiplying the Maximum Permitted Averaged End User Charge for each customer class in the study area by the projected line demand for that tariff year. The actual SLC rates may be geographically deaveraged by zone according to the existing Section 69.104(r) of the Commission's rules, 47 C.F.R. § 69.104(r), but otherwise may not exceed the Maximum Permitted Averaged End User Charge.

The Maximum Permitted Averaged End User Charge for each customer class will be determined as follows:

(i) For Residential/Single Line Business lines, the lesser of: (i) Total Revenue Recovery Amount Per Line; (ii) for non-CRTCs, the maximum level consistent with the Average End User Rate Increase Limit; or (iv) the Nationwide PR/SLB SLC Cap or Mass Market Cap, as applicable.

(ii) For Multiline Business lines, the greater of:

a. The multiline business SLC rate in effect on June 30, 2005; or

b. The lesser of: (i) Total Revenue Recovery Amount Per Line; (ii) for non-CRTCs, the maximum level consistent with the Effective SLC Increase Limit; (iii) for non-CRTCs, the maximum level consistent with the Average End User Rate Increase Limit; or (iv) the Nationwide Multiline Business SLC Cap or Enterprise Cap, as applicable.

Total Revenue Recovery Amount Per Line is calculated by dividing the Total Revenue Recovery Amount by total projected line demand for all customer classes, using equivalencies as specified in the Commission's rules.

c. Adjustment for Impact on Special Access Revenues

For rate-of-return CRTCs, the ICF Plan provides for a "Mid-Course Correction" applicable to special access, as set forth below.

A Mid-Course Adjustment to the Total Revenue Recovery Amount would be made if the rate-of-return CRTC demonstrates that:

(1) Actual demand for special access offerings is significantly less after the Plan takes effect; and

(2) The ILEC has not been able to find alternative uses for its special access facilities (but the ILEC need not show an inability to find alternative uses if the facilities were reused as a result of the ICF Plan itself, such as to accommodate the increased switched access demand – in that case, the

loss of revenues from those special access facilities could be included in the proposed Mid-Course Adjustment); and

(3) The decline in demand for special access was not due to losses to competitors.

This Mid-Course Correction would permit carriers to recoup under-recovered access revenues from the Effective Date of the Plan through the date of the filing.

The Commission shall give public notice of the request and seek comment on it. Any carrier may intervene in this proceeding and present its position on the request.

G. SLC Cap Transition and Increase Limits for Non-CRTCs

The nationwide cap on non-CRTC SLCs will increase as follows, and will be subject to annual increase limits as set forth below.

1. Nationwide PR/SLB SLC Cap Transition

For price cap carriers, effective July 1, 2005, Primary Residential and Single Line Business Line Nationwide SLC Cap and the Non-Primary Residential Line Nationwide SLC Cap would be merged to create the Mass Market Per Line Cap and would change according to the schedule set forth below. For non-price cap carriers, the Residential and Single Line Business Line Nationwide SLC Cap would change according to that same schedule.

(a) In Step 1 (effective July 1, 2005) the primary residential and single line business Per Line Cap for non-price cap carriers or, for price cap carriers, the Mass Market Per Line Cap will increase from $6.50 to $7.25.

(b) In Step 2 (effective July 1, 2006) the primary residential and single line business Per Line Cap for non-price cap carriers or, for price cap carriers, the Mass Market Per Line cap will increase from $7.25 to $8.00.

(c) In Step 3 (effective July 1, 2007) the primary residential and single line business Per Line Cap for non-price cap carriers or, for price cap carriers, the Mass Market Per Line cap will increase from $8.00 to $9.00.

If in Step 3, the switched access shift due to the flash-cut of transport results in the Step 3 Factor used to calculate Adjusted Access Shift Per Line (see Section III.F.1.a., above) exceeding 75 percent, then the Step 3 Nationwide Cap will be $8.00 + ((actual Step 3 Factor-50%)/25% * $1.00). For example, if the Step 3 Factor is 80 percent, the $1.00 cap increase in Step 3 would be factored up to $1.20 (=$1.00 * (80%-50%)/25%), for a total cap of $9.20.

d) In Step 4 (effective July 1, 2008) the primary residential and single line business Per Line Cap for non-price cap carriers or, for price cap carriers, the Mass Market Per Line cap will increase to $10.00.

e) On July 1, 2009 and annually thereafter, the $10.00 cap shall be adjusted at the rate of inflation, as measured by the annual change in GDP-CPI.

2. Nationwide Non-Primary Residential SLC Cap

For price cap carriers, effective July 1, 2005, this cap would be merged with the Mass Market Per Line Cap and increase pursuant to Section III.G.1., above.

3. Nationwide Multiline Business SLC Cap

For price cap carriers, this nationwide cap would be renamed the Enterprise Per Line Cap and apply to the Enterprise Service Category as discussed in Section III.J. of this Plan. The multi-line business (MLB) Per Line Cap for non-price cap carriers or, for price cap carriers, the Enterprise Per Line Cap will remain at its June 30, 2005 level (*i.e.*, $9.20) until the start of Step 4 (July 1, 2008), at which time the MLB cap for non-price cap carriers or, for price cap carriers, the Enterprise Per Line Cap will be the same as the cap for the residential and single-line business SLC for non-price cap carriers or, for price cap carriers, the Mass Market Per Line Cap.

4. Average End User Rate Increase Limit

In addition, within a study area, the change per line in all SLC rates within a service category (*i.e.*, Mass Market or Enterprise) under price caps from their June 30, 2005 levels (*i.e.*, applicable Step 1-4 rate minus June 30, 2005 rate in each customer class), averaged across all lines under price caps and customer classes within that service category, may not exceed: in Step 1, $0.75; in Step 2, $1.50, 2005 average level for SLCs under price caps; in Step 3, $2.50, except as below; and in Step 4, $3.50. This limit on the amount that SLCs may, on average in each service category, increase is the Average End User Rate Increase Limit.

For rate-of-return non-CRTCs, the change per line in all SLC rates within respectively, Residential/Single Line Business and Multiline Business Lines, from their June 30, 2005 levels (*i.e.*, applicable Step 1-4 rate minus June 30, 2005 rate in each customer class), averaged across all lines and customer classes within that customer class group (Residential/Single Line Business or Multiline Business), may not exceed: in Step 1, $0.75; in Step 2, $1.50; in Step 3, $2.50, except as below; and in Step 4, $3.50.

If in Step 3, the switched access shift due to the flash-cut of transport results in the Step 3 Factor used to calculate Adjusted Access Shift Per Line (see Section III.F.1.a, above) exceeding 75 percent, then the Step 3 Average End User Rate Increase Limit will be $1.50 + ((actual Step 3 Factor-50%)/25%. * $1.00). (For example, if the Step 3 Factor is 80 percent, the $1.00 change in the Step 3 Average End User Rate Increase Limit would

be factored up to $1.20 (=$1.00 * (80%-50%)/25%), for a total increase limit of $2.70). After Step 4, the only limit is the $10.00 Nationwide Cap.

5. Effective End User Rate Increase Limit (for a specific study area or zone)

In any location where the current end user rate is below the current residential and single-line business ($6.50) cap, the rate under price caps for any end user in that location may be no more than: in Step 1, $0.95 above the SLC rate as of June 30, 2005; in Step 2, no more than $1.90 above the SLC rate as of June 30, 2005; in Step 3, no more than $3.10 above the SLC rate as of June 30, 2005; and, in Step 4, no more than $4.30 above the SLC rate as of June 30, 2005. If in Step 3, the switched access shift due to the flash-cut of transport results in the Step 3 Factor used to calculate Adjusted Access Shift Per Line (see Section III.F.1.a., above) exceeding 75 percent, then the Step 3 Increase Limit will be $1.90 + ((actual Step 3 Factor-50%)/25%. * $1.20). (For example, if the Step 3 Factor is 80 percent, the $1.20 change in the Step 3 increase limit would be factored up to $1.44 (=$1.25 * (80%-50%)/25%), for a total increase limit of $3.44 above the rate in effect as of June 30, 2005). After Step 4, the only limit is the $10.00 Nationwide Cap.

H. SLC Cap Transition for CRTCs

The nationwide caps on CRTC SLCs will increase as follows, and will be subject to annual increase limits as set forth below.

1. Nationwide PR/SLB SLC Cap Transition

For price cap carriers, effective July 1, 2005, Primary Residential and Single Line Business Line Nationwide SLC Cap and the Non-Primary Residential Line Nationwide SLC Cap would be merged to create the Mass Market Per Line Cap and would change according to the schedule set forth below. For non-price cap carriers, the Residential and Single Line Business Line Nationwide SLC Cap would change according to that same schedule.

(a) In Step 1 (effective July 1, 2005), for non-price cap carriers, the residential and single line business Per Line Cap and, for price cap carriers, the Mass Market Per Line Cap, will increase from $6.50 to $7.00.

(b) In Step 2 (effective July 1, 2006), for non-price cap carriers, the residential and single line business Per Line Cap and, for price cap carriers, the Mass Market Per Line cap will increase from $7.00 to $7.50.

(c) In Step 3 (effective July 1, 2007), for non-price cap carriers, the residential and single line business Per Line Cap and, for price cap carriers, the Mass Market Per Line cap will increase from $7.50 to $8.00.

(d) In Step 4 (effective July 1, 2008), for non-price cap carriers, the residential and single line business Per Line Cap and, for price cap carriers, the Mass Market Per Line cap will increase to $8.50.

(e) In Step 5 (effective July 1, 2009), for non-price cap carriers, the residential and single line business Per Line Cap and, for price cap carriers, the Mass Market Per Line cap will increase to $9.00.

(f) In Step 6 (effective July 1, 2010), the CRTC shall have the option to increase, for non-price cap carriers, the residential and single line business Per Line Cap or, for price cap carriers, the Mass Market Per Line cap, to $9.50.

(g) In Step 7 (effective July 1, 2011), the CRTC shall have the option to increase, for non-price cap carriers, the residential and single line business Per Line Cap or, for price cap carriers, the Mass Market Per Line cap, to $10.00.

2. Nationwide Non-Primary Residential SLC Cap

For price cap carriers, effective July 1, 2005, this cap would be merged with the Mass Market Per Line Cap and increase pursuant to Section III.H.1., above.

3. Nationwide Multiline Business SLC Cap

For price cap carriers, this nationwide cap would be renamed the Enterprise Per Line Cap and apply to the Enterprise Service Category as discussed in Section H of this Plan. The multi-line business (MLB) Per Line Cap for non-price cap carriers or, for price cap carriers, the Enterprise Per Line Cap will remain at its June 30, 2005 level (*i.e.*, $9.20) until the start of Step 4 (July 1, 2008). Beginning in Step 4 (effective July 1, 2008), the MLB cap for non-price cap carriers or, for price cap carriers, the Enterprise Per Line Cap will be $10.00.

J. Price Cap LEC SLC Pricing Rules

1. General Pricing Rules for End User Charges – Effective July 1, 2005

(a) Subject to the Price Cap End User Charge Revenue Limit and the applicable caps and limits on SLCs in Sections III.G. and III.H., above, and the general nondiscrimination requirements of sections 201 and 202 of the Act, and any other applicable provisions of federal law, an ILEC has flexibility to set end user charge levels in its generally available tariffs at its discretion, as described and limited further below. An ILEC may exercise pricing flexibility in accordance with the terms of the Plan as set forth herein.

(b) SLC revenues subject to price caps cannot exceed the Price Cap End User Charge Revenue Limit. The End User Charge Revenue Limit for SLC revenues subject to price caps will be calculated in each annual access filing in accordance with the formulas set forth in this Plan.

(c) A Mass Market Category and an Enterprise Service Category would be established as follows:

(i) Primary residential, non-primary residential, and single-line business SLCs would be assigned to the Mass Market Service Category.

(ii) Multi-line business SLCs would be assigned to the Enterprise Service Category.

(iii) To initialize the End User Charge Revenue Limit for the Enterprise Service Category, the applicable base period demand for the multiline business SLCs under price caps would be multiplied by the greater of:

- The June 30, 2005 multiline business SLC rate; or
- The lower of Average Permitted Revenue Recovery Per Line, the Enterprise Per Line Cap on the SLC, as defined in Section III.G.3. or III.H.3., as applicable, the highest rate consistent with the Average End User Rate Increase Limit, or the Effective End User Rate Increase Limit.

(iv) The End User Charge Revenue Limit for the Mass Market Service Category is then determined by adding together the following:

- For primary residential and single line business lines, the lower of Average Permitted Revenue Recovery Per Line, the Mass Market Per Line Cap on the SLC, as defined in Section III.G.1. or III.H.1., as applicable, or, in Steps 1 through 4, an amount equal to the PR/SLB SLC rate in effect on June 30, 2005 plus $0.75 in Step 1, $1.50 in Step 2, $2.50 in Step 3, and $3.50 in Step 4, times primary residential and single line business base period price cap lines (including any line demand for Lifeline, but not demand under contracts[59]);

[59] If the Commission grants Phase II pricing flexibility for end office switching, that terminating access demand would also be excluded throughout this subsection.

- For non-primary residential lines, the lower of Average Permitted Revenue Recovery Per Line, the Mass Market Per Line Cap on the SLC, as defined in Section III.G.2. or III.H.2., as applicable, in Steps 1 through 4, or, in Steps 1 through 4, an amount equal to the non-primary residential SLC rate in effect on June 30, 2005 plus $0.75 in Step 1, $1.50 in Step 2, $2.50 in Step 3, and $3.50 in Step 4, times non-primary residential base period price cap lines (*i.e.*, not including demand under contracts);

(v) The same line demands and equivalency ratios must be used to calculate the Price Cap End User Charge Revenue Limit, the End User Charge Revenue Limit for the Enterprise Service Category and the End User Charge Revenue Limit for the Mass Market Service Category, and the equivalency ratios used to calculate these Limits in the annual filing must be the same as those used to assess end user rates pursuant to the annual filing.

(d) Price reductions in one service category shall not be offset by price increases in the other service category.

(e) Price reductions within a service category may be offset by price increases to other services within the same service category, subject to the Per Line Cap and the Price Cap and service category End User Charge Revenue Limits.

(f) An ILEC will not be bound by current rules for the application of end user charges contained in either service category. The ILEC may exercise discretion in the application of such end user charges. For example, an ILEC may retain existing customer classes, such as Primary and Non-primary in the Mass Market Service Category and Multi-line Business within the Enterprise Service Category or it may eliminate all of the existing customer classes and establish new customer classes or could establish some combination of existing and new customer classes. Different end user charges could apply to each customer class.

(g) An ILEC may, if it chooses to do so, geographically deaverage its end-user recovery. The pricing zones used for deaveraging end-user recovery for ILECs subject to price caps may only be established as follows:

- The existing zones for UNE loops; or

- The ILEC may adopt a different set of zones in each state. If it chooses this approach, the zones would be subject to a maximum number of four, and a minimum percentage of 15 percent of end user lines in each zone.

- There is no formula for the determination of SLC rates by zone. The ILEC may establish any set of zone rates that meets the revenue limit, the per-line cap and increase limits, and the other requirements set forth herein.

- End user charges for different customer classes may vary by pricing zone.

(h) ILECs would be free to apply different SLC prices based on customer purchase choice:

- Volume purchase, where volume may include revenues or the purchase of other services, *e.g.*, additional lines, vertical services, a service package, provided by the ILEC or in combination with the ILEC and its affiliates. A service package or bundle is a group of services that is marketed at a single price point and may or may not include long distance service. When an ILEC customer chooses to purchase long distance service as a standalone service, *i.e.*, not in a service package, the ILEC cannot include this long distance purchase for the purpose of applying a different SLC.

- Term commitment.

- Growth commitment, where growth reflects an increase in volume as volume is defined above.

j) End user charges and price changes may differ by customer segment, which is a homogeneous group of customers that share one or more of the following dimensions:

- Customer class.

- Pricing Zone.

- Customer purchase choice including but not limited to volume purchase, term commitment, growth commitment, or service package.

k) ILECs would be allowed to offer contract tariffs. End user charge revenues generated by a contract tariffs would not be subject to price caps, nor would demand be included in calculating the Mass Market and Enterprise Service Category End User Charge Revenue Limits. Neither the Service Category nor Price Cap End User Charge Revenue Limit would apply to contract tariffs.

- If an ILEC receives pricing flexibility relief to remove end user charges from price caps after the start of Step 1, but prior to July 1, 2008, the carrier must recalculate the Price Cap End User Charge Revenue Limit and service category revenue limits to reflect the removal of the revenue associated with the services receiving relief, in the same manner as under existing rules.

- Grant of pricing flexibility for an ILEC's end user charges in a given area would not affect the calculation of support from new mechanisms established under this Plan for that area, since the new support would be based on an "as-if" calculation, and would not be related to the actual end user pricing adopted by the ILEC.

(l) ILECs may offer promotions. However, the revenue effect of the promotion cannot be used to create headroom to raise end user charges within the service category on a short-term basis.

(m) For bundled service packages, the ILEC may add an amount to the current end user line item, create a new stand-alone line item, roll the SLC or a portion of the SLC into the price of bundled services, or some combination of these. If the SLC or some portion of the SLC is rolled into a package price, that component of the bundled service package rate would be tracked separately to allow federal recovery to be identified, and to allow application of the Price Cap and service category End User Charge Revenue Limits and the applicable Caps and Limits. This provision does not modify any applicable accounting safeguards. For this purpose, the amount of the SLC charge tracked for a bundled service customer would be the SLC that applies to this customer segment.

(n) For customers that do not purchase a bundled service package, the ILEC may add an amount to the current end user line item, or create a new stand-alone line item, or some combination. When an ILEC customer purchases long distance service as a standalone service, *i.e.*, not in a service package, the same end user charge will apply regardless of whether the customer chooses to purchase long distance service from the ILEC's affiliate or not.

(o) End user charges are not applied today on services provided over dedicated, non-switched arrangements, such as special access (including DSL). This approach would be maintained under this plan.

(p) Parts 61 and 69, as well as any other applicable provisions of the Commission's rules, will be conformed to the language in this Plan.

2. General Pricing Rules for End User Charges – Effective July 1, 2008

The following additional pricing flexibility would become available July 1, 2008:

(a) End user charge revenues would be removed from price caps. The End User Charge Revenue Limit would not apply.

(b) The per-line caps on the SLC otherwise established under this Plan would not apply to end user charges offered under contract tariffs.

(c) There would be no constraints on the manner in which pricing zones could be established.

(d) Tariff filings for price changes could be made on one day's notice.

(e) Except for the Caps set forth in Section III.G. and III.H, above, or to the extent otherwise provided in this Plan, those portions of Parts 61 and 69 of the Commission's rules that address price cap carrier end user charges would no longer apply.

3. Pricing Flexibility Procedural Changes

New service offerings would receive pricing flexibility by demonstrating in the tariff filing that this service is comparable to services that have already received similar pricing flexibility.

4. Additional Regulatory Relief

An ILEC is free to seek additional regulatory relief at any time. For example, an ILEC may request a rule change or waiver for additional pricing flexibility sooner than contemplated by the following provisions of the Plan because it is able to demonstrate that its service territory is sufficiently competitive to warrant such additional relief.

IV. New Support Mechanisms

This Plan establishes two new support mechanisms to provide ILECs with the support described in Sections III.F.1.c. and III.F.2.a., above, and to certain CETCs serving those ILEC study areas, as described further below.

A. Intercarrier Compensation Recovery Mechanism ("ICRM")

1. General Rules

a. Eligibility

The ICRM will provide support to ILECs other than Covered Rural Telephone Companies, as well as CETCs competing with such carriers.

An ETC must certify that it uses the support it receives from the ICRM under this plan only for the provision, maintenance, and upgrading of facilities and services for which the support is intended in the service area where the need for that support originated.

b. Distribution of Support

(1) Default Rule

Unless the ILEC files a "Zone Disaggregation Plan" or a "Residential Targeting Plan," as described herein, all ICRM support will be distributed to achieve a uniform, per-eligible-line amount across all customer classes.

(2) Zone Disaggregation Plans

The ILEC will have the option of filing a "Zone Disaggregation Plan" for its ICRM support that will distribute support by geographic zone. Support must be distributed according to SLC pricing zones or, if a carrier has not created SLC pricing zones, according to UNE pricing zones or, if a carrier does not have UNE pricing zones, then according to disaggregation zones established according to the same rules governing the creation of SLC pricing zones in Section III.J.1.(g) of this Plan. In addition, support in a lower-cost zone per eligible line cannot exceed support per eligible line in a higher-cost zone for the same customer class.

To become effective, a Zone Disaggregation Plans must:

- Be filed with the FCC;
- Describe the rationale used in developing the plan, including the methods and data relied upon in disaggregating ICRM support, in sufficient detail for interested parties to make a meaningful analysis of how the ILEC derived its plan;

- If the plan uses a benchmark, provide detailed information explaining what the benchmark is and how it was determined;
- State the per-eligible-line ICRM support amount available in each zone;
- Include maps precisely identifying the boundaries of the disaggregation zones; and
- Certify compliance with the following requirements:

    1. That the plan will not increase or decrease the total amount of ICRM support the ILEC would receive within a study area, as compared to what it would receive in the absence of a disaggregation plan, holding demand constant;
    2. That the plan will remain in effect for 4 years, unless the Commission grants a petition to alter or amend the plan;
    3. That the plan disaggregates ICRM support into zones corresponding to the ILEC's SLC pricing zones or, if a carrier has not created SLC pricing zones, according to UNE pricing zones or, if a carrier does not have UNE pricing zones, then according to disaggregation zones established according to the parameters for establishing SLC pricing zones in Section III.J.1.(g) of this Plan.[60]

If the ILEC's amount of ICRM support changes during the term of the disaggregation plan (as it will if, *e.g.*, a disaggregation plan is filed before the end of the rate transition), the per-line amount available in each cost zone shall be recalculated using the changed support amount and lines at that point in time, maintaining the same ratios of per-line ICRM support among zones as existed at the beginning of the plan. Such ratios shall be publicly available.

A Zone Disaggregation Plan shall become effective on the first day of the quarter following the day the ILEC files the plan, including the requisite certification, with the FCC. The ILEC must concurrently file the plan with the Administrator. The ILEC may seek confidential treatment of any data contained in the Zone Disaggregation Plan pursuant to Section 0.457(d) of the Commission's rules.

---

[60] To the extent that a rate-of-return carrier receives support from the ICRM, it may use the zones established in an existing disaggregation plan it has established with respect to existing support.

(3) Residential Targeting Plans

ILECs will also be permitted to file with the FCC a "Residential Targeting Plan" that distributes support by targeting it only to residential customers to the extent that the ILEC can show that, in a particular SLC pricing zone, the Total Revenue Opportunity (defined as local rate, plus any state SLCs, plus federal SLCs, plus any state and federal universal service support other than ICRM attributable to that line, plus, for residential lines, any ICRM distributed on the basis of residential lines on a per-eligible-residential-line basis) for a residential line is less than the Total Revenue Opportunity for a multiline business line. The ILEC will be permitted to distribute ICRM support solely to eligible residential lines to the extent necessary to make the residential Total Revenue Opportunity equal the multiline business Total Revenue Opportunity. Once the total revenue opportunities are equalized, the ILEC must continue to distribute ICRM support solely to eligible residential lines, and must also, notwithstanding the nationwide SLC caps, increase multiline business SLCs by the amount of revenue that would have been distributed to such lines and reduce ICRM support by the amount of this increase.

To become effective, a Residential Targeting Plan must:

- Be filed with the FCC;
- Identify the Total Revenue Opportunity available for a residential line and for a multiline business line, separately by SLC pricing zone, if any, and describe the methodology used to calculate each, in sufficient detail for interested parties to make a meaningful analysis of how the ILEC derived its plan;
- State the ICRM support amount available to each residential eligible line in each SLC pricing zone, if any, and any adjustment to the MLB SLC in each zone, if any, as a result of this targeting;
- Include maps precisely identifying the boundaries of the ILEC's SLC pricing zones, if any; and
- Certify compliance with the following requirements:

    1. That the plan will not increase the total amount of ICRM support the ILEC would receive within a study area, as compared to what it would receive in the absence of a Residential Targeting Plan, holding demand constant;

    2. That the plan will remain in effect for 4 years, unless regulator grants a petition to alter or amend the plan; and

3. That the plan targets all ICRM to residential lines and, if the ILEC has created SLC pricing zones, disaggregates ICRM support according to such zones.

If the ILEC's amount of ICRM support changes while the Residential Targeting Plan is in effect, (as it will if, *e.g.*, a Residential Targeting Plan is filed before the end of the rate transition), the ILEC shall file a supplement to its Residential Targeting Plan showing the revised Total Revenue Opportunity computations (using the changed support amount and lines at that point in time), separately by SLC pricing zone, if any, and demonstrating compliance with the requirements of this section.

A Residential Targeting Plan shall become effective on the first day of the quarter following the day the ILEC files the plan, including the requisite certification, with the FCC. The ILEC must concurrently file the plan with the Administrator. The ILEC may seek confidential treatment of any data contained in the Zone Disaggregation Plan pursuant to Section 0.457(d) of the Commission's rules.

(4) ICRM Support Available to CETCs

A CETC offering service in the study area of an ILEC receiving ICRM support will receive the same support as the ILEC per eligible line served (as adjusted by any Zone Disaggregation Plan or Residential Targeting Plan). The FCC shall require the Administrator to publish information on the support amount available to each line, substantially equivalent to the information it publishes today with respect to other forms of USF support.

2. Calculation of Per-Line Amount

When a Price Cap ILEC or a CETC loses or gains eligible lines, it, respectively, loses or gains ICRM support accordingly. Depending upon whether the Commission limits the scope of high cost support to primary lines, the per-eligible-line support amount would be calculated as follows:[61]

a. OPTION 1: ICRM Applied to All Lines

If ICRM is applied to all lines within a study area on a uniform basis, the per-line amount shall be calculated by dividing the ICRM amount by current end user line demand. If an ILEC has disaggregated ICRM support by zone, then the per-line amount shall be calculated by dividing the amount of support assigned to each zone by end-user line demand in each zone. If the ILEC has targeted ICRM support to residential lines, the per-line amount shall be calculated by dividing total ICRM support by residential line demand.

---

[61] See Section V.B.5., below.

b. OPTION 2: Primary Line Restriction

If ICRM is applied uniformly to primary lines, the per-line amount shall be calculated by dividing the ICRM amount by current primary line demand, as defined by the Commission (except where the ILEC has established that it may disaggregate to residential lines only, in which case the denominator shall be primary residential line demand). If an ILEC has disaggregated ICRM support by zone, then the per-line amount shall be calculated by dividing the amount of support assigned to each zone by primary line demand in each zone. If the ILEC has targeted ICRM support to residential lines, the per-line amount shall be calculated by dividing total ICRM support by primary residential line demand.

B. Transitional Network Recovery Mechanism ("TNRM")

The TNRM will provide support to Covered Rural Telephone Companies, as well as certain CETCs competing with such carriers.

1. General Rules

The following rules apply to the distribution of support from the TNRM in areas served by Covered Rural Telephone Companies:

a) An ILEC that receives TNRM support shall have the opportunity to select a disaggregation path and file a plan that complies with Section 54.315 of the Commission's rules on or before July 1, 2006. Such a plan may (a) disaggregate TNRM in a manner consistent with other USF support under an existing disaggregation plan; or (b) disaggregate all TNRM and existing USF support according to the Commission's existing disaggregation rules. A state commission shall act on any carrier filing under Path 2 within 90 days.

b) A Price Cap CRTC will receive support on a per eligible line basis, as determined in Section III.F.1.c., above.

c) A Rate-of-Return CRTC will receive the amount of TNRM support determined according to Section III.F.2.a., above.

d) Because costs recovered from the TNRM are lost switched access dollars, any CETC, including a new entrant, that has lost switched access revenue (excluding end user charges) due to the implementation of this plan, as compared to what it would have received under existing rules had this plan not been adopted (an "Eligible CETC"), can receive support from the TNRM. Eligible CETCs will receive the same amount of TNRM support per eligible line as the ILEC serving the same area as of the later of July 1, 2005 or the first day of the calendar quarter for which the first CETC first begins receiving support ("the initialization date"), adjusted as follows:

CETC TNRM support per eligible line will increase or decrease in the same proportion that the applicable ILEC revenue requirement increases or decreases after the initialization date. CETC support per line will not change based on changes in ILEC line demand.

e) For a CETC that has not lost switched access revenue (excluding end user charges) due to the implementation of this plan, as compared to what it would have received under existing rules had this plan not been adopted (*e.g.*, some CMRS providers), the Commission will hold a proceeding to determine whether it would be in the public interest for those carriers to receive TNRM support after the expiration of the initial term of this Plan.

f) When a Price Cap CRTC or an eligible CETC loses or gains eligible lines, it, respectively, loses or gains per line support. The FCC shall require the Administrator to publish detailed information on the support amount available to each eligible line.

g) An ETC must certify that it uses the support it receives from the TNRM under this plan only for the provision, maintenance, and upgrading of facilities and services for which the support is intended in the service area where the need for that support originated.

2. Calculation of Per-Line Amount

When a Price Cap ILEC or a CETC loses or gains eligible lines, it, respectively, loses or gains ICRM support accordingly. Depending upon whether the Commission limits the scope of high cost support to primary lines, the per-eligible-line support amount would be calculated as follows:[62]

a. OPTION 1: TNRM Applied to All Lines

If TNRM is applied to all lines within a study area on a uniform basis, the per-line amount shall be calculated by dividing the ICRM amount by current end user line demand. If an ILEC has disaggregated ICRM support by zone, then the per-line amount shall be calculated by dividing the amount of support assigned to each zone by end-user line demand in each zone.

b. OPTION 2: Primary Line Restriction

If TNRM is applied uniformly to primary lines, as defined by the Commission, the per-line amount shall be calculated by dividing the TNRM amount by current primary line demand. If an ILEC has disaggregated TNRM support by zone, then the per-line amount

---

[62] See Section V.B.5., below.

shall be calculated by dividing the amount of support assigned to each zone by primary line demand in each zone.

V. Universal Service

A. Contribution Methodology

1. Principles

a. The contribution methodology should not give one vendor of a service a competitive advantage over another vendor of an equivalent service. All similar platforms should be treated in an equitable and nondiscriminatory fashion.

b. The mechanism should create the maximum amount of stability in the amount of the fee carriers impose on customers to collect USF contributions (*i.e.*, should not rise over time).

c. Carriers should be permitted to pass any such assessment through, dollar-for-dollar, to the customer that caused the carrier to incur the contribution obligation.

2. Methodology

a. General

(1) Universal service contributions shall be made based on the number of Unique Working Telephone Numbers (as defined in Section V.A.2.b.(1), below) a service provider uses for retail services, as well as certain network access connections, to the extent specified herein.

(2) Assessments shall be unit-based, with the Administrator setting the contribution level per unit based on demand for funds and the number of units reported by reporting entities.

(3) Each quarter, the Administrator shall compute a flat-rated monthly assessment per unit based on projected funding demand and reported projected units. This amount will be subject to true-up when actual figures are available.

(4) Implementation of this contribution mechanism will be on a bill-and-remit basis. Service providers are

permitted to pass any assessment through, dollar-for-dollar, to the customer purchasing the network connection assessed or to whom each Unique Working Telephone Number is assigned.[63]

(5) The effective date of the new contribution mechanism should provide an implementation period of 6 months following July 1, 2005. During the period between July 1, 2005, and January 1, 2006, the interstate end-user telecommunications revenue contribution factor would be frozen.

b. Unique Working Telephone Numbers

(1) The universal service administrator shall assess each Unique Working Telephone Number based on a weight of 1.0 unit. Under this Plan, a "Unique Working Telephone Number" is a North American Numbering Plan number assigned to a specific end user that provides the ability to receive calls. Thus, numbers that are provided to resellers, UNE-P-based providers, VOIP providers, and for other non-retail uses (other than numbers provided to such entities in their capacity as final consumers of services associated with such numbers), are not considered Unique Working Telephone Numbers of the provider of such numbers to such entities. Each such number shall be considered a Unique Working Telephone Number of the recipient reseller, UNE-P-based provider, or VOIP provider if such number is assigned by such entity to a specific end user and it provides the ability to receive calls.

(2) Wireless carriers on a nationwide basis, CRTCs, and other carriers competing within the geographic footprint of a CRTC's service territory may opt into an alternative contribution methodology under which contribution would be 1 unit on the first number in a residential household account and ½ unit on all additional numbers in that household account at the first step of the plan. Contribution on the additional residential numbers would increase to

[63] This includes with respect to existing contracts.

2/3 in the second step, ¾ in the third step, and 1 for 1 at the fourth step.

(3) A one-way, narrowband, data only CMRS paging service would be assessed as 1/2 of a unique working telephone number assessment.

c. Network Access Connections

In addition to the Unique Working Telephone Number assessment described above, certain network access connections to the public network shall also be assessed as follows:

(1) Residential

A service provider shall incur an obligation to contribute to universal service equal to 1.0 unit for each mass-marketed non-circuit-switched, dedicated network connection with a speed at least equal to that of "high speed" (as defined in the Commission's Advanced Services Proceeding, *Inquiry Concerning the Deployment of Advanced Telecommunications Capability to All Americans in a Reasonable And Timely Fashion, and Possible Steps To Accelerate Such Deployment Pursuant to Section 706 of the Telecommunications Act of 1996*, CC Docket No. 98-146) connections that it provides for a fee to an end user residential customer, without other regard for the capacity of that connection or technology employed, and specifically including, *e.g.*, residential broadband connections using DSL, cable modem technology, CMRS, point-to-point wireless, or satellite. The Commission shall eliminate any distinction between the treatment of DSL and cable modem technology for universal service contribution purposes.

(2) Business

(a) Tiered Contribution Obligations

A service provider shall incur an obligation to contribute to universal service equal to 1.0 unit for each non-switched, dedicated network connection with a speed at least equal to that of "high speed" (as defined in the Commission's Advanced Services Proceeding *Inquiry Concerning the Deployment of Advanced Telecommunications Capability to All Americans in a Reasonable And Timely Fashion, and Possible Steps To Accelerate Such Deployment Pursuant to Section 706 of the Telecommunications Act of 1996*, CC Docket No. 98-146) connections but less than 1.5 mbps that it provides for a fee to an end user business customer.

A service provider shall incur an obligation to contribute to universal service equal to 5.0 units for each non-switched, dedicated network connection of 1.5 mbps or more, but less than 45 mbps, that it provides for a fee to an end-user business customer.

A service provider shall incur an obligation to contribute to universal service equal to 40 units for each non-switched, dedicated network connection of 45 mbps or more but less than 200 mbps that it provides for a fee to an end-user business customer.

A service provider shall incur an obligation to contribute to universal service equal to 100 units for each non-switched, dedicated network connection of 200 mbps or more that it provides for a fee to an end-user business customer.

At intervals of no greater than every three years, the Commission shall examine whether these thresholds are commercially reasonable in light of advances in technology and, if in the public interest, adjust the thresholds accordingly.

(b) Treatment of Wi-Fi "Hot Spots"

No contributions shall be required from public Wi-Fi hot spot end-users. Carriers who provide access to Wi-Fi hot spots would contribute based on the capacity of the connection to the Wi-Fi hot spot (1 unit if the connection is less than 45 mbps: 5 units if 45 mbps or greater).

(3) Services Provided to Resellers, UNE-P Providers, and VOIP Providers

Network connections otherwise subject to assessment under this Section V.A.2.c that are provided to resellers, UNE-P-based providers, VOIP providers, and for other non-retail uses, shall not be assessed to the provider of such services to such entities (except to the extent that such network connections are provided to such entities in their capacity as final consumers of such network connections). Each such network connection shall be assessed to the recipient reseller, UNE-P-based provider, or VOIP provider if such network connection is provided by such entity to a specific end user residential or business customer of such entity as described above.

d. Assessment and reporting procedure:

The Commission shall develop a quarterly report to be filed by each provider of Unique Working Telephone Numbers or services subject to assessment under the contribution mechanism specified in this Plan (including resellers, UNE-P providers, VOIP providers, and other recipients of Unique Working Telephone Numbers or network connections on a non-retail basis), in which such provider shall project for the upcoming quarter the volume of such Unique Working Telephone Numbers and network connections that it will provide in the upcoming quarter. The Administrator shall aggregate these projections and determine, based on projected demand for universal service funding in the upcoming quarter, the unit value to be assessed in the upcoming quarter.

The Commission shall also establish a certification program, similar to that currently used in connection with the Form 499 filings, to establish reseller, UNE-P, VOIP, *de minimis*, and any necessary similar categories of providers.

B. Other USF Issues

1. Lifeline support for low-income consumers will automatically adjust pursuant to 47 C.F.R. 54.403(a) to offset all changes to the SLC for Lifeline subscribers.

2. The nationwide cap on High Cost Loop Support will be removed, and the National Average Unseparated Loop Cost Per Working Loop specified in Section 36.622(a) of the Commission's rules shall be unfrozen, as of July 1, 2005. This would be reexamined at the end of eight years, but not before.

3. Elimination of Disparate Treatment of High Cost Loop Support Based Upon Study Area Size. Section 36.631 of the Commission's rules shall be modified to eliminate the different support percentages for study areas depending upon the number of working loops in the study areas. The current trigger of a study area's cost per loop requirement to exceed the 115 percent national average trigger is sufficient to assure that support is provided only to rural areas with high cost loop and need for support. This change will assure that all high cost study areas receive per loop support on an equal per loop basis. The ICF recommends that state commissions be made aware of the study areas that would be impacted by this modification and that the state commissions, as required today, continue to certify that the affected carriers will utilize any increase in the funded amounts in the study areas in which the funding is received and in the manner intended by the Act. Section 36.631(d) of the Commission rules should be deleted. Section 36.631(c) shall be modified as follows:

   > "(c) Beginning January 1, 2006, for all study areas reporting working loops pursuant to § 36.611(h), ..."

4. ICLS support would be determined as if existing SLC caps remained in place, unless the Residential and Single Line Business SLC in a particular ILEC study area does not reach the Nationwide Cap, in which case ICLS support to that study area would be reduced until all SLCs reached the cap, or ICLS support was eliminated.

5. The ICF takes no position regarding changes to ETC eligibility requirements or guidelines as discussed in the Joint Board's Recommended Decision dated February 27, 2004 ("Recommended Decision"). The ICF also takes no position regarding whether the Commission should implement a primary-line-based support mechanism, as discussed in the Recommended Decision.

6. For the term of this plan, all USF support under existing mechanisms remain portable to all ETCs that, regardless of technology used to provide the service, satisfy the applicable designation and certification requirements. For the term of this plan, an ILEC ETC's support other than under IAS and HCM Support, will be calculated based on ILEC embedded costs. During this same period, for these mechanisms other than IAS and HCM Support, ETCs other than the ILEC will receive the same amount of support per eligible line as the ILEC serving the same area as of the later of July 1, 2005 or the first day of the calendar quarter for which the first CETC first begins receiving support ("the initialization date"), adjusted as follows: CETC support per line will increase or decrease in the same proportion that the applicable ILEC revenue requirement (*e.g.* unseparated cost per loop for HCLS, common line revenue requirement less line port costs in excess of basic and special access surcharges for ICLS, and, for LSS, the unseparated local switching revenue requirement) increases or decreases after the initialization date. CETC support per line will not change based on changes in ILEC line demand. If the ILEC crosses one of the tiers in Section 36.125(f) of the Commission's rules, so that a new weighting factor applies for purposes of calculating LSS, the CETC's LSS per line shall also be adjusted by the same proportion as the change in the ILEC's aggregate LSS. If the level of support provided by any explicit federal support mechanism to an ILEC changes due to exogenous events, such as the sale or purchase of exchanges, changes to jurisdictional separations, the capping or uncapping of support, or other similar events, the per-line support amount available to a CETC shall be adjusted in the same proportion to the change in the aggregate support provided by the affected support mechanism to the ILEC.

7. All ETCs – ILECs and CETCs – should be subject to fully comparable, competitively and technologically neutral, requirements regarding customer service, service quality, and provisioning of service to requesting customers within a reasonable period of time. The customer service, service quality, and provisioning requirements that currently apply to ILECs under existing state laws and regulations may not necessarily be appropriate for this purpose. For example, regulations applicable to carriers because of dominant status should not apply to CETCs, unless the CETC is found to be dominant in the market.

8. Safety Valve for High Cost Loop Support. The Safety Valve for High Cost Loop Support to exchanges acquired by rural ILECs

(contained in Section 54.305 of the Commission's rules) shall be modified as follows:

a. The buyer is eligible for safety valve support immediately following the acquisition of rural exchanges based on a showing of actual investment in the acquired properties.

b. The measure of cost for the "base line" should be the cost per loop of the seller at the time of the transaction. This will provide the best measure of the buyer's increased investment, and benefit the rural customers.

c. A rural ILEC shall receive 75 percent of the difference between its average loop cost and the base line loop cost in the partial year (if applicable) and first full year after close of a transaction. In subsequent years, the carrier would be eligible for 50 percent of that difference, as under the current rule.

d. The existing 5 percent cap on aggregate safety valve support contained in Section 54.305(e) shall remain in place.

9. High Cost Support Option for Certain Price Cap CRTCs

a. A price cap CRTC that does not, as of July 1, 2005, receive rural high-cost loop support (and of which none of the affiliates that are incumbent local exchange carriers within the same holding company as such carrier receives rural high cost loop support as of July 1, 2005) may elect, as of July 1, 2005, to participate in the non-rural high-cost loop support mechanism (*i.e.* pursuant to 47 C.F.R. 54.309) based on the high-cost model.

b. One-time Option: If a carrier elects to participate in the non-rural high-cost loop support mechanism, as provided above, all the study areas within the same holding company as the electing carrier must make the same election. However, nothing herein shall affect the participation in the rural or non-rural high cost loop support mechanisms by any non-electing carrier that may be acquired by an electing carrier after its election of this option. Further, if any electing carrier (or assets owned by an electing carrier) are acquired after the election described above, nothing herein will affect the buyer's status as a participant in the rural or non-rural high-cost loop support mechanisms.

VI. Other Issues

A. Term Of The Plan

Except as expressly specified (*e.g.*, for the rate regulations applicable to transit service offered by transiting carriers), after the end of the eight-year period, the rules described herein will continue in effect unless and until modified or replaced by the Commission. In addition, this Plan specifies certain issues for review by the Commission at the conclusion of the initial eight-year term.

B. FCC Proceeding

During Step 5, the FCC shall commence a proceeding to evaluate whether the transition of the termination rate to zero should be longer or shorter than is otherwise called for in the rules implementing the ICF Plan. In this proceeding, the FCC shall also consider whether regulation-induced arbitrage remains a prevalent issue that will not be addressed through operation of the Plan. All carriers shall continue to abide by the schedule in the rules implementing the Plan during the pendency of this proceeding, unless and until the FCC makes an affirmative finding that it would not be in the public interest for a carrier to do so, and issues revisions to its rules setting forth a new schedule.

Appendix A – Carrier Responsibilities in Tandem Transit Situations
[This Appendix is illustrative only]

a. Tandem Transit Provider Responsibilities

i. Receive and aggregate traffic volume forecasts provided by Ordering Carriers.

ii. Issue Trunk Group Service Requests (TGSRs) to interconnecting carriers to initiate trunk re-sizing.

iii. Process transit trunk Access Service Requests (ASRs) from carriers.

iv. Provision trunk groups between the tandem switch and interconnecting switches.

v. Load NPA-NXX and other traffic routing codes to tandem for call processing.

vi. Exchange SS7 signaling messages with originating and terminating carriers.

vii. Provide tandem (trunk-to-trunk) switching and common transport between the tandem switch and terminating switch.

viii. Pass originating carrier identification parameters and CPN to the terminating carrier, where provided by the Ordering Carrier.

ix. Resolve trunk blocking incidents with affected carriers.

x. Work cooperatively with the affected carrier to restore trunk outages.

xi. Where the interconnecting carriers are expected to take some action at certain transit traffic volume thresholds, provide notice to the affected carriers when the threshold is met.

xii. Bill transit fees to the Ordering Carrier.

b. Ordering Carrier Responsibilities

i. Pay transit fees;

ii. Perform control office functions (overall coordination for installation and maintenance)

iii. Exchange SS7 signaling messages with transiting and terminating carriers

iv. Issue trunking ASRs to establish or re-size trunk groups.

v. Respond to TGSRs from Tandem Transit Provider.

vi. Pay intercarrier compensation to Non-Ordering carriers, if applicable.

vii. When the Ordering Carrier is the originating carrier:

1. Provide originating traffic forecasts to Tandem Transit Provider.

2. send carrier identification parameters to Tandem Transit Provider (per message)

3. Provide network protective protocols such as call gapping or choke trunks

4. Provide carrier identification and parameters and CPN in the appropriate SS7 field to the Tandem Transit Provider, in conformance with current OBF standards.

c. Non-Ordering Carrier Responsibilities

i. When the Non-Ordering Carrier is the originating carrier, comply with duties of originating carriers set forth in b.vii. of this Appendix, above;

ii. Issue trunking ASRs to requesting transit providers.

iii. Perform control office functions on trunk groups.

iv. Exchange SS7 signaling messages with originating and transiting carriers.

v. Respond to TSGRs from a Tandem Transit Provider.

vi. Pay intercarrier compensation to Ordering carriers, if applicable.

Appendix B – ICRM/ Pricing Charts

Price Cap Non-CRTC SLC Transition and "As if" ICRM Calculation Under the ICF Plan: Assuming $1.00/Line Shift per Step

Scenario 1

STEP 0:	Price Cap Demand (M)	Demand Under Contracts (M)	Base Period Demand With Contracts (M)	June 30, 2005 SLC Rates	Adjusted CMT Per Line	Access Shift Per Step ($/Line)
Primary	60	0	60	$6.50		$1.00
Non-Primary	10	0	10	$7.00		$1.00
MLB	20	10	30	$9.00		$1.00
AGGREGATE	90	10	100	n/a	$7.30	$1.00

	Derivation of "As If" SLC Revenue/Line Per ICF Plan					Calculation of ICRM (*As If*)		
ICF: STEP 1	Cumulative Access Shift Per Step ($/Line)	Permitted Revenue Recovery/Line	Nationwide SLC Cap/Line	Average SLC Rate Increase Limit	"As If" SLC Revenue /Line	Potential SLC Revenue	Max. Line Recovery Revenue	ICRM ($ M)
	A	B= A+ CMT/Line	C	D=SLC+Avg. Limit Per Step*	E=**	F = E*Demand with Contracts	G = B*Demand with Contracts	H = G - F
Primary	$1.00	$8.30	$7.25	$7.25	$7.25	$435.00	$498.00	
Non-Primary	$1.00	$8.30	$7.25	$7.75	$7.25	$72.50	$83.00	
MLB	$1.00	$8.30	$9.20	$9.75	$9.00	$270.00	$249.00	
AGGREGATE	$1.00	$8.30	n/a	n/a	n/a	$777.50	$830.00	$52.50
ICF: STEP 2	Cumulative Access Shift/Line	Permitted Revenue Recovery/Line	Nationwide SLC Cap/Line	Average SLC Rate Increase Limit	"As If" SLC Revenue /Line	Potential SLC Revenue	Max. Line Recovery Revenue	ICRM ($ M)
Primary	$2.00	$9.30	$8.00	$8.00	$8.00	$480.00	$558.00	
Non-Primary	$2.00	$9.30	$8.00	$8.50	$8.00	$80.00	$93.00	
MLB	$2.00	$9.30	$9.20	$10.50	$9.00	$270.00	$279.00	
AGGREGATE	$2.00	$9.30				$830.00	$930.00	$100.00
ICF: STEP 3* **	Cumulative Access Shift/Line	Permitted Revenue Recovery/Line	Nationwide SLC Cap/Line	Average SLC Rate Increase Limit	"As If" SLC Revenue /Line	Potential SLC Revenue	Max. Line Recovery Revenue	ICRM ($ M)
Primary	$3.00	$10.30	$9.00	$9.00	$9.00	$540.00	$618.00	
Non-Primary	$3.00	$10.30	$9.00	$9.50	$9.00	$90.00	$103.00	
MLB	$3.00	$10.30	$9.20	$11.50	$9.00	$270.00	$309.00	
AGGREGATE	$3.00	$10.30				$900.00	$1,030.00	$130.00
ICF: STEP 4	Cumulative Access Shift/Line	Permitted Revenue Recovery/Line	Nationwide SLC Cap/Line	Average SLC Rate Increase Limit	"As If" SLC Revenue /Line	Potential SLC Revenue	Max. Line Recovery Revenue	ICRM ($ M)
Primary	$4.00	$11.30	$10.00	$10.00	$10.00	$600.00	$678.00	
Non-Primary	$4.00	$11.30	$10.00	$10.50	$10.00	$100.00	$113.00	
MLB	$4.00	$11.30	$10.00	$12.50	$10.00	$300.00	$339.00	
AGGREGATE	$4.00	$11.30				$1,000.00	$1,130.00	$130.00
ICF: STEP 5	Cumulative Access Shift/Line	Permitted Revenue Recovery/Line	Nationwide SLC Cap/Line****	Average SLC Rate Increase Limit	"As If" SLC Revenue /Line	Potential SLC Revenue	Max. Line Recovery Revenue	ICRM ($ M)
Primary	$4.00	$11.30	$10.00	n/a	$10.00	$600.00	$678.00	
Non-Primary	$4.00	$11.30	$10.00	n/a	$10.00	$100.00	$113.00	
MLB	$4.00	$11.30	$10.00	n/a	$10.00	$300.00	$339.00	
AGGREGATE	$4.00	$11.30				$1,000.00	$1,130.00	$130.00

* Average Enduser Rate Increase Limit: In Step 1, $0.75; in Step 2, $1.50; in Step 3, $2.50; and in Step 4, $3.50

**"As If" SLC Rates Are Selected As : For Primary/Non-Primary , it would the Lesser of Columns B,C, and D
For MLB, it would be the Maximum of June 30, 2005 Rate and Lesser of Columns B,C, and D

*** Assumed Transport Shift in Step 3 Would Be Less Than or Equal To 25% of Total Access Shift

**** In Step 5 and annually thereafter, $10.00 Cap shall be adjusted at the rate of inflation as measured by annual change in GDP Chain-Weighted Price Index

NOTE: Lines under contracts are included in "*As If*" *ICRM calculation.*

Price Cap Non-CRTC SLC Transition and "As if" ICRM Calculation Under the ICF Plan: Assuming $0.90/Line Shift per Step

Scenario 2

STEP 0:	Price Cap Demand (M)	Demand Under Contracts (M)	Base Period Demand With Contracts (M)	June 30, 2005 SLC Rates	Adjusted CMT Per Line	Access Shift Per Step ($/Line)
Primary	60	0	60	$6.00		$0.90
Non-Primary	10	0	10	$6.00		$0.90
MLB	20	10	30	$6.00		$0.90
AGGREGATE	90	10	100	n/a	$6.00	$0.90

	Derivation of "As If" SLC Revenue/Line Per ICF Plan					Calculation of ICRM (*As If*)		
ICF: STEP 1	Cumulative Access Shift Per Step ($/Line)	Permitted Revenue Recovery/Line	Nationwide SLC Cap/Line	Average SLC Rate Increase Limit	"As If" SLC Revenue/Line	Potential SLC Revenue	Max. Line Recovery Revenue	ICRM ($ M)
	A	B= A+ CMT/Line	C	D=SLC+Avg. Limit Per Step*	E=**	F = E*Demand with Contracts	G = B*Demand with Contracts	H = G - F
Primary	$0.90	$6.90	$7.25	$6.75	$6.75	$405.00	$414.00	
Non-Primary	$0.90	$6.90	$7.25	$6.75	$6.75	$67.50	$69.00	
MLB	$0.90	$6.90	$9.20	$6.75	$6.75	$202.50	$207.00	
AGGREGATE	$0.90	$6.90	n/a	n/a	n/a	$675.00	$690.00	$15.00
ICF: STEP 2	Cumulative Access Shift/Line	Permitted Revenue Recovery/Line	Nationwide SLC Cap/Line	Average SLC Rate Increase Limit	"As If" SLC Revenue/Line	Potential SLC Revenue	Max. Line Recovery Revenue	ICRM ($ M)
Primary	$1.80	$7.80	$8.00	$7.50	$7.50	$450.00	$468.00	
Non-Primary	$1.80	$7.80	$8.00	$7.50	$7.50	$75.00	$78.00	
MLB	$1.80	$7.80	$9.20	$7.50	$7.50	$225.00	$234.00	
AGGREGATE	$1.80	$7.80				$750.00	$780.00	$30.00
ICF: STEP 3* **	Cumulative Access Shift/Line	Permitted Revenue Recovery/Line	Nationwide SLC Cap/Line	Average SLC Rate Increase Limit	"As If" SLC Revenue/Line	Potential SLC Revenue	Max. Line Recovery Revenue	ICRM ($ M)
Primary	$2.70	$8.70	$9.00	$8.50	$8.50	$510.00	$522.00	
Non-Primary	$2.70	$8.70	$9.00	$8.50	$8.50	$85.00	$87.00	
MLB	$2.70	$8.70	$9.20	$8.50	$8.50	$255.00	$261.00	
AGGREGATE	$2.70	$8.70				$850.00	$870.00	$20.00
ICF: STEP 4	Cumulative Access Shift/Line	Permitted Revenue Recovery/Line	Nationwide SLC Cap/Line	Average SLC Rate Increase Limit	"As If" SLC Revenue/Line	Potential SLC Revenue	Max. Line Recovery Revenue	ICRM ($ M)
Primary	$3.60	$9.60	$10.00	$9.50	$9.50	$570.00	$576.00	
Non-Primary	$3.60	$9.60	$10.00	$9.50	$9.50	$95.00	$96.00	
MLB	$3.60	$9.60	$10.00	$9.50	$9.50	$285.00	$288.00	
AGGREGATE	$3.60	$9.60				$950.00	$960.00	$10.00
ICF: STEP 5	Cumulative Access Shift/Line	Permitted Revenue Recovery/Line	Nationwide SLC Cap/Line****	Average SLC Rate Increase Limit	"As If" SLC Revenue/Line	Potential SLC Revenue	Max. Line Recovery Revenue	ICRM ($ M)
Primary	$3.60	$9.60	$10.00	n/a	$9.60	$576.00	$576.00	
Non-Primary	$3.60	$9.60	$10.00	n/a	$9.60	$96.00	$96.00	
MLB	$3.60	$9.60	$10.00	n/a	$9.60	$288.00	$288.00	
AGGREGATE	$3.60	$9.60				$960.00	$960.00	$0.00

* Average Enduser Rate Increase Limit: In Step 1, $0.75; in Step 2, $1.50; in Step 3, $2.50; and in Step 4, $3.50

**"As If" SLC Rates Are Selected As : For Primary/Non-Primary , it would the Lesser of Columns B,C, and D
For MLB, it would be the Maximum of June 30, 2005 Rate and Lesser of Columns B,C, and D

*** Assumed Transport Shift in Step 3 Would Be Less Than or Equal To 25% of Total Access Shift

**** In Step 5 and annually thereafter, $10.00 Cap shall be adjusted at the rate of inflation as measured by annual change in GDP Chain-Weighted Price Index

NOTE: Lines under contracts are included in "*As If*" *ICRM calculation.*

Price Cap Basket Calculation Under the ICF Plan: Assuming $1.00/Line Shift per Step

Scenario 1 A

STEP 0:	Price Cap Demand (M)	Demand Under Contracts (M)	Base Period Demand With Contracts (M)	June 30, 2005 SLC Rates	Adjusted CMT Per Line	Access Shift Per Step ($/Line)
Primary	60	0	60	$6.50		$1.00
Non-Primary	10	0	10	$7.00		$1.00
MLB	20	10	30	$9.00		$1.00
AGGREGATE	90	10	100	n/a	$7.30	$1.00

Derivation of "As If" SLC Revenue/Line Per ICF Plan

ICF: STEP 1	Cumulative Access Shift Per Step ($/Line)	Permitted Revenue Recovery/Line	Nationwide SLC Cap/Line	Average SLC Rate Increase Limit	"As If" SLC Revenue /Line
	A	B= A+ CMT/Line	C	D=SLC+Avg. Limit Per Step*	E=**
Primary	$1.00	$8.30	$7.25	$7.25	$7.25
Non-Primary	$1.00	$8.30	$7.25	$7.75	$7.25
MLB	$1.00	$8.30	$9.20	$9.75	$9.00
ICF: STEP 2	**Cumulative Access Shift/Line**	**Permitted Revenue Recovery/Line**	**Nationwide SLC Cap/Line**	**Average SLC Rate Increase Limit**	**"As If" SLC Revenue /Line**
Primary	$2.00	$9.30	$8.00	$8.00	$8.00
Non-Primary	$2.00	$9.30	$8.00	$8.50	$8.00
MLB	$2.00	$9.30	$9.20	$10.50	$9.00
ICF: STEP 3* **	**Cumulative Access Shift/Line**	**Permitted Revenue Recovery/Line**	**Nationwide SLC Cap/Line**	**Average SLC Rate Increase Limit**	**"As If" SLC Revenue /Line**
Primary	$3.00	$10.30	$9.00	$9.00	$9.00
Non-Primary	$3.00	$10.30	$9.00	$9.50	$9.00
MLB	$3.00	$10.30	$9.20	$11.50	$9.00
ICF: STEP 4	**Cumulative Access Shift/Line**	**Permitted Revenue Recovery/Line**	**Nationwide SLC Cap/Line**	**Average SLC Rate Increase Limit**	**"As If" SLC Revenue /Line**
Primary	$4.00	$11.30	$10.00	$10.00	$10.00
Non-Primary	$4.00	$11.30	$10.00	$10.50	$10.00
MLB	$4.00	$11.30	$10.00	$12.50	$10.00

Price Cap End User Revenue Calculation By Market Basket

Service Category	Revenue ($ M)
Mass Market (PR +NPR)	$507.50
Enterprise Market (MLB)	$180.00
Service Category	**Revenue ($ M)**
Mass Market (PR +NPR)	$560.00
Enterprise Market (MLB)	$180.00
Service Category	**Revenue ($ M)**
Mass Market (PR +NPR)	$630.00
Enterprise Market (MLB)	$180.00
Service Category	**Revenue ($ M)**
N/A	

* Average Enduser Rate Increase Limit: In Step 1, $0.75; in Step 2, $1.50; in Step 3, $2.50; and in Step 4, $3.50

**"As If" SLC Rates Are Selected As : For Primary/Non-Primary , it would the Lesser of Columns B,C, and D
For MLB, it would be the Maximum of June 30, 2005 Rate and Lesser of Columns B,C, and D

*** Assumed Transport Shift in Step 3 Would Be Less Than or Equal To 25% of Total Access Shift

**** In Step 5 and annually thereafter, $10.00 Cap shall be adjusted at the rate of inflation as measured by annual change in GDP Chain-Weighted Price Index

NOTE: Lines under contracts are excluded from price cap basket calculations, even though they are included in the ICRM calculation

Price Cap Basket Calculation Under the ICF Plan: Assuming $0.90/Line Shift per Step

Scenario 2 A

STEP 0:	Price Cap Demand (M)	Demand Under Contracts (M)	Base Period Demand With Contracts (M)	June 30, 2005 SLC Rates	Adjusted CMT Per Line	Access Shift Per Step ($/Line)
Primary	60	0	60	$6.00		$0.90
Non-Primary	10	0	10	$6.00		$0.90
MLB	20	10	30	$6.00		$0.90
AGGREGATE	90	10	100	n/a	$6.00	$0.90

Derivation of "As If" SLC Revenue/Line Per ICF Plan

ICF: STEP 1	Cumulative Access Shift Per Step ($/Line)	Permitted Revenue Recovery/Line	Nationwide SLC Cap/Line	Average SLC Rate Increase Limit	"As If" SLC Revenue /Line
	A	B= A+ CMT/Line	C	D=SLC+Avg. Limit Per Step*	E=**
Primary	$0.90	$6.90	$7.25	$6.75	$6.75
Non-Primary	$0.90	$6.90	$7.25	$6.75	$6.75
MLB	$0.90	$6.90	$9.20	$6.75	$6.75

ICF: STEP 2	Cumulative Access Shift/Line	Permitted Revenue Recovery/Line	Nationwide SLC Cap/Line	Average SLC Rate Increase Limit	"As If" SLC Revenue /Line
Primary	$1.80	$7.80	$8.00	$7.50	$7.50
Non-Primary	$1.80	$7.80	$8.00	$7.50	$7.50
MLB	$1.80	$7.80	$9.20	$7.50	$7.50

ICF: STEP 3***	Cumulative Access Shift/Line	Permitted Revenue Recovery/Line	Nationwide SLC Cap/Line	Average SLC Rate Increase Limit	"As If" SLC Revenue /Line
Primary	$2.70	$8.70	$9.00	$8.50	$8.50
Non-Primary	$2.70	$8.70	$9.00	$8.50	$8.50
MLB	$2.70	$8.70	$9.20	$8.50	$8.50

ICF: STEP 4	Cumulative Access Shift/Line	Permitted Revenue Recovery/Line	Nationwide SLC Cap/Line	Average SLC Rate Increase Limit	"As If" SLC Revenue /Line
Primary	$3.60	$9.60	$10.00	$9.50	$9.50
Non-Primary	$3.60	$9.60	$10.00	$9.50	$9.50
MLB	$3.60	$9.60	$10.00	$9.50	$9.50

Price Cap End User Revenue Calculation By Market Basket

Service Category	Revenue ($ M)
Mass Market (PR +NPR)	$472.50
Enterprise Market (MLB)	$135.00

Service Category	Revenue ($ M)
Mass Market (PR +NPR)	$525.00
Enterprise Market (MLB)	$150.00

Service Category	Revenue ($ M)
Mass Market (PR +NPR)	$595.00
Enterprise Market (MLB)	$170.00

Service Category	Revenue ($ M)
N/A	

* Average Enduser Rate Increase Limit: In Step 1, $0.75; in Step 2, $1.50; in Step 3, $2.50; and in Step 4, $3.50

**"As If" SLC Rates Are Selected As : For Primary/Non-Primary , it would the Lesser of Columns B,C, and D
For MLB, it would be the Maximum of June 30, 2005 Rate and Lesser of Columns B,C, and D

*** Assumed Transport Shift in Step 3 Would Be Less Than or Equal To 25% of Total Access Shift

**** In Step 5 and annually thereafter, $10.00 Cap shall be adjusted at the rate of inflation as measured by annual change in GDP Chain-Weighted Price Index

NOTE: Lines under contracts are excluded from price cap basket calculations, even though they are included in the ICRM calculation

Appendix E

Typical Interconnection Arrangements in Today's Environment

Disclaimer: The POI locations are for illustrative purposes only. POI locations may vary for each call flow, are subject to various disputes and varying state arbitration decisions.

Intercarrier Compensation Rates

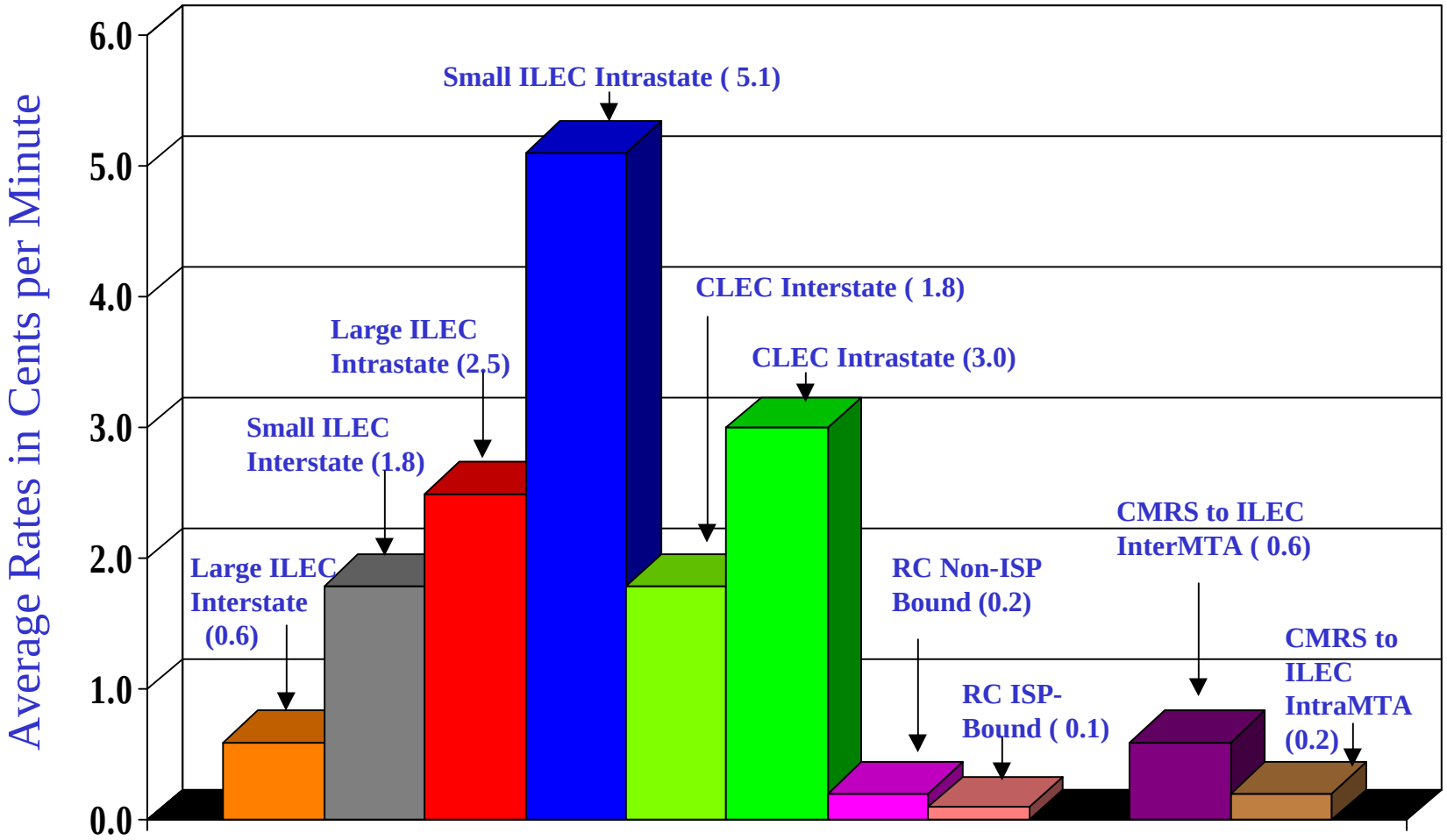

High (¢/min):	1.5	8.9	9.9	34.9	6.8	35.9	0.3	0.1	8.9	0.3
Low (¢/min):	0.5	0.3	0.4	0.7	0.2	0.4	0.0	0.0	0.2	0.0

IXC & ILEC Traffic – Tandem Routed

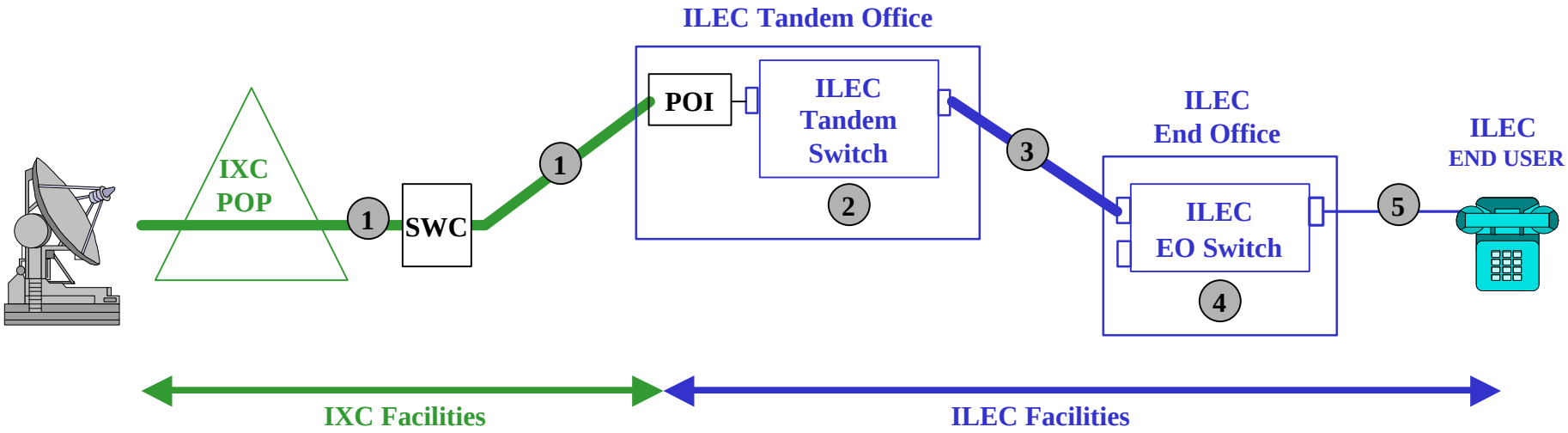

Financial Responsibility: IXC financially responsible for the cost of both directions of traffic from the ILEC end-user to IXC POP. Subject to widely varying rates depending on jurisdiction (interstate/intrastate) and widely varying local/long distance calling scopes.

For Both Directions of Traffic

	NETWORK FUNCTION	PAID BY	PAID TO
1	Dedicated Transport	IXC	Dedicated Transport Provider*
2	Tandem Switching	IXC	ILEC
3	Common Transport	IXC	ILEC
4	End Office Switching	IXC	ILEC
5	Common Line	IXC	ILEC

*IXC may self-provision.

IXC & ILEC Traffic – End Office Routed

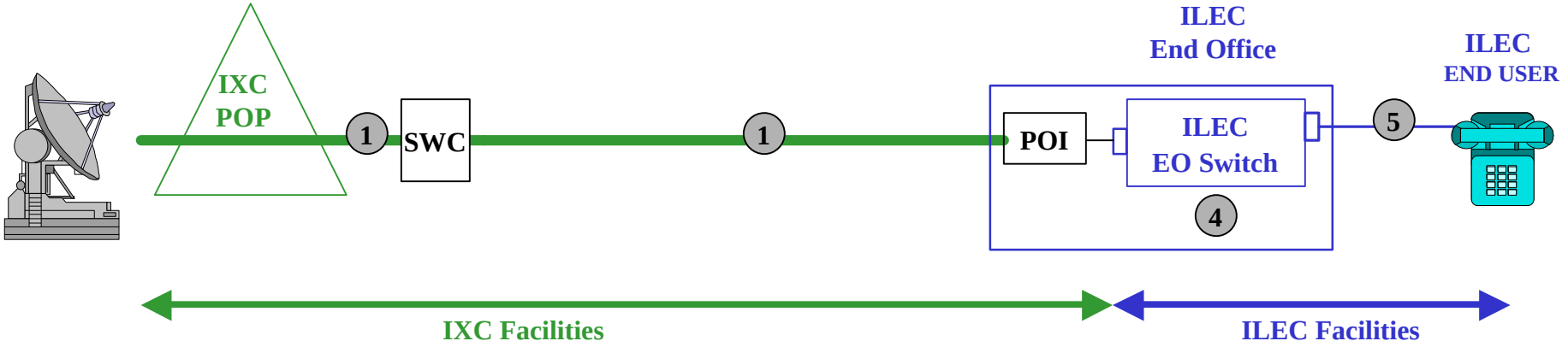

Financial Responsibility: IXC financially responsible for the cost of both directions of traffic from the ILEC end-user to IXC POP. Subject to widely varying rates depending on jurisdiction (interstate/intrastate) and widely varying local/long distance calling scopes.

For Both Directions of Traffic

	NETWORK FUNCTION	PAID BY	PAID TO
1	Dedicated Transport	IXC	Dedicated Transport Provider*
4	End Office Switching	IXC	ILEC
5	Common Line	IXC	ILEC

*IXC may self-provision.

ILEC to ILEC

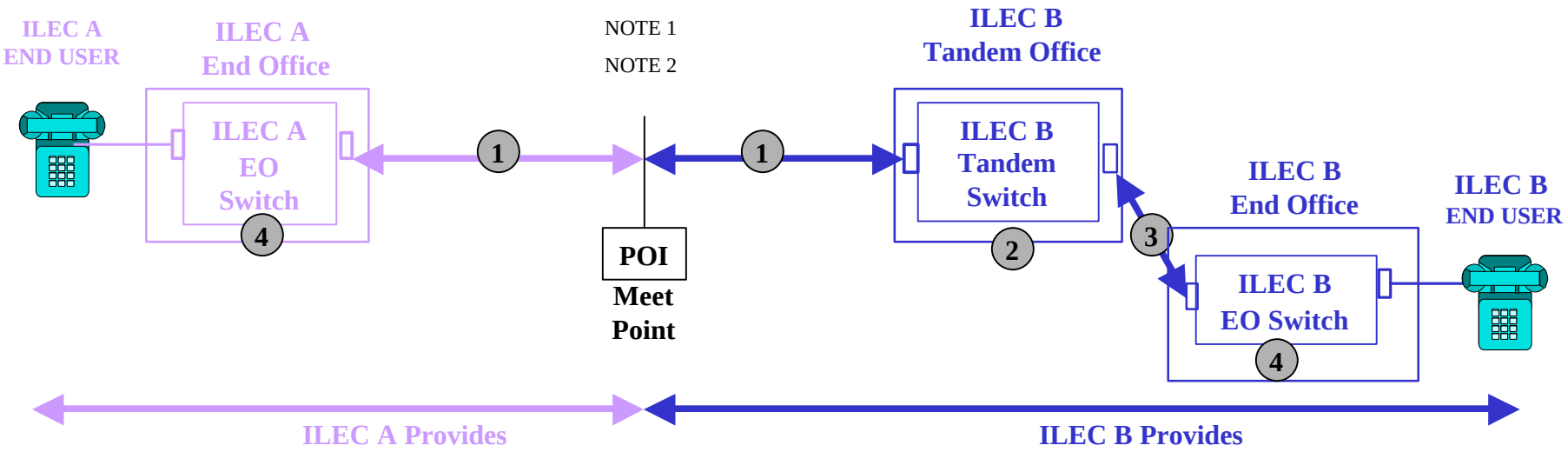

Financial Responsibility: Each company is responsible for facilities on its side of the POI or meet point. Generally, the financial responsibility is Calling Party Network Pays (CPNP). However, varying rate structures lead to asymmetrical charges and transport obligations. Often times the compensation arrangement is bill and keep.

		Originating from ILEC A		Originating from ILEC B	
	NETWORK FUNCTION	**PAID BY**	**PAID TO**	**PAID BY**	**PAID TO**
1	Transport – jointly provisioned	Note 3	Note 3	Note 3	Note 3
2	Tandem Switching	ILEC A	ILEC B	N/A	N/A
3	Common Transport	ILEC A	ILEC B	N/A	N/A
4	End Office Switching	ILEC A	ILEC B	ILEC B	ILEC A

Note 1 – Carries traffic from a variety of carriers.

Note 2 – Separate facilities are established between the ICO and ILEC for carrying EAS type traffic.

Note 3 – Each ILEC provides facilities for both originating and terminating traffic to the POI or meet point.

CLEC & ILEC Traffic – Tandem Routed

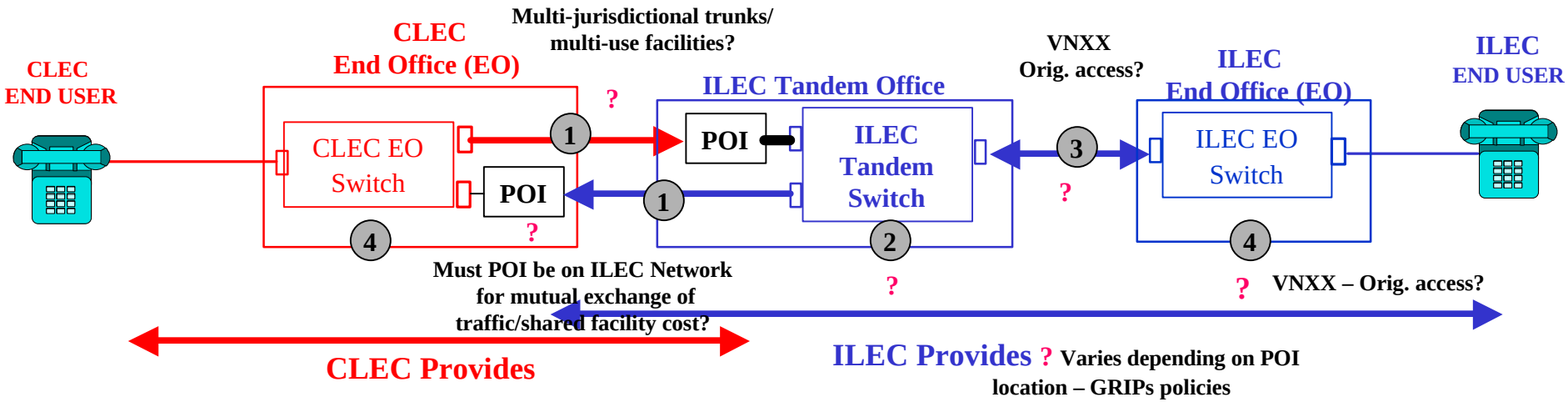

Financial Responsibility: CPNP.

Areas of Dispute: 1) Section 51.711(a)(3)(application of the tandem rate rule); 2) Use of Virtual NXX; 3) Network Function 1 may be subject to dispute regarding both physical & financial responsibility.

		Originating from CLEC			Originating from ILEC	
	NETWORK FUNCTION	**PAID BY**	**PAID TO**		**PAID BY**	**PAID TO**
1	Dedicated Transport	CLEC	Dedicated Transport Provider*		ILEC	CLEC
2	Tandem Switching	CLEC	ILEC		N/A	N/A
3	Common Transport	CLEC	ILEC		N/A	N/A
4	End Office Switching	CLEC	ILEC		ILEC	CLEC

*CLEC may self-provision.

CLEC to CLEC Traffic

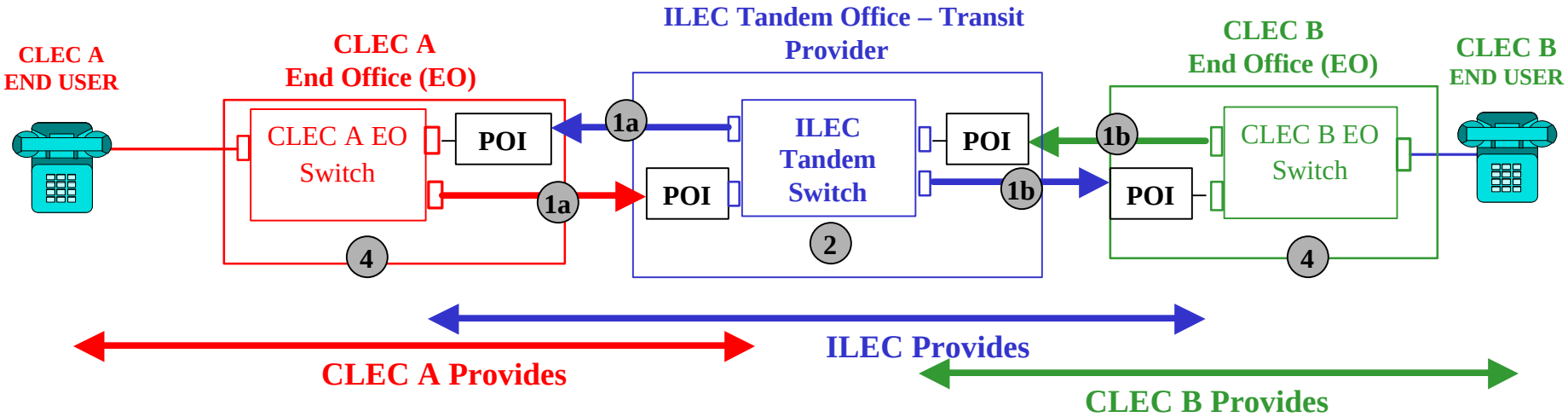

Financial Responsibility: CPNP governs traffic exchange. Originating carrier pays ILEC for transiting service. Switching and transport (excluding ILEC switching and transport) is typically bill & keep.

Area of Dispute:. 1) Network Function 1a & 1b may be subject to dispute regarding both physical & financial responsibility; 2) ILEC tandem transit obligation/rate

		Originating from CLEC A		Originating from CLEC B	
	NETWORK FUNCTION	**PAID BY**	**PAID TO**	**PAID BY**	**PAID TO**
1	Dedicated Transport	a) CLEC A b) CLEC A	a) CLEC A or ILEC b) CLEC B	a) CLEC B b) CLEC B	a) CLEC A or ILEC b) CLEC B or ILEC
2	Tandem Switching	CLEC A	ILEC	CLEC B	ILEC
4	End Office Switching	CLEC A	CLEC B	CLEC B	CLEC A

Independent Company (ILEC Tandem Routed) & CLEC

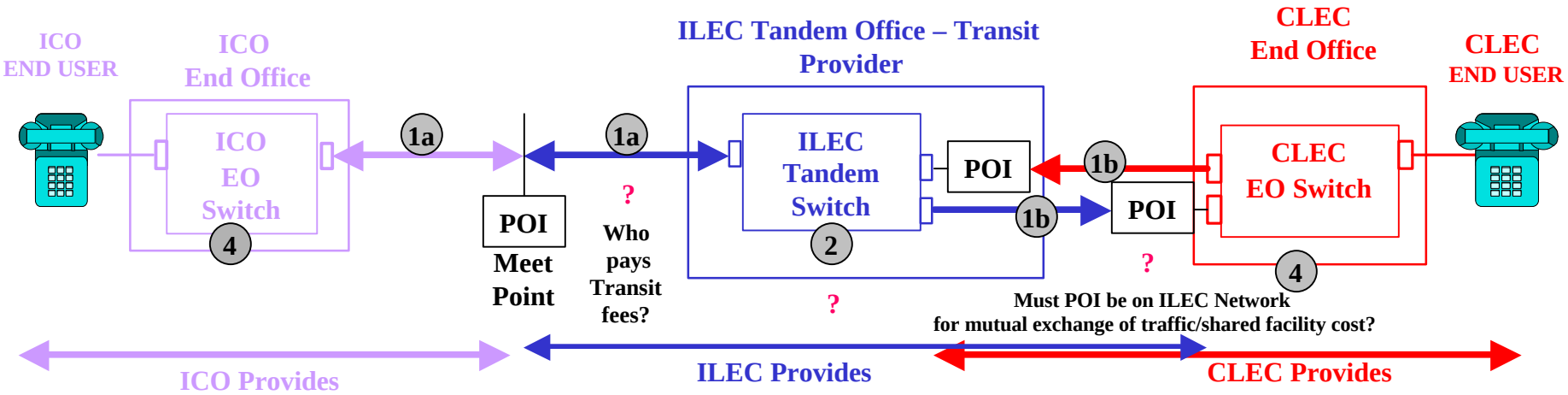

Financial Responsibility: The ILEC and ICO are responsible for facilities on their side of the POI or meet point. CPNP for transiting, transport and End Office switching.

Areas of Dispute: 1) ICOs dispute that they are obligated to pay for transiting of calls beyond the meet point because they believe the POI needs to be on the ICO's network (1a and 2); 2) Network Function 1b may be subject to dispute regarding both physical & financial responsibility. 3) ILEC tandem transit obligation/rate

		Originating from ICO		Originating from CLEC	
	NETWORK FUNCTION	**PAID BY**	**PAID TO**	**PAID BY**	**PAID TO**
1	Transport a) jointly provisioned b) dedicated	a) ICO b) ICO	a) ILEC* b) CLEC or ILEC	a) CLEC b) CLEC	a) ILEC & ICO b) CLEC or ILEC
2	Tandem Switching	ICO	ILEC	CLEC	ILEC
4	End Office Switching	ICO	CLEC	CLEC	ICO

* ICO will provide facilities to the meet point and ILEC will charge the ICO for facilities from meet point to the tandem.

Independent Company (ILEC Tandem Routed) & IXC

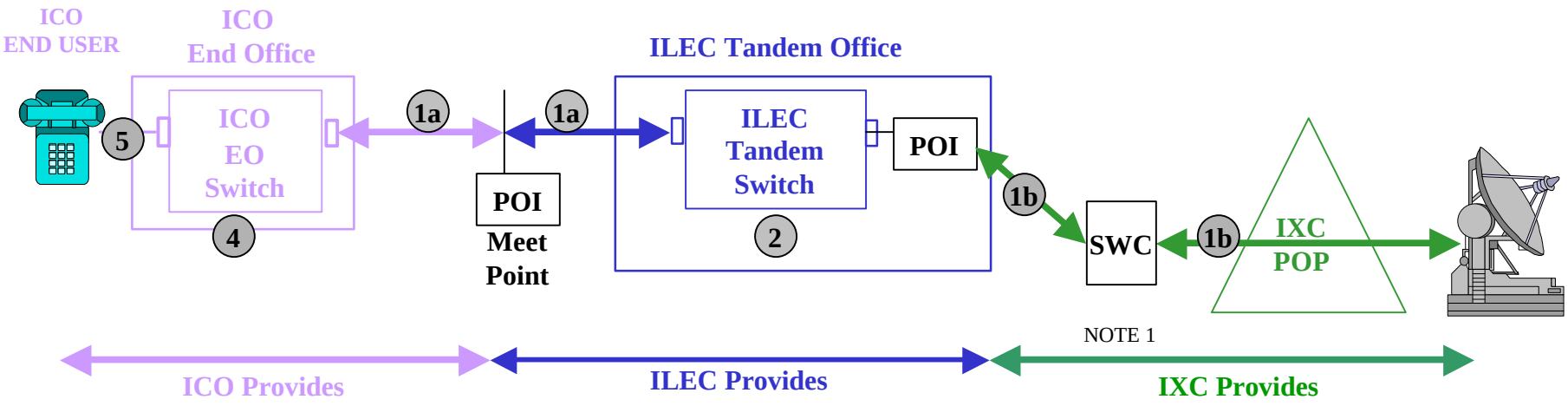

Financial Responsibility: Each company is responsible for facilities on its side of the POI or meet point. IXC is financially responsible for traffic in both directions from the ICO End User to the IXC POP. Rates vary widely by jurisdiction and widely varying ILEC local/long distance calling scopes.

For Both Directions of Traffic

	NETWORK FUNCTION	PAID BY	PAID TO
1	Transport a) jointly provisioned b) dedicated	a) IXC b) IXC*	a) ICO & ILEC b) Dedicated Transport Provider*
2	Tandem Switching	IXC	ILEC
4	End Office Switching	IXC	ICO
5	Common Line	IXC	ICO

* IXC may self-provision

Note 1 – The most typical arrangement is for the IXC to direct route to the ICO where traffic volumes warrant such direct connection.

Independent Company (ILEC Tandem Routed) & CMRS Provider (IntraMTA Traffic)

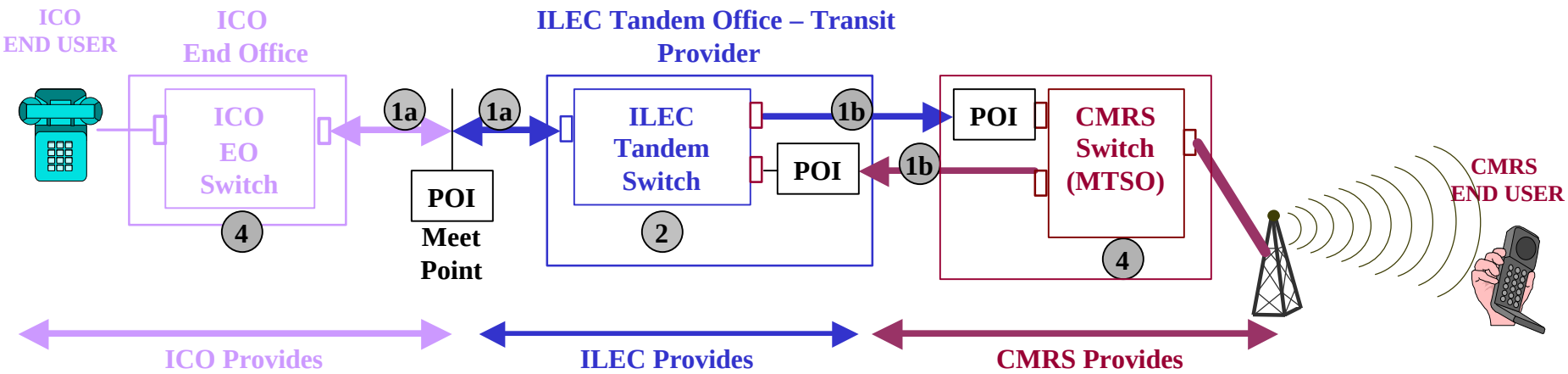

Financial Responsibility: Each company is responsible for facilities on its side of the POI or meet point. The financial responsibility is CPNP for IntraMTA traffic.

Areas of Dispute: 1) What traffic is subject to reciprocal compensation (IntraMTA rule)?; 2) Do access charges apply to CMRS providers?; 3) Who should pay for the transiting function provided by the ILEC (1a, 2)?; 4) ICOs dispute that they are obligated to pay for transiting of calls beyond the meet point; 5) Network Function 1b may be subject to dispute regarding physical & financial responsibility; 6) Disputes surrounding separate rating & routing points for NXXs;
7) Dispute over Section 51.711(a)(3) (application of the tandem rate rule); 8) ILEC tandem transit obligation / rate

		Originating from ICO		Originating from CMRS	
	NETWORK FUNCTION	**PAID BY**	**PAID TO**	**PAID BY**	**PAID TO**
1	Transport a) jointly provisioned b) dedicated	a) ICO b) ICO	a) ILEC b) CMRS or ILEC	a) CMRS b) CMRS*	a) ICO & ILEC b) CMRS or ILEC*
2	Tandem Switching	ICO	ILEC	CMRS	ILEC
4	Switching a) End Office b) MTSO Switching	b) ICO	b) CMRS	a) CMRS	a) ICO

*Typically, the ILEC will provision the facility and charge the CMRS provider based on the percent of the facility used.

Independent Company to CMRS Provider Routed via an IXC (IntraMTA Traffic)

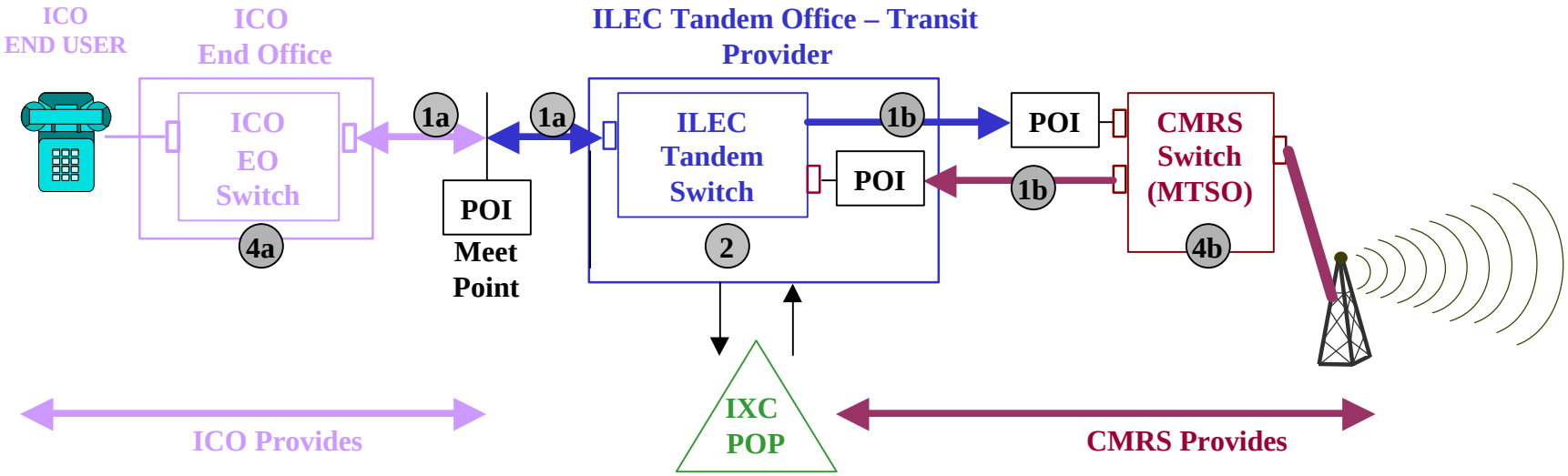

Areas of Dispute: 1) ICOs often contest any obligation to deliver traffic outside their exchange boundary. As a result, they will send traffic destined to a CMRS carrier via an IXC. In this circumstance, disputes arise over the appropriate compensation regime to be applied (access or reciprocal compensation) and which carrier bears financial responsibility for terminating the call, including transiting; 2) ILEC tandem transit obligation/rate

Originating from ICO

	NETWORK FUNCTION	PAID BY	PAID TO
1	Transport a) Jointly provisioned b) Dedicated	a) IXC b) IXC	a) ILEC & ICO b) ILEC or CMRS
2	Tandem Switching	IXC	ILEC
4	Switching a) End Office b) MTSO Switching	a) IXC b) Note 1	a) ICO b) Note 1

Note 1 – CMRS carriers receive no compensation from interconnecting carriers for MTSO switching.

CMRS Provider & ILEC (IntraMTA Traffic)

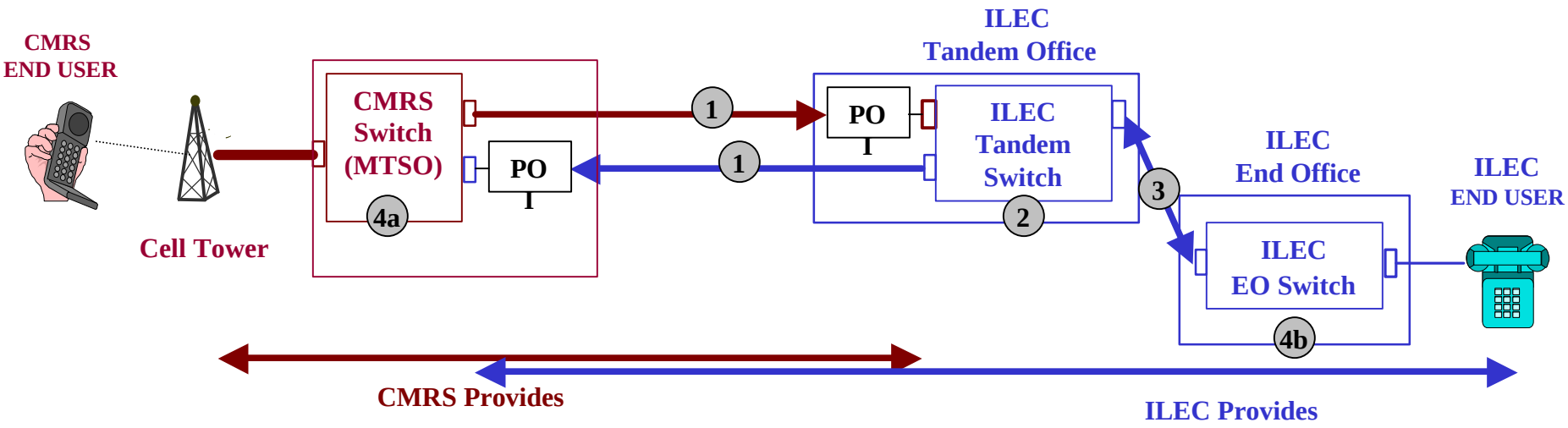

Financial Responsibility: CPNP for traffic originating and terminating within the same MTA.

Areas of Dispute: 1) When traffic originates on an ILEC network and terminates outside the ILEC local calling area, many anomalies and controversies exist; 2) Section 51.711(a)(3) (application of the tandem rate rule); 3) See slides 7 & 8 & 9 for additional areas of dispute.

		Originating from CMRS		Originating from ILEC	
	NETWORK FUNCTION	**PAID BY**	**PAID TO**	**PAID BY**	**PAID TO**
1	Transport	CMRS*	ILEC or CMRS*	ILEC*	CMRS or ILEC*
2	Tandem Switching	CMRS	ILEC	N/A	N/A
3	Common Transport	CMRS	ILEC	N/A	N/A
4	Switching a) MTSO Switching b) End Office	b) CMRS	b) ILEC	a) ILEC	a) CMRS

* Typically, the ILEC will provision the facility and charge the CMRS provider based on the percent of the facility used.

CMRS Provider & Other Carriers (CMRS & CLECs)

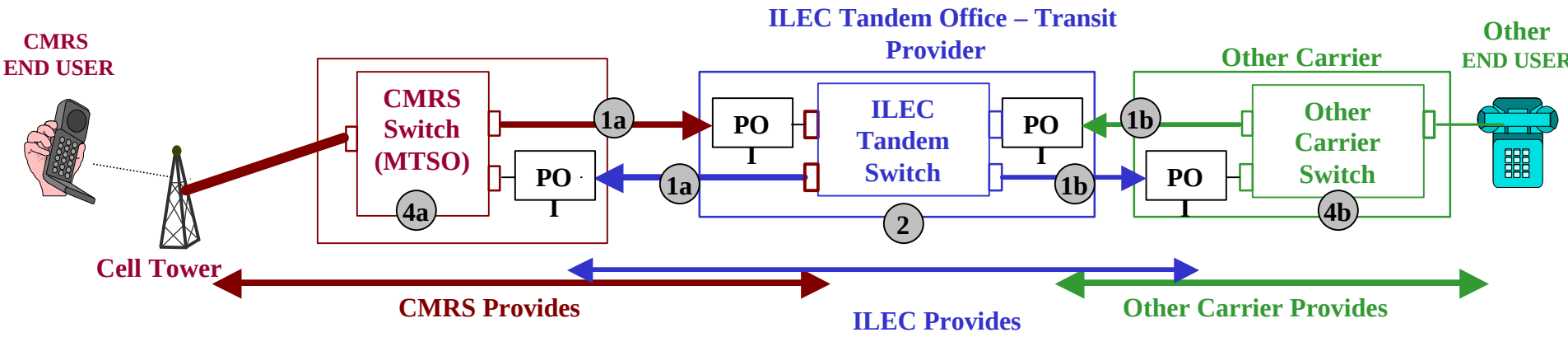

Financial Responsibility: CPNP for traffic subject to reciprocal compensation. Switching and transport (excluding ILEC switching and transport)is typically bill & keep.

Areas of Dispute: 1) What traffic is subject to reciprocal compensation (IntraMTA rule)?; 2) Network Function 1b may be subject to dispute regarding both physical & financial responsibility; 3) ILEC tandem transit obligation/rate

		Originating from CMRS			Originating from Other Carrier	
	NETWORK FUNCTION	**PAID BY**	**PAID TO**		**PAID BY**	**PAID TO**
1	Transport	a) CMRS* b) CMRS	a) ILEC or CMRS* b) OTHER or ILEC		a) OTHER b) OTHER	a) CMRS or ILEC* b) OTHER or ILEC
2	Tandem Switching	CMRS	ILEC		OTHER	ILEC
4	Switching a) MTSO Switching b) End Office	b) CMRS	b) OTHER		a) OTHER	a) CMRS

* Typically, the ILEC will provision the facility and charge the CMRS provider based on the percent of the facility used.

ICF Proposal Diagrams

The following slides depict interconnection and compensation under the ICF Plan

August 13, 2004

Network Diagrams

- These slides depict interconnection under the default network interconnection rules, including CRTC Transport implemented at start of Step 3.
- Only difference between intercarrier compensation at Steps 4-6 and Step 7 is in the payment for the terminating (End Office) Switching & Loop. At Steps 4-6, this is paid by interconnecting carrier (not transit provider) to the terminating carrier.
- Uniform termination rate, implemented at the start of Step 4:
  - .000175/Min. Steps 4 & 5
  - .0000875/Min. Step 6

ICF Plan Terminology: Direct Interconnection

(effective Step 3)

Basic Case – Between Two Non-CRTC Networks

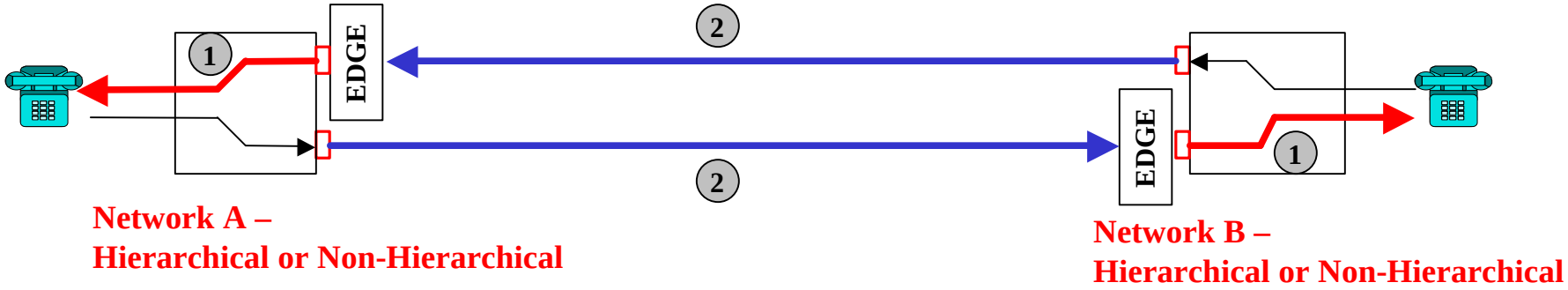

Between a CRTC Network and a Hierarchical or Non-Hierarchical Network

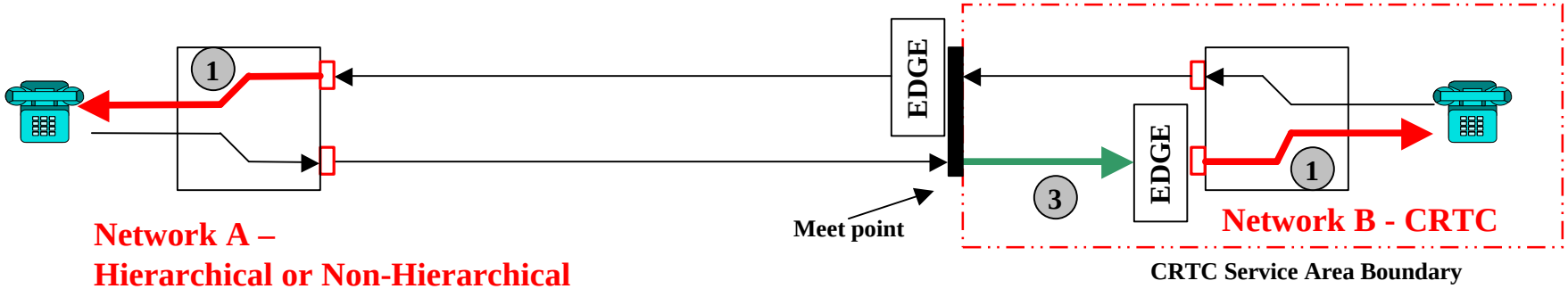

Legend:

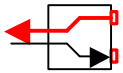

Switching and Intra-Network Transport

1 Termination (Steps 4-6)

2 Interconnection Transport

3 CRTC Terminating Transport

ICF Plan Terminology: Indirect Interconnection

(effective Step 3)

Basic Case – Between Two Non-Hierarchical Networks

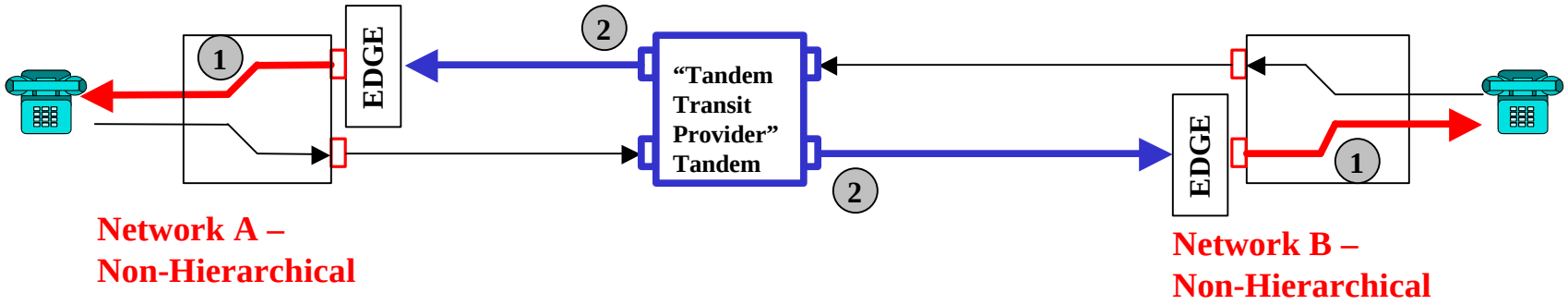

Between a Non-Hierarchical Network and a CRTC Network

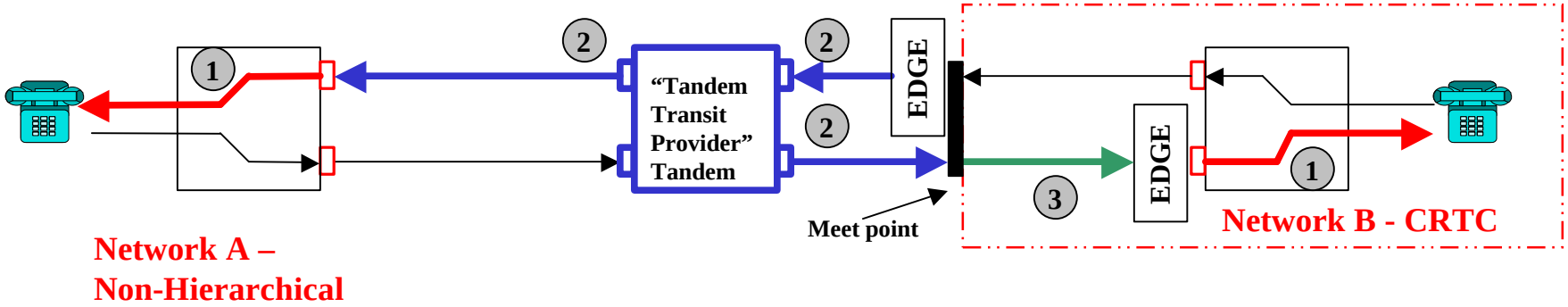

Legend:

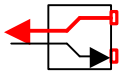

Switching and Intra-Network Transport

1 Termination (Steps 4-6)

2 Tandem Transit Service

3 CRTC Terminating Transport

IXC - ILEC Traffic – Tandem Routed
(Non-Hierarchical to Hierarchical)

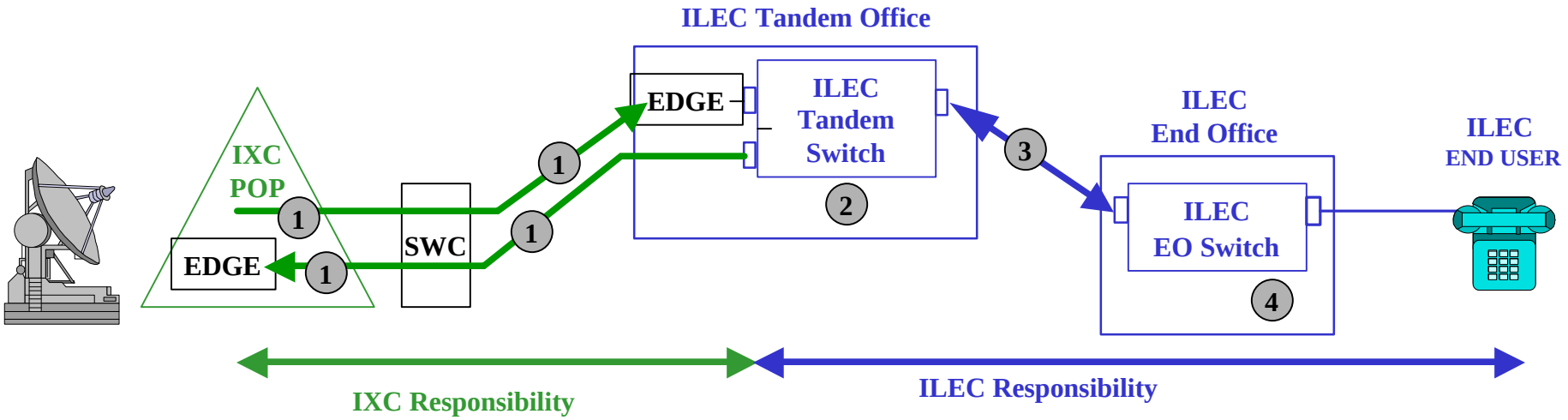

		Originating from IXC		Originating from ILEC	
	NETWORK FUNCTION	**PAID BY**	**PAID TO**	**PAID BY**	**PAID TO**
1	Interconnection Transport (Note 1)	IXC	Interconnection Transport Provider	IXC	Interconnection Transport Provider
2	Tandem Switching	ILEC	Bill and Keep	ILEC	Bill and Keep
3	Common Transport	ILEC	Bill and Keep	ILEC	Bill and Keep
4	End Office Switching and Loop	IXC (Step 4-6) ILEC (Step 7)	ILEC Bill and Keep	ILEC	Bill and Keep

Note 1: Interconnection Transport may be self-provisioned by the Non-Hierarchical Network, provisioned by a third party, or leased by the Non-Hierarchical Network from the Hierarchical Network at a 50% discount from the applicable interstate rate.

CLEC - ILEC Traffic
(Non-Hierarchical to Hierarchical)

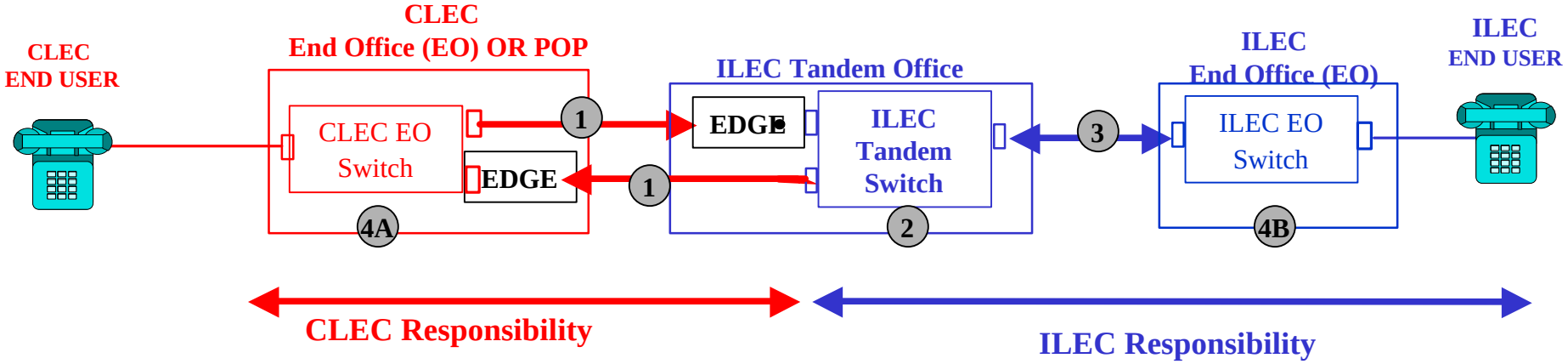

		Originating from CLEC		Originating from ILEC	
	NETWORK FUNCTION	**PAID BY**	**PAID TO**	**PAID BY**	**PAID TO**
1	Interconnection Transport (Note 1)	CLEC	Interconnection Transport Provider	CLEC	Interconnection Transport Provider
2	Tandem Switching	ILEC	Bill and Keep	ILEC	Bill and Keep
3	Common Transport	ILEC	Bill and Keep	ILEC	Bill and Keep
4	End Office Switching and Loop A	CLEC	Bill and Keep	ILEC (Step 4-6) CLEC (Step 7)	CLEC Bill and Keep
	B	CLEC (Step 4-6) ILEC (Step 7)	ILEC Bill and Keep	ILEC	Bill and Keep

Note 1: Interconnection Transport may be self-provisioned by the Non-Hierarchical Network, provisioned by a third party, or leased by the Non-Hierarchical Network from the Hierarchical Network at a 50% discount from the applicable interstate rate.

CMRS Carrier - ILEC Traffic
(Non-Hierarchical to Hierarchical)

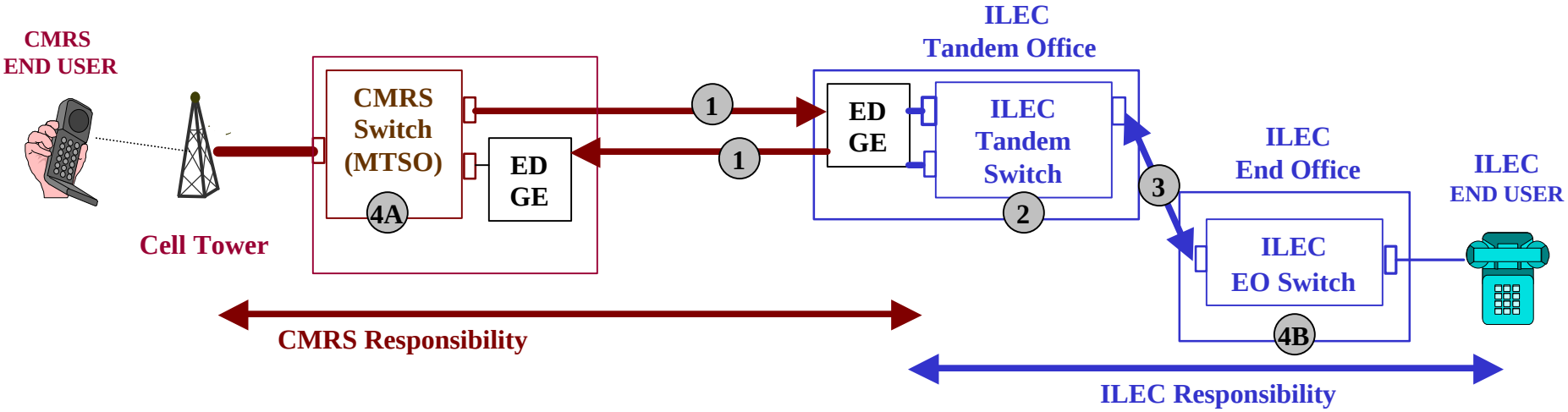

	NETWORK FUNCTION	Originating from CMRS: PAID BY	Originating from CMRS: PAID TO	Originating from ILEC: PAID BY	Originating from ILEC: PAID TO
1	Interconnection Transport (Note 1)	CMRS	Interconnection Transport Provider	CMRS	Interconnection Transport Provider
2	Tandem Switching	ILEC	Bill and Keep	ILEC	Bill and Keep
3	Common Transport	ILEC	Bill and Keep	ILEC	Bill and Keep
4	Switching and Loop A	CMRS	Bill and Keep	ILEC (Step 4-6) CMRS (Step 7)	CMRS Bill and Keep
	B	CMRS (Step 4-6) ILEC (Step 7)	ILEC Bill and Keep	ILEC	Bill and Keep

Note 1: Interconnection Transport may be self-provisioned by the Non-Hierarchical Network, provisioned by a third party, or leased by the Non-Hierarchical Network from the Hierarchical Network at a 50% discount from the applicable interstate rate.

ILEC - ILEC Traffic
(Hierarchical to Hierarchical)

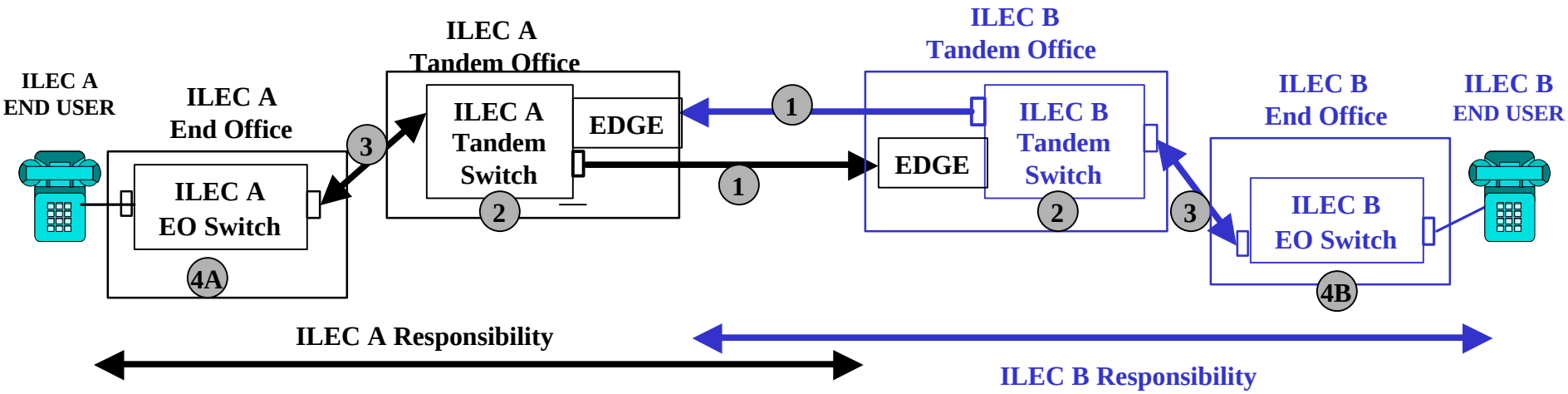

	NETWORK FUNCTION	Originating from ILEC A: PAID BY	Originating from ILEC A: PAID TO	Originating from ILEC B: PAID BY	Originating from ILEC B: PAID TO
1	Interconnection Transport	ILEC A	Interconnection Transport Provider	ILEC B	Interconnection Transport Provider
2	Tandem Switching	ILEC A	Bill and Keep	ILEC B	Bill and Keep
3	Common Transport	ILEC A	Bill and Keep	ILEC B	Bill and Keep
4	End Office Switching and Loop				
	A	ILEC A	Bill and Keep	ILEC B ILEC A	ILEC A Bill and Keep
	B	ILEC A ILEC B	ILEC B Bill and Keep	ILEC B	Bill and Keep

CLEC - CLEC Traffic w/ ILEC Transit
(Non-Hierarchical to Non-Hierarchical)

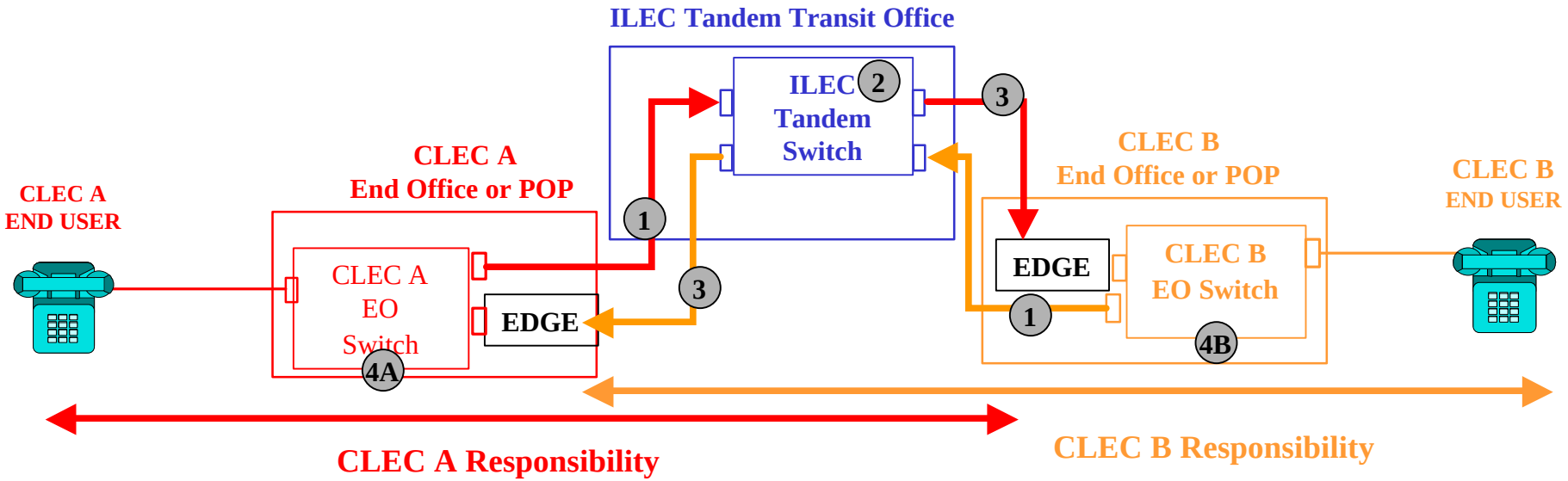

	NETWORK FUNCTION	PAID BY (Originating from CLEC A)	PAID TO (Originating from CLEC A)	PAID BY (Originating from CLEC B)	PAID TO (Originating from CLEC B)
1	Originating Transiting Transport (Note 1)	CLEC A	Transit Provider	CLEC B	Transit Provider
2	Tandem Switching	CLEC A	Transit Provider	CLEC B	Transit Provider
3	Terminating Transiting Transport (Note 2)	CLEC A	Transit Provider	CLEC B	Transit Provider
4	End Office Switching and Loop A	CLEC A	Bill and Keep	CLEC B (Step 4-6) CLEC A (Step 7)	CLEC A Bill and Keep
	B	CLEC A (Step 4-6) CLEC B (Step 7)	CLEC B Bill and Keep	CLEC B	Bill and Keep

Note 1: Originating Transiting Transport may be self-provisioned by the Non-hierarchical Network, provisioned by a third party, or leased by the Non-hierarchical Network from the Hierarchical Network at the applicable interstate rate.

Note 2: Tandem Transit provider may elect to use the facilities of the receiving carrier and credit/reimburse the receiving carrier.

CLEC - IXC Traffic w/ ILEC Transit

(Non-Hierarchical to Non-Hierarchical)

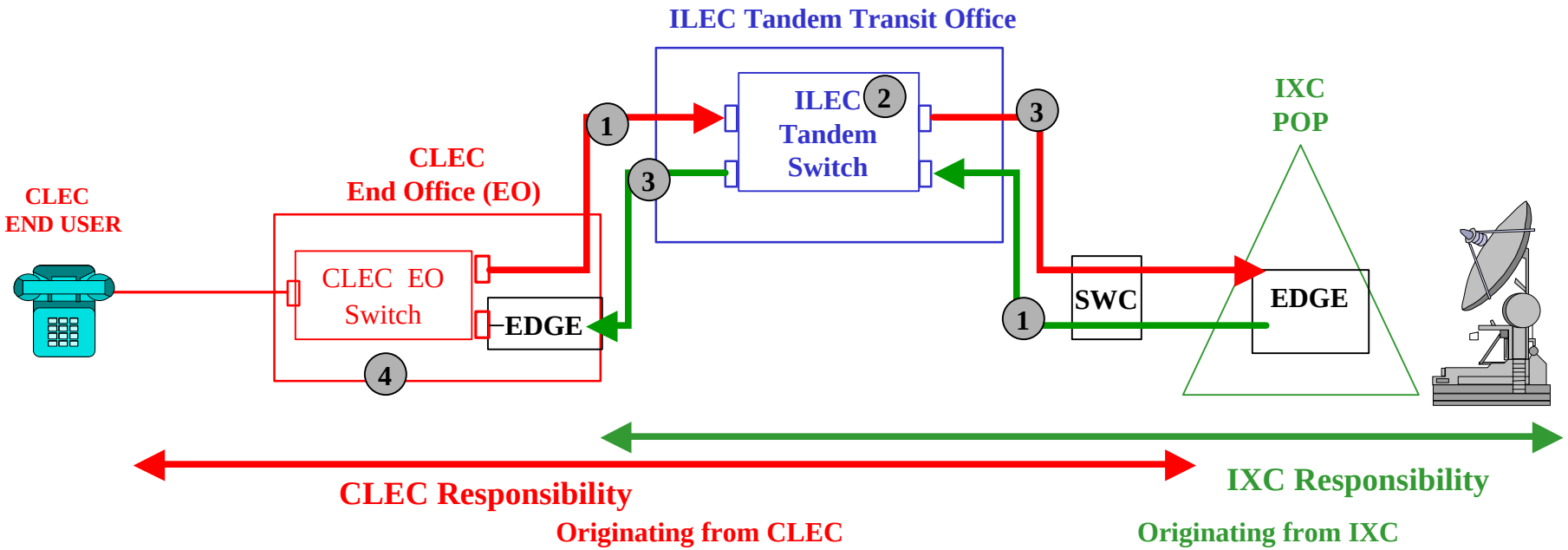

	NETWORK FUNCTION	PAID BY	PAID TO	PAID BY	PAID TO
1	Originating Transiting Transport (Note 1)	CLEC	Transit Provider	IXC	Transit Provider
2	Tandem Switching	CLEC	Transit Provider	IXC	Transit Provider
3	Terminating Transiting Transport (Note 2)	CLEC	Transit Provider	IXC	Transit Provider
4	End Office Switching and Loop	CLEC	Bill and Keep	IXC (Steps 4-6) CLEC (Step 7)	CLEC Bill and Keep

Note 1: Originating Transiting Transport may be self-provisioned by the Non-hierarchical Network, provisioned by a third party, or leased by the Non-hierarchical Network from the Hierarchical Network at the applicable interstate rate.

Note 2: Tandem transit provider may elect to use the facilities of the receiving carrier and credit/reimburse the receiving carrier.

CRTC - ILEC Traffic
(CRTC to Hierarchical)

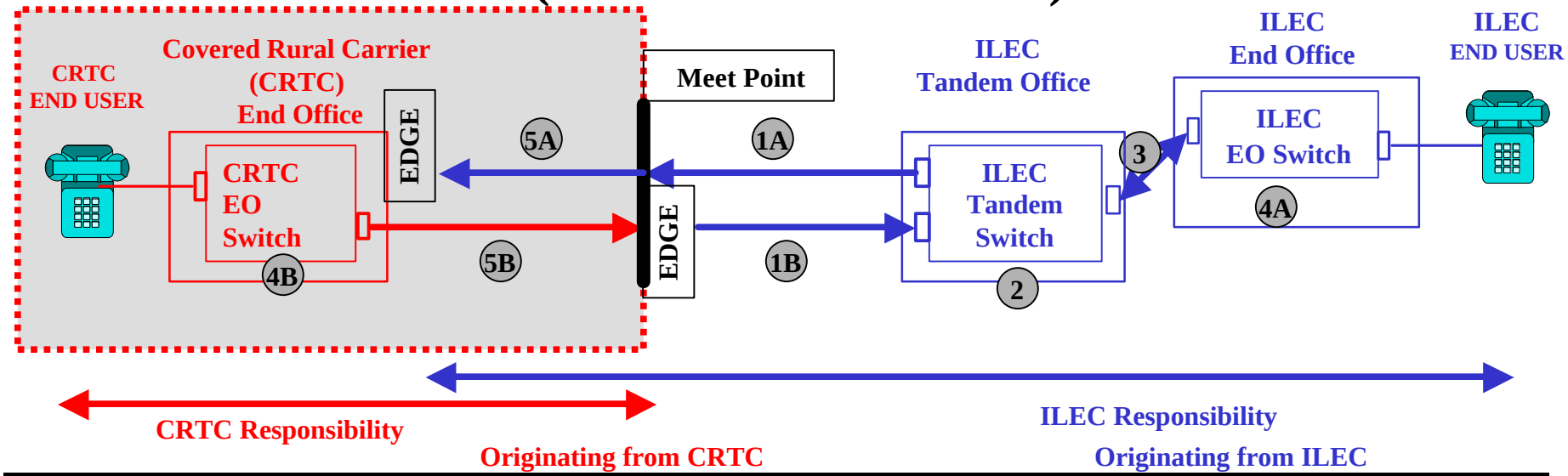

Originating from CRTC

Originating from ILEC

	NETWORK FUNCTION	PAID BY	PAID TO	PAID BY	PAID TO
1	Network Transport A	N/A	N/A	ILEC	Bill and Keep
	B	ILEC	Bill and Keep	N/A	N/A
2	Tandem Switching	ILEC	Bill and Keep	ILEC	Bill and Keep
3	Common Transport	ILEC	Bill and Keep	ILEC	Bill and Keep
4	End Office Switching and Loop A	CRTC (Steps 4-6) ILEC (Step 7)	ILEC Bill and Keep	ILEC	Bill and Keep
	B	CRTC	Bill and Keep	ILEC (Steps 4-6) CRTC (Step 7)	CRTC Bill and Keep
5	CRTC Transport A	N/A	N/A	ILEC	CRTC (note 2) (note 3)
	B	CRTC	Bill and Keep	N/A	N/A

Note 2: In the alternative to purchasing common terminating transport to this Edge from the CRTC, the ILEC also may purchase dedicated terminating transport from the CRTC at prescribed rates, e.g., DS-1's or DS-3's, purchase third-party transport, or deliver traffic using its own facilties.

Note 3: The Plan calls for the CRTC to bill a terminating transport rate to the originating network. The transit provider will provide the CRTC with billing records to allow the CRTC to bill the originating network. The terms and conditions under which these records will be provided are the subject of continuing discussion.

CRTC - CLEC Traffic w/ ILEC Transit
(CRTC to Non-Hierarchical)

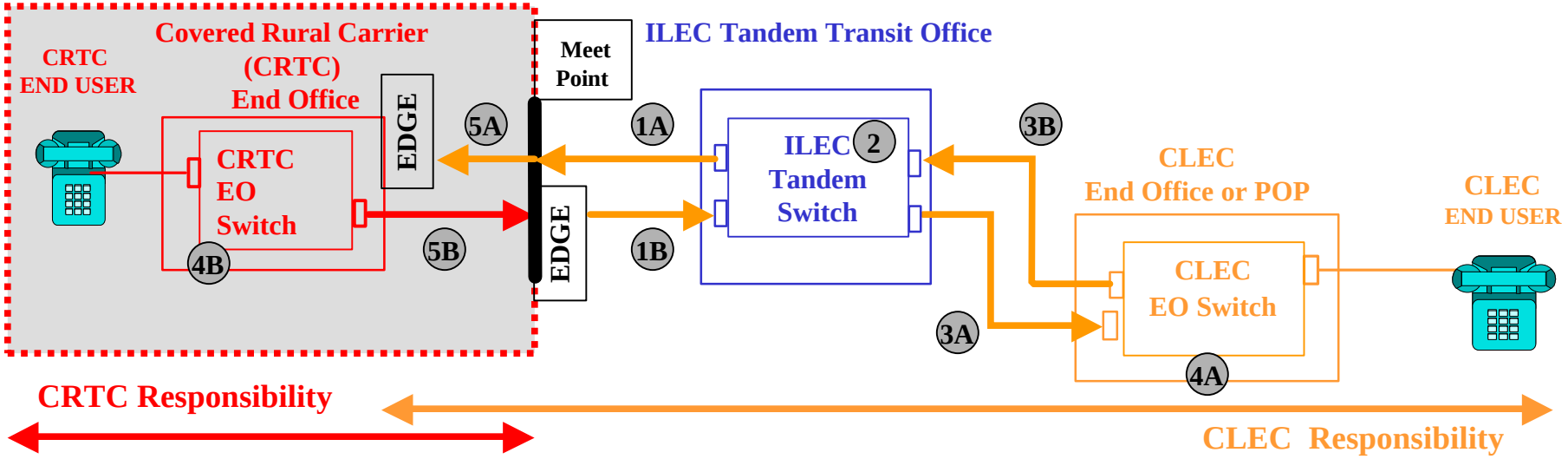

	NETWORK FUNCTION	Originating from CRTC: PAID BY	Originating from CRTC: PAID TO	Originating from CLEC: PAID BY	Originating from CLEC: PAID TO
1	Network Transport				
	A	N/A	N/A	CLEC	Transit Provider
	B	CLEC	Transit Provider	N/A	N/A
2	Tandem Switching	CLEC	Transit Provider	CLEC	Transit Provider
3	Common Transport				
	A	CLEC	Transit Provider	N/A	N/A
	B	N/A	N/A	CLEC	Transit Provider (Note 1)
4	End Office Switching and Loop				
	A	CRTC (Steps 4-6) CLEC (Step 7)	CLEC Bill and Keep	CLEC	Bill and Keep
	B	CRTC	Bill and Keep	CLEC (Steps 4-6) CRTC (Step 7)	CRTC Bill and Keep
5	CRTC Transport				
	A	N/A	N/A	CLEC	CRTC (Note 2)(Note 3)
	B	CRTC	Bill and Keep	N/A	N/A

Note 1: Originating Transiting Transport may be self-provisioned by the Non-Hierarchical Network, provisioned by a third party or leased by the Non-Hierarchical Network from the Hierarchical Network at the applicable interstate rate.

Note 2: In the alternative to purchasing common terminating transport to this Edge from the CRTC, the CLEC also may purchase dedicated terminating transport from the CRTC at prescribed rates, e.g., DS-1's or DS-3's, purchase third-party transport, or deliver traffic using its own facilities.

Note 3: The Plan calls for the CRTC to bill a terminating transport rate to the originating network. The transit provider will provide the CRTC with billing records to allow the CRTC to bill the originating network. The terms and conditions under which the billing records will be provided are the subject of ongoing discussions.

CRTC - CRTC w/ ILEC Transit

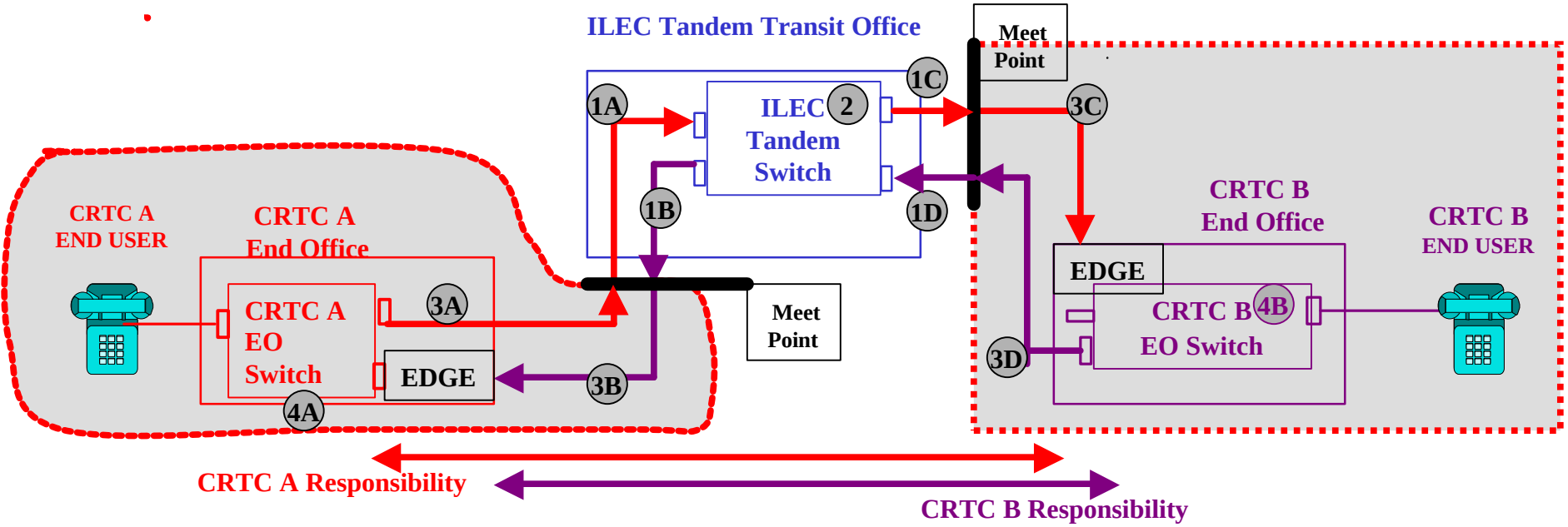

	NETWORK FUNCTION	Originating from CRTC A: PAID BY	Originating from CRTC A: PAID TO	Originating from CRTC B: PAID BY	Originating from CRTC B: PAID TO
1	Transiting Transport				
	A	CRTC A	Transit Provider (Note 1)	N/A	N/A
	B	N/A	N/A	CRTC B	Transit Provider
	C	CRTC A	Transit Provider	N/A	N/A
	D	N/A	N/A	CRTC B	Transit Provider (Note 1)
2	Tandem Switching	CRTC A	Transit Provider	CRTC B	Transit Provider
3	CRTC Transport				
	A	CRTC A	Bill and Keep	N/A	N/A
	B	N/A	N/A	CRTC B	CRTC A (Note 2) (Note 3)
	C	CRTC A	CRTC B (Note 2) (Note 3)	N/A	N/A
	D	N/A	N/A	CRTC B	Bill and Keep
4	End Office Switching and Loop				
	A	CRTC A	Bill and Keep	CRTC B (Steps 4-6) CRTC A (Step 7)	CRTC A Bill and Keep
	B	CRTC A (Steps 4-6) CRTC B (Step 7)	CRTC B Bill and Keep	CRTC B	Bill and Keep

Note 1: Originating Transiting Transport may be self-provisioned by the Non-Hierarchical Network, provisioned by a third party or leased by the Non-Hierarchical Network from the Hierarchical Network at the applicable interstate rate.

Note 2: In the alternative to purchasing terminating common transport to this Edge from the recipient CRTC, the oriinating CRTC may purchase terminating dedicated transport from the terminating CRTC at prescribed rates, e.g., DS-1's or DS-3's, purchase third-party transport, or deliver traffic using its own facilties.

Note 3: The Plan calls for the CRTC to bill a terminating transport rate to the originating network. The transit provider will provide the CRTC with billing records to allow the CRTC to bill the originating network. The terms and conditions under which these records will be provided are the subject of continuing discussions.

CMRS Carrier - CRTC w/ ILEC Transit

(Non-Hierarchical to CRTC)

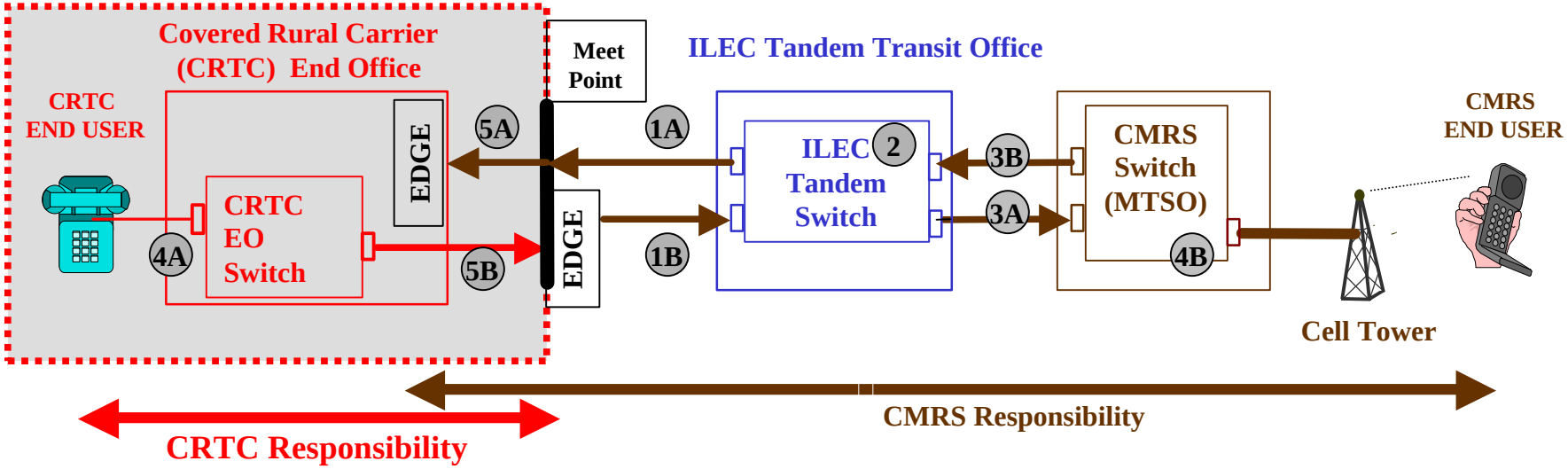

	NETWORK FUNCTION	PAID BY (Originating from CRTC)	PAID TO (Originating from CRTC)	PAID BY (Originating from CMRS)	PAID TO (Originating from CMRS)
1	Network Transport A	N/A	N/A	CMRS	Transit Provider
	B	CMRS	Transit Provider	N/A	N/A
2	Tandem Switching	CMRS	Transit Provider	CMRS	Transit Provider
3	Common Transport A	CMRS	Transit Provider	N/A	N/A
	B	N/A	N/A	CMRS	Transit Provider (Note 1)
4	End Office Switching and Loop A	CRTC	Bill and Keep	CMRS (Steps 4-6) CRTC (Step 7)	CRTC Bill and Keep
	B	CRTC (Steps 4-6) CMRS (Step 7)	CMRS Bill and Keep	CRTC B	Bill and Keep
5	CRTC Transport A	N/A	N/A	CMRS	CRTC (Note 2) (Note 3)
	B	CRTC	Bill and Keep	N/A	N/A

Note 1: Originating Transiting Transport may be self-provisioned by the Non-Hierarchical Network, provisioned by a third party or leased by the Non-Hierarchical Network from the Hierarchical Network at the applicable interstate rate.

Note 2: In the alternative to purchasing common terminating transport to this Edge from the CRTC, the CMRS Provider also may purchase dedicated terminating transport from the CRTC at prescribed rates, e.g., DS-1's or DS-3's, purchase third-party transport, or deliver traffic using its own facilities.

Note 3: The Plan calls for the CRTC to bill a terminating transport rate to the originating network. The transit provider will provide the CRTC with billing records to allow the CRTC to bill the originating network. The terms and conditions under which the transit provider will provide the CRTC with such records are to be determined.

CLEC to CRTC

Where the CLEC is in CRTC Territory

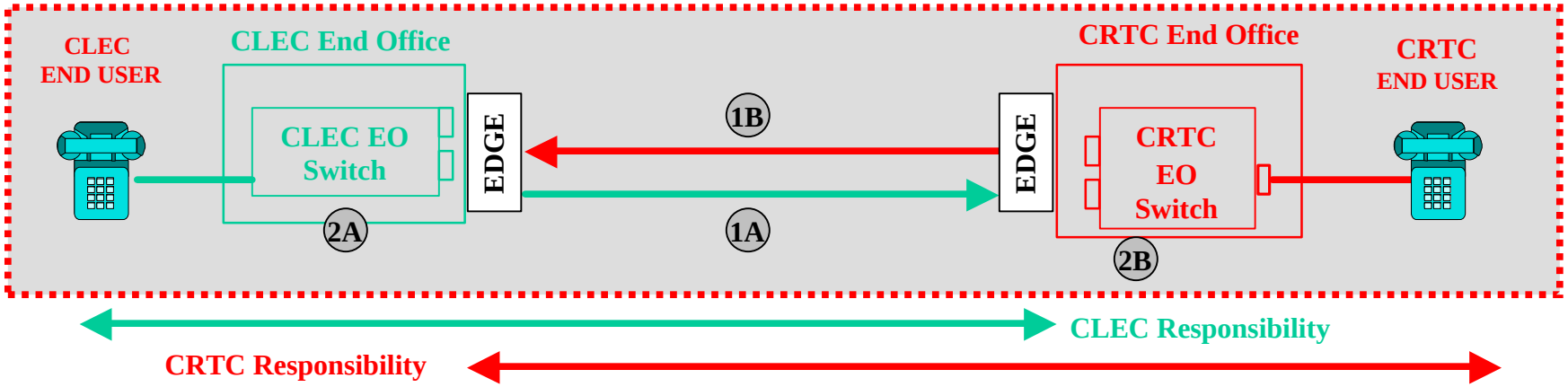

		Originating from CLEC		Originating from CRTC	
	NETWORK FUNCTION	PAID BY	PAID TO	PAID BY	PAID TO
1	Interconnection Transport A	CLEC	Bill and Keep	N/A	N/A
	B	N/A	N/A	CRTC	Bill and Keep
2	End Office Switching and Loop A	CLEC	Bill and Keep	CRTC (Steps 4-6) CLEC (Step 7)	CLEC Bill and Keep
	B	CLEC (Steps 4-6) CRTC (Step 7)	CRTC Bill and Keep	CRTC	Bill and Keep

CLEC - CRTC w/ ILEC Transit

Where the CLEC is in CRTC Territory

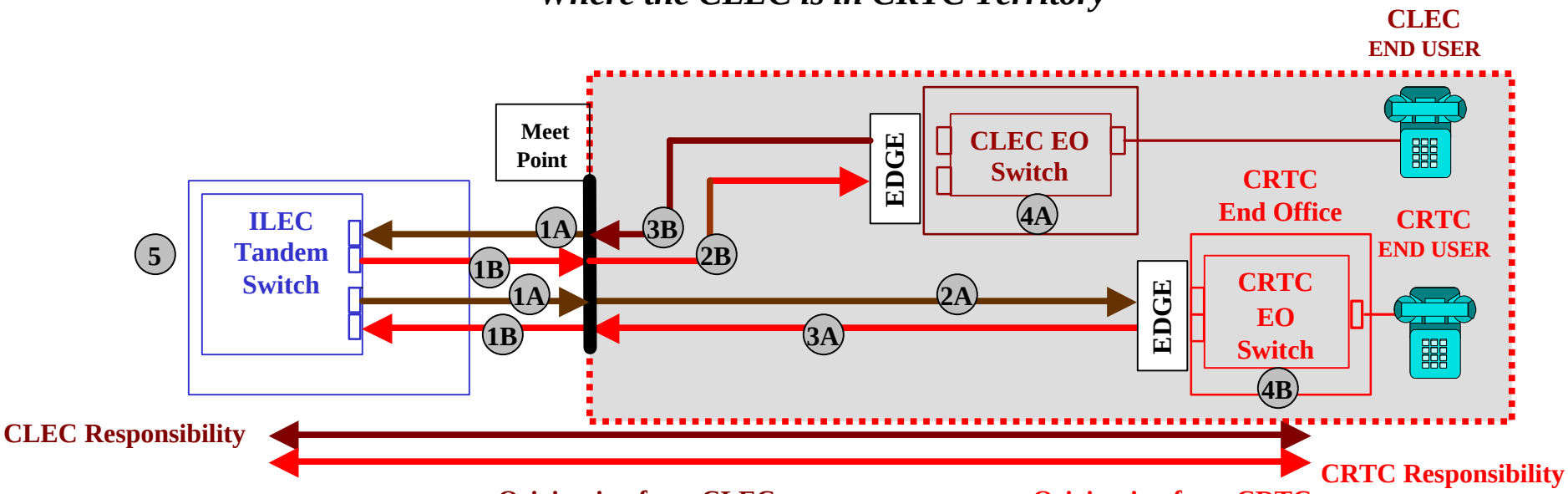

	NETWORK FUNCTION	Originating from CLEC: PAID BY	Originating from CLEC: PAID TO	Originating from CRTC: PAID BY	Originating from CRTC: PAID TO
1	Transiting Transport				
	A	CLEC	Transit Provider	N/A	N/A
	B	N/A	N/A	CRTC	Transit Provider
2	CRTC Transport				
	A	CLEC	CRTC (Note 2) (Note 3)	N/A	N/A
	B	N/A	N/A	CRTC	CLEC (Note 1)
3	Network Transport				
	A	N/A	N/A	CRTC	Bill and Keep
	B	CLEC	Bil and Keep (Note 1)	N/A	N/A
4	End Office Switching and Loop				
	A	CLEC	Bill and Keep	CRTC (Steps 4-6) CLEC (Step 7)	CLEC Bill and Keep
	B	CLEC (Steps 4-6) CRTC (Step 7)	CRTC Bill and Keep	CRTC	Bill and Keep
5	Tandem Switching	CLEC	Transit Provider	CRTC	Transit Provider

Note 1: Originating Transiting Transport may be self-provisioned by the Non-Hierarchical Network, provisioned by a third party or leased by the Non-Hierarchical Network from the Hierarchical Network at the applicable interstate rate.

Note 2: In the alternative to purchasing common terminating transport to this Edge from the CRTC, the CLEC also may purchase dedicated terminating transport from the CRTC at prescribed rates, e.g., DS-1's or DS-3's, purchase third-party transport, or deliver traffic using its own facilities.

Note 3: The Plan calls for the CRTC to bill a terminating transport rate to the originating network. The transit provider will provide the CRTC with billing records to allow the CRTC to bill the originating network. The terms and conditions under which the transit provider will provide the CRTC with such records are to be determined.

CLEC in CRTC area - CLEC out of CRTC area w/ ILEC Transit

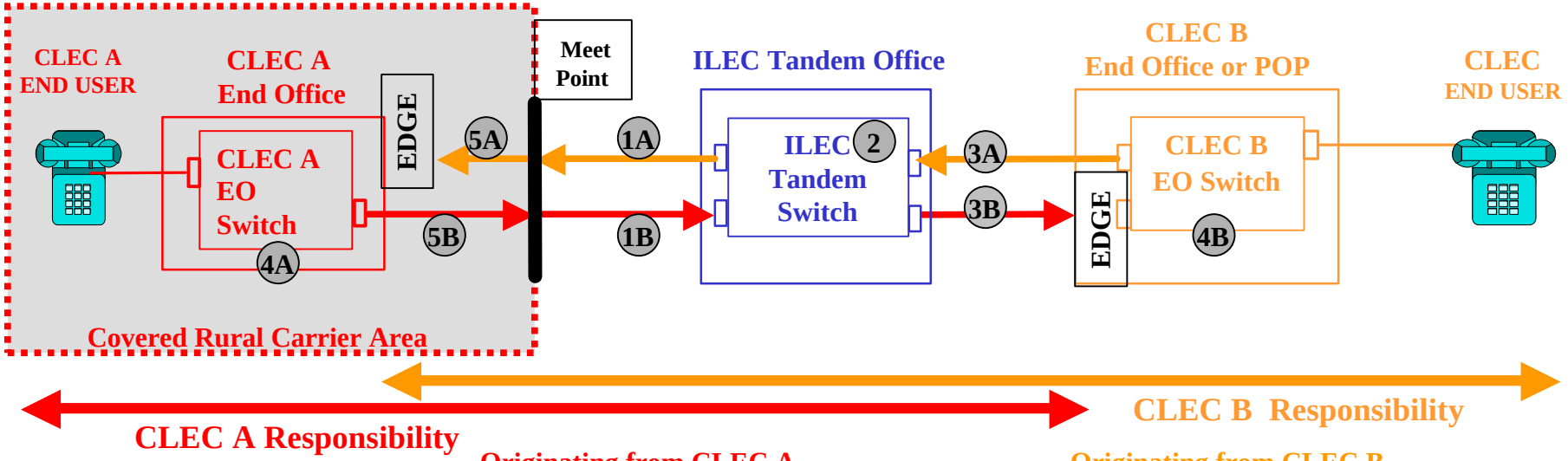

	NETWORK FUNCTION	Originating from CLEC A: PAID BY	Originating from CLEC A: PAID TO	Originating from CLEC B: PAID BY	Originating from CLEC B: PAID TO
1	Transiting Transport				
	A	N/A	N/A	N/A	N/A
	B	CLEC A	Transit Provider	N/A	N/A
2	Tandem Switching	CLEC A	Transit Provider	CLEC B	Transit Provider
3	Transiting Transport				
	A	N/A	N/A	CLEC B	Transit Provider (note 1)
	B	CLEC A	Transit Provider	N/A	N/A
4	End Office Switching and Loop				
	A	CLEC A	Bill and Keep	CLEC B (Steps 4-6) CLEC A (Step 7)	CLEC A Bill and Keep
	B	CLEC A (Steps 4-6) CLEC B (Step 7)	CLEC B Bill and Keep	CLEC B	Bill and Keep
5	CLEC Transport				
	A	N/A	N/A	CLEC B	CLEC A (Note 2) (Note 3) (Note 4)
	B	CLEC A	Bill and Keep	N/A	N/A

Note 1: Originating Transiting Transport may be self-provisioned by the Non-Hierarchical Network, provisioned by a third party or leased by the Non-Hierarchical Network from the Hierarchical Network at the applicable interstate rate.

Note 2: In the alternative to purchasing terminating common transport to this Edge from the recipient CLEC, the originating CLEC may purchase terminating dedicated transport from the terminating CLEC at prescribed rates, e.g., DS-1's or DS-3's, purchase third-party transport, or deliver traffic using its own facilties.

Note 3: The Plan calls for the originating CLEC to deliver traffic it originates to the terminating CLEC's Edge. If the originating CLEC uses a tandem transit provider and the terminating CLEC's terminating transport to do so, then the tandem transit provider will provide the terminating CLEC with billing records to allow the terminating CLEC to bill the originating network. The terms and conditions under which these records will be provided are the subject of continuing discussion.

Note 4: The rate for terminating transport is capped at the CRTC transport rate for the same function.