Exhibit 1

Antennas

Antennacraft Antennas

Engineering Specifications

ANTENNACRAFT®
Model HD1850 Heavy-Duty, High-Definition VHF/UHF/FM Antenna

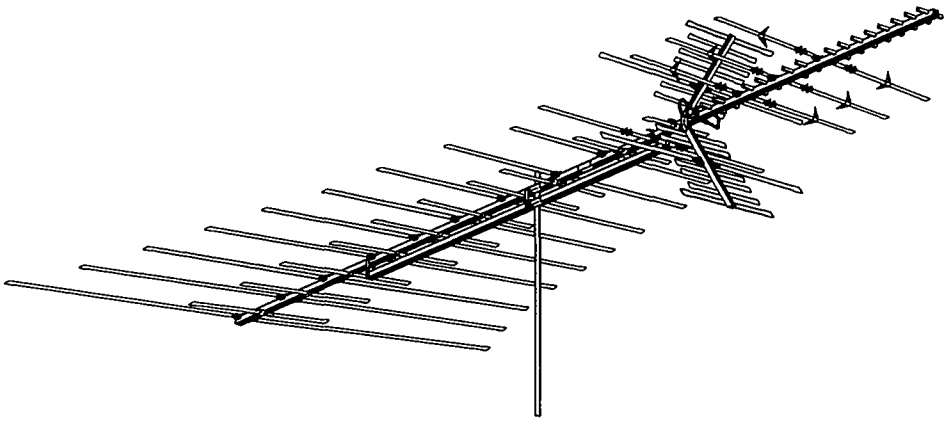

Model Number:	HD-1850

General:	
Channels	2 - 69
Electronic Elements	84
Output Impedance	300 ohms

Physical:	
Boom Length	180"
Maximum Width	112"
Vertical Height	38"
Turning Radius	102"
Element Diameter	.375"
Shipping Weight	16.0
Carton Dimensions	7" x 9" x 98"

Performance:	
1 Gain (dB)	
VHF Low Band	6.2
VHF High Band	10.7
UHF Band	10.0
2 Half-Power Beamwidth (deg.)	
VHF Low Band	65.0
VHF High Band	34.0
UHF Band	37.5
3 Front-To-Back Ratio (dB)	
VHF Low Band	20.2
VHF High Band	17.3
UHF Band	13.7

1: Over Half-Wave Tuned Dipole (Ch. 2 - 62)

2: -3 dB Down Points

3: Opposite Hemisphere

Antennacraft, P.O. Box 1005, Burlington, IA 52601

Engineering Specifications

ANTENNACRAFT®
Model HD1800 Heavy-Duty, High-Definition VHF/UHF/FM Antenna

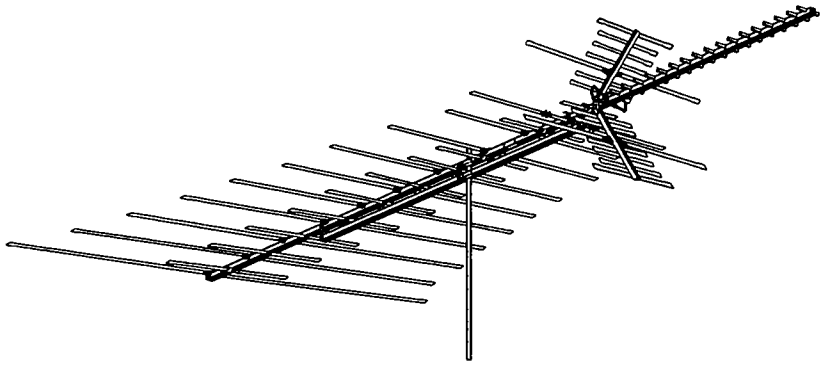

Model Number:	HD-1800

General:	
Channels	2 - 69
Electronic Elements	69
Output Impedance	300 ohms

Physical:	
Boom Length	180"
Maximum Width	112"
Vertical Height	38"
Turning Radius	102"
Element Diameter	.375"
Shipping Weight	15.0
Carton Dimensions	7" x 9" x 98"

Performance:	
1 Gain (dB)	
VHF Low Band	6.2
VHF High Band	9.4
UHF Band	10.0
2 Half-Power Beamwidth (deg.)	
VHF Low Band	65.0
VHF High Band	35.5
UHF Band	37.5
3 Front-To-Back Ratio (dB)	
VHF Low Band	20.2
VHF High Band	17.3
UHF Band	13.7

1: Over Half-Wave Tuned Dipole (Ch. 2 - 62)

2: -3 dB Down Points

3: Opposite Hemisphere

Antennacraft, P.O. Box 1005, Burlington, IA 52601

Engineering Specifications

ANTENNACRAFT®
Model HD1200 Heavy-Duty, High-Definition VHF/UHF/FM Antenna

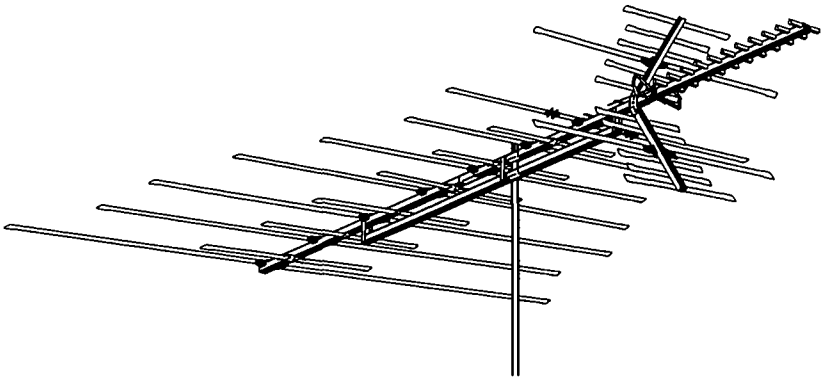

Model Number:	HD-1200

General:	
Channels	2 - 69
Electronic Elements	51
Output Impedance	300 ohms

Physical:	
Boom Length	120"
Maximum Width	109"
Vertical Height	31"
Turning Radius	78"
Element Diameter	.375"
Shipping Weight	12.0
Carton Dimensions	6.5" x 6.75" x 101"

Performance:	
1 Gain (dB)	
VHF Low Band	5.1
VHF High Band	8.0
UHF Band	8.5
2 Half-Power Beamwidth (deg.)	
VHF Low Band	67.0
VHF High Band	33.0
UHF Band	39.0
3 Front-To-Back Ratio (dB)	
VHF Low Band	16.5
VHF High Band	14.0
UHF Band	13.5

1: Over Half-Wave Tuned Dipole (Ch. 2 - 82)

2: -3 dB Down Points

3: Opposite Hemisphere

Engineering Specifications

ANTENNACRAFT®

Model HD850 Heavy-Duty, High-Definition VHF/UHF/FM Antenna

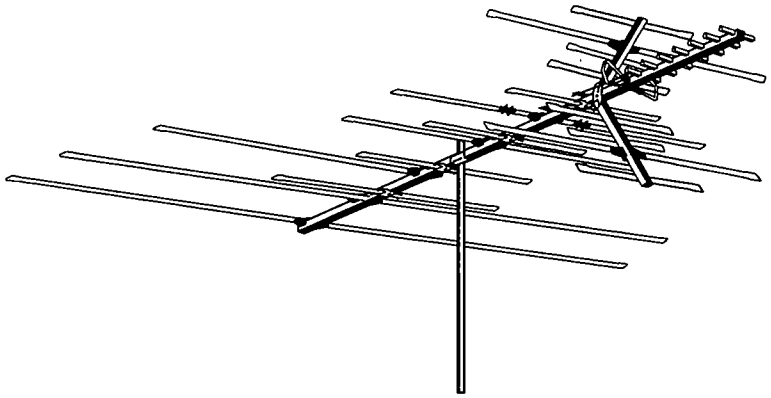

Model Number:	HD-850

General:

Channels	2 - 69
Electronic Elements	36
Output Impedance	300 ohms

Physical:

Boom Length	85"
Maximum Width	111"
Vertical Height	24"
Turning Radius	64"
Element Diameter	.375"
Shipping Weight	9.0
Carton Dimensions	6.5" x 6.75" x 101"

Performance:

[1] Gain (dB)	
VHF Low Band	3.3
VHF High Band	6.9
UHF Band	7.7
[2] Half-Power Beamwidth (deg.)	
VHF Low Band	72.0
VHF High Band	36.0
UHF Band	40.0
[3] Front-To-Back Ratio (dB)	
VHF Low Band	11.0
VHF High Band	13.0
UHF Band	12.0

1: Over Half-Wave Tuned Dipole (Ch. 2 - 62)

2: -3 dB Down Points

3: Opposite Hemisphere

Antennacraft, P.O. Box 1005, Burlington, IA 52601

Engineering Specifications

ANTENNACRAFT®

Model D9000 UHF/VHF/FM Antenna

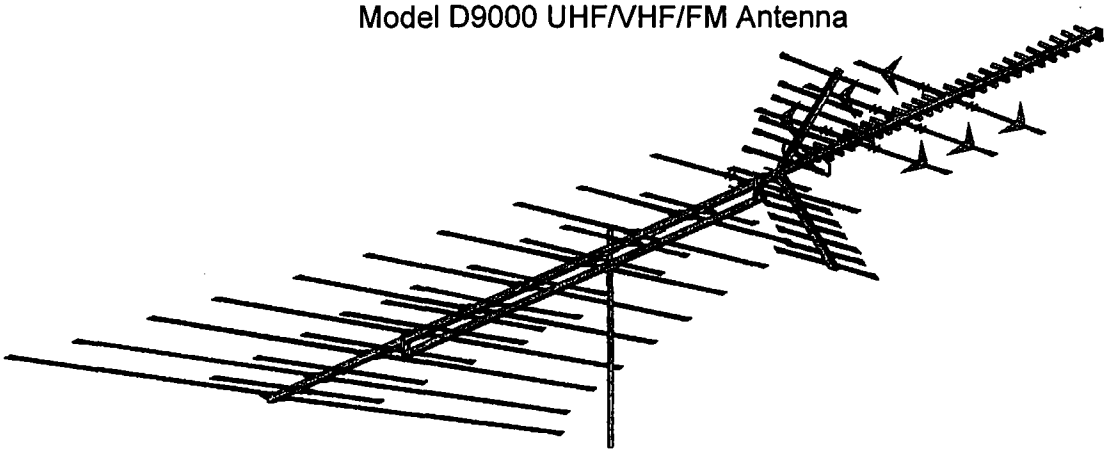

Model Number:	D-9000

General:

Channels	2 - 69
Electronic Elements	91
Output Impedance	300 ohms

Physical:

Boom Length	180"
Maximum Width	112"
Vertical Height	38"
Turning Radius	101.5"
Element Diameter	.375"
Shipping Weight	14.5 lbs.
Carton Dimensions	7" x 8.25" x 101"

Performance:

[1] Gain (dB)	
VHF Low Band	6.0
VHF High Band	9.8
UHF Band	9.9
[2] Half-Power Beamwidth (deg.)	
VHF Low Band	67.0
VHF High Band	35.5
UHF Band	37.5
[3] Front-To-Back Ratio (dB)	
VHF Low Band	20.2
VHF High Band	17.3
UHF Band	13.7

1: Over Half-Wave Tuned Dipole (Ch. 2 - 62)

2: -3 dB Down Points

3: Opposite Hemisphere

Engineering Specifications

ANTENNACRAFT®

Model 4BG30 Permacolor® UHF/VHF/FM

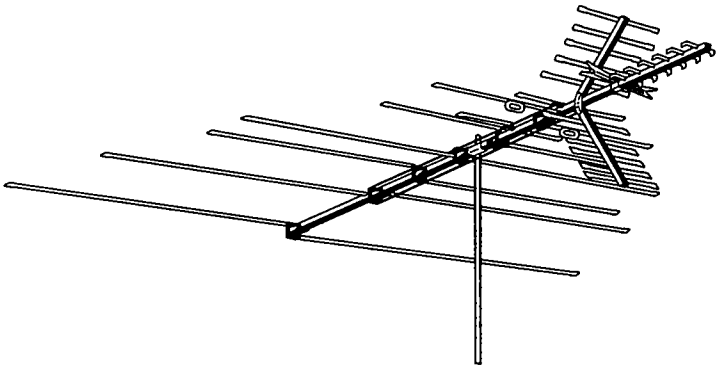

Model Number: 4BG30

General:

Channels	2 - 69
Electronic Elements	31
Output Impedance	300 ohms

Physical:

Boom Length	106"
Maximum Width	108"
Vertical Height	36"
Turning Radius	75"
Element Diameter	.375"
Shipping Weight	8.5 lbs.
Carton Dimensions	5" x 5.25" x 108"

Performance:

[1] Gain (dB)	
VHF Low Band	3.9
VHF High Band	7.5
UHF Band	7.0
[2] Half-Power Beamwidth (deg.)	
VHF Low Band	71.0
VHF High Band	46.0
UHF Band	44.0
[3] Front-To-Back Ratio (dB)	
VHF Low Band	13.6
VHF High Band	12.9
UHF Band	16.0

1: Over Half-Wave Tuned Dipole (Ch. 2 - 62)

2: -3 dB Down Points

3: Opposite Hemisphere

Antennacraft, P.O. Box 1005, Burlington, IA 52601

Engineering Specifications

ANTENNACRAFT®
Model 4BG26 Permacolor® UHF/VHF/FM

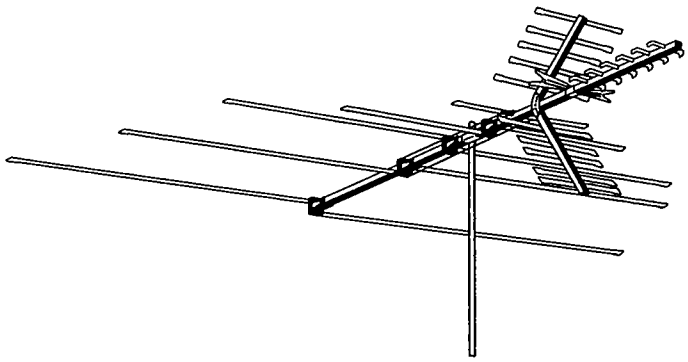

Model Number:	4BG26

General:	
Channels	2 - 69
Electronic Elements	27
Output Impedance	300 ohms

Physical:	
Boom Length	91"
Maximum Width	108"
Vertical Height	36"
Turning Radius	68"
Element Diameter	.375"
Shipping Weight	7.1 lbs.
Carton Dimensions	5" x 5.25" x 103"

Performance:	
1 Gain (dB)	
VHF Low Band	3.6
VHF High Band	5.6
UHF Band	7.0
2 Half-Power Beamwidth (deg.)	
VHF Low Band	73.3
VHF High Band	49.0
UHF Band	53.4
3 Front-To-Back Ratio (dB)	
VHF Low Band	9.3
VHF High Band	10.4
UHF Band	14.3

1: Over Half-Wave Tuned Dipole (Ch. 2 - 62)

2: -3 dB Down Points

3: Opposite Hemisphere

Antennacraft, P.O. Box 1005, Burlington, IA 52601

Engineering Specifications

ANTENNACRAFT®
Model 4BG20 Permacolor® UHF/VHF/FM

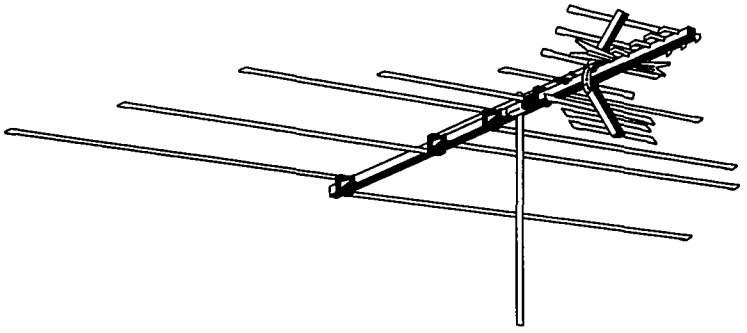

Model Number:	4BG20

General:

Channels	2 - 69
Electronic Elements	21
Output Impedance	300 ohms

Physical:

Boom Length	81"
Maximum Width	108"
Vertical Height	20"
Turning Radius	68"
Element Diameter	.375"
Shipping Weight	6.0 lbs.
Carton Dimensions	6 x 4.75 x 81"

Performance:

1	Gain (dB)	
	VHF Low Band	3.5
	VHF High Band	3.9
	UHF Band	6.1
2	Half-Power Beamwidth (deg.)	
	VHF Low Band	70.3
	VHF High Band	52.0
	UHF Band	52.2
3	Front-To-Back Ratio (dB)	
	VHF Low Band	9.3
	VHF High Band	10.4
	UHF Band	13.8

1: Over Half-Wave Tuned Dipole (Ch. 2 - 62)

2: -3 dB Down Points

3: Opposite Hemisphere

Antennacraft, P.O. Box 1005, Burlington, IA 52601

Engineering Specifications

ANTENNACRAFT®
Model 4BG18 Permacolor® UHF/VHF/FM

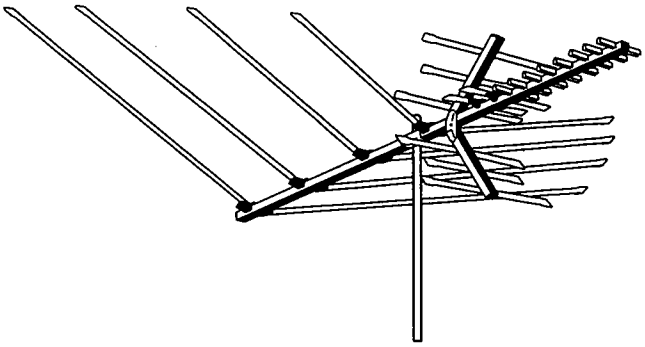

Model Number:	4BG18

General:	
Channels	2 - 69
Electronic Elements	19
Output Impedance	300 ohms

Physical:	
Boom Length	71"
Maximum Width	96"
Vertical Height	25"
Turning Radius	50"
Element Diameter	.375"
Shipping Weight	5.8 lbs.
Carton Dimensions	5.5" x 6.75" x 72"

Performance:	
1 Gain (dB)	
VHF Low Band	2.1
VHF High Band	6.4
UHF Band	5.7
2 Half-Power Beamwidth (deg.)	
VHF Low Band	79.3
VHF High Band	37.5
UHF Band	41.4
3 Front-To-Back Ratio (dB)	
VHF Low Band	6.3
VHF High Band	13.2
UHF Band	14.1

1: Over Half-Wave Tuned Dipole (Ch. 2 - 62)

2: -3 dB Down Points

3: Opposite Hemisphere

Antennacraft, P.O. Box 1005, Burlington, IA 52601

Engineering Specifications

ANTENNACRAFT®

Model CCS1843 VHF/UHF/FM Antenna

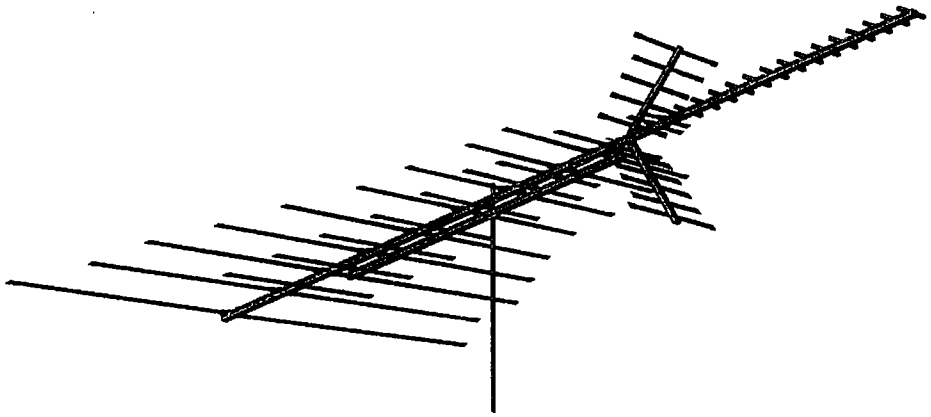

Model Number:	CCS-1843

General:

Channels	2 - 69
Electronic Elements	54
Output Impedance	300 ohms

Physical:

Boom Length	180"
Maximum Width	110"
Vertical Height	38"
Turning Radius	105"
Element Diameter	.375"
Shipping Weight	11.8 lbs.
Carton Dimensions	6.5" x 6.5" x 101"

Performance:

1	Gain (dB)	
	VHF Low Band	6.0
	VHF High Band	9.1
	UHF Band	9.3
2	Half-Power Beamwidth (deg.)	
	VHF Low Band	66.7
	VHF High Band	41.8
	UHF Band	36.4
3	Front-To-Back Ratio (dB)	
	VHF Low Band	19.6
	VHF High Band	17.2
	UHF Band	16.1

1: Over Half-Wave Tuned Dipole (Ch. 2 - 62)

2: -3 dB Down Points

3: Opposite Hemisphere

Antennacraft, P.O. Box 1005, Burlington, IA 52601

Engineering Specifications

ANTENNACRAFT®

Model CCS1538 VHF/UHF/FM Antenna

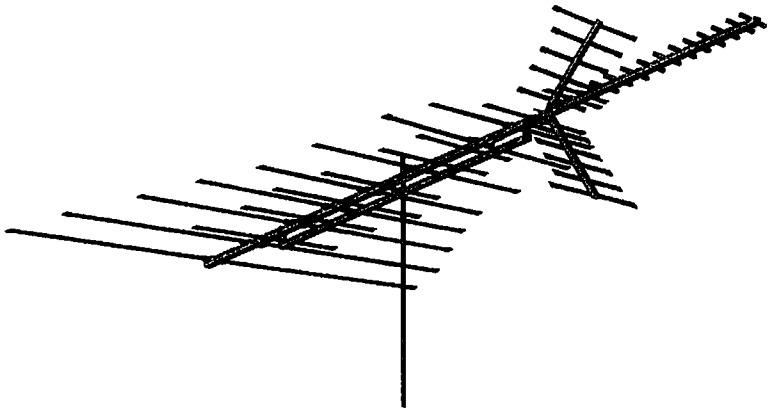

Model Number:	CCS-1538

General:	
Channels	2 - 69
Electronic Elements	48
Output Impedance	300 ohms

Physical:	
Boom Length	150"
Maximum Width	102"
Vertical Height	38"
Turning Radius	93.5"
Element Diameter	.375"
Shipping Weight	10.6 lbs.
Carton Dimensions	6.5" x 6.5" x 81"

Performance:	
1 Gain (dB)	
VHF Low Band	5.5
VHF High Band	8.5
UHF Band	8.3
2 Half-Power Beamwidth (deg.)	
VHF Low Band	67.0
VHF High Band	43.3
UHF Band	38.6
3 Front-To-Back Ratio (dB)	
VHF Low Band	14.8
VHF High Band	16.1
UHF Band	13.7

1: Over Half-Wave Tuned Dipole (Ch. 2 - 62)

2: -3 dB Down Points

3: Opposite Hemisphere

Antennacraft, P.O. Box 1005, Burlington, IA 52601

Engineering Specifications

ANTENNACRAFT®

Model CCS1233 VHF/UHF/FM Antenna

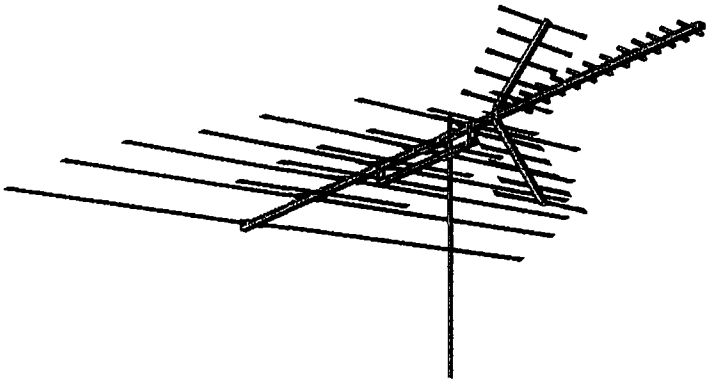

Model Number:	CCS-1233

General:

Channels	2 - 69
Electronic Elements	39
Output Impedance	300 ohms

Physical:

Boom Length	120"
Maximum Width	111"
Vertical Height	38"
Turning Radius	79.5"
Element Diameter	.375"
Shipping Weight	9.2 lbs.
Carton Dimensions	6.5" x 6.5" x 81"

Performance:

[1] Gain (dB)	
VHF Low Band	3.9
VHF High Band	7.2
UHF Band	6.8
[2] Half-Power Beamwidth (deg.)	
VHF Low Band	66.7
VHF High Band	31.8
UHF Band	39.2
[3] Front-To-Back Ratio (dB)	
VHF Low Band	13.4
VHF High Band	14.5
UHF Band	11.4

1: Over Half-Wave Tuned Dipole (Ch. 2 - 62)

2: -3 dB Down Points

3: Opposite Hemisphere

Antennacraft, P.O. Box 1005, Burlington, IA 52601

Engineering Specifications

ANTENNACRAFT®

Model CCS1025 VHF/UHF/FM Antenna

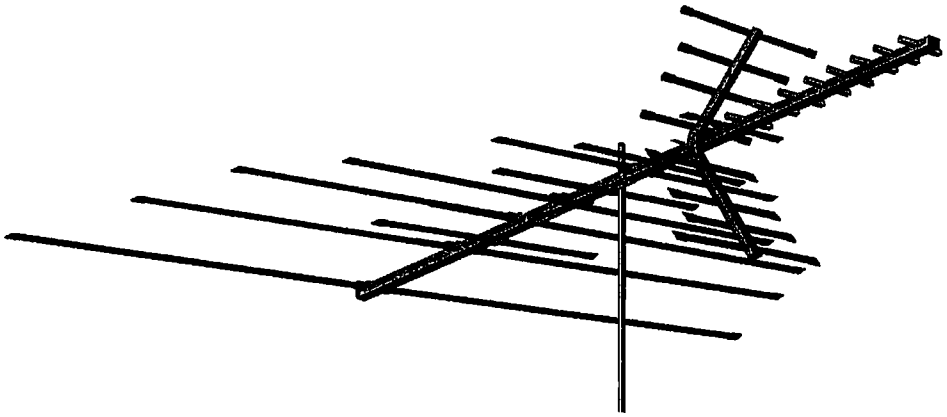

Model Number:	CCS-1025

General:

Channels	2 - 69
Electronic Elements	30
Output Impedance	300 ohms

Physical:

Boom Length	100"
Maximum Width	111"
Vertical Height	32"
Turning Radius	72.5"
Element Diameter	.375"
Shipping Weight	7.0 lbs.
Carton Dimensions	6.25" x 6.5" x 81"

Performance:

1	Gain (dB)	
	VHF Low Band	3.6
	VHF High Band	6.6
	UHF Band	5.9
2	Half-Power Beamwidth (deg.)	
	VHF Low Band	72.0
	VHF High Band	35.8
	UHF Band	39.4
3	Front-To-Back Ratio (dB)	
	VHF Low Band	10.6
	VHF High Band	12.6
	UHF Band	10.3

1: Over Half-Wave Tuned Dipole (Ch. 2 - 62)

2: -3 dB Down Points

3: Opposite Hemisphere

Engineering Specifications

ANTENNACRAFT®
Model CCS822 VHF/UHF/FM Antenna

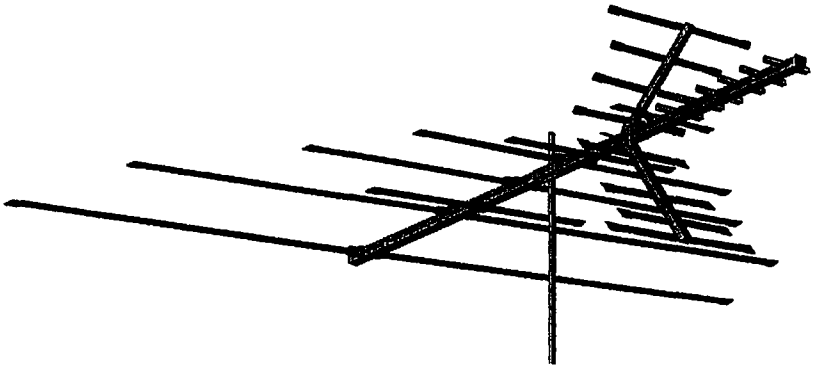

Model Number:	CCS-822

General:

Channels	2 - 69
Electronic Elements	26
Output Impedance	300 ohms

Physical:

Boom Length	80"
Maximum Width	111"
Vertical Height	32"
Turning Radius	66.5"
Element Diameter	.375"
Shipping Weight	5.8 lbs.
Carton Dimensions	6.5" x 6.5" x 81"

Performance:

[1] Gain (dB)	
VHF Low Band	3.3
VHF High Band	6.1
UHF Band	5.4
[2] Half-Power Beamwidth (deg.)	
VHF Low Band	71.0
VHF High Band	41.8
UHF Band	45.2
[3] Front-To-Back Ratio (dB)	
VHF Low Band	10.1
VHF High Band	11.2
UHF Band	10.9

1: Over Half-Wave Tuned Dipole (Ch. 2 - 62)

2: -3 dB Down Points

3: Opposite Hemisphere

Antennacraft, P.O. Box 1005, Burlington, IA 52601

Engineering Specifications

ANTENNACRAFT®
Model 5885 ColorKing® VHF/UHF/FM Antenna

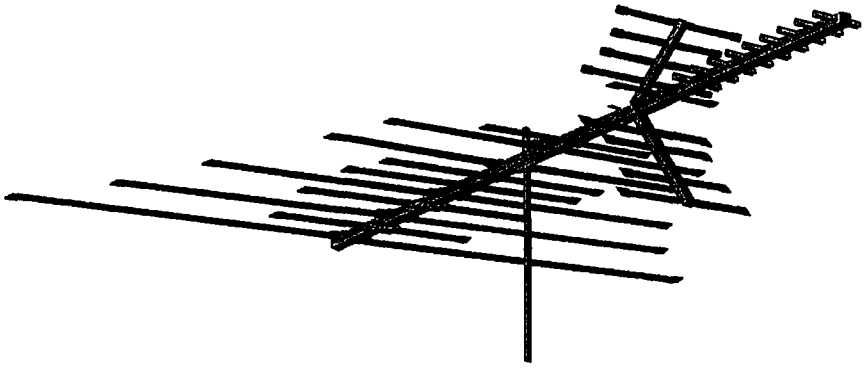

Model Number:	5885

General:	
Channels	2 - 69
Electronic Elements	34
Output Impedance	300 ohms

Physical:	
Boom Length	90"
Maximum Width	102"
Vertical Height	25"
Turning Radius	62"
Element Diameter	.375"
Shipping Weight	6.6 lbs.
Carton Dimensions	7.875" x 6.375" x 54.5"

Performance:	
1 Gain (dB)	
VHF Low Band	2.2
VHF High Band	5.7
UHF Band	5.9
2 Half-Power Beamwidth (deg.)	
VHF Low Band	72.0
VHF High Band	51.3
UHF Band	42.7
3 Front-To-Back Ratio (dB)	
VHF Low Band	8.9
VHF High Band	6.9
UHF Band	10.6

1: Over Half-Wave Tuned Dipole (Ch. 2 - 62)

2: -3 dB Down Points

3: Opposite Hemisphere

Engineering Specifications

ANTENNACRAFT®
Model 5884 ColorKing® VHF/UHF/FM Antenna

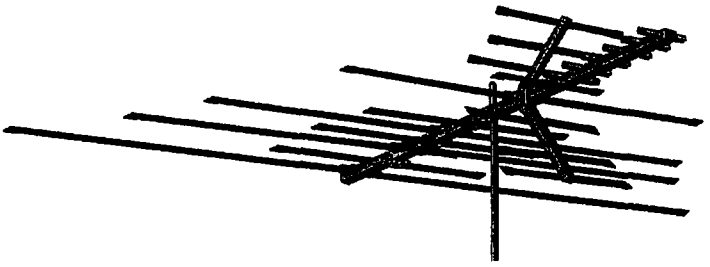

Model Number:	5884

General:

Channels	2 - 69
Electronic Elements	25
Output Impedance	300 ohms

Physical:

Boom Length	58"
Maximum Width	102"
Vertical Height	25"
Turning Radius	58"
Element Diameter	.375"
Shipping Weight	5.1 lbs.
Carton Dimensions	6.375" x 5.875" x 58.5"

Performance:

[1] Gain (dB)	
VHF Low Band	2.5
VHF High Band	6.5
UHF Band	6.0
[2] Half-Power Beamwidth (deg.)	
VHF Low Band	70.0
VHF High Band	39.8
UHF Band	45.4
[3] Front-To-Back Ratio (dB)	
VHF Low Band	7.3
VHF High Band	9.0
UHF Band	9.9

1: Over Half-Wave Tuned Dipole (Ch. 2 - 62)

2: -3 dB Down Points

3: Opposite Hemisphere

Engineering Specifications

ANTENNACRAFT®
Model 5883 ColorKing® VHF/UHF/FM Antenna

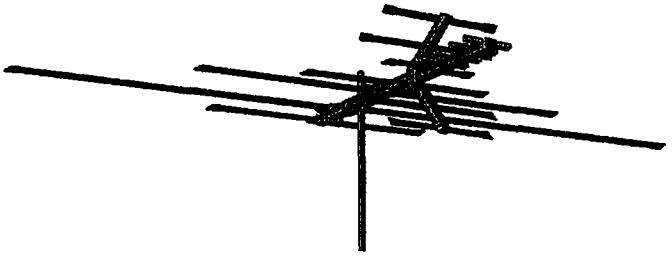

Model Number:	5883

General:	
Channels	2 - 69
Electronic Elements	16
Output Impedance	300 ohms

Physical:	
Boom Length	30"
Maximum Width	98"
Vertical Height	16.25"
Turning Radius	50.5"
Element Diameter	.375"
Shipping Weight	3.5 lbs.
Carton Dimensions	6.375" x 5.875" x 51.375"

Performance:	
[1] Gain (dB)	
VHF Low Band	0.5
VHF High Band	4.8
UHF Band	4.1
[2] Half-Power Beamwidth (deg.)	
VHF Low Band	74.7
VHF High Band	52.0
UHF Band	47.0
[3] Front-To-Back Ratio (dB)	
VHF Low Band	1.1
VHF High Band	8.6
UHF Band	7.3

1: Over Half-Wave Tuned Dipole (Ch. 2 - 62)

2: -3 dB Down Points

3: Opposite Hemisphere

Engineering Specifications

ANTENNACRAFT®

Model C480 VHF/UHF/FM Antenna

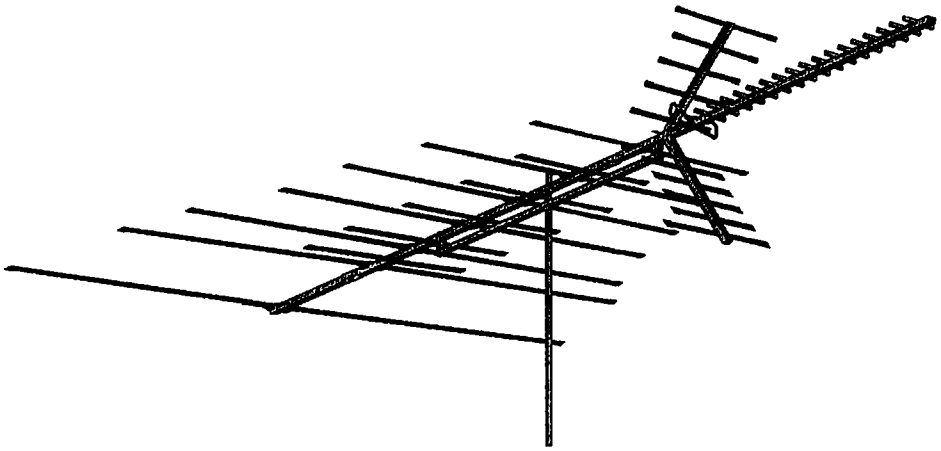

Model Number:	C-480

General:

Channels	2 - 69
Electronic Elements	48
Output Impedance	300 ohms

Physical:

Boom Length	150"
Maximum Width	112"
Vertical Height	38"
Turning Radius	86.5"
Element Diameter	.375"
Shipping Weight	8.7 lbs.
Carton Dimensions	5.75" x 8.75" x 71"

Performance:

[1] Gain (dB)	
VHF Low Band	5.0
VHF High Band	8.6
UHF Band	8.4
[2] Half-Power Beamwidth (deg.)	
VHF Low Band	66.7
VHF High Band	34.5
UHF Band	42.7
[3] Front-To-Back Ratio (dB)	
VHF Low Band	18.0
VHF High Band	15.1
UHF Band	13.0

1: Over Half-Wave Tuned Dipole (Ch. 2 - 62)

2: -3 dB Down Points

3: Opposite Hemisphere

Antennacraft, P.O. Box 1005, Burlington, IA 52601

Engineering Specifications

ANTENNACRAFT®
Model AC13 VHF/UHF/FM Antenna

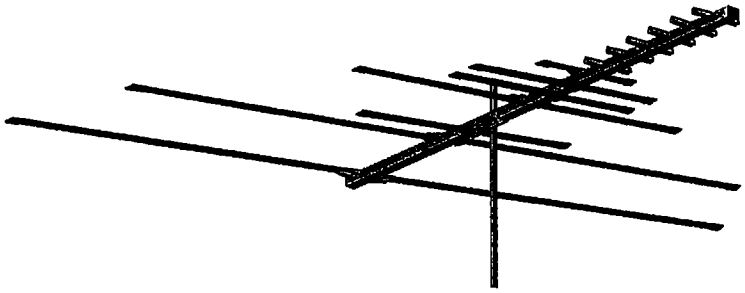

Model Number:	AC-13

General:

Channels	2 - 69
Electronic Elements	16
Output Impedance	300 ohms

Physical:

Boom Length	70"
Maximum Width	112"
Vertical Height	4"
Turning Radius	62.5"
Element Diameter	.375"
Shipping Weight	3.9 lbs.
Carton Dimensions	5.25" x 4.75" x 71"

Performance:

[1] Gain (dB)	
VHF Low Band	1.4
VHF High Band	4.1
UHF Band	2.0
[2] Half-Power Beamwidth (deg.)	
VHF Low Band	71.3
VHF High Band	57.8
UHF Band	47.5
[3] Front-To-Back Ratio (dB)	
VHF Low Band	7.2
VHF High Band	10.0
UHF Band	5.3

1: Over Half-Wave Tuned Dipole (Ch. 2 - 62)

2: -3 dB Down Points

3: Opposite Hemisphere

Antennacraft, P.O. Box 1005, Burlington, IA 52601

Engineering Specifications

ANTENNACRAFT®

Model AC9 VHF/UHF/FM Antenna

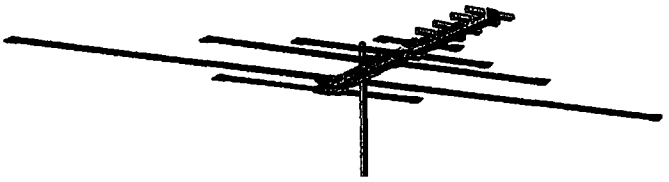

Model Number:	AC-9

General:

Channels	2 - 69
Electronic Elements	12
Output Impedance	300 ohms

Physical:

Boom Length	30"
Maximum Width	98"
Vertical Height	4"
Turning Radius	50.5"
Element Diameter	.375"
Shipping Weight	2.8 lbs.
Carton Dimensions	5.75" x 4.75" x 51"

Performance:

[1] Gain (dB)	
VHF Low Band	0.4
VHF High Band	3.7
UHF Band	3.0
[2] Half-Power Beamwidth (deg.)	
VHF Low Band	75.7
VHF High Band	54.8
UHF Band	52.1
[3] Front-To-Back Ratio (dB)	
VHF Low Band	1.0
VHF High Band	7.5
UHF Band	6.9

1: Over Half-Wave Tuned Dipole (Ch. 2 - 62)

2: -3 dB Down Points

3: Opposite Hemisphere

Antennacraft, P.O. Box 1005, Burlington, IA 52601

Engineering Specifications

ANTENNACRAFT®
Model CS1100 VHF/FM Antenna

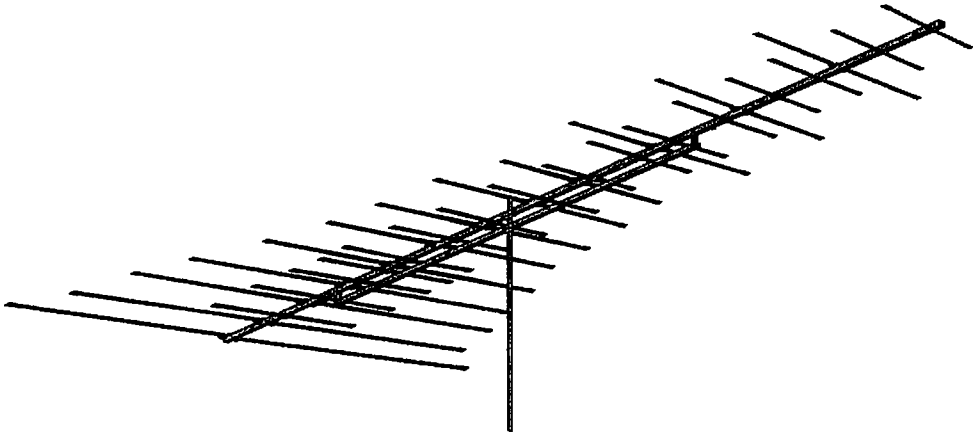

Model Number:	CS-1100

General:

Channels	2 - 13
Electronic Elements	42
Output Impedance	300 ohms

Physical:

Boom Length	180"
Maximum Width	110"
Vertical Height	6"
Turning Radius	108"
Element Diameter	.375"
Shipping Weight	11.8 lbs.
Carton Dimensions	5.25" x 6" x 112"

Performance:

1 Gain (dB)	
VHF Low Band	6.9
VHF High Band	9.6
UHF Band	N/A
2 Half-Power Beamwidth (deg.)	
VHF Low Band	61.0
VHF High Band	38.5
UHF Band	N/A
3 Front-To-Back Ratio (dB)	
VHF Low Band	19.4
VHF High Band	17.6
UHF Band	N/A

1: Over Half-Wave Tuned Dipole

2: -3 dB Down Points

3: Opposite Hemisphere

Antennacraft, P.O. Box 1005, Burlington, IA 52601

Engineering Specifications

ANTENNACRAFT®

Model CS900 VHF/FM Antenna

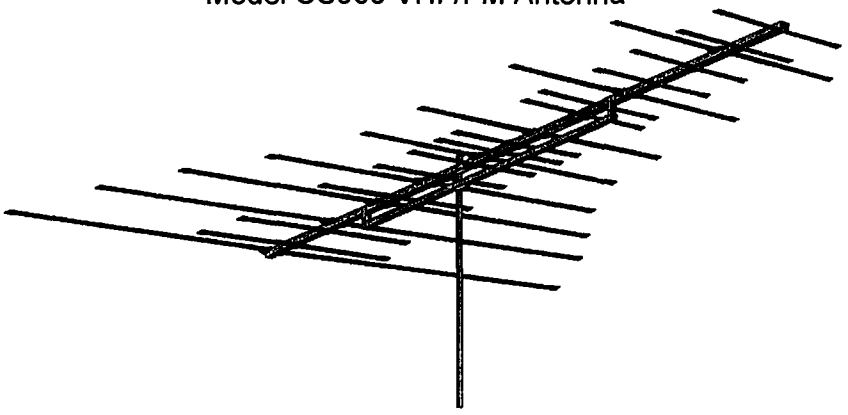

Model Number:	CS-900

General:

Channels	2 - 13
Electronic Elements	33
Output Impedance	300 ohms

Physical:

Boom Length	120"
Maximum Width	112"
Vertical Height	6"
Turning Radius	73"
Element Diameter	.375"
Shipping Weight	8.2 lbs.
Carton Dimensions	6.5" x 6.5"x 81"

Performance:

1	Gain (dB)	
	VHF Low Band	5.9
	VHF High Band	8.0
	UHF Band	N/A
2	Half-Power Beamwidth (deg.)	
	VHF Low Band	64.7
	VHF High Band	37.5
	UHF Band	N/A
3	Front-To-Back Ratio (dB)	
	VHF Low Band	13.6
	VHF High Band	13.4
	UHF Band	N/A

1: Over Half-Wave Tuned Dipole

2: -3 dB Down Points

3: Opposite Hemisphere

Antennacraft, P.O. Box 1005, Burlington, IA 52601

Engineering Specifications

ANTENNACRAFT®
Model CS600 VHF/FM Antenna

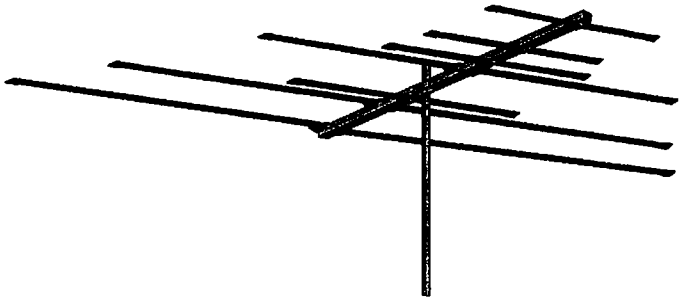

Model Number:	CS-600

General:

Channels	2 - 13
Electronic Elements	10
Output Impedance	300 ohms

Physical:

Boom Length	50"
Maximum Width	102"
Vertical Height	4"
Turning Radius	55"
Element Diameter	.375"
Shipping Weight	3.5 lbs.
Carton Dimensions	5.875" x 4.75" x 61"

Performance:

[1] Gain (dB)	
VHF Low Band	2.3
VHF High Band	5.5
UHF Band	N/A
[2] Half-Power Beamwidth (deg.)	
VHF Low Band	72.0
VHF High Band	37.3
UHF Band	N/A
[3] Front-To-Back Ratio (dB)	
VHF Low Band	6.4
VHF High Band	7.9
UHF Band	N/A

1: Over Half-Wave Tuned Dipole

2: -3 dB Down Points

3: Opposite Hemisphere

Antennacraft, P.O. Box 1005, Burlington, IA 52601

Engineering Specifications

ANTENNACRAFT®

Model Y5-2-6 VHF Yagi Antenna

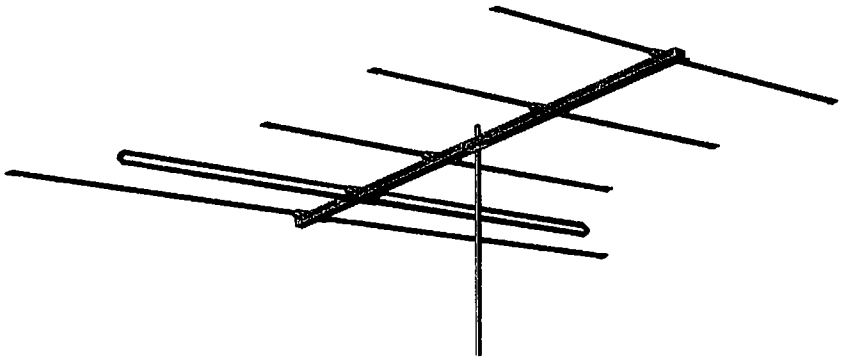

Model Number:	Y5-2-6

General:	
Channels	2 - 6
Electronic Elements	5
Output Impedance	300 ohms

Physical:	
Boom Length	80"
Maximum Width	112"
Vertical Height	4"
Turning Radius	69"
Element Diameter	.375"
Shipping Weight	4.5 lbs.
Carton Dimensions	5.875" x 4.75" x 81"

Performance:	
[1] Gain (dB)	
VHF Low Band	4.9
VHF High Band	N/A
UHF Band	N/A
[2] Half-Power Beamwidth (deg.)	
VHF Low Band	66.3
VHF High Band	N/A
UHF Band	N/A
[3] Front-To-Back Ratio (dB)	
VHF Low Band	9.8
VHF High Band	N/A
UHF Band	N/A

1: Over Half-Wave Tuned Dipole

2: -3 dB Down Points

3: Opposite Hemisphere

Engineering Specifications

ANTENNACRAFT®

Model Y5-7-13 VHF Yagi Antenna

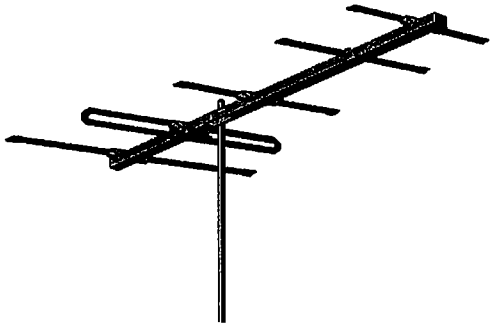

Model Number:	Y5-7-13

General:

Channels	7 - 13
Electronic Elements	5
Output Impedance	300 ohms

Physical:

Boom Length	60"
Maximum Width	35.75"
Vertical Height	4"
Turning Radius	41.5"
Element Diameter	.375"
Shipping Weight	4.7 lbs.
Carton Dimensions	5.875" x 4.75" x 61"

Performance:

1	Gain (dB)	
	VHF Low Band	N/A
	VHF High Band	6.9
	UHF Band	N/A
2	Half-Power Beamwidth (deg.)	
	VHF Low Band	N/A
	VHF High Band	55.5
	UHF Band	N/A
3	Front-To-Back Ratio (dB)	
	VHF Low Band	N/A
	VHF High Band	13.3
	UHF Band	N/A

1: Over Half-Wave Tuned Dipole

2: -3 dB Down Points

3: Opposite Hemisphere

Antennacraft, P.O. Box 1005, Burlington, IA 52601

Engineering Specifications

ANTENNACRAFT®
Model Y5-7-13 VHF Yagi Antenna

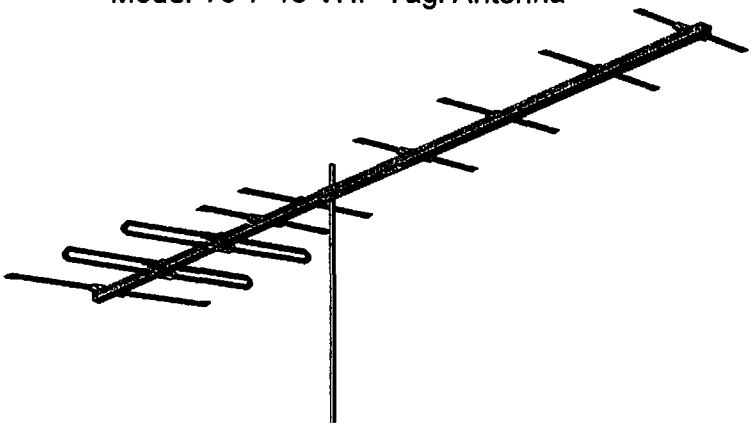

Model Number:	Y10-7-13

General:

Channels	7 - 13
Electronic Elements	10
Output Impedance	300 ohms

Physical:

Boom Length	120"
Maximum Width	35.75"
Vertical Height	4"
Turning Radius	70"
Element Diameter	.375"
Shipping Weight	4.8 lbs.
Carton Dimensions	4.5" x 6" x 71"

Performance:

[1] Gain (dB)	
VHF Low Band	N/A
VHF High Band	9.4
UHF Band	N/A
[2] Half-Power Beamwidth (deg.)	
VHF Low Band	N/A
VHF High Band	44.5
UHF Band	N/A
[3] Front-To-Back Ratio (dB)	
VHF Low Band	N/A
VHF High Band	16.5
UHF Band	N/A

1: Over Half-Wave Tuned Dipole

2: -3 dB Down Points

3: Opposite Hemisphere

Engineering Specifications

ANTENNACRAFT®
Model 3BG22 Permacolor® VHF/FM Antenna

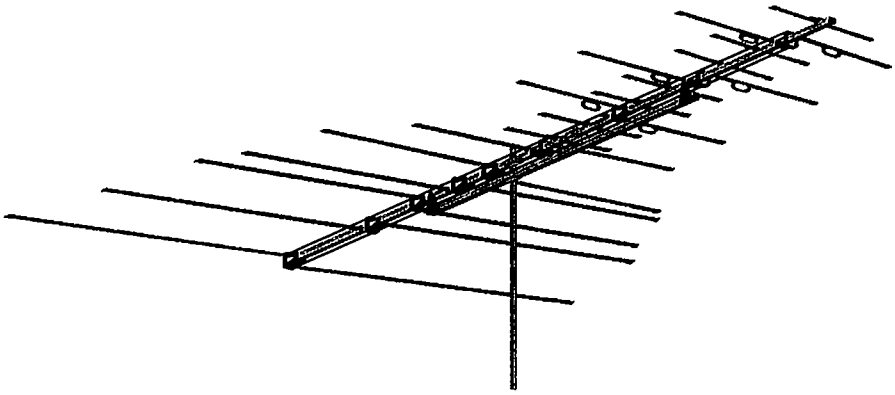

Model Number:	3BG22

General:

Channels	2 - 13
Electronic Elements	22
Output Impedance	300 ohms

Physical:

Boom Length	134"
Maximum Width	108"
Vertical Height	4"
Turning Radius	82.5"
Element Diameter	.375"
Shipping Weight	7.5 lbs.
Carton Dimensions	5.75" x 8.75" x 88.25"

Performance:

Gain (dB)[1]	
VHF Low Band	5.3
VHF High Band	9.0
UHF Band	N/A
Half-Power Beamwidth (deg.)[2]	
VHF Low Band	66.0
VHF High Band	37.3
UHF Band	N/A
Front-To-Back Ratio (dB)[3]	
VHF Low Band	15.8
VHF High Band	15.5
UHF Band	N/A

1: Over Half-Wave Tuned Dipole

2: -3 dB Down Points

3: Opposite Hemisphere

Printed in U.S.A

Antennacraft, P.O. Box 1005, Burlington, IA 52601

Engineering Specifications

ANTENNACRAFT®
Model 3BG17 Permacolor® VHF/FM Antenna

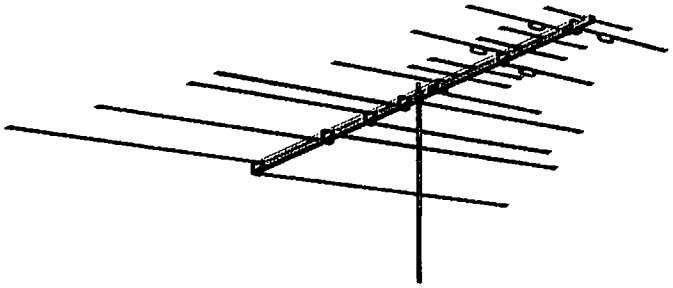

Model Number:	3BG17

General:	
Channels	2 - 13
Electronic Elements	17
Output Impedance	300 ohms

Physical:	
Boom Length	97"
Maximum Width	108"
Vertical Height	4"
Turning Radius	73"
Element Diameter	.375"
Shipping Weight	7.0 lbs.
Carton Dimensions	5" x 5.25" x 103"

Performance:	
Gain (dB)	
VHF Low Band	4.9
VHF High Band	8.0
UHF Band	N/A
Half-Power Beamwidth (deg.)	
VHF Low Band	68.0
VHF High Band	46.8
UHF Band	N/A
Front-To-Back Ratio (dB)	
VHF Low Band	13.2
VHF High Band	14.3
UHF Band	N/A

1: Over Half-Wave Tuned Dipole

2: -3 dB Down Points

3: Opposite Hemisphere

Antennacraft, P.O. Box 1005, Burlington, IA 52601

Engineering Specifications

ANTENNACRAFT®

Model MXU59 UHF Antenna

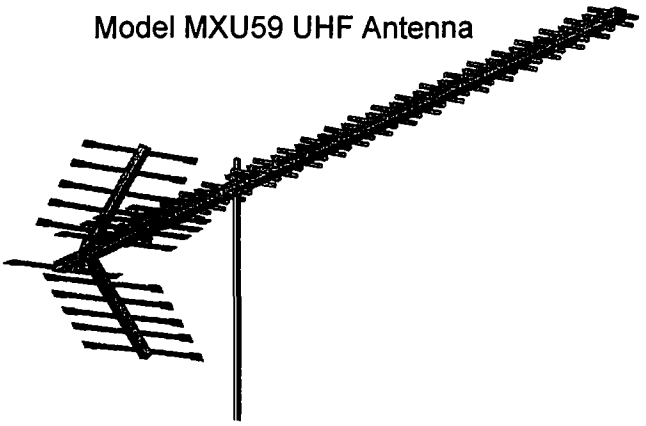

Model Number:	MXU-59

General:

Channels	14 - 69
Electronic Elements	59
Output Impedance	300 ohms

Physical:

Boom Length	100"
Maximum Width	20"
Vertical Height	38"
Turning Radius	66"
Element Diameter	.375"
Shipping Weight	7.0 lbs.
Carton Dimensions	6.25" x 6.25" x 101"

Performance:

[1] Gain (dB)	
VHF Low Band	N/A
VHF High Band	N/A
UHF Band	10.7
[2] Half-Power Beamwidth (deg.)	
VHF Low Band	N/A
VHF High Band	N/A
UHF Band	32.4
[3] Front-To-Back Ratio (dB)	
VHF Low Band	N/A
VHF High Band	N/A
UHF Band	17.0

1: Over Half-Wave Tuned Dipole (Ch. 14 - 62)

2: -3 dB Down Points

3: Opposite Hemisphere

Antennacraft, P.O. Box 1005, Burlington, IA 52601

Engineering Specifications

ANTENNACRAFT®

Model MXU47 UHF Antenna

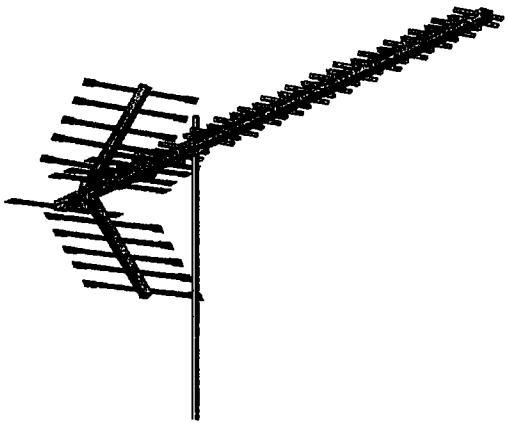

Model Number:	MXU-47

General:

Channels	14 - 69
Electronic Elements	47
Output Impedance	300 ohms

Physical:

Boom Length	80"
Maximum Width	20"
Vertical Height	32"
Turning Radius	52.5"
Element Diameter	.375"
Shipping Weight	6.0 lbs.
Carton Dimensions	6.25" x 6.25" x 81"

Performance:

1	Gain (dB)	
	VHF Low Band	N/A
	VHF High Band	N/A
	UHF Band	10.1
2	Half-Power Beamwidth (deg.)	
	VHF Low Band	N/A
	VHF High Band	N/A
	UHF Band	33.0
3	Front-To-Back Ratio (dB)	
	VHF Low Band	N/A
	VHF High Band	N/A
	UHF Band	16.1

1: Over Half-Wave Tuned Dipole (Ch. 14 - 62)

2: -3 dB Down Points

3: Opposite Hemisphere

Antennacraft, P.O. Box 1005, Burlington, IA 52601

Engineering Specifications

ANTENNACRAFT®

Model MXU37 UHF Antenna

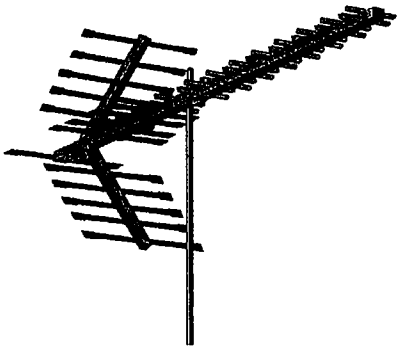

Model Number:	MXU-37

General:

Channels	14 - 69
Electronic Elements	37
Output Impedance	300 ohms

Physical:

Boom Length	60"
Maximum Width	20"
Vertical Height	32"
Turning Radius	34.5"
Element Diameter	.375"
Shipping Weight	5.0 lbs.
Carton Dimensions	6.25" x 6.25" x 61"

Performance:

[1] Gain (dB)	
VHF Low Band	N/A
VHF High Band	N/A
UHF Band	9.2
[2] Half-Power Beamwidth (deg.)	
VHF Low Band	N/A
VHF High Band	N/A
UHF Band	37.9
[3] Front-To-Back Ratio (dB)	
VHF Low Band	N/A
VHF High Band	N/A
UHF Band	14.8

1: Over Half-Wave Tuned Dipole (Ch. 14 - 62)

2: -3 dB Down Points

3: Opposite Hemisphere

Antennacraft, P.O. Box 1005, Burlington, IA 52601

Engineering Specifications

ANTENNACRAFT®
Model U1000 UHF Antenna

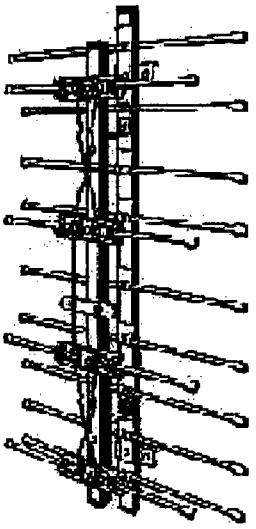

Model Number:	U-1000

General:

Channels	14 - 69
Electronic Elements	17
Output Impedance	300 ohms

Physical:

Boom Length	35"
Maximum Width	20"
Vertical Height	35"
Turning Radius	10"
Element Diameter	.375"
Shipping Weight	3.1 lbs.
Carton Dimensions	5.75" x 6.75" x 51.5"

Performance:

[1] Gain (dB)	
VHF Low Band	N/A
VHF High Band	N/A
UHF Band	8.1
[2] Half-Power Beamwidth (deg.)	
VHF Low Band	N/A
VHF High Band	N/A
UHF Band	51.0
[3] Front-To-Back Ratio (dB)	
VHF Low Band	N/A
VHF High Band	N/A
UHF Band	20.5

1: Over Half-Wave Tuned Dipole (Ch. 14 - 62)

2: -3 dB Down Points

3: Opposite Hemisphere

Engineering Specifications

ANTENNACRAFT®
Model CY1470 UHF Antenna

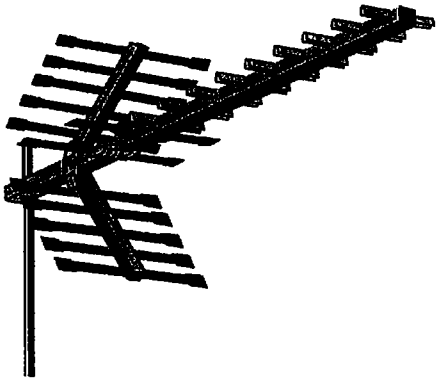

Model Number:	CY-1470

General:

Channels	14 - 69
Electronic Elements	21
Output Impedance	300 ohms

Physical:

Boom Length	50"
Maximum Width	16"
Vertical Height	25"
Turning Radius	48.5"
Element Diameter	.375"
Shipping Weight	3.3 lbs.
Carton Dimensions	6.25" x 5.75" x 51"

Performance:

[1] Gain (dB)	
VHF Low Band	N/A
VHF High Band	N/A
UHF Band	7.3
[2] Half-Power Beamwidth (deg.)	
VHF Low Band	N/A
VHF High Band	N/A
UHF Band	44.6
[3] Front-To-Back Ratio (dB)	
VHF Low Band	N/A
VHF High Band	N/A
UHF Band	16.4

1: Over Half-Wave Tuned Dipole (Ch. 14 - 62)

2: -3 dB Down Points

3: Opposite Hemisphere

Antennacraft, P.O. Box 1005, Burlington, IA 52601

Antennas Direct Antennas

ANTENNAS DIRECT

HDTV Antenna Review

The following chart highlights the main characteristics for all of our HDTV antennas. It is important to note that the range of an antenna will vary greatly depending on the height, power, and frequency of the transmitting tower as well as the height of the antenna and the terrain and number of obstacles between it and the receiver. See our **Choosing the Best HDTV Antenna** page for more information.

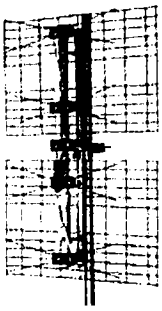

Indoor Antennas
Short Range Antennas
Medium Range Antennas
Long Range Antennas
VHF Antennas
Yagi Antennas
Mounting Brackets
Cable, Amps, & Combiners

Product Name	Range*	Style	Indoor | Outdoor	Primary Channels	Gain	Length/ Depth	Width	Height	Weight
Short Range									
DB2	1-30	Multi-Directional	Indoor | Outdoor	UHF 14-69	11.4 dB	4"	19"	12"	2.8 lbs.
SR8	1-15	Uni-Directional	Indoor	UHF 14-69	6.5 dB				
SR15	1-30	Uni-Directional	Outdoor	UHF 14-69	11.0 dB	35"	13"	14"	4.5 lbs.
PF7	1-15	Multi-Directional	Indoor	UHF 14-69	6.5 dB	1"	11"	8"	1.5 lbs.
Medium Range									
DB2	1-30	Multi-Directional	Indoor | Outdoor	UHF 14-69	11.4 dB	4"	19"	12"	2.8 lbs.
DB4	15-55	Multi-Directional	Outdoor	UHF 14-69	13.7 dB	4"	19"	29"	4.5 lbs.
SR15	1-30	Uni-Directional	Outdoor	UHF 14-69	11.0 dB	35"	13"	14"	4.5 lbs.
42XG	10-50	Uni-Directional	Outdoor	UHF 14-69	14.2 dB	39"	19"	15"	4.0 lbs.
Long Range									
DB8	50-70+	Multi-Directional	Outdoor	UHF 14-69	15.8 dB	4"	42"	29"	10.0 lbs.
43XG	15-60	Uni-Directional	Outdoor	UHF 14-69	15.7 dB	62"	18"	19"	5.0 lbs.
91XG	50-70+	Uni-Directional	Outdoor	UHF 14-69	16.7 dB	93"	20"	22"	6.5 lbs.
VHF									
V10	1-25	Uni-Directional	Outdoor	VHF 7-13, UHF 14-69	7.8 dB	32"	69"	n/a	4.5 lbs.
V15	1-45	Uni-Directional	Outdoor	VHF 7-13, UHF 14-69	10.8 dB	43"	95"	n/a	6.5 lbs.
V21	15-65	Uni-Directional	Outdoor	VHF 2-13, UHF 14-69	12.9 dB	59"	110"	n/a	8.5 lbs.
V4	1-55	Uni-Directional	Outdoor	VHF 2-6	4.5 dB	48"	112"	n/a	5.5 lbs.

*The range of an antenna will vary greatly depending on many factors including the height of the mount, topography, direction, etc...

note: all measurements are taken at the widest/highest part of the antenna

Copyright © Antennas Direct, 2005
Antennas Direct, 1511 Windwood Hills Rd. Wildwood, MO 63021
877-825-5572

Web Design by Captiva Marketing

Channel Master Antennas

(Data provided directly by Channel Master.)

UHF ANTENNAS

		Antenna Model	4228	4248	3023	3021/4221	4308/3022
Channel	**Frequency(MHz)**		**Gain**	**Gain**	**Gain**	**Gain**	**Gain**
14	470		10.8	10.2	9.3	8	5.4
19	500		11.7	10.6	9.7	8.3	6
27	548		12.1	11	10.5	9.4	6.2
35	596		12.1	11.4	10.8	10	6.9
43	644		12.7	12.4	11	11	6.2
52	698		13	13	12.4	12	9.8
60	746		11.5	11.8	11.8	12.9	9.8
69	800		11.5	6.2	8.7	12.8	-0.8
		Average Gain	11.9	10.8	10.5	10.6	6.2
		Size	2.77	2.56	2.56	0.9	0.51
		Length	NA	82	82	NA	41

Gain in db over tuned dipole
Size in square feet
Length in inches

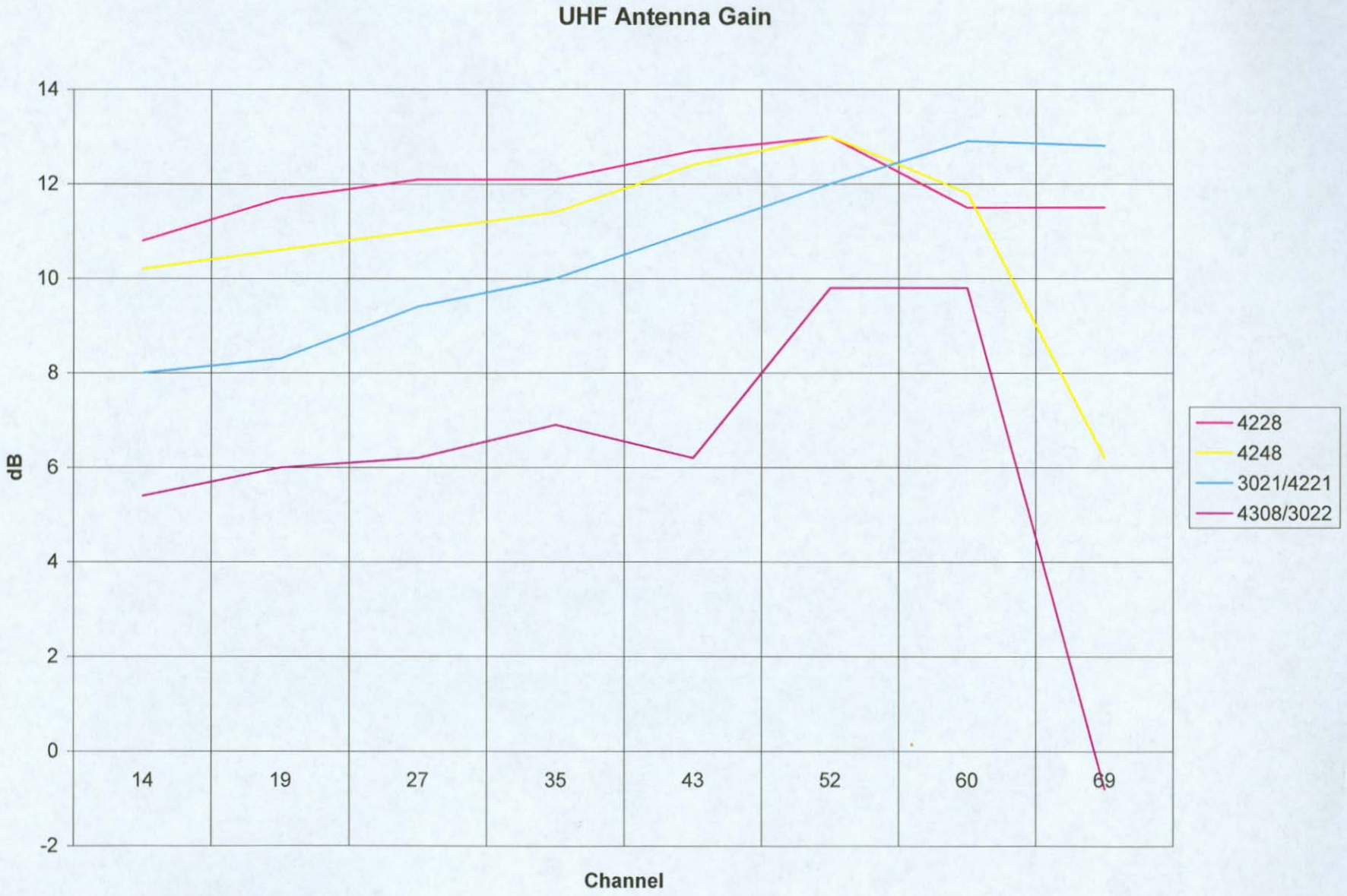
UHF Antenna Gain
14
12
10
8
6
4
2
0
-2
dB
14
19
27
35
43
52
60
69
Channel
4228
4248
3021/4221
4308/3022

UHF only pattern summary

		antenna model	4228	4248	3023	4221/3021	4308/3022
Channel	Frequency(MHz)		BW, F/B	BW, F/B	BW, F/B	BW, F/B	BW, F/B
14	470		37deg, 22db	42deg, 17db	43deg, 18db	59deg, 17db	56deg, 21db
19	500		29deg, 23db	36deg, 22db	37deg, 19db	57deg, 16db	54deg, 19db
27	548		26deg, 21db	32deg, 19db	37deg, 23db	54deg, 15db	52deg, 20db
35	596		24deg, 19db	30deg, 21db	34deg, 16db	52deg, 17db	48deg, 15db
43	644		23deg, 24db	27deg, 24db	32deg, 17db	48deg, 16db	43deg, 18db
52	698		20deg, 21db	23deg, 18db	31deg, 19db	44deg, 17db	37deg, 20db
60	746		18deg, 20db	20deg, 15db	24deg, 18db	41deg, 15db	31deg, 16db

BW= 3db beamwidth in degrees
F/B= front to back ratio in db

CROSSFIRE VHF ANTENNAS

	Antenna Model	3610	3611	3612	3613	3614
Channel		Gain	Gain	Gain	Gain	Gain
2		5	4.8	4.2	3.8	2
3		5.6	5.3	5.3	5	3.5
4		5.4	5.2	5.2	5.3	3.8
5		6.7	6.1	6.2	4.4	3.8
6		6.2	5.2	5	4.2	3.9
	Low band avg	5.8	5.3	5.2	4.5	3.4
7		10.6	10.5	10.5	9.6	8.3
8		11.4	10.4	10.3	9.6	8.5
9		11.5	10.1	10.2	9.8	8.6
10		11.6	10.3	10	9.6	8.4
11		11.8	10	9.5	9.6	8.6
12		11.2	10.2	9.1	9	8.1
13		11.6	9.4	7.5	7.4	6.2
	High band avg	11.4	10.1	9.6	9.2	8.1
	Size	4.49	3.89	3.5	2.8	1.91
	Length	147	122	111	87	63

Gain in db over tuned dipole
Size in square feet

Crossfire VHF only Gain
14
12
10
8
6
4
2
0
dB
2
3
4
5
6
7
8
9
10
11
12
13
Channel
3610
3612
3614

CROSSFIRE U/V ANTENNAS

		Antenna Model	3671	3678	3679	3677
Channel	**Frequency(MHz)**		Gain	Gain	Gain	Gain
2	54		4.9	5.2	3.8	2.2
3	60		5.5	4.8	5	2.7
4	66		5	5.2	3.5	3
5	76		6.2	4.8	4	1.5
6	82		6.2	3.7	3.5	2.2
		Low band avg	5.6	4.7	4.0	2.3
7	174		11	10.5	8.8	7.2
8	180		11.5	10.4	8	7.7
9	186		11	9.6	7.9	8
10	192		11	10	8.4	8.2
11	198		10.9	10	8.8	8.2
12	204		11	9.8	8.2	9
13	210		9.6	7	6.7	7
		High band avg	10.9	9.6	8.1	7.9
14	470		7.5	8.8	7.2	7.8
19	500		9.5	9	9	7.9
27	548		9.8	8.6	8.2	7.8
35	596		9.9	9.8	9.8	8.1
43	644		10	10	9.6	9
52	698		12.5	12.1	11.8	10.2
60	746		11	9	10.9	9
69	800		7.2	-0.5	4	7
		uhf avg	9.7	8.4	8.8	8.4
		size	4.92	3.98	3.2	2.51
		length	173	151	122	97

Gain in db over tuned dipole
Size in square feet
Length in inches

Crossfire UHF/VHF Antennas

Gain, Beamwidth, Front to Back Ratio

Channel	Antenna Model	3671 Gain	3672 Gain	3678 Gain	3679 Gain	3674 Gain	3675 Gain	3677 Gain
2		4.9	5	5.2	3.8	3.8	2.8	2.2
3		5.5	5	4.8	5	4.7	2.7	2.7
4		5	5.1	5.2	3.5	4	2.8	3
5		6.2	4.9	4.8	4	4.1	3.2	1.5
6		6.2	4.6	3.7	3.5	3.9	4	2.2
	Low band avg	5.6	4.9	4.7	4.0	4.1	3.1	2.3
7		11	10.8	10.5	8.8	9.5	7.2	7.2
8		11.5	10.5	10.4	8	9	7.6	7.7
9		11	10.2	9.6	7.9	8.4	8	8
10		11	10.8	10	8.4	9.2	7.9	8.2
11		10.9	10.8	10	8.8	9.5	7.7	8.2
12		11	10.8	9.8	8.2	8.8	8.8	9
13		9.6	10	7	6.7	7	5	7
	High band avg	10.9	10.6	9.6	8.1	8.8	7.5	7.9
14		7.5	6	8.8	7.2	6	6	7.8
19		9.5	9	9	9	8	6.8	7.9
27		9.8	9.8	8.6	8.2	7.1	6.5	7.8
35		9.9	10.2	9.8	9.8	8.2	7.2	8.1
43		10	9.8	10	9.6	8.8	8	9
52		12.5	12.5	12.1	11.8	10.5	9.2	10.2
60		11	10	9	10.9	10.5	8.3	9
	uhf avg	10.0	9.6	9.6	9.5	8.4	7.4	8.5
	size	4.92	4.4	3.98	3.2	2.67	2.42	2.51
	length	173	154	151	122	109	96	97

Gain in db over tuned dipole
Size in square feet
Length in inches

Channel	Antenna model	3671 BW, F/B	3672 BW, F/B	3678 BW, F/B	3679 BW, F/B	3674 BW, F/B	3677 BW, F/B	3675 BW, F/B	3676 BW, F/B
2		69deg, 24db	67deg, 21db	69deg, 21db	74deg, 10db	74deg, 10db	73deg, 12db	73deg, 11db	73deg, 12db
4		69deg, 24db	66deg, 21db	69deg, 20db	65deg, 18db	66deg, 17db	76deg, 10db	72deg, 12db	76deg, 10db
6		68deg, 26db	71deg, 21db	74deg, 22db	72deg, 15db	73deg, 15db	76deg, 11db	77deg, 13db	77deg, 10db
7		26deg, 18db	24deg, 14db	30deg, 17db	30deg, 15db	30deg, 15db	45deg, 16db	32deg, 11db	45deg, 18db
9		34deg, 18db	34deg, 17db	36deg, 15db	32deg, 16db	31deg, 15db	42deg, 11db	46deg, 14db	43deg, 11db
11		36deg, 14db	37deg, 17db	37deg, 14db	32deg, 12db	32deg, 13db	33deg, 9db	33deg, 10db	34deg, 9db
13		35deg, 16db	34deg, 16db	33deg, 13db	26deg, 10db	29deg, 9db	38deg, 11db	30deg, 11db	39deg, 11db
14		32deg, 12db	31deg, 12db	35deg, 17db	44deg, 13db	47deg, 10db	52deg, 10db	43deg, 5db	54deg, 8db
19		25deg, 13db	25deg, 13db	55deg, 17db	47deg, 21db	57deg, 15db	59deg, 12db	60deg, 12db	63deg, 11db
27		37deg, 17db	39deg, 15db	53deg, 14db	51deg, 12db	54deg, 11db	52deg, 11db	57deg, 11db	56deg, 9db
35		32deg, 15db	32deg, 14db	37deg, 14db	41deg, 13db	44deg, 12db	53deg, 16db	51deg, 12db	63deg, 16db
43		28deg, 15db	29deg, 15db	38deg, 17db	45deg, 15db	50deg, 14db	45deg, 19db	49deg, 14db	51deg, 17db
52		24deg, 16db	26deg, 18db	33deg, 18db	32deg, 23db	36deg, 21db	42deg, 18db	43deg, 17db	51deg, 18db
60		20deg, 9db	21deg, 11db	31deg, 12db	25deg, 14db	31deg, 14db	34deg, 14db	32deg, 16db	39deg, 13db

BW= 3db beamwidth in degrees
F/B= front to back ratio in db

ADVANTAGE ANTENNAS

	Antenna Model	3020	3019	3018	3017	3016	3015	3014
Channel		Gain	Gain	Gain	Gain	Gain	Gain	Gain
2		2.5	1	1.2	-1.2	2.2	0.2	-0.2
3		4.1	3.2	2.7	2.2	0.1	0.3	0.6
4		4.3	3.7	1.6	2.1	1.4	0.6	0.7
5		3.8	3.6	3.2	2.7	1.6	1.3	1.5
6		3.2	3.2	2.6	2.9	0.8	1.1	1.1
	Low band avg	3.6	2.9	2.3	1.74	1.2	0.7	0.7
7		6.6	7.6	8.4	7.9	8	5.5	4.4
8		8.8	8.6	8.9	8.4	8.6	6.6	5.5
9		9.9	9.4	9	8.6	8.7	6.7	5
10		9	8.5	7.6	8.3	8.4	6.2	4.1
11		8.5	8.4	8	7.5	7.4	5.4	4.3
12		9.1	8	8.2	7.2	7.2	5.3	4.3
13		8.1	6.9	7.6	6.6	6.8	5.3	4.6
	High band avg	8.6	8.2	8.2	7.8	7.9	5.9	4.6
14		8.2	7.5	7.1	6	5.5	4.2	2.4
19		9.4	8.4	7.2	6.5	6.5	4.9	1.3
27		9.2	8.5	8	6.8	6.3	8	6
35		10.3	9.7	9.1	9.5	8.1	6.2	6.6
43		9.9	9.3	7.7	8.8	8.9	6.6	6.1
52		9.8	11	9.7	9.8	9.2	8.3	7.6
60		9.5	10.2	10.1	9.6	9.5	3.8	5.7
69		0.6	0.1	0	-1	7	-2	-2
	uhf avg	8.4	8.1	7.4	7.0	7.6	5.0	4.2
	size	4.12	3.22	2.55	2.19	1.72	1.29	0.99
	length	152	133	113	94	66	52	52

Gain in db over tuned dipole
Size in square feet
Length in inches

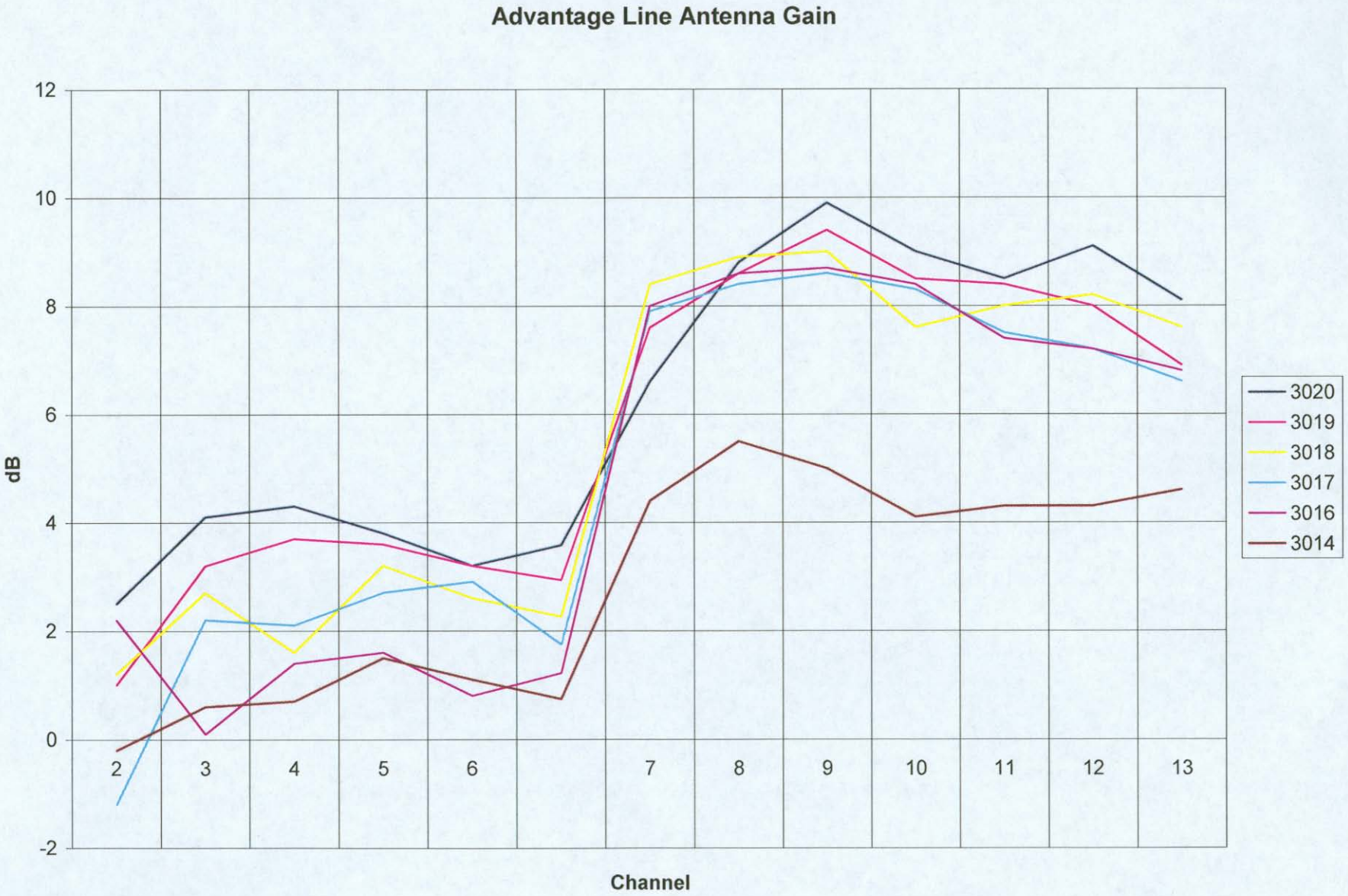
Advantage Line Antenna Gain
12
10
8
6
4
2
0
-2
dB
2
3
4
5
6
7
8
9
10
11
12
13
Channel
3020
3019
3018
3017
3016
3014

Antenna Model 2001

	Antenna Model	2001		
Channel		Gain	Length	27 inches
2		-2.8	Width	84.75 inches
3		-3.2		
4		-1.5		
5		-0.6		
6		0.2		
	Low band avg	-1.6		
7		3.1		
8		3.4		
9		2.2		
10		2.4		
11		3.8		
12		3.7		
13		1.6		
	High band avg	2.9		
14		3		
19		1.8		
27		2		
35		4.8		
43		2		
52		5.5		
60		6.8		
	uhf avg	3.7		

Gain in db over tuned dipole

Channel Master 4242 U/V Antenna

Ch	Freq	Half Power Beamwidth	F/B Ratio
2P	55.25	69	15.9
4P	67.25	69	19
6P	83.25	65	22.3
6S	87.75	71	18.6
FM	88	72	18.7
FM	98	68	13
FM	108	63	9.9
7P	175.25	24	11.9
9P	187.25	32	13.1
11P	199.25	38	16.7
13P	211.25	40	14.3
13S	215.75	35	12
	470	33	14.8
	500	50	17.7
	550	45	13.5
	600	34	13
	650	35	10.7
	700	34	18.5
	750	30	13.6
	800	24	13.2

CM 3010A

Pattern Summary

Frequency (MHz)	Channel	Half Power Beamwidth (Deg)	F/B Ratio (dB)
55.25	2	86	0.7
67.25	4	88	0.5
83.25	6	80	-1.1
	VHF L Avg=	85	VHF L Avg= 0.0
175.25	7	51	0.0
187.25	9	51	3.7
199.25	11	59	8.2
211.25	13	106	10.3
	VHF H Avg=	**66.75**	VHF H Avg= **5.6**
470	14	76	5.6
500	20	47	9.5
550	26	44	13.1
600	32	45	12.0
650	38	36	8.4
700	44	79	11.4
750	50	108	7.5
800	56	60	6.6
	UHF Avg.=	**62**	UHF Avg.= **9.3**

Gain Summary

Frequency (MHz)	Gain (dB)
55.25	-10.71
61.25	-9.31
67.25	-7.61
77.25	-3.33
83.25	-2.04
87.75	-0.94
VHF L Avg=	**-5.7**
175.25	0
181.25	0.66
187.25	1.25
193.25	2.08
199.25	0.02
205.25	-0.75
211.25	-1.10
215.75	-1.24
VHF H Avg=	**0.12**
470	-3.93
500	-2.26
550	-0.88
600	1.76
650	-2.69
700	-0.14
750	-2.60
800	-0.27
UHF Avg.=	**-1.38**

***CEMA Classification: Large Multi-Directional**

*Engineering Bulletin EIA/CEB-6-C March 26,1999

dedwards(Q:)\excel\UHFsummary sheet2

Winegard Antennas

WINEGARD®
Clearly the World's Best®

PLATINUM SERIES
HIGH DEFINITION VHF ANTENNA

engineering specifications

Model HD4053P

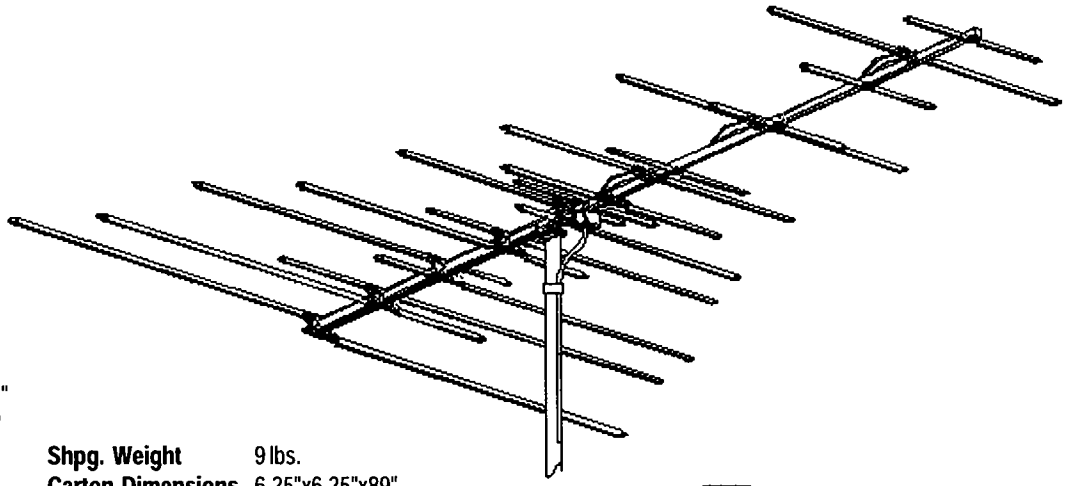

Active Elements	24		
Boom Length	111"		
Turning Radius	72.5"		
Maximum Width	110"		
Vertical Height	3"	**Shpg. Weight**	9 lbs.
Element Diameter	3/8"	**Carton Dimensions**	6.25"x6.25"x89"

Output Impedance: 75 ohm
Recommended Preamp: AP Series

"UPS in shield design is a registered trademark of United Parcel Service of America, Inc. used by permission."

Made in U.S.A.

GAIN	CH.2	CH.4	CH.6	CH.7	CH.9	CH.11	CH.13
dB over reference dipole	5.9	6.6	6.4	9.6	11.1	9.8	10.6
beamwidth at half power points	70°	69°	66°	37°	42°	43°	42°
front-to-back ratio	17dB	18dB	17dB	18dB	greater than 20dB	greater than 20dB	17dB

POLAR PATTERNS

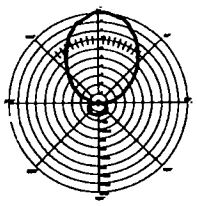
CH.2

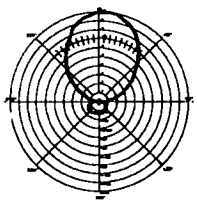
CH.4

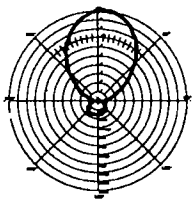
CH.6

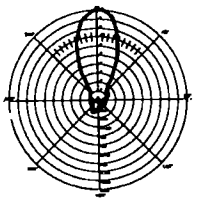
CH.7

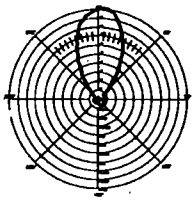
CH.9

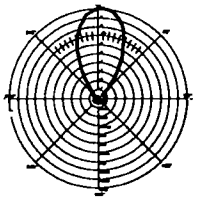
CH.11

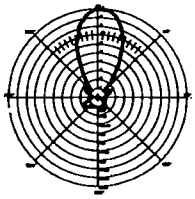
CH.13

Printed in U.S.A. Winegard Company, 3000 Kirkwood St., Burlington, IA 52601-2000 Rev. 4-02

WINEGARD®
Clearly the World's Best®

PLATINUM SERIES
HIGH DEFINITION VHF/UHF ANTENNA

engineering specifications

Model HD7210P
GHOST KILLER™

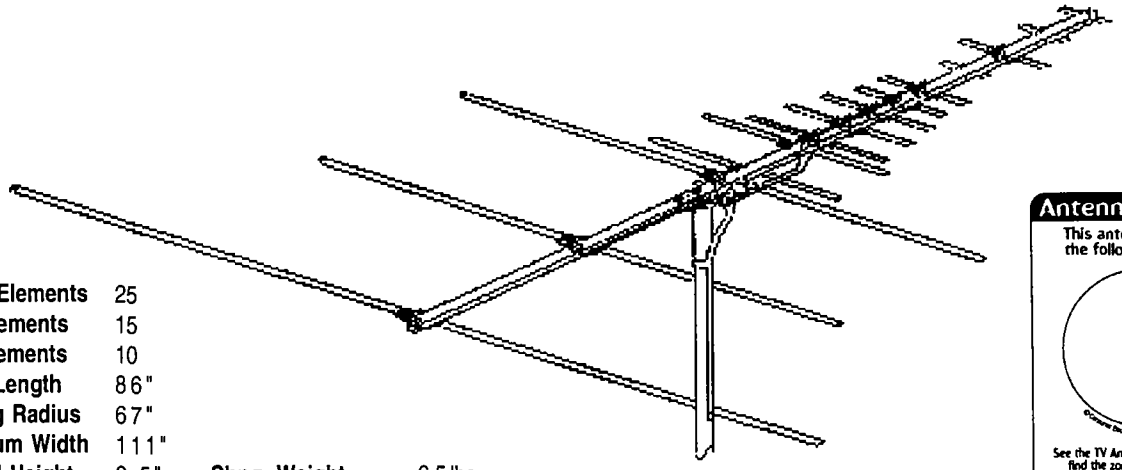

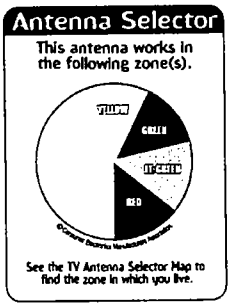

Active Elements	25		
UHF Elements	15		
VHF Elements	10		
Boom Length	86"		
Turning Radius	67"		
Maximum Width	111"		
Vertical Height	3.5"	**Shpg. Weight**	6.5 lbs.
Element Diameter	3/8"	**Carton Dimensions**	6.25"x6.25"x89"

"UPS in shield design is a registered trademark of United Parcel Service of America, Inc. used by permission."

Output Impedance: 75 ohm
Recommended Preamp: AP Series

Made in U.S.A.

CHANNEL	CH.2	CH.4	CH.6	CH.7	CH.9	CH.11	CH.13	CH.14	CH.32	CH.50	CH.69
beamwidth at half power points	73°	73°	70°	53°	50°	48°	42°	50°	50°	56°	31°
front-to-back ratio	greater than 20dB	20dB	19dB	17dB	17dB	15dB	10.5dB	8dB	17dB	13dB	9dB

POLAR PATTERNS

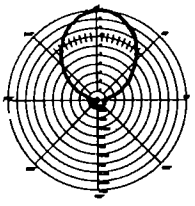
CH.2

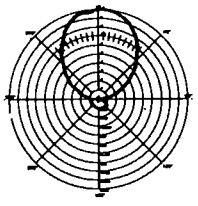
CH.4

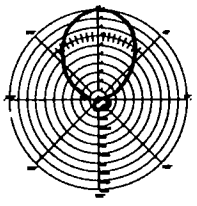
CH.6

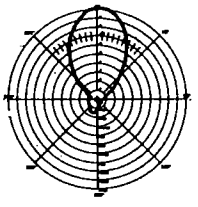
CH.7

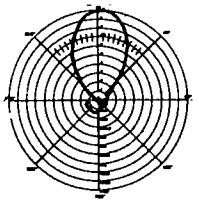
CH.9

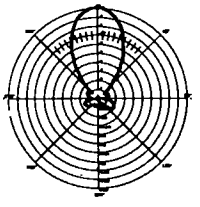
CH.11

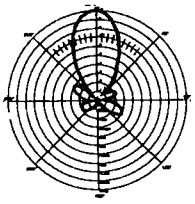
CH.13

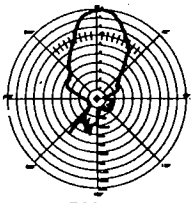
CH.14

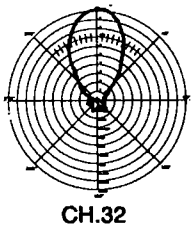
CH.32

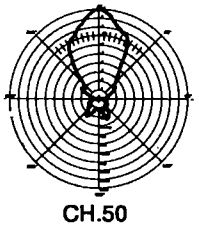
CH.50

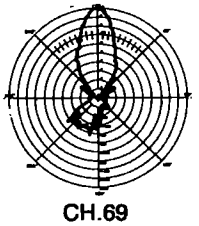
CH.69

Printed in U.S.A. Winegard Company, 3000 Kirkwood St., Burlington, IA 52601-2000 Rev. 6/02

WINEGARD®
Clearly the World's Best®

PLATINUM SERIES
HIGH DEFINITION FM ANTENNA

engineering specifications

Model HD6065P

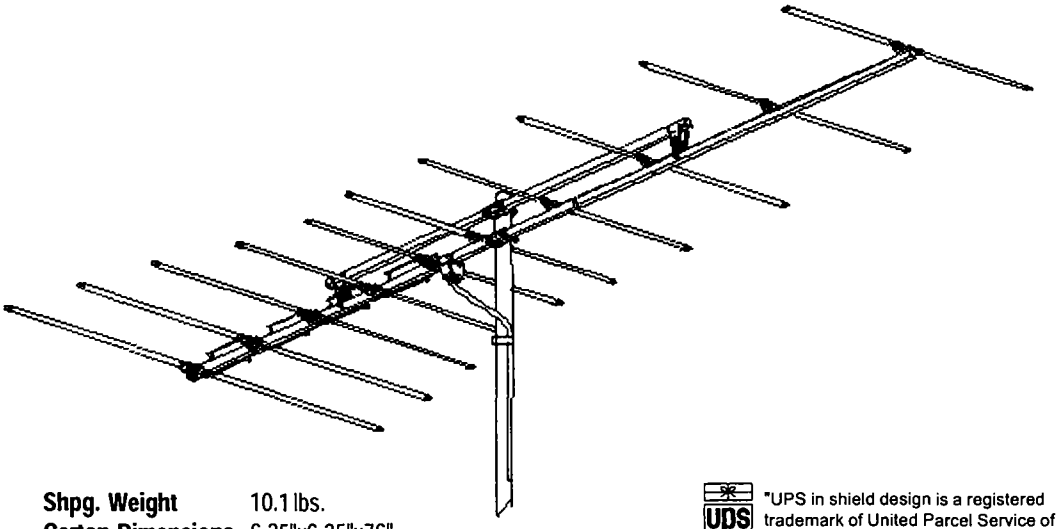

Active Elements	10		
Boom Length	127"		
Turning Radius	76"		
Maximum Width	69"		
Vertical Height	6"	**Shpg. Weight**	10.1 lbs.
Element Diameter	3/8"	**Carton Dimensions**	6.25"x6.25"x76"

"UPS in shield design is a registered trademark of United Parcel Service of America, Inc. used by permission."

Output Impedance: 75 ohm
Recommended Preamp: AP Series

Made in U.S.A.

GAIN	88MHz	98MHz	108MHz
dB over reference dipole	9.4	10.6	10.6
beamwidth at half power points	59°	53°	48°
front-to-back ratio	18dB	19dB	20dB

POLAR PATTERNS

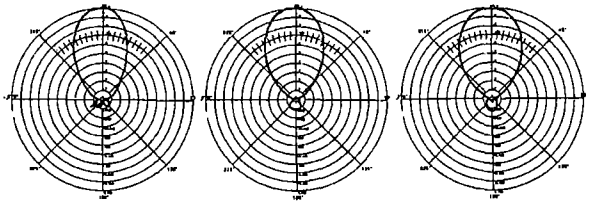

88MHz 98MHz 108MHz

Printed in U.S.A. Winegard Company, 3000 Kirkwood St., Burlington, IA 52601-2000 Rev. 4/02

WINEGARD®
Clearly the World's Best®

PLATINUM SERIES
HIGH DEFINITION VHF/UHF ANTENNA

engineering specifications

Model HD7078P

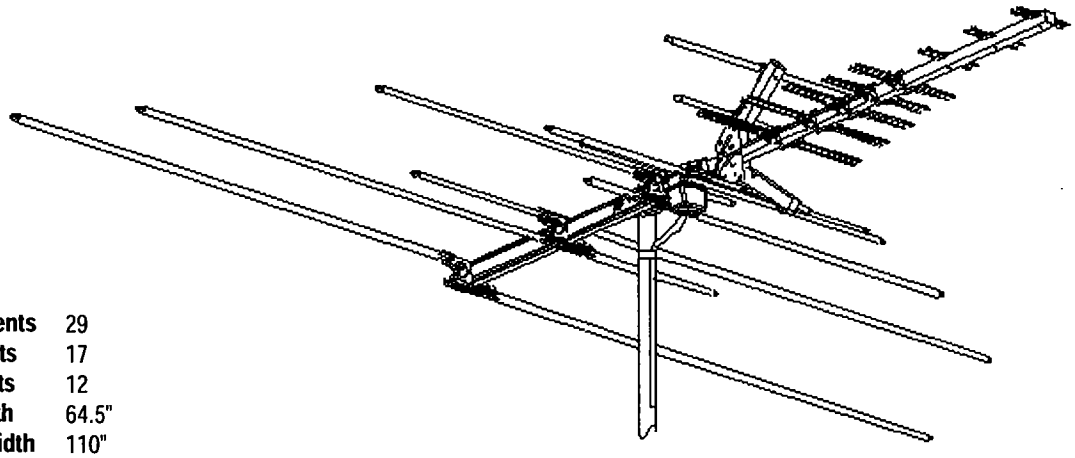

Active Elements	29
UHF Elements	17
VHF Elements	12
Boom Length	64.5"
Maximum Width	110"
Vertical Height	13.6"
Element Diameter	3/8"

Shpg. Weight	7 lbs.
Carton Dimensions	6.25"x6.25"x77"

Output Impedance:	75 ohm
Recommended Preamp:	AP Series

"UPS in shield design is a registered trademark of United Parcel Service of America, Inc. used by permission."

Made in U.S.A.

GAIN	CH.2	CH.4	CH.6	CH.7	CH.9	CH.11	CH.13	CH.14	CH.32	CH.50	CH.69
dB over reference dipole	3.5	3.4	1.6	8.3	9.6	8	9.9	11.5	10.4	10.7	9.7
beamwidth at half power points	70°	73°	70°	37°	38°	39°	37°	61°	54°	46°	34°
front-to-back ratio	10.5dB	7dB	7.5dB	13dB	16dB	15dB	16dB	16dB	greater than 20dB	19dB	18dB

POLAR PATTERNS

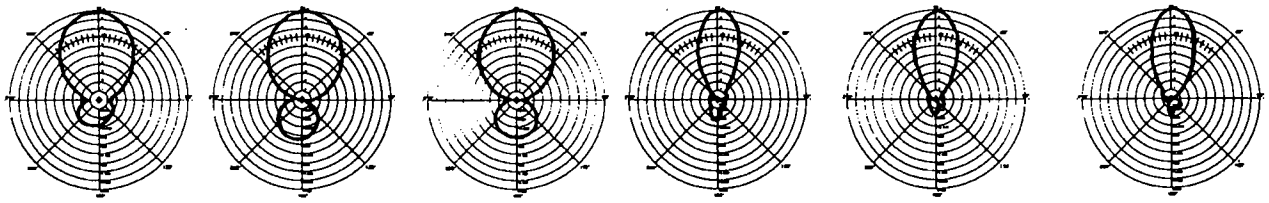

CH.2 CH. 4 CH.6 CH.7 CH.9 CH.11

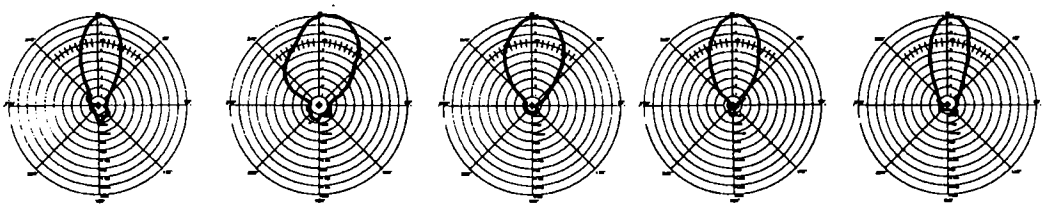

CH.13 CH.14 CH.32 CH.50 CH.69

Printed in U.S.A. Winegard Company, 3000 Kirkwood St., Burlington, IA 52601-2000 Rev. 4/02

WINEGARD®
Clearly the World's Best®

PLATINUM SERIES
HIGH DEFINITION VHF/UHF ANTENNA

engineering specifications

Model HD7080P

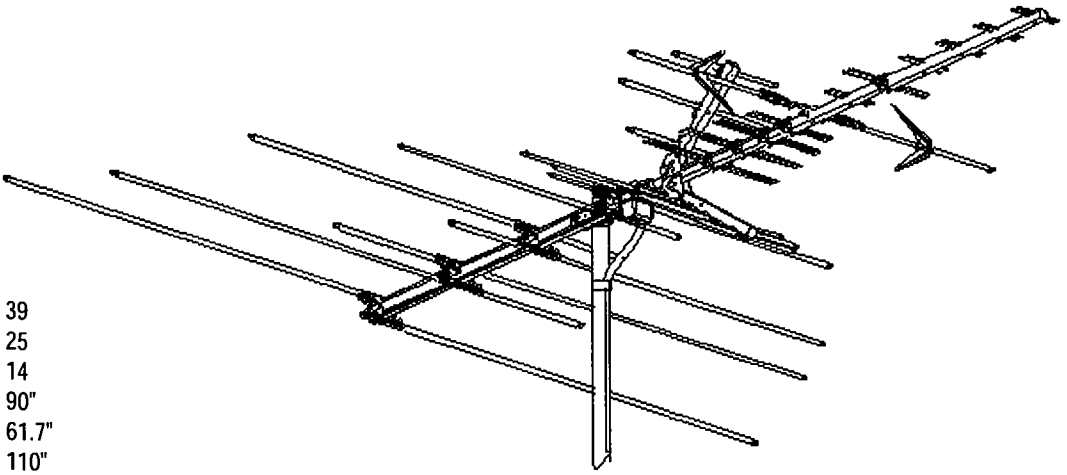

Active Elements	39		
UHF Elements	25		
VHF Elements	14		
Boom Length	90"		
Turning Radius	61.7"		
Maximum Width	110"		
Vertical Height	19.3"	**Shpg. Weight**	9.5 lbs.
Element Diameter	3/8"	**Carton Dimensions**	6.25"x6.25"x101"

Output Impedance: 75 ohm
Recommended Preamp: AP Series

"UPS in shield design is a registered trademark of United Parcel Service of America, Inc. used by permission."

Made in U.S.A.

GAIN	CH.2	CH.4	CH.6	CH.7	CH.9	CH.11	CH.13	CH.14	CH.32	CH.50	CH.69
dB over reference dipole	5.1	5	2.8	7.6	9.5	9.2	11	11.7	11.4	11	10.2
beamwidth at half power points	75°	77°	77°	36°	42°	45°	39°	45°	46°	41°	35°
front-to-back ratio	13dB	13dB	11dB	15dB	19dB	greater than 20dB	greater than 18dB	13dB	greater than 20dB	20dB	14dB

POLAR PATTERNS

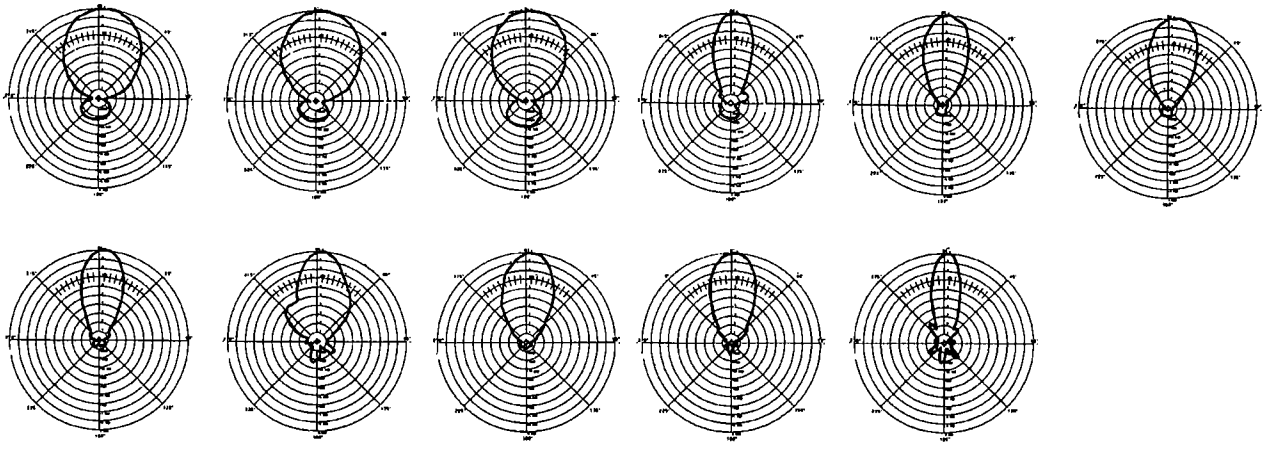

Printed in U.S.A. Winegard Company, 3000 Kirkwood St., Burlington, IA 52601-2000 Rev. 4/02

WINEGARD®
Clearly the World's Best®

PLATINUM SERIES
HIGH DEFINITION VHF/UHF ANTENNA

engineering specifications

Model HD7082P

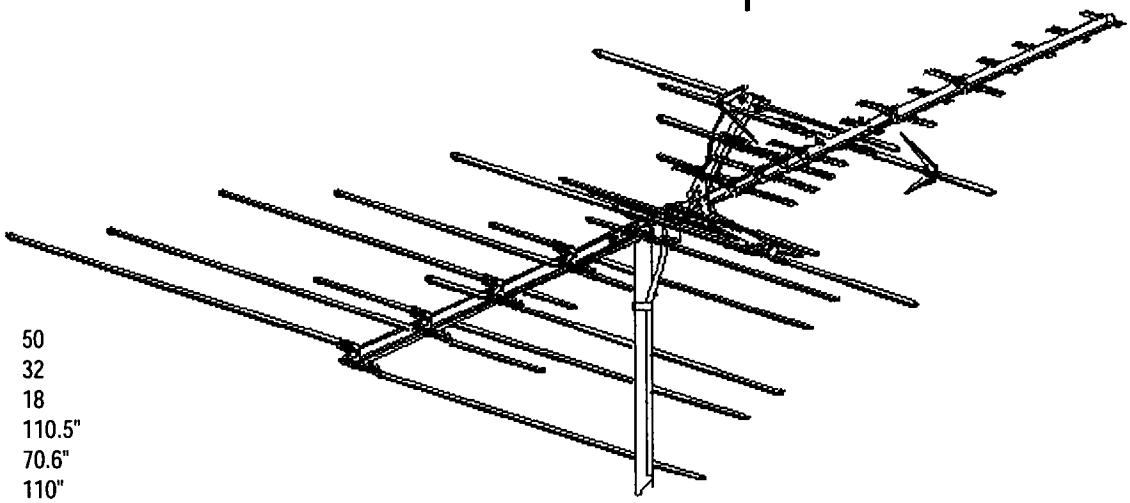

Active Elements	50		
UHF Elements	32		
VHF Elements	18		
Boom Length	110.5"		
Turning Radius	70.6"		
Maximum Width	110"		
Vertical Height	19.3"	**Shpg. Weight**	10.8 lbs.
Element Diameter	3/8"	**Carton Dimensions**	6.25"x6.25"x89"

"UPS in shield design is a registered trademark of United Parcel Service of America, Inc. used by permission."

Output Impedance: 75 ohm
Recommended Preamp: AP Series

Made in U.S.A.

GAIN	CH.2	CH.4	CH.6	CH.7	CH.9	CH.11	CH.13	CH.14	CH.32	CH.50	CH.69
dB over reference dipole	6.4	6.4	6.2	10	10.9	10.2	10	13	12.2	10.8	12.2
beamwidth at half power points	76°	71°	73°	35°	40°	44°	51°	31°	40°	39°	21°
front-to-back ratio	15dB	20dB	19dB	13dB	20dB	20dB	greater than 20dB	10.5dB	greater than 20dB	20dB	16dB

POLAR PATTERNS

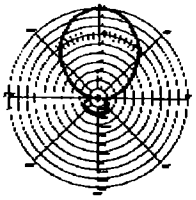
CH.2

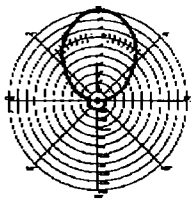
CH.4

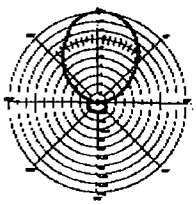
CH.6

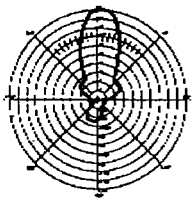
CH.7

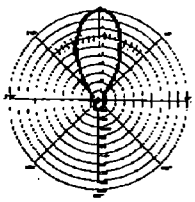
CH.9

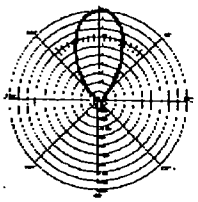
CH.11

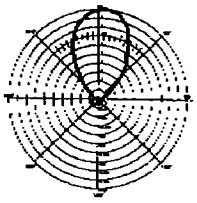
CH.13

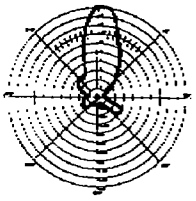
CH.14

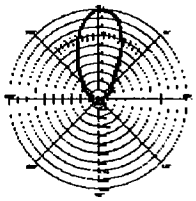
CH.32

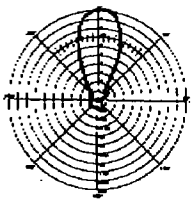
CH.50

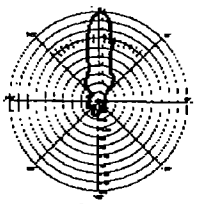
CH.69

Printed in U.S.A. Winegard Company, 3000 Kirkwood St., Burlington, IA 52601-2000 Rev. 4/02

WINEGARD®
Clearly the World's Best®

PLATINUM SERIES
HIGH DEFINITION VHF/UHF ANTENNA

engineering specifications

Model HD7084P

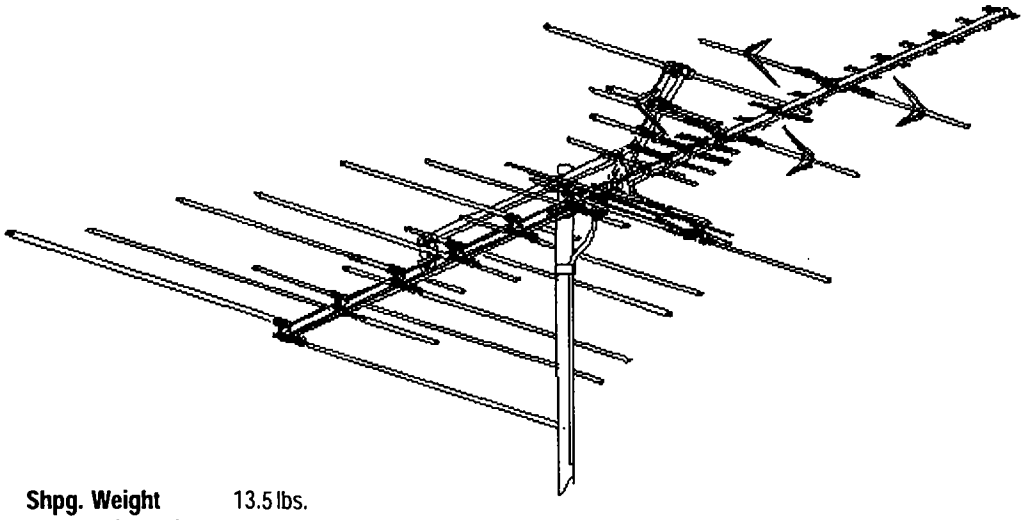

Active Elements	68		
UHF Elements	40		
VHF Elements	28		
Boom Length	131"		
Turning Radius	81"		
Maximum Width	110"		
Vertical Height	25.5"	**Shpg. Weight**	13.5 lbs.
Element Diameter	3/8"	**Carton Dimensions**	6.25"x6.25"x104.25"

Output Impedance: 75 ohm
Recommended Preamp: AP Series

"UPS in shield design is a registered trademark of United Parcel Service of America, Inc. used by permission."

Made in U.S.A.

GAIN	CH.2	CH.4	CH.6	CH.7	CH.9	CH.11	CH.13	CH.14	CH.32	CH.50	CH.69
dB over reference dipole	6.2	7.2	7.6	10.9	12	10.9	10.8	14.6	12.1	11.8	10.2
beamwidth at half power points	69°	68°	68°	31°	33°	46°	34°	42°	41°	36°	22°
front-to-back ratio	20dB	greater than 20dB	greater than 20dB	19dB	17dB	15dB	17dB	11dB	20dB	20dB	12dB

POLAR PATTERNS

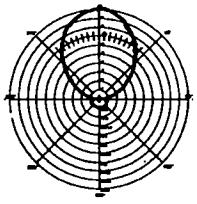
CH.2

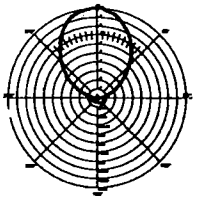
CH. 4

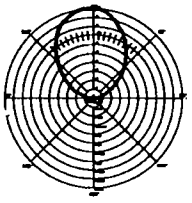
CH.6

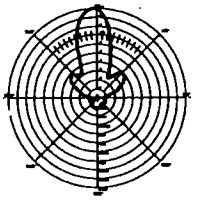
CH.7

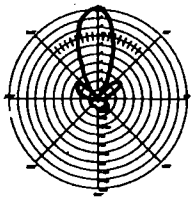
CH.9

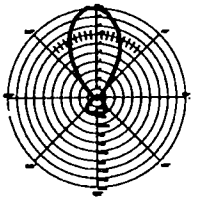
CH.11

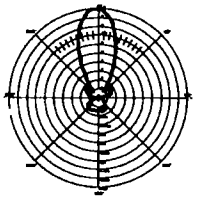
CH.13

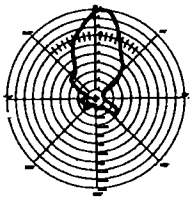
CH.14

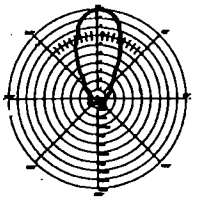
CH.32

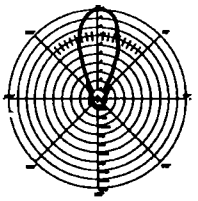
CH.50

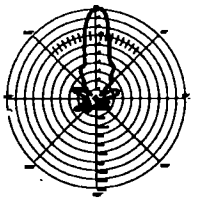
CH.69

Printed in U.S.A. Winegard Company, 3000 Kirkwood St., Burlington, IA 52601-2000 Rev. 4-02

WINEGARD®
Clearly the World's Best®

PLATINUM SERIES
HIGH DEFINITION VHF/UHF ANTENNA

engineering specifications

Model HD8200P

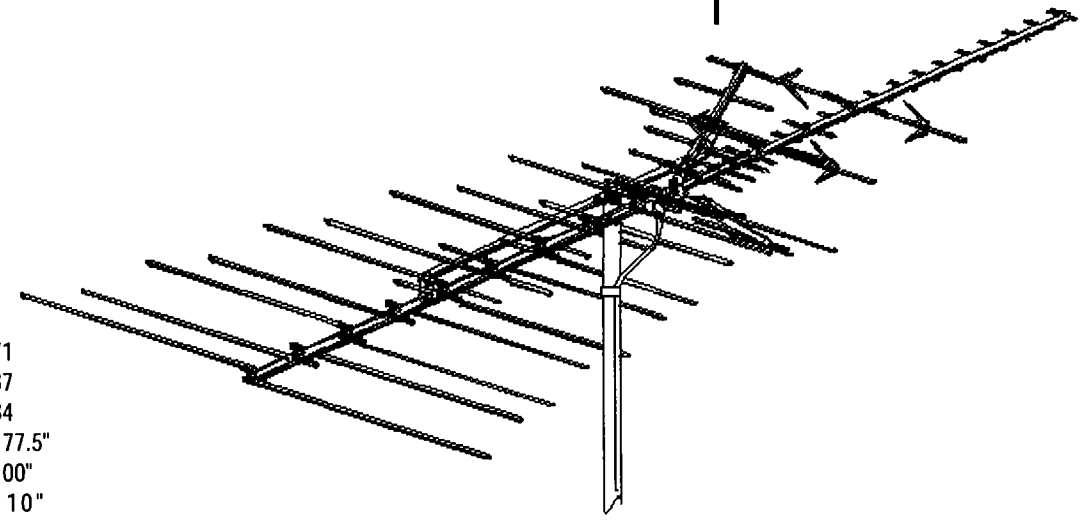

Active Elements	71		
UHF Elements	37		
VHF Elements	34		
Boom Length	177.5"		
Turning Radius	100"		
Maximum Width	110"		
Vertical Height	31.5"	**Shpg. Weight**	17 lbs.
Element Diameter	3/8"	**Carton Dimensions**	6.25"x6.25"x122"

Output Impedance: 75 ohm
Recommended Preamp: AP Series

Made in U.S.A.

GAIN	CH.2	CH.4	CH.6	CH.7	CH.9	CH.11	CH.13	CH.14	CH.32	CH.50	CH.69
dB over reference dipole	7	7.7	6.4	10.4	12.6	11	12	14.2	13.7	12.2	13
beamwidth at half power points	68°	68°	66°	29°	34°	42°	41°	40°	41°	33°	23°
front-to-back ratio	greater than 20dB	greater than 20dB	greater than 20dB	greater than 20dB	greater than 20dB	19dB	18dB	13dB	20dB	greater than 20dB	10.5dB

POLAR PATTERNS

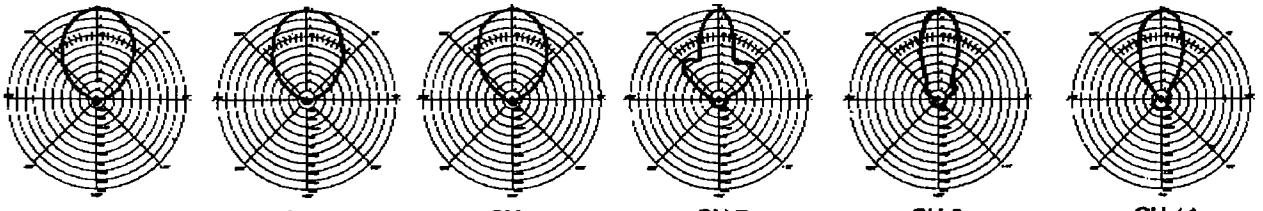

CH.2 CH.4 CH.6 CH.7 CH.9 CH.11

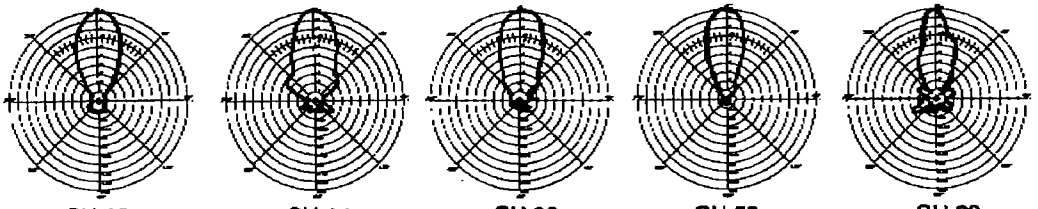

CH.13 CH.14 CH.32 CH.50 CH.69

Printed in U.S.A. Winegard Company, 3000 Kirkwood St., Burlington, IA 52601-2000 Rev. 4/02

WINEGARD®
Clearly the World's Best®

PLATINUM SERIES
HIGH DEFINITION UHF ANTENNA

engineering specifications

Model HD9065P

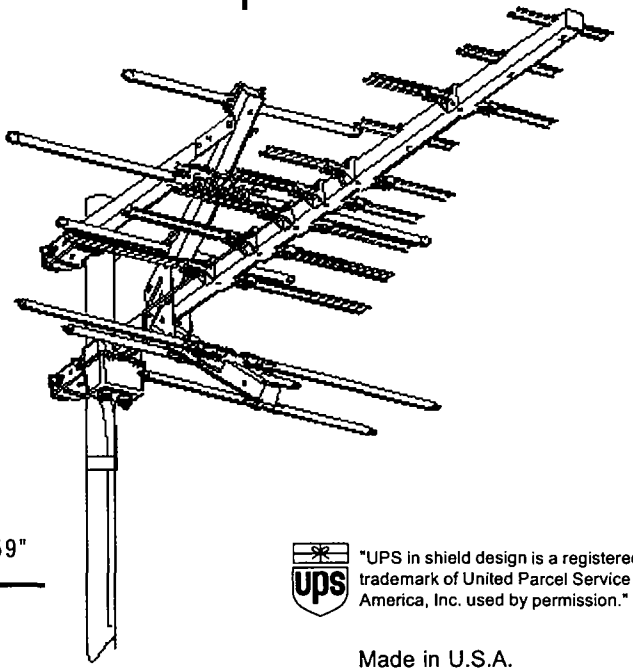

Active Elements	23		
Boom Length	50"		
Turning Radius	47.7"		
Maximum Width	27"		
Vertical Height	19"	**Shpg. Weight**	6 lbs.
Element Diameter	3/8"	**Carton Dimensions**	6.25"x6.25"x59"

Output Impedance: 75 ohm
Recommended Preamp: AP Series

"UPS in shield design is a registered trademark of United Parcel Service of America, Inc. used by permission."

Made in U.S.A.

CHANNEL	CH.14	CH.32	CH.50	CH.69
dB gain over reference dipole	11.9	12.1	11.6	10.6
beamwidth at half power points	52°	53°	40°	31°
front-to-back ratio	14dB	19dB	14dB	17dB

POLAR PATTERNS

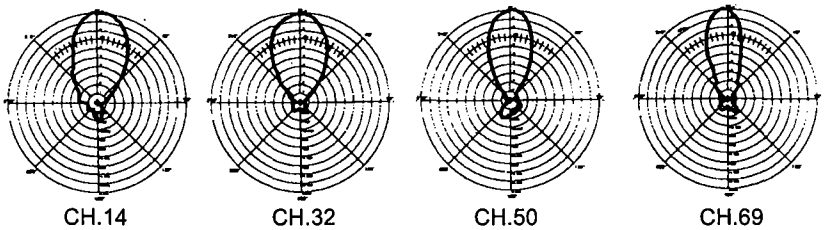

CH.14 CH.32 CH.50 CH.69

Printed in U.S.A. Winegard Company, 3000 Kirkwood St., Burlington, IA 52601-2000 Rev. 2/02

WINEGARD®
Clearly the World's Best®

PLATINUM SERIES
HIGH DEFINITION UHF ANTENNA

engineering specifications

Model HD9085P

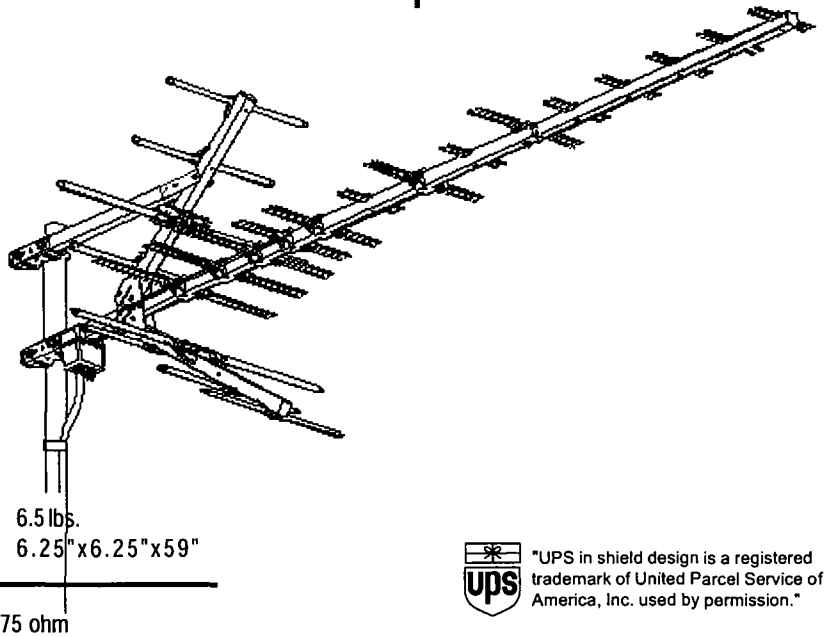

Active Elements	31		
Boom Length	75"		
Turning Radius	72.75"		
Maximum Width	27"		
Vertical Height	25.5"	**Shpg. Weight**	6.5 lbs.
Element Diameter	3/8"	**Carton Dimensions**	6.25"x6.25"x59"

Output Impedance: 75 ohm
Recommended Preamp: AP Series

"UPS in shield design is a registered trademark of United Parcel Service of America, Inc. used by permission."

Made in U.S.A.

CHANNEL	CH.14	CH.32	CH.50	CH.69
dB gain over reference dipole	11.9	14.6	14.5	12.8
beamwidth at half power points	45°	44°	32°	23°
front-to-back ratio	14dB	18dB	12dB	9dB

POLAR PATTERNS

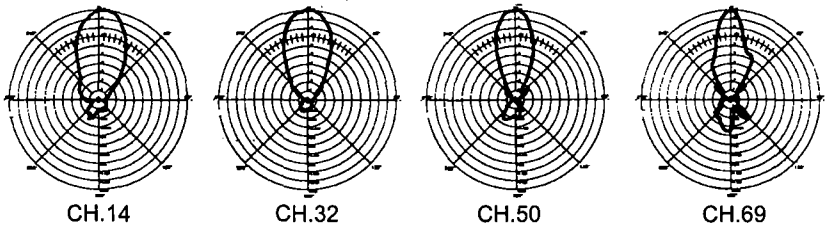

CH.14 CH.32 CH.50 CH.69

Printed in U.S.A. Winegard Company, 3000 Kirkwood St., Burlington, IA 52601-2000 Rev. 2/02

WINEGARD®
Clearly the World's Best®

PLATINUM SERIES
HIGH DEFINITION UHF ANTENNA

engineering specifications

Model HD9095P

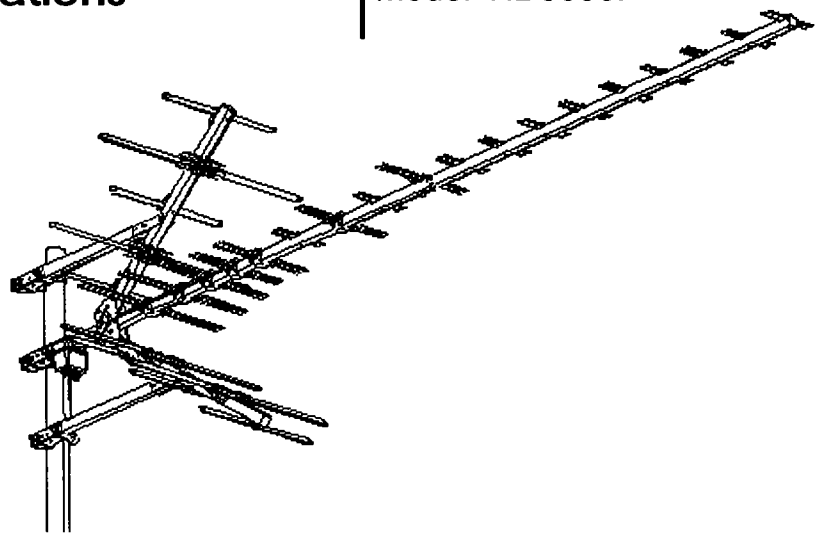

Active Elements	39		
Boom Length	95"		
Turning Radius	92.75"		
Maximum Width	27"		
Vertical Height	31.75"	**Shpg. Weight**	8 lbs.
Element Diameter	3/8"	**Carton Dimensions**	6.25"x6.25"x59"

Output Impedance: 75 ohm
Recommended Preamp: AP Series

"UPS in shield design is a registered trademark of United Parcel Service of America, Inc. used by permission."

Made in U.S.A.

CHANNEL	CH.14	CH.32	CH.50	CH.69
dB gain over reference dipole	14.2	16	15.5	12.2
beamwidth at half power points	43°	41°	30°	34°
front-to-back ratio	11dB	14dB	11dB	8dB

POLAR PATTERNS

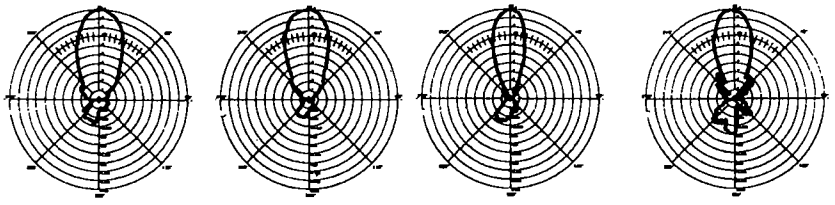

CH.14 CH.32 CH.50 CH.69

Printed in U.S.A. Winegard Company, 3000 Kirkwood St., Burlington, IA 52601-2000 Rev. 2/02

WINEGARD®
Clearly the World's Best®

PROSTAR® 1000 UHF ANTENNA

engineering specifications

Model PR-9012

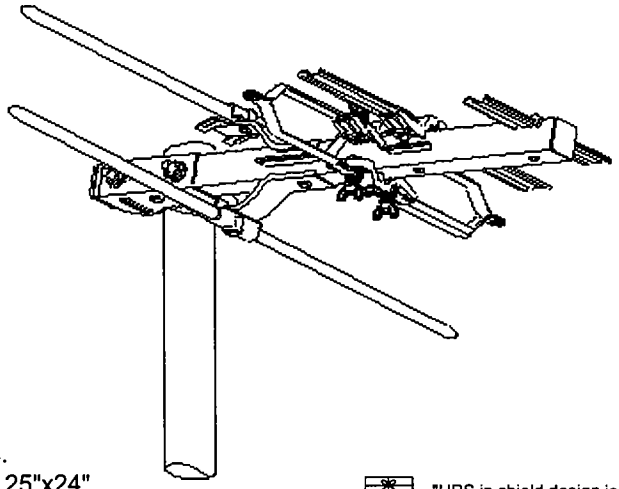

Active Elements	5		
Boom Length	17"		
Turning Radius	15.5"		
Maximum Width	22"		
Vertical Height	4"	**Shpg. Weight**	2 lbs.
Element Diameter	3/8"	**Carton Dimensions**	4"x6.25"x24"

"UPS in shield design is a registered trademark of United Parcel Service of America, Inc. used by permission."

Output Impedance: 300 ohm / 75 ohm with included matching transformer
Recommended Preamp: AP Series

CHANNEL	CH.14	CH.20	CH.26	CH.32	CH.38	CH.44	CH.50	CH.56	CH.62	CH.69
dB gain over reference dipole	3.3	3.9	4.0	5.0	6.4	6.2	6.0	6.2	6.4	6.2
beamwidth at half power points	71°	68°	63°	73°	59°	57°	58°	60°	45°	58°
front-to-back ratio	12dB	5dB	11dB	9dB	10.5dB	10dB	9dB	35dB	9dB	3.5dB

POLAR PATTERNS

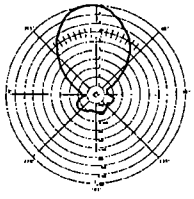
CH.14

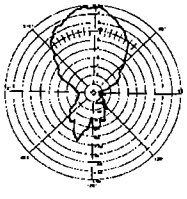
CH. 20

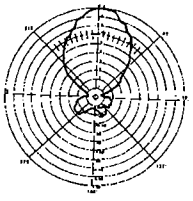
CH.26

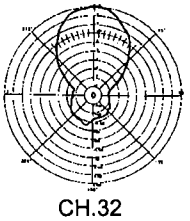
CH.32

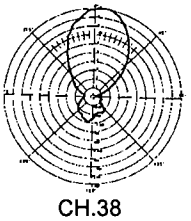
CH.38

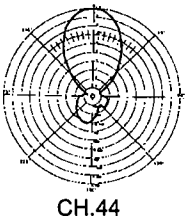
CH.44

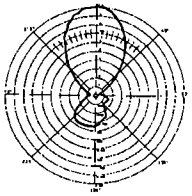
CH.50

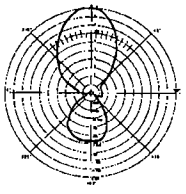
CH.56

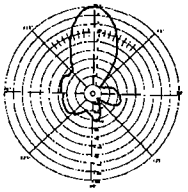
CH.62

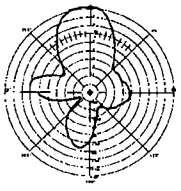
CH.69

Printed in U.S.A. Winegard Company, 3000 Kirkwood St., Burlington, IA 52601-2000 Rev. 1/02

WINEGARD®
Clearly the World's Best®

PROSTAR® 1000 UHF ANTENNA

engineering specifications

Model PR-9014

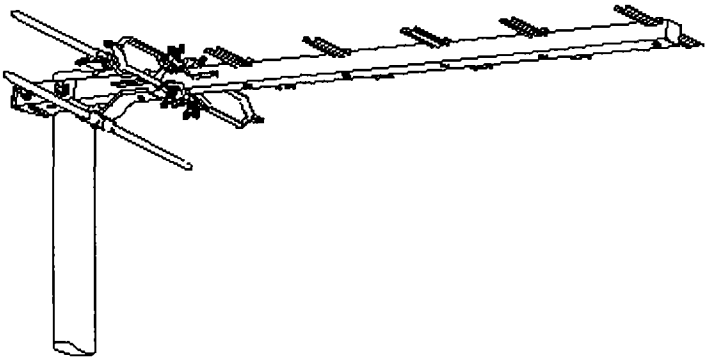

Active Elements	8		
Boom Length	39.875"		
Turning Radius	38"		
Maximum Width	15"		
Vertical Height	4"	**Shpg. Weight**	7.5 lbs.
Element Diameter	3/8"	**Carton Dimensions**	4"x6.25"x43"

"UPS in shield design is a registered trademark of United Parcel Service of America, Inc. used by permission."

Output Impedance: 300 ohm / 75 ohm with included transformer
Recommended Preamp: AP Series

Made in U.S.A.

CHANNEL	CH.14	CH.32	CH.50	CH.69
dB gain over reference dipole	8.3dB	7.2dB	8.6dB	6.4dB
beamwidth at half power points	65°	62°	50°	35°
front-to-back ratio	15dB	12dB	17dB	14dB

POLAR PATTERNS

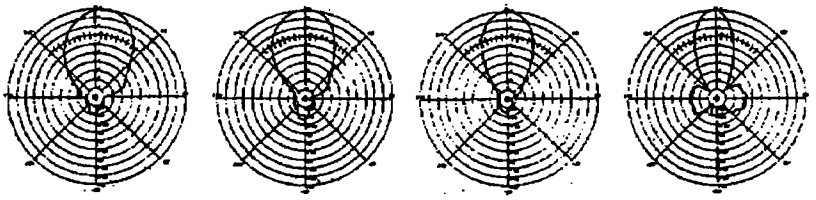

CH.14 CH. 32 CH.50 CH.69

Printed in U.S.A. Winegard Company, 3000 Kirkwood St., Burlington, IA 52601-2000

WINEGARD®
Clearly the World's Best®

PROSTAR® 1000 UHF ANTENNA

engineering specifications

Model PR-9016

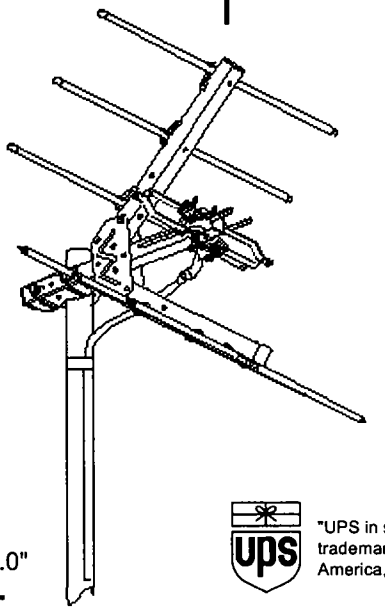

Active Elements	7		
Boom Length	15.75"		
Turning Radius	17.75"		
Maximum Width	22"		
Vertical Height	19"	**Shpg. Weight**	3.0 lbs.
Element Diameter	3/8"	**Carton Dimensions**	6.25"x4.25"x32.0"

"UPS in shield design is a registered trademark of United Parcel Service of America, Inc. used by permission."

Output Impedance: 300 ohm / 75 ohm with included transformer

Recommended Preamp: AP Series

Made in U.S.A.

GAIN	CH.14	CH.26	CH.38	CH.50	CH.62	CH.69
dB over reference dipole	5.8dB	6.5dB	7.5dB	8.0dB	8.0dB	7.7dB
beamwidth at half power points	59°	60°	54°	47°	39°	32°
front-to-back ratio	6dB	12dB	14dB	10.5dB	12.5dB	5.5dB

POLAR PATTERNS

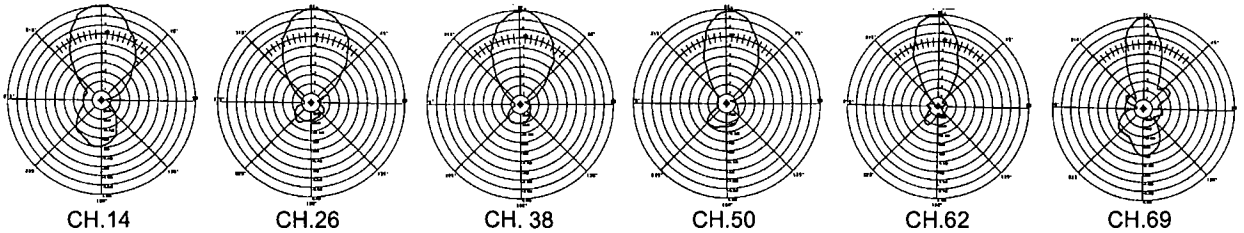

CH.14 CH.26 CH. 38 CH.50 CH.62 CH.69

Printed in U.S.A. Winegard Company, 3000 Kirkwood St., Burlington, IA 52601-2000 Rev. 1/02

WINEGARD®
Clearly the World's Best®

PROSTAR® 1000 UHF ANTENNA

engineering specifications

Model PR-9018

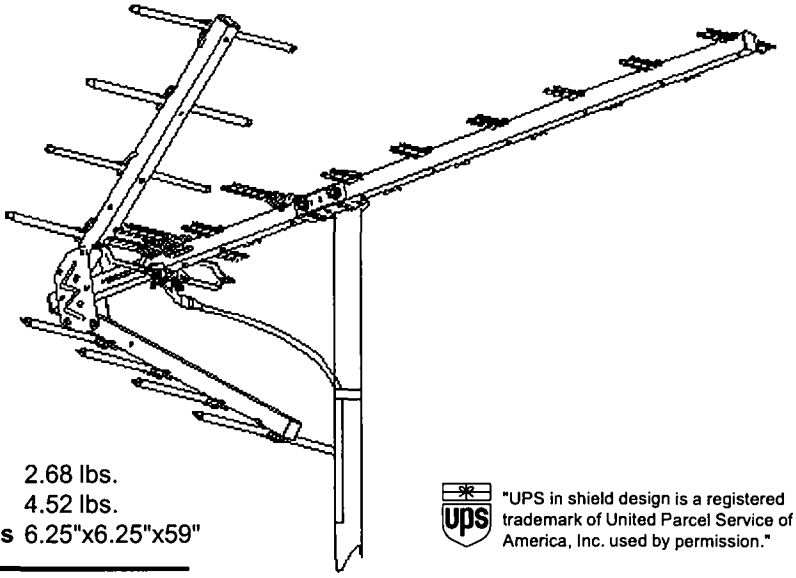

Active Elements	20		
Boom Length	49.875"		
Turning Radius	30"		
Maximum Width	15"	**Net Weight**	2.68 lbs.
Vertical Height	25.5"	**Shpg. Weight**	4.52 lbs.
Element Diameter	3/8"	**Carton Dimensions**	6.25"x6.25"x59"

"UPS in shield design is a registered trademark of United Parcel Service of America, Inc. used by permission."

Output Impedance: 300 ohm / 75 ohm with included transformer

Recommended Preamp: AP Series

Made in U.S.A.

CHANNEL	CH.14	CH.32	CH.50	CH.69
dB gain over reference dipole	13.3	14.5	12.6	9
beamwidth at half power points	60°	55°	40°	26°
front-to-back ratio	13.5dB	14dB	19.5dB	6dB

POLAR PATTERNS

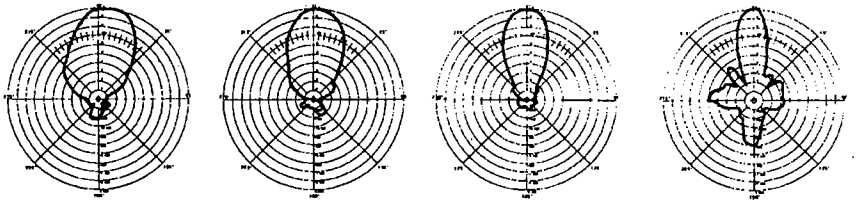

CH.14 CH. 32 CH.50 CH.69

Printed in U.S.A. Winegard Company, 3000 Kirkwood St., Burlington, IA 52601-2000 Rev. 6/01

WINEGARD®
Clearly the World's Best®

PROSTAR® 1000 UHF ANTENNA

engineering specifications

Model PR-9022

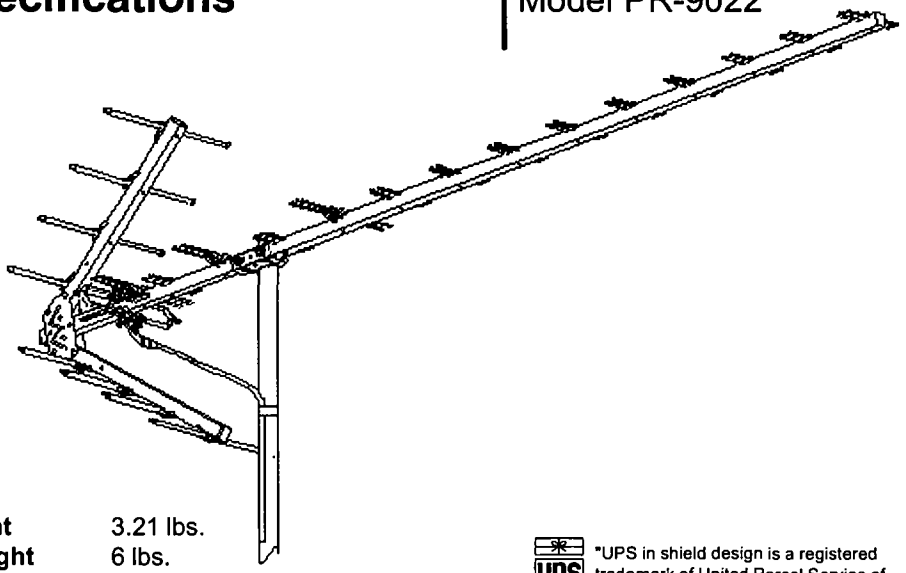

Active Elements	26		
Boom Length	78.5"		
Turning Radius	58.5"		
Maximum Width	15"	**Net. Weight**	3.21 lbs.
Vertical Height	25.5"	**Shpg. Weight**	6 lbs.
Element Diameter	3/8"	**Carton Dimensions**	6.25"x6.25"x89"

"UPS in shield design is a registered trademark of United Parcel Service of America, Inc. used by permission."

Output Impedance: 300 ohm / 75 ohm with included transformer

Recommended Preamp: AP Series

Made in U.S.A.

CHANNEL	CH.14	CH.32	CH.50	CH.69
dB gain over reference dipole	14.3	15.2	14.6	9.9
beamwidth at half power points	54°	43°	34°	23°
front-to-back ratio	13.5dB	16dB	18dB	13dB

POLAR PATTERNS

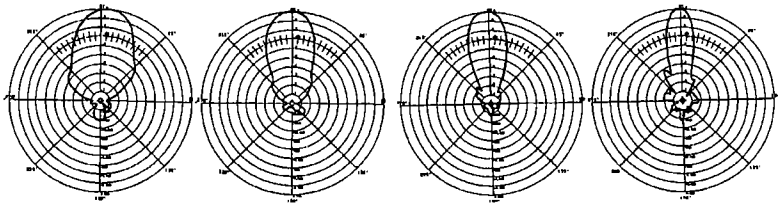

CH.14 CH. 32 CH.50 CH.69

Printed in U.S.A. Winegard Company, 3000 Kirkwood St., Burlington, IA 52601-2000 Rev. 6/01

WINEGARD®
Clearly the World's Best®

PROSTAR® 1000 UHF ANTENNA

engineering specifications

Model PR-9032

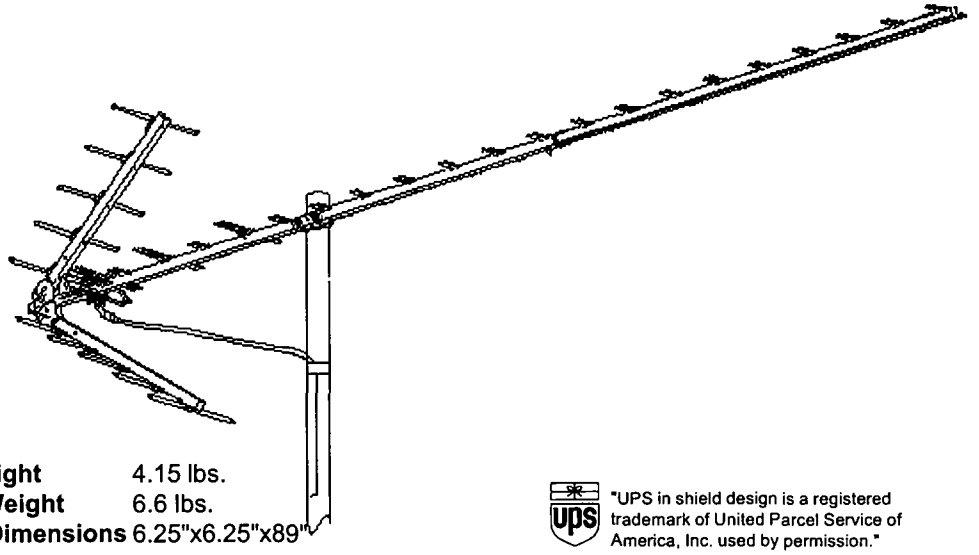

Active Elements	35		
Boom Length	114.5"		
Turning Radius	79.75"		
Maximum Width	15"	**Net. Weight**	4.15 lbs.
Vertical Height	31.5"	**Shpg. Weight**	6.6 lbs.
Element Diameter	3/8"	**Carton Dimensions**	6.25"x6.25"x89"

"UPS in shield design is a registered trademark of United Parcel Service of America, Inc. used by permission."

Output Impedance: 300 ohm / 75 ohm with included transformer

Recommended Preamp: AP Series

Made in U.S.A.

CHANNEL	CH.14	CH.32	CH.50	CH.69
dB gain over reference dipole	14.9	16.3	15.7	11.5
beamwidth at half power points	53°	37°	28°	26°
front-to-back ratio	14dB	20dB	20dB	7.5dB

POLAR PATTERNS

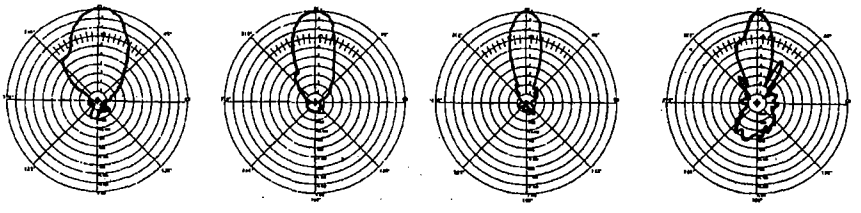

CH.14 CH. 32 CH.50 CH.69

Printed in U.S.A. Winegard Company, 3000 Kirkwood St., Burlington, IA 52601-2000 Rev. 6/01

WINEGARD®
Clearly the World's Best®

PROSTAR® UHF ANTENNA

engineering specifications

Model PR-4400

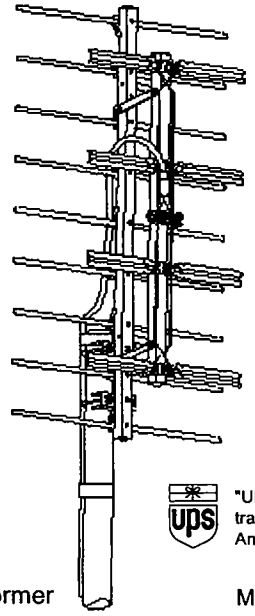

Active Elements	13		
Turning Radius	11.25"		
Maximum Width	22"		
Vertical Height	34"	**Shpg. Weight**	4.64 lbs.
Element Diameter	3/8"	**Carton Dimensions**	6.5"x6.5"x59"

"UPS in shield design is a registered trademark of United Parcel Service of America, Inc. used by permission."

Output Impedance: 300 ohm / 75 ohm with included transformer

Recommended Preamp: AP Series

Made in U.S.A.

GAIN	CH.14	CH.32	CH.50	CH.69
dB over reference dipole	9dB	10dB	10.6dB	11.6dB
beamwidth at half power points	72°	60°	46°	47°
front-to-back ratio	-17dB	-14dB	-13dB	-9dB

POLAR PATTERNS

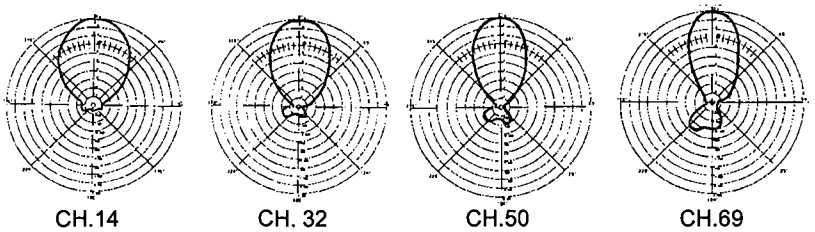

CH.14 CH. 32 CH.50 CH.69

Printed in U.S.A. Winegard Company, 3000 Kirkwood St., Burlington, IA 52601-2000

WINEGARD®
Clearly the World's Best®

PROSTAR® 1000 UHF ANTENNA

engineering specifications

Model PR-8800

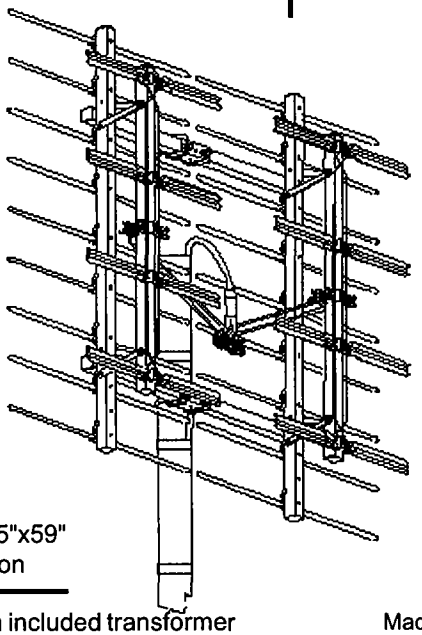

Active Elements	26		
Turning Radius	23"		
Maximum Width	45"	**Shpg. Weight**	8 lbs.
Vertical Height	34"	**Carton Dimensions**	6.25"x6.25"x59"
Element Diameter	3/8"		1 per Carton

"UPS in shield design is a registered trademark of United Parcel Service of America, Inc. used by permission."

Output Impedance: 300 ohm / 75 ohm with included transformer

Recommended Preamp: AP Series

Made in U.S.A.

GAIN	CH.14	CH.32	CH.50	CH.69
dB over reference dipole	10.7dB	12.0dB	11.0dB	12.5dB
beamwidth at half power points	32°	23°	20°	17°
front-to-back ratio	-9dB	-17dB	-11dB	-9dB

POLAR PATTERNS

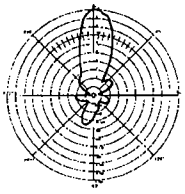

CH.14

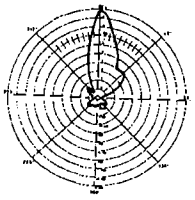

CH. 32

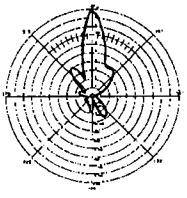

CH.50

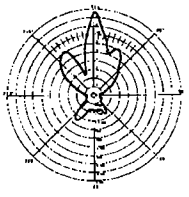

CH.69

Printed in U.S.A. Winegard Company, 3000 Kirkwood St., Burlington, IA 52601-2000

WINEGARD®
Clearly the World's Best®

PROSTAR® 1000 VHF/UHF/FM ANTENNA

engineering specifications

Model PR-5646

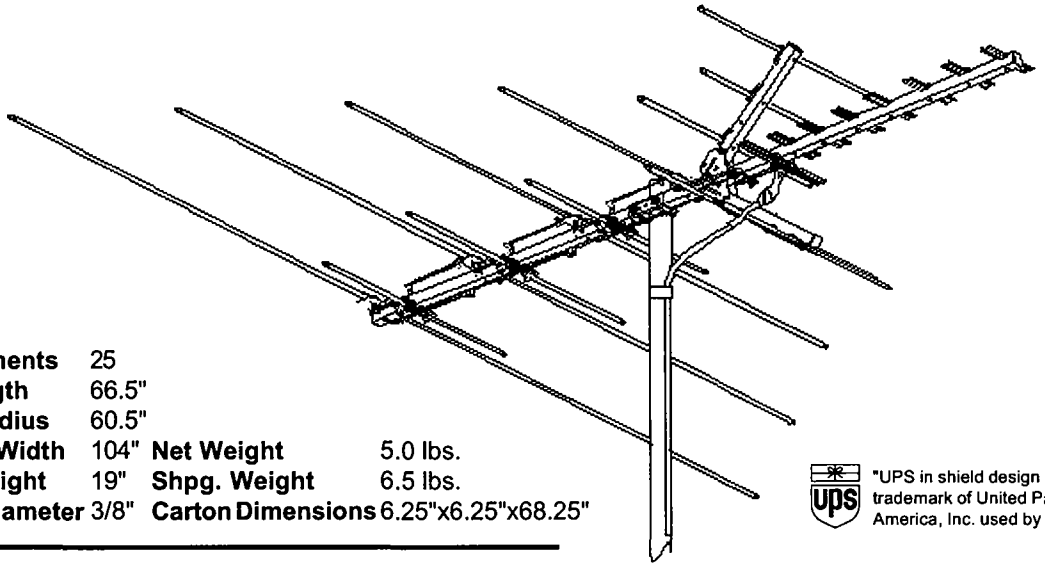

Active Elements	25		
Boom Length	66.5"		
Turning Radius	60.5"		
Maximum Width	104"	**Net Weight**	5.0 lbs.
Vertical Height	19"	**Shpg. Weight**	6.5 lbs.
Element Diameter	3/8"	**Carton Dimensions**	6.25"x6.25"x68.25"

"UPS in shield design is a registered trademark of United Parcel Service of America, Inc. used by permission."

Output Impedance: 300 ohm / 75 ohm with included transformer

Recommended Preamp: AP Series

Made in U.S.A.

CHANNEL	CH.2	CH.4	CH.6	CH.7	CH.9	CH.11	CH.13	CH.14	CH.32	CH.50	CH.69
dB gain over reference dipole	3.0	3.5	2.2	7.1	7.4	7.7	7.2	9.0	9.4	9.4	7.8
beamwidth at half power points	77°	76°	74°	36°	39°	40°	40°	52°	50°	46°	31°
front-to-back ratio	3.5dB	7dB	9dB	9dB	7dB	8.5dB	13dB	8dB	19dB	17dB	11dB

POLAR PATTERNS

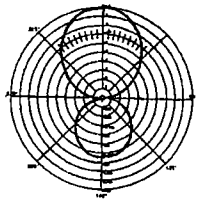
CH.2

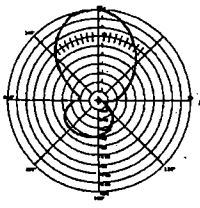
CH. 4

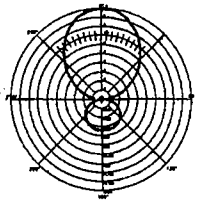
CH.6

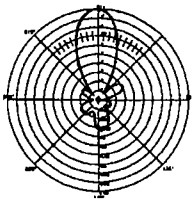
CH.7

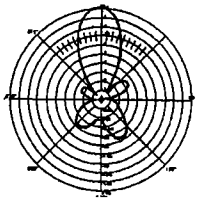
CH.9

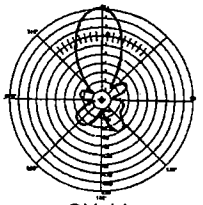
CH.11

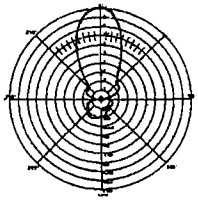
CH.13

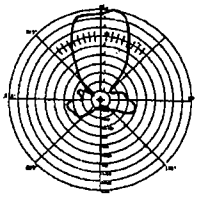
CH.14

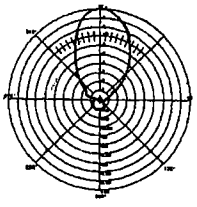
CH.32

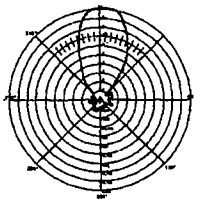
CH.50

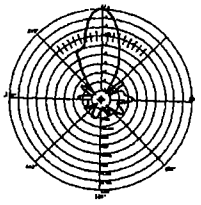
CH.69

Printed in U.S.A. Winegard Company, 3000 Kirkwood St., Burlington, IA 52601-2000 Rev. 1/02

WINEGARD®
Clearly the World's Best®

PROSTAR® 1000 VHF/UHF/FM ANTENNA

engineering specifications

Model PR-7000

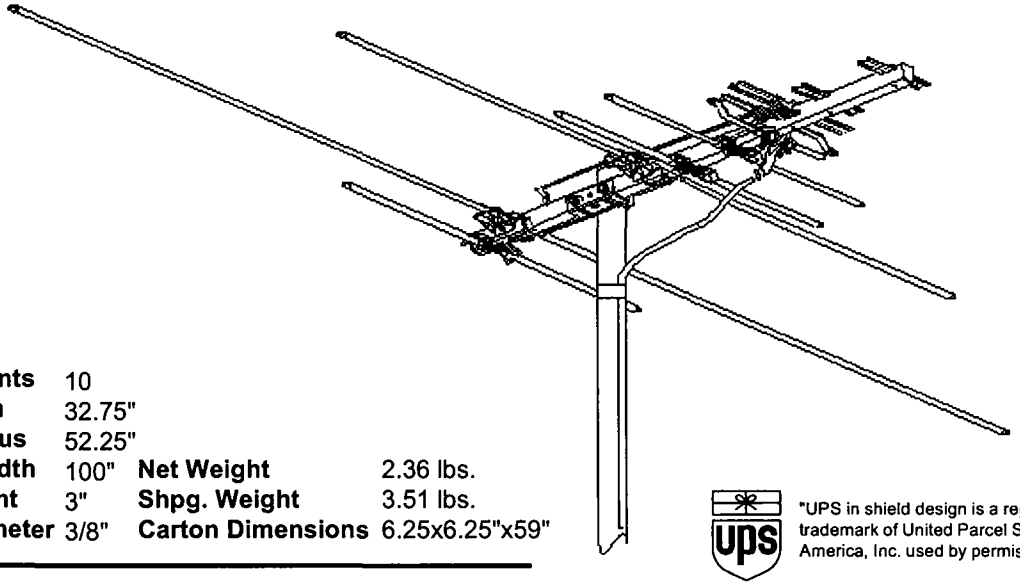

Active Elements	10		
Boom Length	32.75"		
Turning Radius	52.25"		
Maximum Width	100"	**Net Weight**	2.36 lbs.
Vertical Height	3"	**Shpg. Weight**	3.51 lbs.
Element Diameter	3/8"	**Carton Dimensions**	6.25x6.25"x59"

"UPS in shield design is a registered trademark of United Parcel Service of America, Inc. used by permission."

Output Impedance: 300 ohm / 75 ohm with included transformer
Recommended Preamp: AP Series

Made in U.S.A.

CHANNEL	CH.2	CH.4	CH.6	CH.7	CH.9	CH.11	CH.13	CH.14	CH.32	CH.50	CH.69
dB gain over reference dipole	.2	1.8	.5	5	5	5.3	4.1	3.6	5.1	6	6
beamwidth at half power points	83°	82°	78°	51°	66°	48°	33°	75°	54°	40°	43°
front-to-back ratio	1dB	1.5dB	3dB	8.5dB	12dB	12.5dB	4.5dB	7dB	10.5dB	14dB	11dB

POLAR PATTERNS

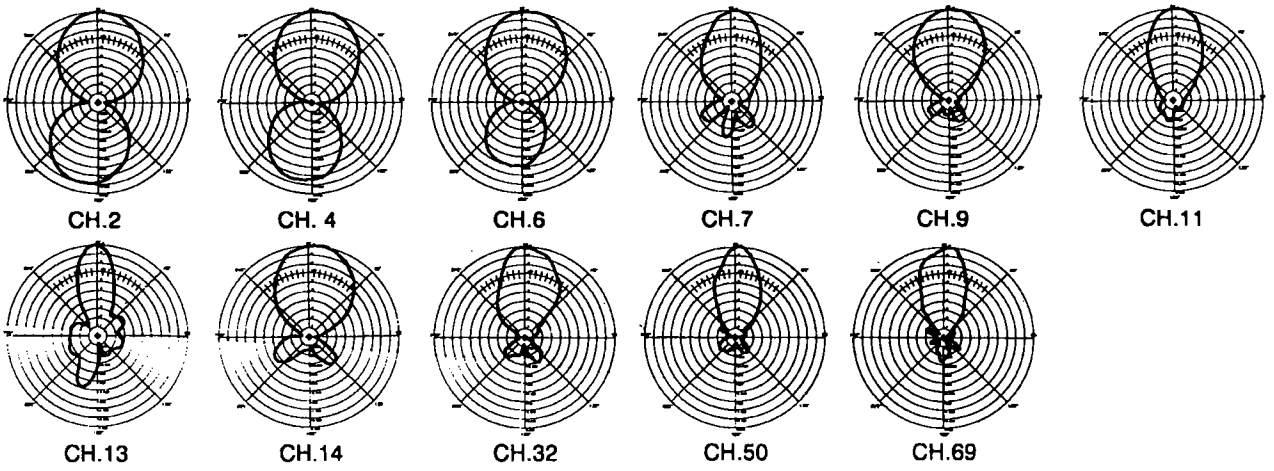

Printed in U.S.A. Winegard Company, 3000 Kirkwood St., Burlington, IA 52601-2000 Rev. 6/01

WINEGARD®
Clearly the World's Best®

PROSTAR® 1000 VHF/UHF/FM ANTENNA

engineering specifications

Model PR-7005

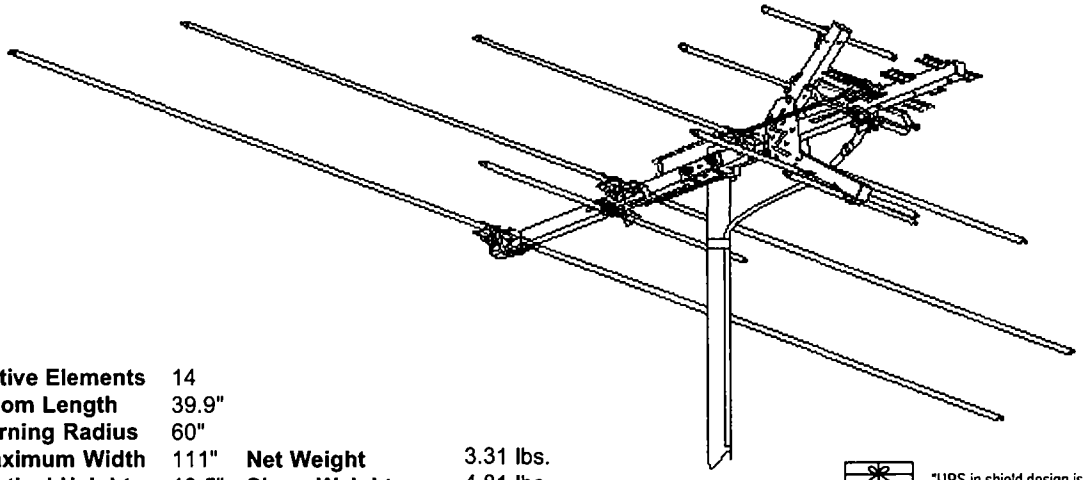

Active Elements	14		
Boom Length	39.9"		
Turning Radius	60"		
Maximum Width	111"	**Net Weight**	3.31 lbs.
Vertical Height	13.5"	**Shpg. Weight**	4.81 lbs.
Element Diameter	3/8"	**Carton Dimensions**	6.25x6.25"x68.25"

"UPS in shield design is a registered trademark of United Parcel Service of America, Inc. used by permission."

Output Impedance: 300 ohm / 75 ohm with included transformer
Recommended Preamp: AP Series

Made in U.S.A.

CHANNEL	CH.2	CH.4	CH.6	CH.7	CH.9	CH.11	CH.13	CH.14	CH.32	CH.50	CH.69
dB gain over reference dipole	.6	2.6	1.6	6.1	6.1	6.2	5.3	3.7	5.1	6	6
beamwidth at half power points	84°	75°	73°	38°	70°	48°	33°	85°	65°	32°	46°
front-to-back ratio	8dB	5dB	73dB	10.5dB	14dB	18dB	8dB	7dB	10.5dB	16dB	10.5dB

POLAR PATTERNS

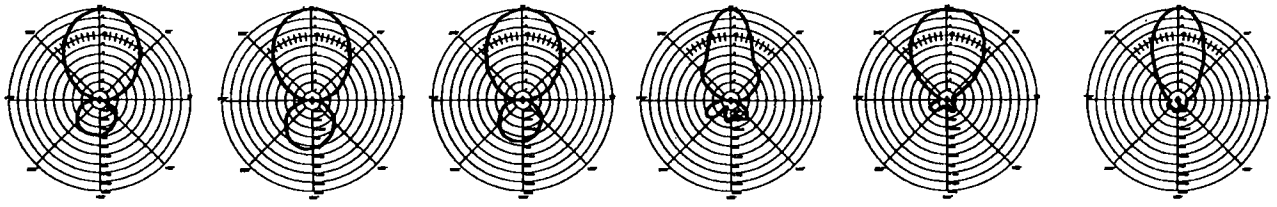

CH.2 CH. 4 CH.6 CH.7 CH.9 CH.11

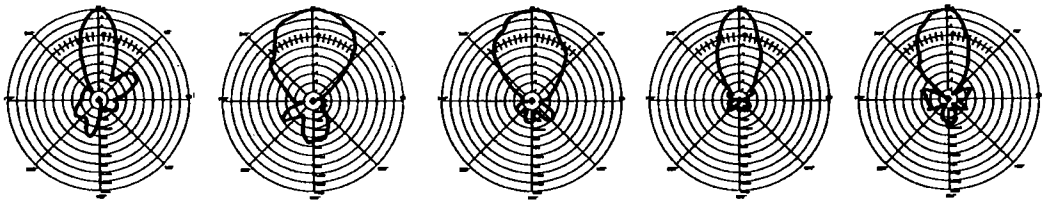

CH.13 CH.14 CH.32 CH.50 CH.69

Printed in U.S.A. Winegard Company, 3000 Kirkwood St., Burlington, IA 52601-2000 Rev. 6/01

WINEGARD®
Clearly the World's Best®

PROSTAR® 1000 VHF/UHF/FM ANTENNA

engineering specifications

Model PR-7010

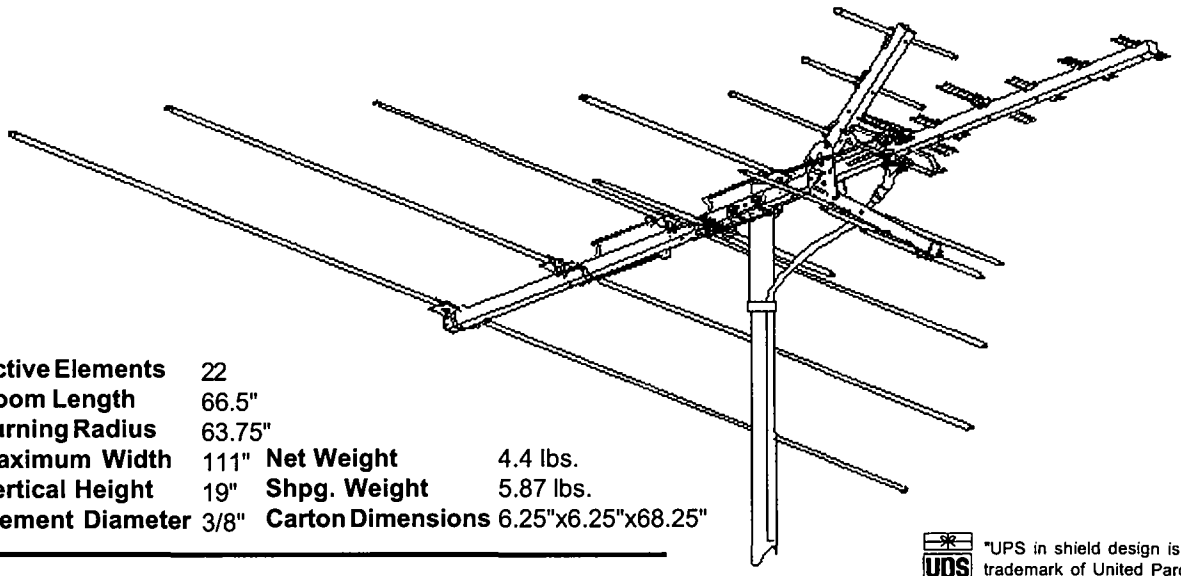

Active Elements	22		
Boom Length	66.5"		
Turning Radius	63.75"		
Maximum Width	111"	**Net Weight**	4.4 lbs.
Vertical Height	19"	**Shpg. Weight**	5.87 lbs.
Element Diameter	3/8"	**Carton Dimensions**	6.25"x6.25"x68.25"

Output Impedance: 300 ohm / 75 ohm with included matching transformer
Recommended Preamp: AP Series

"UPS in shield design is a registered trademark of United Parcel Service of America, Inc. used by permission."

Made in U.S.A.

CHANNEL	CH.2	CH.4	CH.6	CH.7	CH.9	CH.11	CH.13	CH.14	CH.32	CH.50	CH.69
dB gain over reference dipole	2.3	3.6	1.9	6.8	6.8	7.3	6.3	8.1	8	8.3	7
beamwidth at half power points	75°	77°	77°	36°	36°	43°	37°	73°	40°	37°	39°
front-to-back ratio	9dB	9dB	10.5dB	11.5dB	8dB	8dB	10dB	7dB	12.5dB	19dB	15dB

POLAR PATTERNS

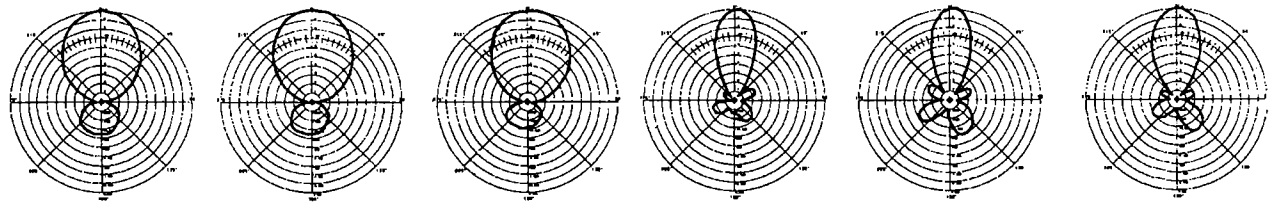

CH.2 CH. 4 CH.6 CH.7 CH.9 CH.11

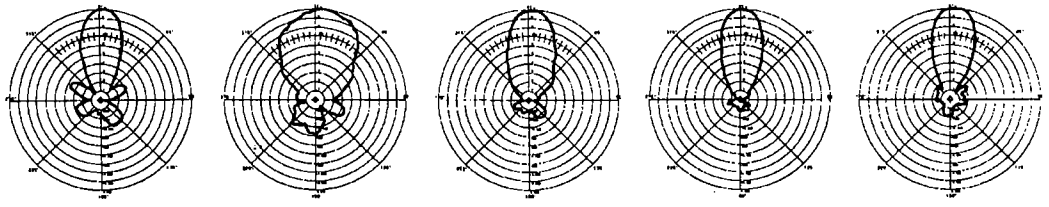

CH.13 CH.14 CH.32 CH.50 CH.69

Printed in U.S.A. Winegard Company, 3000 Kirkwood St., Burlington, IA 52601-2000 Rev. 6/01

WINEGARD®
Clearly the World's Best®

PROSTAR® 1000 VHF/UHF/FM ANTENNA

engineering specifications

Model PR-7015

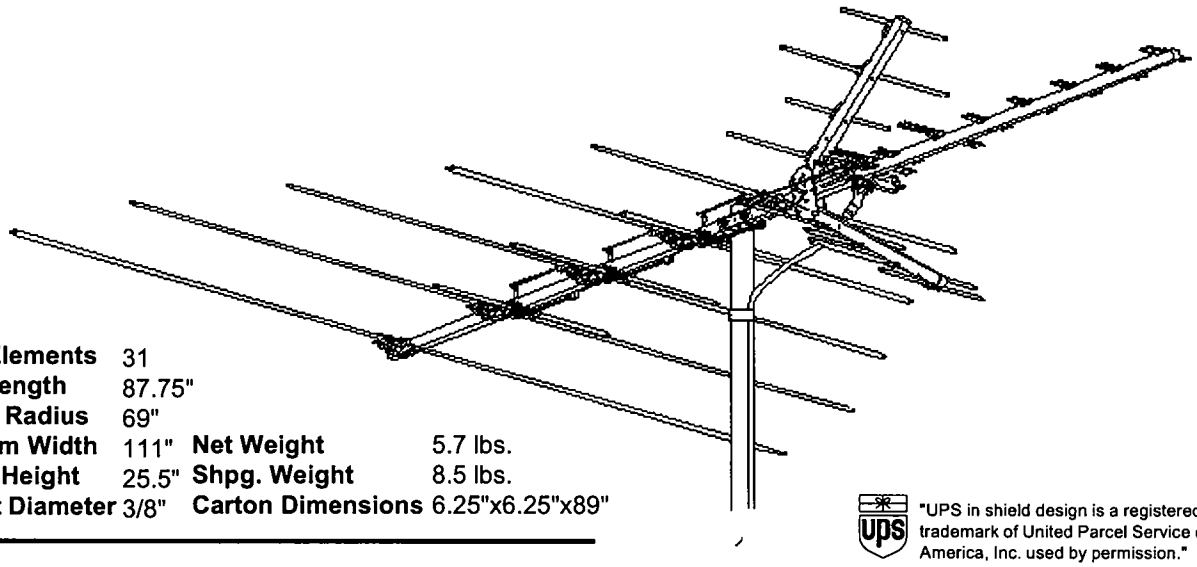

Active Elements	31		
Boom Length	87.75"		
Turning Radius	69"		
Maximum Width	111"	**Net Weight**	5.7 lbs.
Vertical Height	25.5"	**Shpg. Weight**	8.5 lbs.
Element Diameter	3/8"	**Carton Dimensions**	6.25"x6.25"x89"

"UPS in shield design is a registered trademark of United Parcel Service of America, Inc. used by permission."

Output Impedance: 300 ohm / 75 ohm with included matching transformer
Recommended Preamp: AP Series

Made in U.S.A.

CHANNEL	CH.2	CH.4	CH.6	CH.7	CH.9	CH.11	CH.13	CH.14	CH.32	CH.50	CH.69
dB gain over reference dipole	3.9	4.1	2.5	7.5	7.5	8	7	9.4	9.9	9.8	8.2
beamwidth at half power points	75°	74°	77°	32°	32°	47°	40°	57°	54°	38°	25°
front-to-back ratio	10.5dB	12dB	13dB	13dB	12.5dB	8dB	14.5dB	14dB	17dB	greater than 20dB	13dB

POLAR PATTERNS

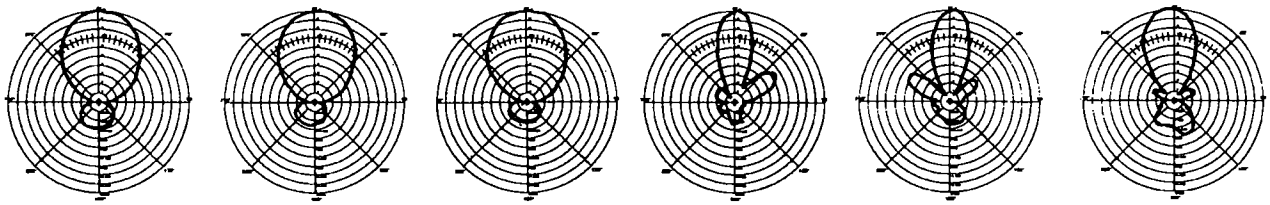

CH.2 CH. 4 CH.6 CH.7 CH.9 CH.11

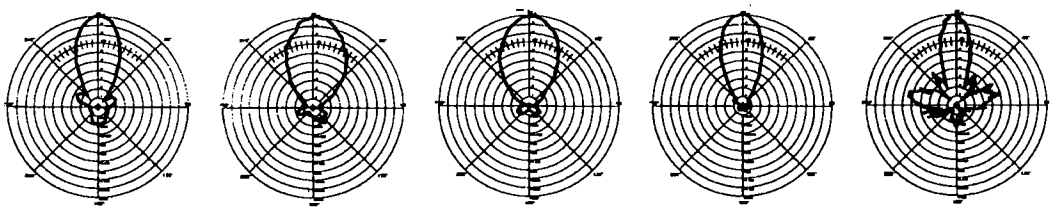

CH.13 CH.14 CH.32 CH.50 CH.69

Printed in U.S.A. Winegard Company, 3000 Kirkwood St., Burlington, IA 52601-2000 Rev. 6/01

WINEGARD®
Clearly the World's Best®

PROSTAR® 1000 VHF/UHF/FM ANTENNAS

engineering specifications

Model PR-7032

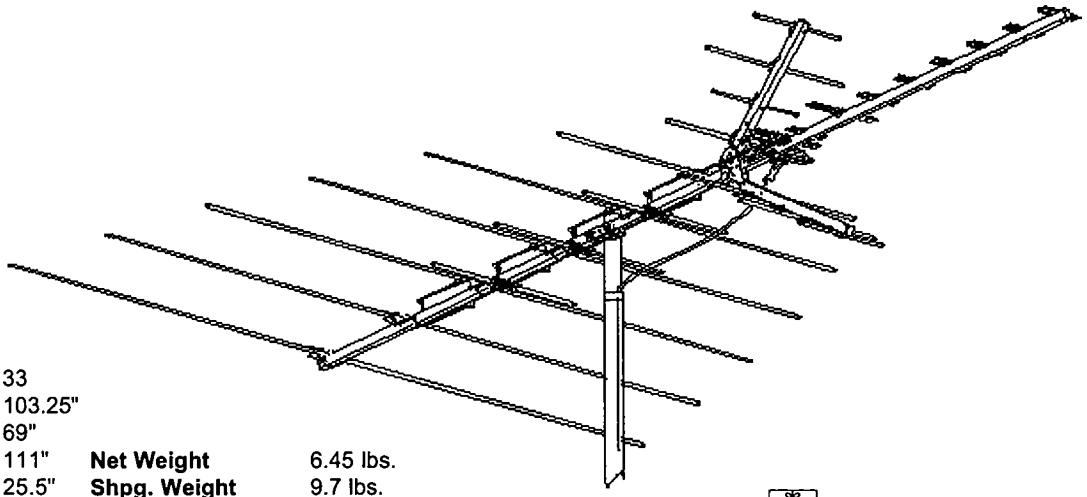

Active Elements	33		
Boom Length	103.25"		
Turning Radius	69"		
Maximum Width	111"	**Net Weight**	6.45 lbs.
Vertical Height	25.5"	**Shpg. Weight**	9.7 lbs.
Element Dia.	3/8"	**Carton Dimensions**	6.25"x6.25"x77"

"UPS in shield design is a registered trademark of United Parcel Service of America, Inc. used by permission."

Output Impedance: 300 ohm / 75 ohm with included matching transformer
Recommended Preamp: AP Series

Made in U.S.A.

CHANNEL	CH.2	CH.4	CH.6	CH.7	CH.9	CH.11	CH.13	CH.14	CH.32	CH.50	CH.69
dB gain over reference dipole	4.6	5	3	8	7.8	8.3	7.5	9.4	10	10	8.5
beamwidth at half power points	73°	75°	77°	32°	34°	33°	40°	56°	55°	37°	27°
front-to-back ratio	18dB	13dB	14dB	16dB	15dB	11dB	17dB	17dB	20dB	greater than 20dB	17dB

POLAR PATTERNS

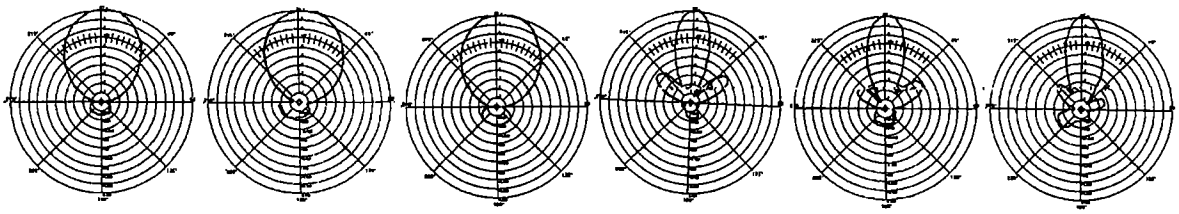

CH.2 CH.4 CH.6 CH.7 CH.9 CH.11

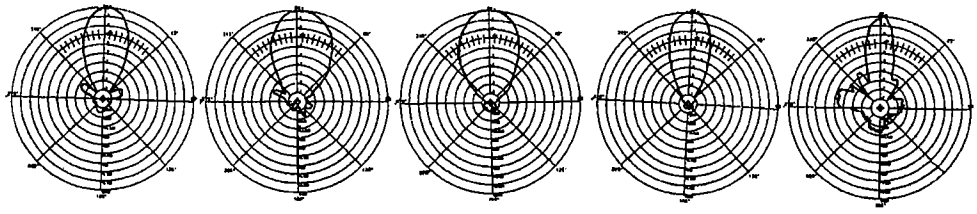

CH.13 CH.14 CH.32 CH.50 CH.69

Printed in U.S.A. Winegard Company, 3000 Kirkwood St., Burlington, IA 52601-2000 Rev. 6/01

WINEGARD®
Clearly the World's Best®

PROSTAR® 1000 VHF/UHF/FM ANTENNAS

engineering specifications

Model PR-7037

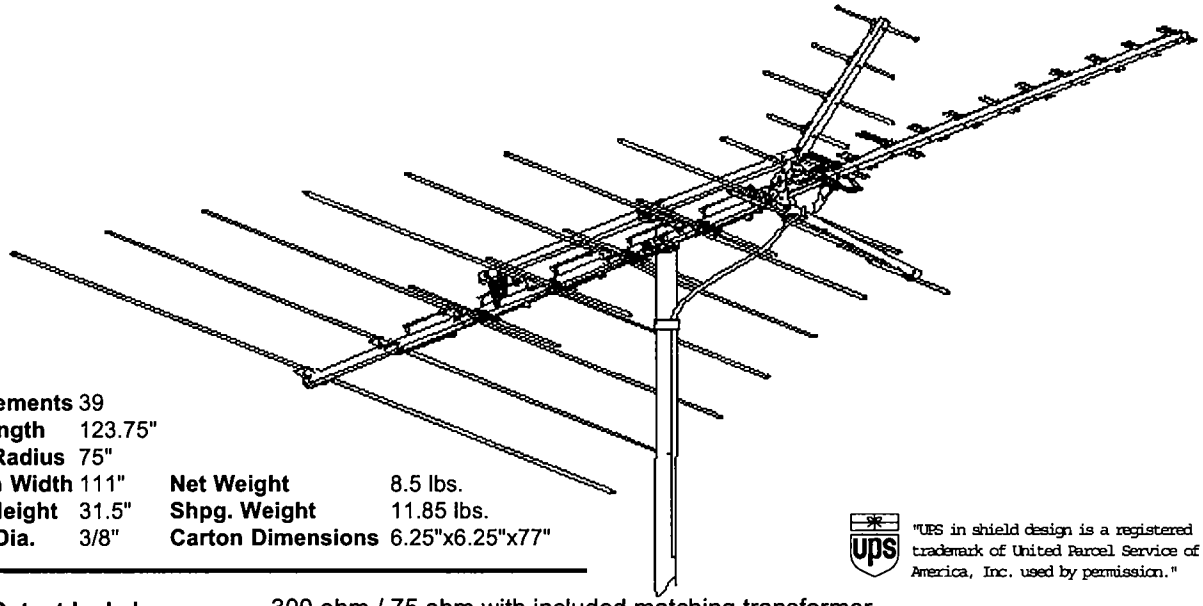

Active Elements 39
Boom Length 123.75"
Turning Radius 75"
Maximum Width 111"
Vertical Height 31.5"
Element Dia. 3/8"

Net Weight 8.5 lbs.
Shpg. Weight 11.85 lbs.
Carton Dimensions 6.25"x6.25"x77"

"UPS in shield design is a registered trademark of United Parcel Service of America, Inc. used by permission."

Output Imdedance: 300 ohm / 75 ohm with included matching transformer
Recommended Preamp: AP Series

Made in U.S.A.

CHANNEL	CH.2	CH.4	CH.6	CH.7	CH.9	CH.11	CH.13	CH.14	CH.32	CH.50	CH.69
dB gain over reference dipole	5.4	5.7	4.2	9.1	9.6	8.8	8.1	10.8	11.1	11.4	10.3
beamwidth at half power points	71°	72°	74°	27°	33°	39°	50°	57°	52°	34°	24°
front-to-back ratio	20dB	17dB	15dB	13dB	18dB	19dB	greater than 20dB	17dB	20dB	greater than 20dB	12dB

POLAR PATTERNS

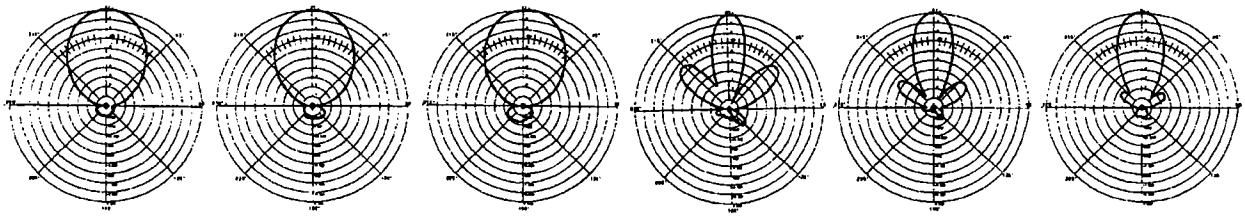

CH.2 CH.4 CH.6 CH.7 CH.9 CH.11

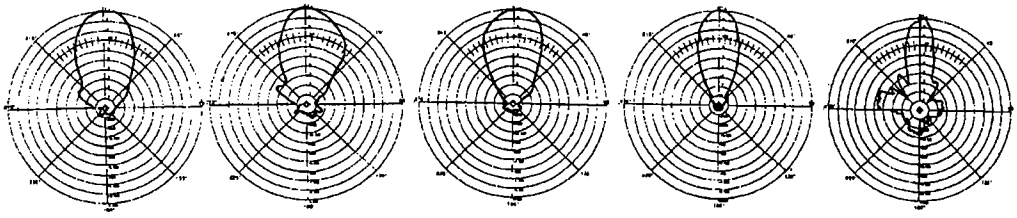

CH.13 CH.14 CH.32 CH.50 CH.69

Printed in U.S.A. Winegard Company, 3000 Kirkwood St., Burlington, IA 52601-2000 Rev. 6/01

WINEGARD®
Clearly the World's Best®

PROSTAR® 1000 VHF/UHF/FM ANTENNA

engineering specifications

Model PR-7042

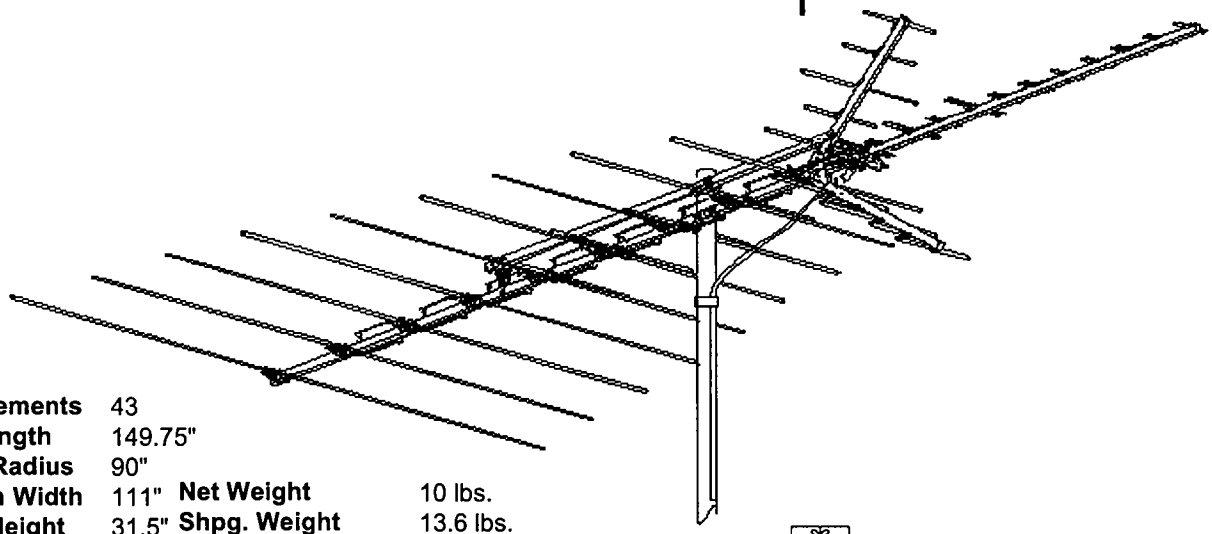

Active Elements	43		
Boom Length	149.75"		
Turning Radius	90"		
Maximum Width	111"	**Net Weight**	10 lbs.
Vertical Height	31.5"	**Shpg. Weight**	13.6 lbs.
Element Diameter	3/8"	**Carton Dimensions**	6.75"x6.25"x104.25"

"UPS in shield design is a registered trademark of United Parcel Service of America, Inc. used by permission."

Output Impedance: 300 ohm / 75 ohm with included matching transformer
Recommended Preamp: AP Series

Made in U.S.A.

CHANNEL	CH.2	CH.4	CH.6	CH.7	CH.9	CH.11	CH.13	CH.14	CH.32	CH.50	CH.69
dB gain over reference dipole	6	6.4	5	10.2	10	9.5	9.3	10.8	11.3	11.7	10.8
beamwidth at half power points	72°	70°	73°	31°	36°	39°	33°	55°	50°	34°	24°
front-to-back ratio	20dB	greater than 20dB	17dB	14dB	18dB	17dB	19.5dB	17dB	20dB	greater than 20dB	14dB

POLAR PATTERNS

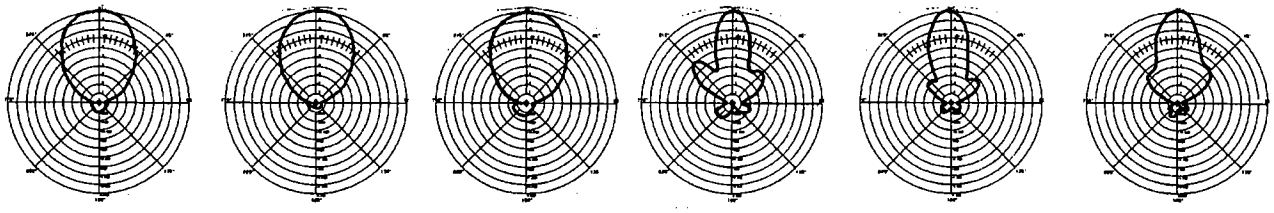

CH.2 CH. 4 CH.6 CH.7 CH.9 CH.11

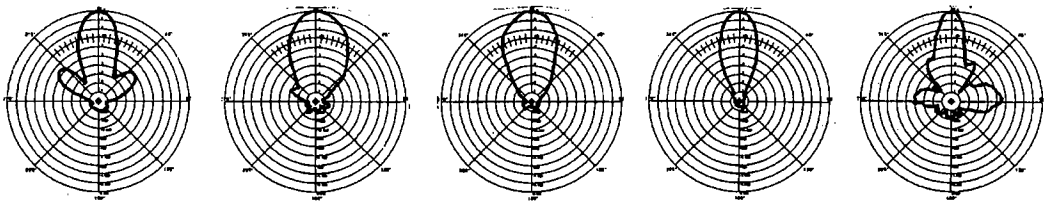

CH.13 CH.14 CH.32 CH.50 CH.69

Printed in U.S.A. Winegard Company, 3000 Kirkwood St., Burlington, IA 52601-2000 Rev. 6/01

WINEGARD®
Clearly the World's Best®

PROSTAR® 1000 VHF/UHF ANTENNA

engineering specifications

Model PR-7052

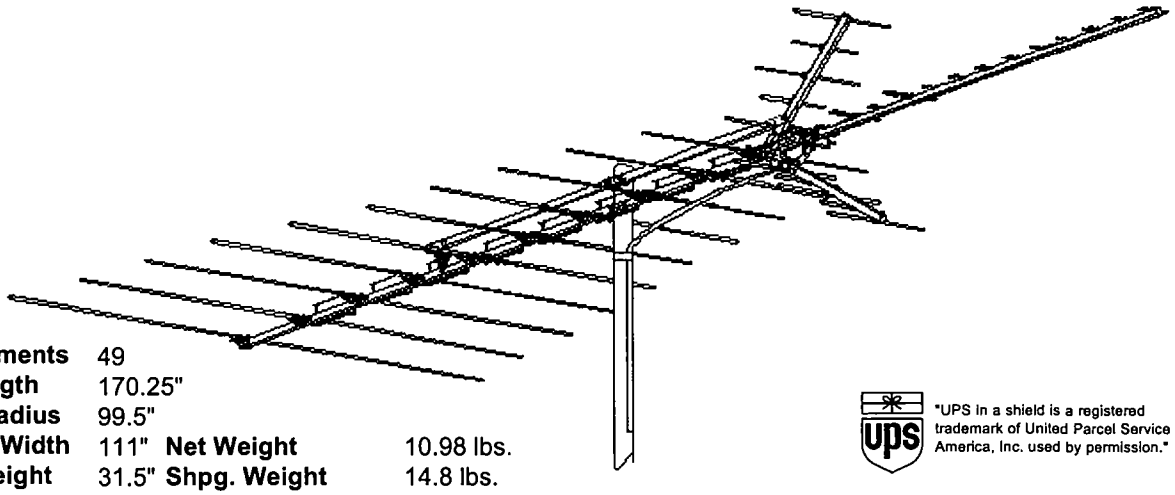

Active Elements	49		
Boom Length	170.25"		
Turning Radius	99.5"		
Maximum Width	111"	**Net Weight**	10.98 lbs.
Vertical Height	31.5"	**Shpg. Weight**	14.8 lbs.
Element Diameter	3/8"	**Carton Dimensions**	6.25"x6.25"x104.25"

"UPS in a shield is a registered trademark of United Parcel Service of America, Inc. used by permission."

Output Impedance: 300 ohm / 75 ohm with included transformer
Recommended Preamp: AP Series

Made in U.S.A.

CHANNEL	CH.2	CH.4	CH.6	CH.7	CH.9	CH.11	CH.13	CH.14	CH.32	CH.50	CH.69
dB gain over reference dipole	6.8	6.9	6	10.5	10.4	10	9.8	12.3	12.8	12.5	12.1
beamwidth at half power points	69°	69°	70°	35°	43°	38°	43°	51°	45°	31°	23°
front-to-back ratio	20dB	greater than 20dB	18dB	12dB	18.5dB	18dB	20dB	14dB	19dB	greater than 20dB	14dB

POLAR PATTERNS

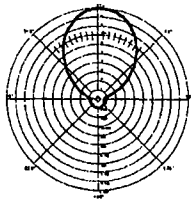
CH.2

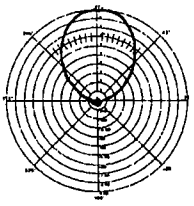
CH. 4

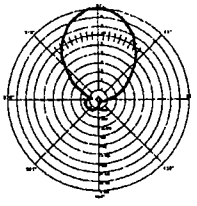
CH.6

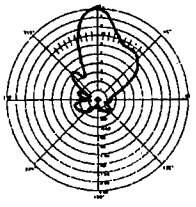
CH.7

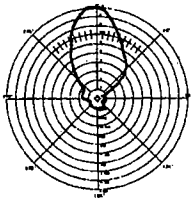
CH.9

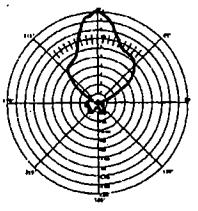
CH.11

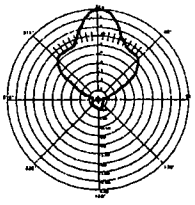
CH.13

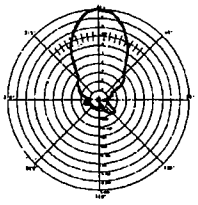
CH.14

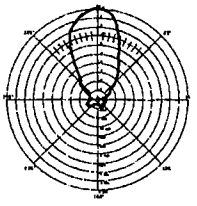
CH.32

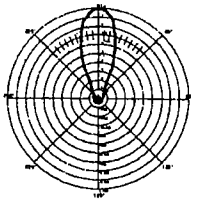
CH.50

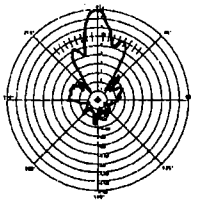
CH.69

Printed in U.S.A. Winegard Company, 3000 Kirkwood St., Burlington, IA 52601-2000 Rev. 6/01

WINEGARD®
Clearly the World's Best®

PROSTAR® 1000 VHF/FM ANTENNA

engineering specifications

Model PR-5030

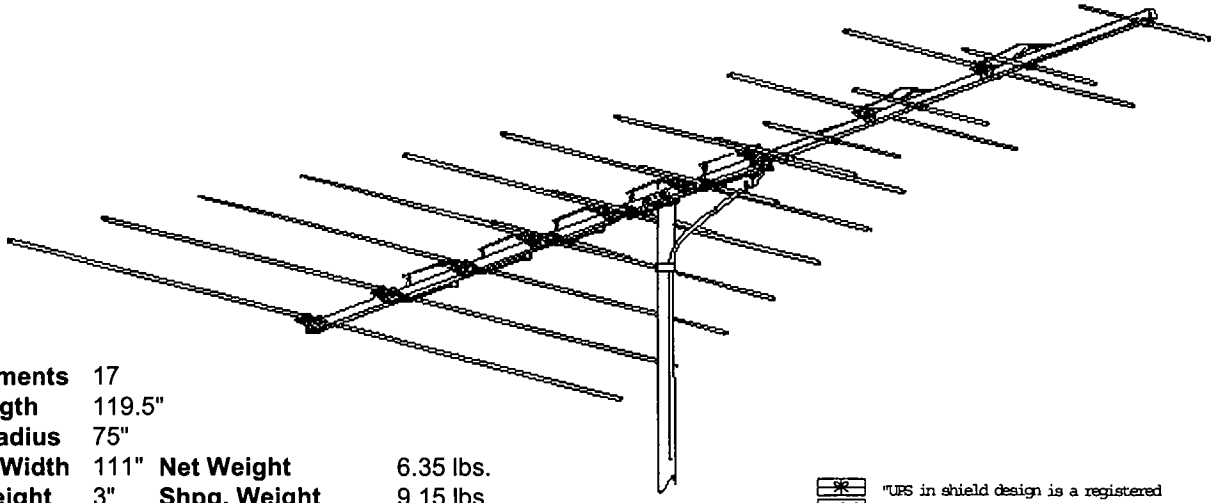

Active Elements	17		
Boom Length	119.5"		
Turning Radius	75"		
Maximum Width	111"	**Net Weight**	6.35 lbs.
Vertical Height	3"	**Shpg. Weight**	9.15 lbs.
Element Diameter	3/8"	**Carton Dimensions**	6.25"x6.25"x77"

"UPS in shield design is a registered trademark of United Parcel Service of America, Inc. used by permission."

Output Impedance: 300 ohm / 75 ohm with included transformer

Recommended Preamp: AP Series

Made in U.S.A.

CHANNEL	CH.2	CH.4	CH.6	CH.7	CH.9	CH.11	CH.13
dB gain over reference dipole	5.1	5.0	7.0	7.5	9.5	7.7	8.2
beamwidth at half power points	68°	70°	70°	41°	36°	36°	33°
front-to-back ratio	19dB	greater than 20dB	greater than 20dB	13dB	18dB	16dB	15dB

POLAR PATTERNS

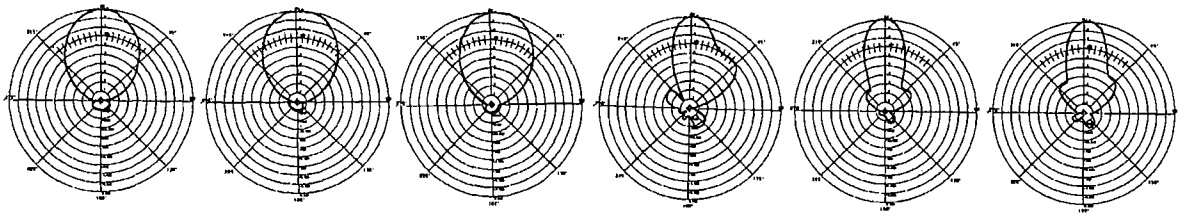

CH.2 CH. 4 CH.6 CH.7 CH.9 CH.11

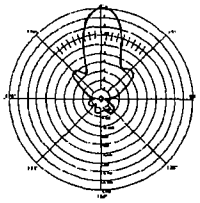

CH.13

Printed in U.S.A. Winegard Company, 3000 Kirkwood St., Burlington, IA 52601-2000 Rev. 6/01

WINEGARD®
Clearly the World's Best®

PROSTAR® 1000 FM ANTENNA

engineering specifications

Model PR-6000

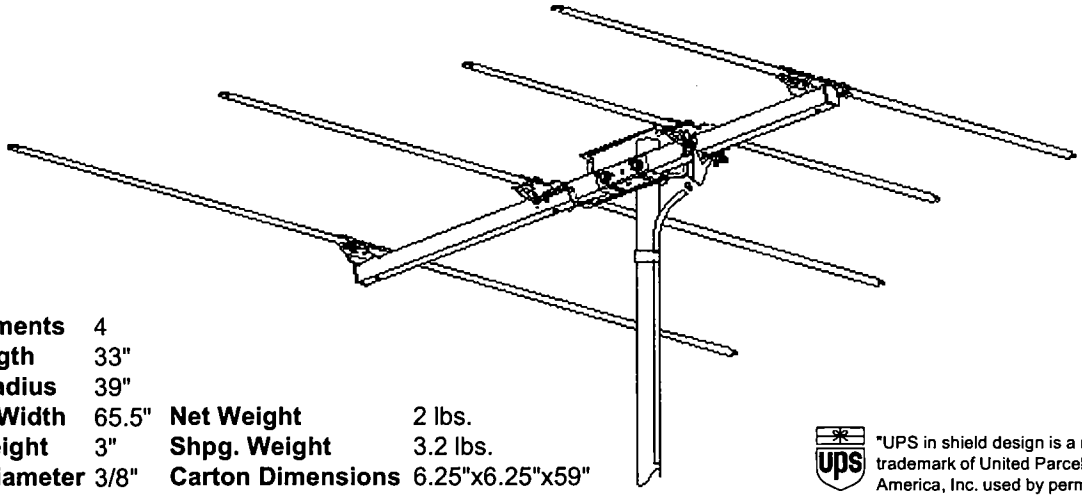

Active Elements	4		
Boom Length	33"		
Turning Radius	39"		
Maximum Width	65.5"	**Net Weight**	2 lbs.
Vertical Height	3"	**Shpg. Weight**	3.2 lbs.
Element Diameter	3/8"	**Carton Dimensions**	6.25"x6.25"x59"

"UPS in shield design is a registered trademark of United Parcel Service of America, Inc. used by permission."

Output Impedance: 300 ohm / 75 ohm with included transformer

Recommended Preamp: AP Series

Made in U.S.A.

CHANNEL	88MHz	98MHz	108MHz
dB gain over reference dipole	5	5	5.2
beamwidth at half power points	67°	72°	71°
front-to-back ratio	6dB	14dB	16dB

POLAR PATTERNS

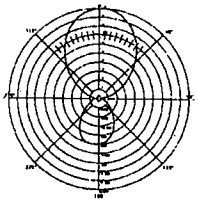

88MHz

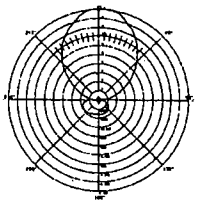

98MHz

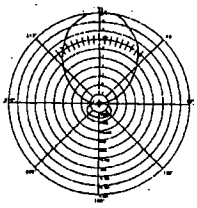

108MHz

Printed in U.S.A. Winegard Company, 3000 Kirkwood St., Burlington, IA 52601-2000 Rev. 6/01

WINEGARD®
Clearly the World's Best®

PROSTAR® 1000 FM ANTENNA

engineering specifications

Model PR-6010

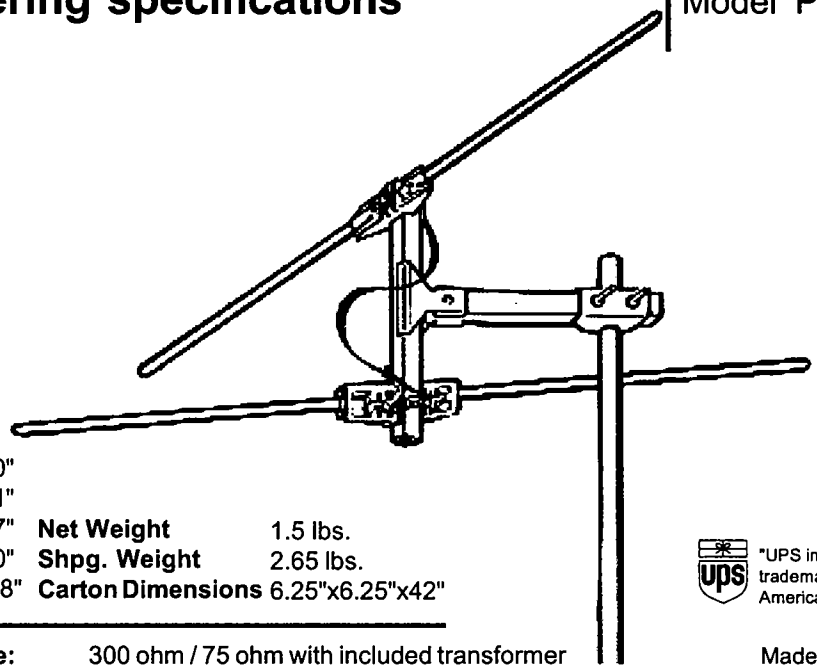

Active Elements	2		
Boom Length	10"		
Turning Radius	41"		
Maximum Width	67"	**Net Weight**	1.5 lbs.
Vertical Height	10"	**Shpg. Weight**	2.65 lbs.
Element Diameter	3/8"	**Carton Dimensions**	6.25"x6.25"x42"

"UPS in shield design is a registered trademark of United Parcel Service of America, Inc. used by permission."

Output Impedance: 300 ohm / 75 ohm with included transformer
Recommended Preamp: AP Series

Made in U.S.A.

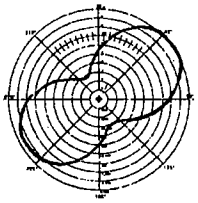

88MHz

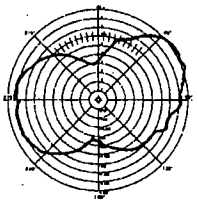

98MHz

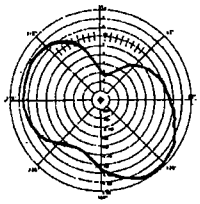

108MHz

Printed in U.S.A. Winegard Company, 3000 Kirkwood St., Burlington, IA 52601-2000

WINEGARD®
Clearly the World's Best®

BROADBAND YAGI ANTENNA

engineering specifications

Model YA-1026

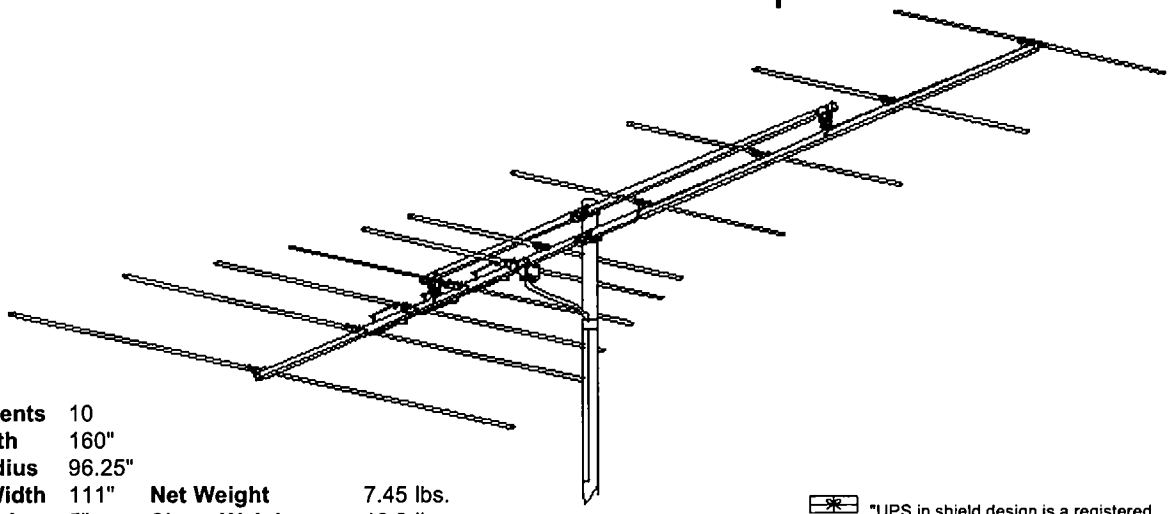

Active Elements	10		
Boom Length	160"		
Turning Radius	96.25"		
Maximum Width	111"	**Net Weight**	7.45 lbs.
Vertical Height	5"	**Shpg. Weight**	10.8 lbs.
Element Diameter	3/8"	**Carton Dimensions**	6.25"x6.25"x89"

"UPS in shield design is a registered trademark of United Parcel Service of America, Inc. used by permission."

Made in U.S.A.

Output Impedance: 75 ohm
Recommended Preamp: AP Series

CHANNEL	CH.2	CH.4	CH.6
dB gain over reference dipole	4.6	5.7	6.0
beamwidth at half power points	70°	66°	58°
front-to-back ratio	16dB	20dB	greater than 20 dB

POLAR PATTERNS

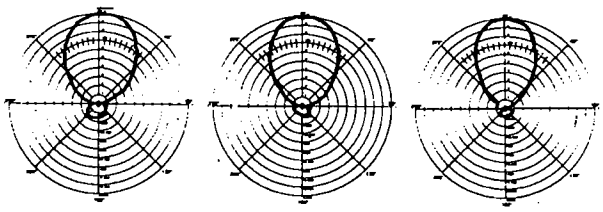

CH.2 CH.4 CH.6

Printed in U.S.A. Winegard Company, 3000 Kirkwood St., Burlington, IA 52601-2000 Rev. 6/01

WINEGARD®
Clearly the World's Best®

BROADBAND YAGI ANTENNA

engineering specifications

Model YA-1713

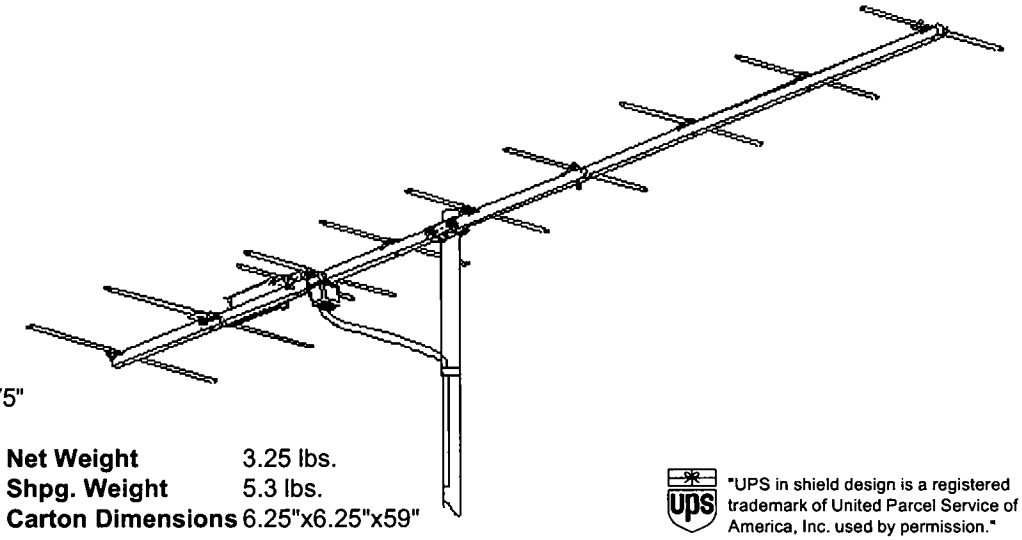

Active Elements	10		
Boom Length	99.875"		
Turning Radius	61"		
Maximum Width	35"	**Net Weight**	3.25 lbs.
Vertical Height	3"	**Shpg. Weight**	5.3 lbs.
Element Diameter	3/8"	**Carton Dimensions**	6.25"x6.25"x59"

"UPS in shield design is a registered trademark of United Parcel Service of America, Inc. used by permission."

Output Impedance: 75 ohm
Recommended Preamp: AP Series

Made in U.S.A.

CHANNEL	CH.7	CH.9	CH.11	CH.13
dB gain over reference dipole	9.1	10	10	10.3
beamwidth at half power points	56°	55°	47°	40°
front-to-back ratio	10.5dB	18dB	19dB	14dB

POLAR PATTERNS

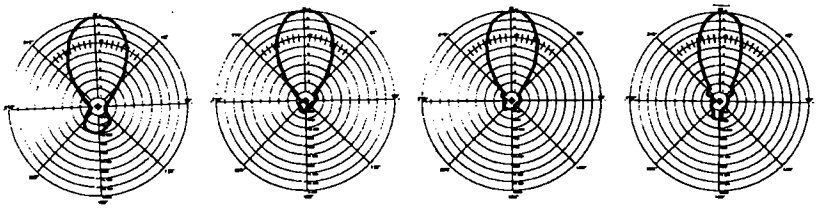

CH.7 CH.9 CH.11 CH.13

Printed in U.S.A. Winegard Company, 3000 Kirkwood St., Burlington, IA 52601-2000

WINEGARD®
Clearly the World's Best®

BROADBAND YAGI ANTENNA

engineering specifications

Model YA-6260

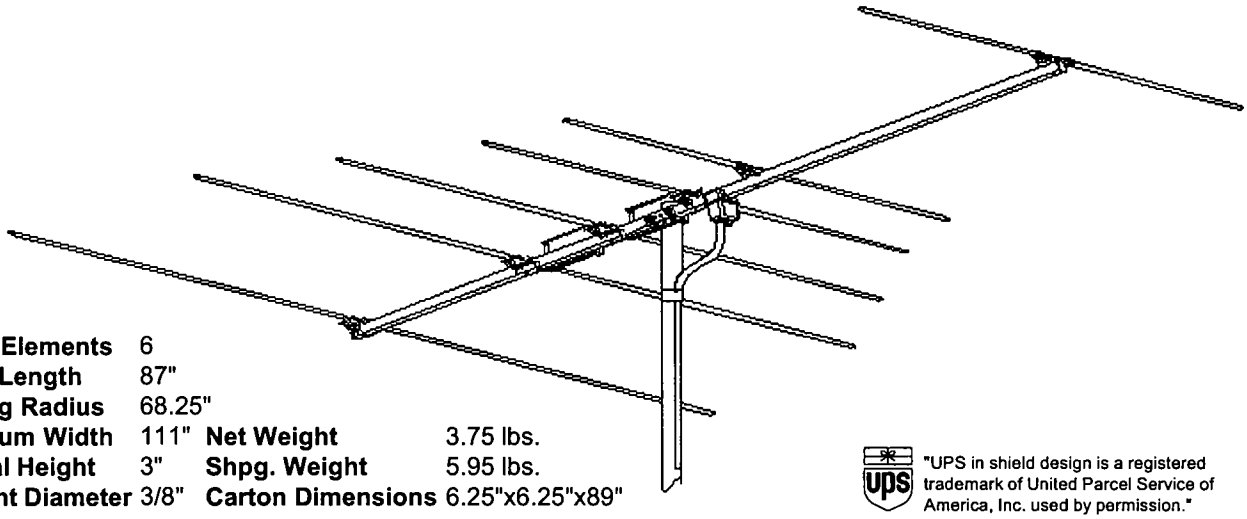

Active Elements	6		
Boom Length	87"		
Turning Radius	68.25"		
Maximum Width	111"	**Net Weight**	3.75 lbs.
Vertical Height	3"	**Shpg. Weight**	5.95 lbs.
Element Diameter	3/8"	**Carton Dimensions**	6.25"x6.25"x89"

"UPS in shield design is a registered trademark of United Parcel Service of America, Inc. used by permission."

Output Impedance: 75 ohm
Recommended Preamp: AP Series

Made in U.S.A.

CHANNEL	CH.2	CH.4	CH.6
dB gain over reference dipole	3.9	4	5
beamwidth at half power points	72°	74°	64°
front-to-back ratio	12dB	14dB	9.5dB

POLAR PATTERNS

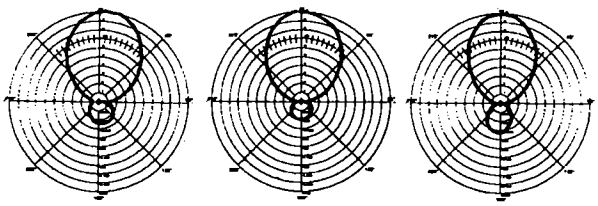

CH.2 CH.4 CH.6

Printed in U.S.A. Winegard Company, 3000 Kirkwood St., Burlington, IA 52601-2000 Rev. 6/01

WINEGARD®
Clearly the World's Best®

BROADBAND YAGI ANTENNA

engineering specifications

Model YA-6713

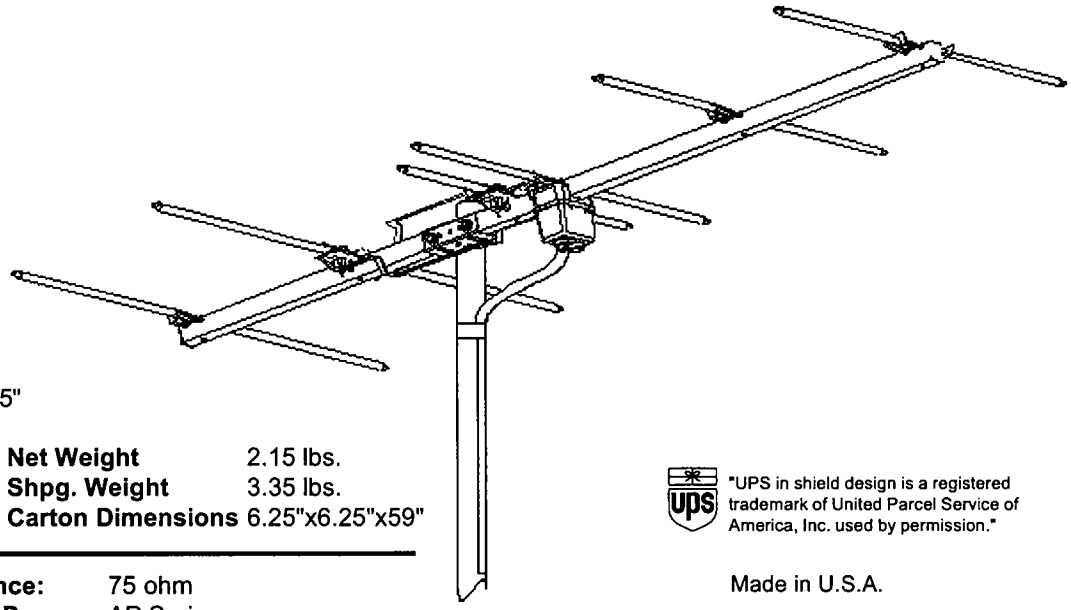

Active Elements	6		
Boom Length	49.875"		
Turning Radius	34"		
Maximum Width	35"	**Net Weight**	2.15 lbs.
Vertical Height	3"	**Shpg. Weight**	3.35 lbs.
Element Diameter	3/8"	**Carton Dimensions**	6.25"x6.25"x59"

Output Impedance: 75 ohm
Recommended Preamp: AP Series

"UPS in shield design is a registered trademark of United Parcel Service of America, Inc. used by permission."

Made in U.S.A.

CHANNEL	CH.7	CH.9	CH.11	CH.13
dB gain over reference dipole	6.8	7.3	7.2	6.8
beamwidth at half power points	64°	63°	60°	53°
front-to-back ratio	6dB	14dB	18dB	12.5dB

POLAR PATTERNS

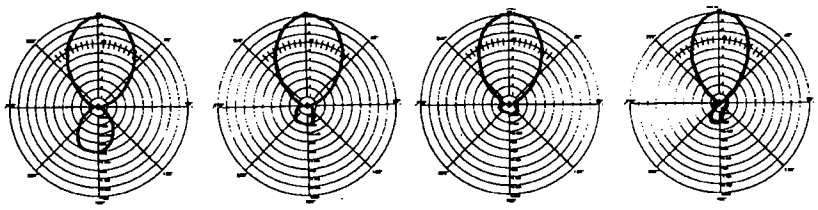

CH.7 CH.9 CH.11 CH.13

Printed in U.S.A. Winegard Company, 3000 Kirkwood St., Burlington, IA 52601-2000 Rev. 6/01

WINEGARD®
Clearly the World's Best®

HDTv²™ SquareShooter™ Antenna System

Get² ™

INNOVATIONS 2004 ®

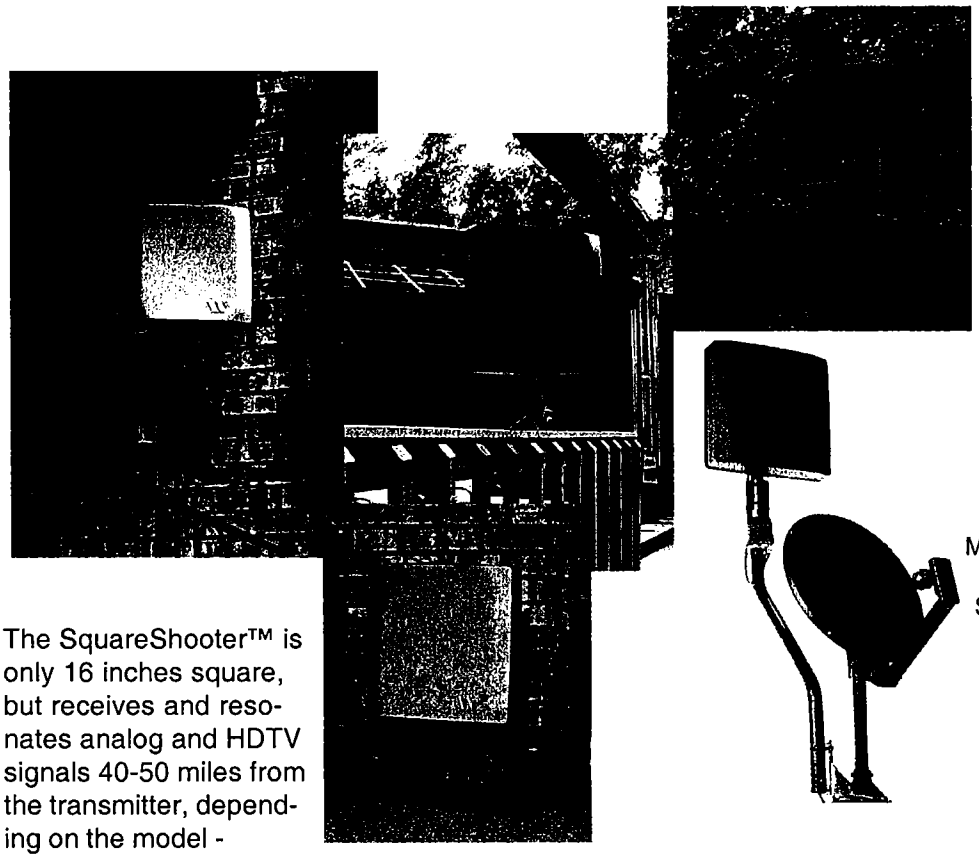

Mounting options for the Square Shooter:
- Wall mount
- Roof mount
- Rail mount
- Floor

The SquareShooter™ is only 16 inches square, but receives and resonates analog and HDTV signals 40-50 miles from the transmitter, depending on the model - SS-1000 or SS-2000 (amplified).

Its small size and design allows for versatile mounting locations such as walls, roofs, patios, attics and railings. Plus, the SquareShooter™ can be mounted above a satellite dish using Winegard's DS-1000 home satellite mounting kit and diplexed with the existing satellite coax cable, incorporating both the satellite and SquareShooter™ Off-Air signals on one cable.

Both models have a very high 20 to 1 front-to-back ratios and were specifically designed for urban/metropolitan locations where line-of-sight to the transmit source is blocked. Scatter-Plane technology neutralizes reflected, out-of-phase signals arriving at the back of the antenna element. This provides the SquareShooter™ its muscle to reject multi-path signal (ghosting) and the ability to tune into the desired reflected signal for the best reception characteristics so critical for downtown urban locations.

The SS-2000 is equipped with Winegard's new digital preamp specifically designed for digital reception with an input level of 300,000 mV and 12 dB flat gain across the entire bandpass. This design ensures proper digital demodulation for the Square Shooter™ antennas.

GET²™ GETHDTv2™ GETSquareShooter™

Printed in U.S.A. ©Winegard Company 2004 Winegard Company, 3000 Kirkwood St., Burlington, IA 52601-2000 WC-811 Rev. 12/16

Get 2 ™

HDTV.2™ SquareShooter™ Antenna System

Models SS-1000 & SS-2000

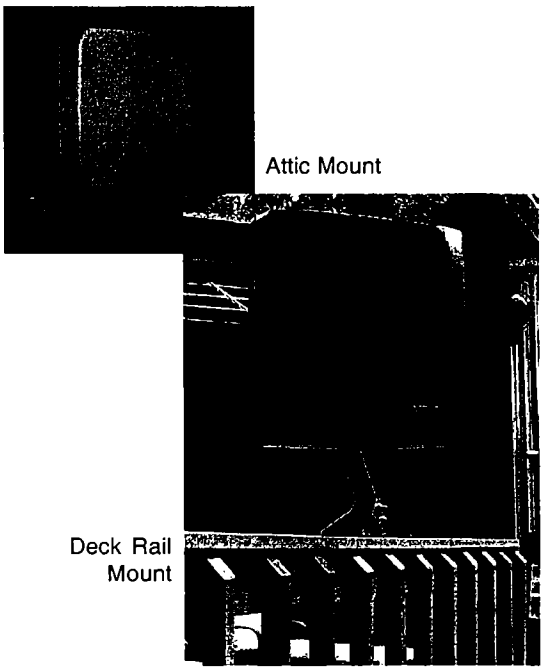

Attic Mount

Deck Rail Mount

Model SS-1000/SS-2000

Avg. beamwidth ..... 61°
Avg. VSWR across band 1.3:1
Avg. Front to back ..... 13 db
Avg. gain across band 470-806 ..... 4.5 db
Maximum Width Housing ..... 16" x 16" x 4"
Preamp gain (SS-2000)
300,000 µV Total Input
S/N ratio ..... 2.8 db
VHF ..... 12 dB avg.
UHF ..... 12 dB avg.

GENERAL RECEPTION GUIDELINES

	ANALOG	DIGITAL
VHF Ch. 2-6	0-10 miles	0-15 miles
VHF Ch. 7-13	0-35 miles	0-40 miles
UHF Ch. 14-69	0-45 miles	0-50 miles

Made in U.S.A. Patent Pending Ships UPS

Channel	CH. 7	CH. 10	CH. 14	CH. 32	CH. 56	CH. 69
Frequency	175.25 MHz	193.25 MHz	471.25 MHz	579.25 MHz	723.25 MHz	805.75 MHz
Beamwidth at half power points	95°	93°	68°	67°	58°	54°
Front-to-back ratio	6.0 db	2.6 db	20db	16 db	12.5 db	12 db

POLAR PATTERNS

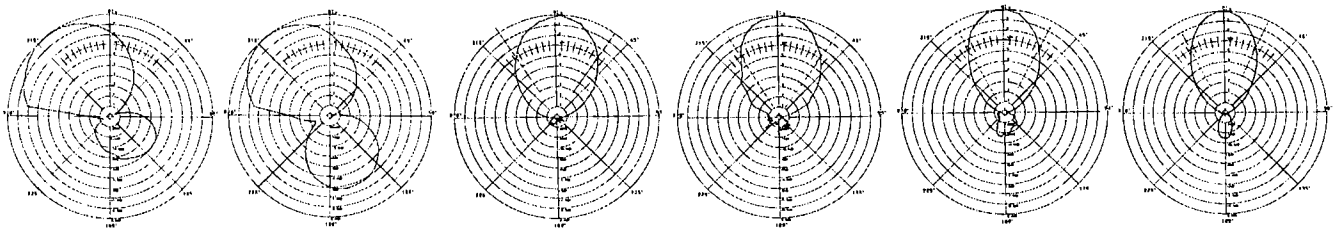

CH.7 CH.10 CH.14 CH.32 CH.56 CH.69

WINEGARD®
Clearly the World's Best®

Winegard Company • 3000 Kirkwood St. • Burlington, IA 52601 • 319/754-0600 • Fax 319/754-0787 • www.winegard.com Printed in U.S.A. © 2004 Winegard Company WC-811 Rev. 12/16

Exhibit 2

Low Noise Amplifiers

Advanced Receiver Research LNAs

Ar² Communications Products

Special Frequency GaAsFET Preamplifiers

For over fifteen years, Advanced Receiver Research has produced low noise figure Gallium Arsenide amplifiers for a wide variety of frequencies and applications. Over these years we have assembled quite a "cookbook" that allows us to handle orders for these "special" frequency ranges with the same quick delivery as standard off the shelf units. We do not charge a premium for this service - custom frequency preamplifiers cost no more than our standard units! Listed below are some of the more popular "special" frequency amplifiers that we have built. If you don't see exactly what you need please call as chances are good we can supply you with a custom preamplifier.

Frequency Range	N.F	Gain	Application
1.0 - 30	2.5	20	shortwave
1.8 -2.0	0.5	26	amateur
3.3	0.5	26	nmr/mri
3.5 - 4.0	0.5	26	amateur
7.0 - 7.4	0.5	26	amateur
15	0.5	26	nmr/mri
16	0.5	26	nmr/mri
21	0.5	26	nmr/mri
21 - 21.5	0.5	26	amateur
28 - 30	0.5	26	amateur
30 - 1000	3.5	11	broadband
30 - 50 (narrow tune)	0.5	26	commercial
34	0.5	26	nmr/mri
43	0.5	26	nmr/mri
49	0.5	26	cordless telephone
50 - 54	0.5	24	amateur
51	0.5	24	nmr/mri
54 - 60	0.5	24	television
60 - 66	0.5	24	television
66 - 72	0.5	24	television
70	0.5	24	nmr/mri
72	0.5	24	remote control
72 - 76	0.5	24	paging/linking
73 - 74	0.5	24	radio astronomy
76 - 82	0.5	24	television
82 - 88	0.5	24	television
85	0.5	24	nmr/mri
88 - 108 (broad tune)	1.0	20	fm broadcast
88 - 108 (narrow tune)	0.5	24	fm broadcast
97	0.5	24	nmr/mri
108 - 136 (broad tune)	1.0	20	aircraft
108 - 136 (narrow tune)	0.5	24	aircraft
120	0.5	24	nmr/mri
128	0.5	24	nmr/mri
136 - 138	0.5	24	weather satellite
140 - 144	0.5	24	commercial
144 - 148	0.5	24	amateur
150 - 170 (broad tune)	1.0	20	commercial
150 - 170 (narrow tune)	0.5	24	commercial
170	0.5	24	nmr/mri
174 - 180	0.5	22	television
180 - 186	0.5	22	television
186 - 192	0.5	22	television
192 - 198	0.5	22	television
200	0.5	22	nmr/mri

204 - 210	0.5	20	television
210 - 216	0.5	20	television
220 - 225	0.5	20	amateur
240 - 270 (broad tune)	1.0	15	military
240 - 270 (narrow tune)	0.5	20	military
300	0.5	18	remote control
340	0.5	18	nmr/mri
400	0.5	17	nmr/mri
400 - 420	0.5	17	commercial
420 - 450	0.5	17	amateur
440	0.5	17	military radar
450 - 470 (broad tune)	1.0	15	commercial
450 - 470 (narrow tune)	0.5	17	commercial
470 - 510 (broad tune)	1.0	15	commercial
470 - 510 (narrow tune)	0.5	17	commercial
470 - 722 (narrow tune)	0.6	15	television
800 - 890 (broad tune)	1.2	15	cellular/trunking
800 - 890 (narrow tune)	0.6	19	cellular/trunking
896 - 912	0.7	18	data transfer
900 - 950 (broad tune)	1.2	15	trunking/stl
900 - 960 (narrow tune)	0.7	18	trunking/stl

about us • index • commercial products • amateur products • gunnplexer® • nmr/mri • military • special frequency ranges • accessories • warranty • ordering information • contact us • home • top of page

High Performance
Receive Only
Broadband VHF/UHF Preamplifier

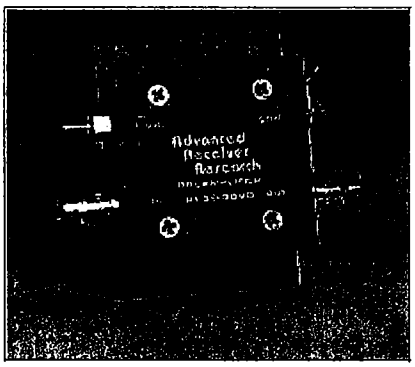

Features:

- Low noise figure
- High immunity to overload
- Completely shielded
- Suitable for mast/tower mounting
- Small size
- Rugged low profile custom enclosure

The P30-1000/11VD preamplifier has been designed for the most demanding amateur, commercial and military applications. Each model has been optimized for the lowest noise figure consistent with excellent strong signal handling capability. These preamplifiers are suitable for use in any receiver or converter/receiver system. Each preamplifier is housed in a rugged low profile custom aluminum enclosure finished with military grade black urethane enamel. Female BNC coaxial fittings are provided for the input and output connections. Other connectors or connector combinations are available. Complete rf shielding is maintained with a feedthrough capacitor for the dc power connection. Mounting holes, suitable for #4 hardware, are located at each corner of the bottom plate.

The P30-1000/11VD broadband preamplifier uses a low noise figure, high intercept point MMIC to obtain essentially flat performance characteristics across the frequency range. A +18 dBm (nearly 80 mW!), 1-dB compression specification means that overload should seldom be a problem even though the preamplifier does not employ a front-end filter. Use of a front-end filter would likely be required only in the most severe interference environments. These preamplifiers would be useful for improving receiver sensitivity throughout the vhf/uhf range. They would be particularly useful where broad vhf/uhf frequency ranges must amplified by a single preamplifier such as ahead of a broadband multicoupler, scanner receiver, spectrum analyzer, television receiver or a test receiver. In these applications single band GaAsFET preamplifiers, although lower in noise figure, may not be practical.

Extensive testing of this preamplifier on existing communications systems indicate that a signal-to-noise improvement of 6 - 14 dB can be expected. Each and every preamplifier is precision aligned on our noise figure measuring equipment and should provide long trouble free operation.

The P30-1000/11VD preamplifier is designed to be powered by a 11 - 16 volt dc source with a current consumption of 50 mA. Low power consumption along with the small size make these preamplifiers ideal for installation within existing equipment or systems, or for remote mounting at the antenna. Mounting the preamplifier at the antenna will provide the best system noise figure.

Specifications

Model	Freq. Range (MHz)	N.F. (dB)	Gain (dB)	1 dB Comp. (dBm)	1 dB Bandwidth (MHz)	Device Type	Price
P30-1000/11VD	30-1000	3.5	11	+18	900	MMIC	79.95

Supply voltage: 11 - 16 Vdc
Supply current: 50 mA
Weight: 2.0 oz.
Dimensions: outline drawing

Prices shown for standard BNC connectors
For custom frequency ranges see Special Frequency Ranges or contact factory

---

about us • index • commercial products • amateur products • gunnplexer® • nmr/mri • military • special frequency ranges • accessories • warranty • ordering information • contact us • home • top of page

Antennacraft LNAs

ANTENNACRAFT America's Top Producer of HDTV / VHF / UHF Antennas

ANTENNA PRODUCTS

Home Sales Support About

Antennacraft Pre-Amplifiers

Amplify digital and analog VHF/UHF signals!

Print friendly version of this page

New

10G201 & 10G202 Premium-Grade Pre-Amplifiers

Featuring:

Split-Band VHF-UHF design

Internal RF shielding

High-quality transistors

10G201
High-Input Amplifier

10G202
High-Gain Amplifier

10G212
Adjustable-Gain Amplifier

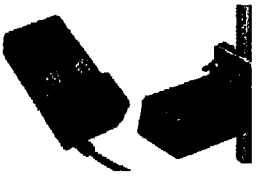

10G201 High Input Amplifier

Best in mixed signal areas where both strong and weak transmission signals are present!

Mast mounted with indoor power supply
Avg.Gain: 16dB VHF, 22dB UHF
Noise Figure: <3.0dB VHF,< 2.6dB UHF
High input level capacity
Surface-mount design
Switchable FM trap
One combined VHF/UHF 75 ohm input/output
UL listed, AC operation
Meets CEA specs for amplifiers
List Price $54.88

10G202 High Gain Amplifier

Best in deep fringe areas where all transmissions are weak!

Avg.Gain: 29 dB UHF/VHF
Mast mounted with indoor power supply
Noise Figure: <3.0dB VHF,< 2.6dB UHF
Surface-mount design
Switchable FM trap
Power LED on power supply
One combined VHF/UHF 75 ohm input/output
UL listed, AC operation
Meets CEA specs for amplifiers
List Price $62.38

10G212 Adjustable Gain Amplifier

Allows customer the ability to adjust gain based on intended application!

Avg.Gain: 30dB UHF/VHF
Adjustable Gain Control: up to 15dB
Mast mounted with indoor power supply
Noise Figure: <4.0dB VHF,<3.5dB UHF
Remote Switchable FM trap
Surface Mount design
One combined VHF/UHF 75 ohm input/output
UL listed, AC operation
List Price $33.63

Copyright (©) 2005 Antennacraft. All rights reserved.

Blonder Tongue LNAs

Reception Products

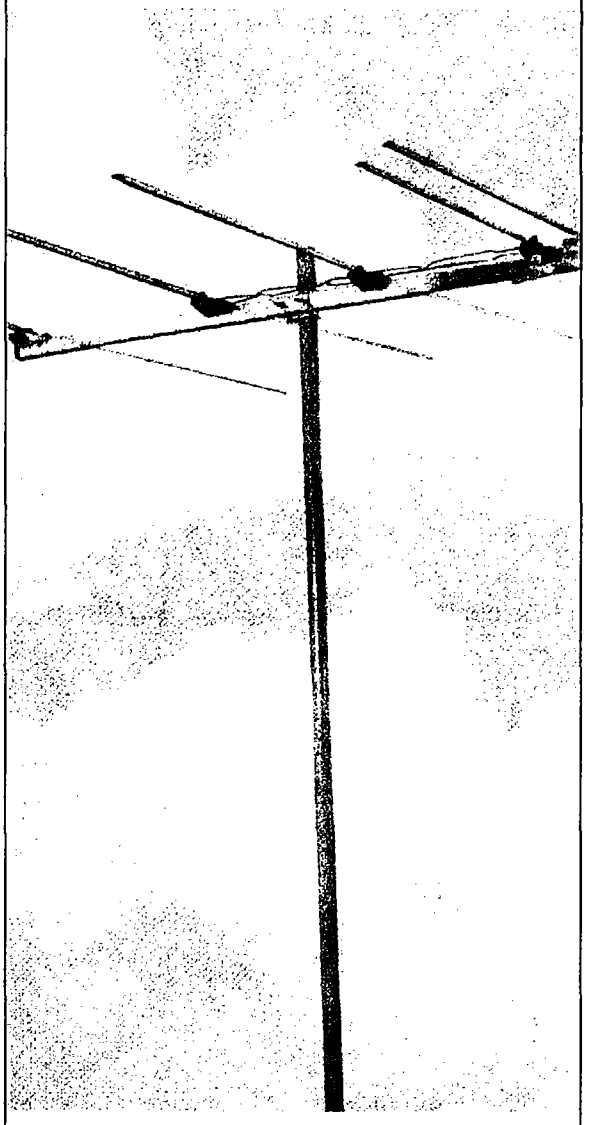

BLONDER TONGUE
LABORATORIES, INC.

One Jake Brown Road, Old Bridge, NJ 08857
800-523-6049 • Toll Free Ordering Fax: 800-336-6295
www.blondertongue.com

SCMA and CMA Series

Single Channel VHF and UHF Preamplifiers

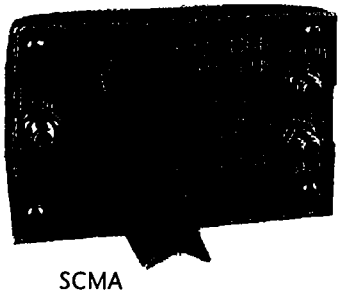

SCMA

The SCMA and CMA-b Single Channel Preamplifier Series are professional quality, very low noise, single channel VHF/FM and UHF preamplifiers. Both the SCMA and CMA-b are optimized for a single VHF channel or FM Band (88-108 MHz), while the SCMA-Ub is optimized for a single UHF channel. These preamplifiers can accept a wide range of input signal levels and offer excellent gain, making these units ideal for difficult signal areas. The SCMA-Ub has an internal trap that can be factory tuned to a customer specified UHF frequency to prevent overload or intermodulation interference from strong, local channels.

The SCMA/CMA-b Single Channel Preamplifier Series are housed in a die-cast case. Input, output, and test ports are 75 ohm, type "F" female connectors. A 5/8" entry adapter is supplied on the SCMA Series (only) to allow use of a 0.500 or 0.750 aluminum cable connector. The preamplifiers mount on a 1.5 inch O.D. (max) antenna mast with the supplied mounting hardware. Blonder Tongue PS Series -21 VDC power supplies (available separately) are used to power the preamplifiers through the downleads.

○ Features & Benefits

- Low Noise Figure
- Excellent Gain and Response Flatness
- Superior Adjacent Channel Overload Rejection
- Output Test Port for Uninterrupted Service Testing
- Ideal For All BTY Series Single Channel Antennas
- SCMA Series has its Guaranteed Noise Figure Stamped on the Case

○ Specifications

Electrical	**SCMA**	**SCMA-Ub**	**CMA-b**
Noise Figure (dB):	3.7, max (2-6) 3.0 max (FM) 2.5, max (7-13)	2.5 (14-69)	3.5 (2-6) 2.0 (FM) 2.5 max (7-13)
Trap Depth:	NA	10 dB	NA
Gain (dB):	27 (2-6), 24 (FM), 25 (7-13)	25 (14-34), 24 (35-69)	29 (2-6), 24 (FM), 26 (7-13)
Bandwidth:	6, 20 (FM)	6	6, 20 (FM)
Bandpass Flatness (dB): (FM)	±0.25 (2-13), 1.0 (FM)	±0.75	±0.25 (2-13), 1.0
Selectivity (dB):	12	12	12
Minimum Recommended Input Level (dBmV):	-10	-10.5	-10
Input Capability (dBmV):	+35	+35	+35
Impedance - All Ports) (Ohm):	75	75	75
General			
Power Requirements:	-21 VDC @ 65 mA	-21 VDC @ 29 mA	-21 VDC @ 40 mA
Recommended BT Power Supply:	PS-1536	PS-1526	PS-1526
Temperature Range (°C):	-40 to +60	-40 to +60	-40 to +60
Mechanical			
Max. Mast Diameter (O.D.) (in):	1.5	1.5	1.5
Dimensions (WxHxD in.): (WxHxD mm):	 5.13 x 5.25 x 3.50 130 x 133 x 89	 5.00 x 3.88 x 3.00 127 x 99 x 76	 5.00 x 3.88 x 2.31 127 x 99 x 59
Weight (lbs): (kg):	 1.31 0.60	 1.31 0.60	 1.31 0.60
Connectors (Common to All)			
Input:	"F" type, female		
Output:	"F" type, female		
Test:	"F" type, female		

○ Ordering Information

Model	**Stock No.**	**Description**
SCMA	4761	Preamplifier Single Channel VHF/FM, 54-216MHz [a]
SCMA-Ub	4426	Preamplifier Single Channel UHF, 470-806MHz [a]
CMA-B	4706	Preamplifier Single Channel VHF/FM, 54-216MHz [a]
PS-1526	1526	Power Supply Single Output, -21VDC @ 48mA
PS-1536	1536	Power Supply Dual Output, -21VDC @ 100mA

(a) Specify channel when ordering

CMA Series

Broadband VHF and UHF Preamplifiers

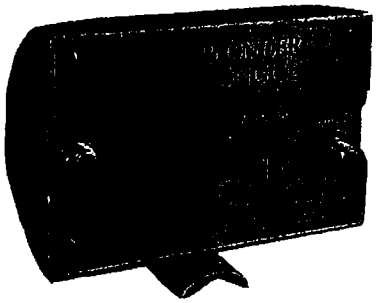

○ Features & Benefits

- Low Noise Figure
- Output Test Port for Uninterrupted Service Testing
- High Gain and Input Capability
- Ideal For All BTY Series Broadband Antennas

The CMA Broadband Preamplifier Series includes professional quality, low noise, broadband VHF & UHF preamplifiers. CMA's are available in four different models for amplification of low band VHF, high band VHF, broadband VHF, or broadband UHF. The CMA Series are housed in a die-cast case. Input, output, and test ports are 75 ohm, type "F" female connectors. The CMA's mount on a 1.5 inch O.D. (max) antenna mast with the supplied mounting hardware. Blonder Tongue PS Series -21 VDC power supplies(available separately) are used to power the preamplifiers through the downleads.

○ Specifications

Electrical	**CMA-LB**	**CMA-HB**	**CMA-BB**	**CMA-Uc**
Frequency Range (MHz):	54-88 (2-6)	174-216 (7-13)	54-216 (2-13)	470-806 (14-69)
Noise Figure (dB):	5.0	5.0	5.0	3.0
Gain (dB):	26	26	26	20
Bandpass Flatness (dB):	±0.5	±0.5	±0.7	±1.5
Min. Recommended Input Level (dBmV):	-7	-7	-7	-9
Input Capability (dBmV):	+28	+26	+25	+26
Impedance - All Ports (Ohm):	75	75	75	75
Input Return Loss (dB):	10	12	11	-
Output Return Loss (dB):	11	9	8	-
General				
Power Requirements:	-21 VDC @ 50 mA	-21 VDC @ 50 mA	-21 VDC @ 50 mA	-21 VDC @ 29 mA
Recommended BT Power Supply:	PS-1536	PS-1536	PS-1536	PS-1526
Temperature Range (°C):	-40 to +60	-40 to +60	-40 to +60	-40 to +60
Mechanical				
Maximum Mast Diameter (O.D.) in.:	1.5	1.5	1.5	1.5
Dimensions WxHxD in:	5.13 x 5.25 x 3.50	5.13 x 5.25 x 3.50	5.13 x 5.25 x 3.50	5.00 x 3.88 x 3.00
WxHxD mm:	130 x 133 x 89	130 x 133 x 89	130 x 133 x 89	127 x 99 x 76
Weight lbs.:	1.50	1.50	1.50	1.31
mm:	0.68	0.68	0.68	0.60

Connectors (Common to All)

Input:	"F" type, female
Output:	"F" type, female
Test:	"F" type, female

○ Ordering Information

Model	**Stock No.**	**Description**
CMA-BB	4448 BB	Preamplifier Broadband VHF, 54-216MHz
CMA-HB	4448 HB	Preamplifier Broadband High Band VHF, 174-216MHz
CMA-LB	4448 LB	Preamplifier Broadband Low Band VHF, 54-88MHz
CMA-UC	1264	Preamplifier Broadband UHF, 470-806MHz
PS-1526	1526	Power Supply Single Output, -21VDC @ 48mA
PS-1536	1536	Power Supply Dual Output, -21VDC @ 100mA

PS Series

Preamplifier Power Supplies

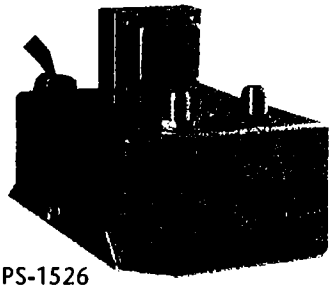

PS-1526

PS-1536

Features & Benefits

- Single Output, 40mA Capacity
- Regulated and Surge Protected
- Auxiliary AC Receptacle

The PS-1526 and PS-1536 are professional quality, DC power supplies designed to power SCMA and CMA Series antenna preamplifiers. Both units provide -21 VDC and allow for a combined VHF and UHF feed to be diplexed with the power feed. The PS-1536 has a dual output for powering two loads, with a maximum current rating of 100 mA. The PS-1526 has a single output for powering one load, with a maximum current rating of 40 mA.

The PS-1526 and PS-1536 are housed in an aluminum case with an auxiliary AC receptacle. Both units offer regulated and surge-protected power. The PS-1536 has a panel mounted fuse, provides an additional level of short circuit protection on the regulator and a clamped output voltage to protect connected loads.

Specifications

PS-1536

RF

Thru-Line Insertion Loss
VHF (10-300 MHz): 0.2 dB
UHF (470-806 MHz): 0.2 dB

Thru-Line Return Loss
VHF (10-300 MHz): 20 dB
UHF (470-890 MHz): 20 dB

Isolation Between Outputs:
10-700 MHz: 50 dB
700-806 MHz: 35 dB

Impedance: 75 Ω

Electrical

Output Voltage: -21 VDC

Current @ 105 VAC Input: 100 ma

General

Power Requirements:
117 VAC, ±10 %,
60 Hz, 0.11 A

Temperature Range: 0 to +50 °C

Mechanical

Dimensions (WxHxD):
8.25 x 3.50 x 2.25 in.
210 x 89 x 57 mm

Weight: 2.00 lbs, 0.91 kg

Connectors

Input: "F" type, female

Output + DC: "F" type, female

PS-1526

RF

Thru-Line Insertion Loss
VHF (10-300 MHz): 0.3 dB
UHF (470-806 MHz): 0.5 dB

Thru-Line Return Loss
VHF (10-300 MHz): 26 dB
UHF (470-890 MHz): 22 dB

Impedance: 75 Ω

Electrical

Output Voltage: -21 VDC

Current @ 105 VAC Input: 40 ma

General

Power Requirements:
117 VAC, ±10 %,
60 Hz, 0.07 A

Temperature Range: 0 to +50 °C

Mechanical

Dimensions (WxHxD):
4.75 x 3.25 x 2.75 in.
121 x 83 x 70 mm

Weight: 1.25 lbs, 0.57 kg

Connectors

Input: F" type, female

Output + DC: "F" type, female

Ordering Information

Model	Stock No.	Description
PS-1526	1526	Power Supply Single Output, -21VDC @ 40mA
PS-1536	1536	Power Supply Dual Output, -21VDC @ 100mA

Galaxy III and Galaxy III Plus

Consumer Broadband Preamplifiers

GALAXY III Series

○ Features & Benefits

- UHF/VHF and UHF Models
- Low Noise Figure
- Split Band Amplification for Maximum Dynamic Range and Overload Protection
- Dual Output Port Models with Built-in Splitter For Two Set Hookups
- Single or Dual Input Models for Combined or Separate UHF and VHF Antenna Installations
- Lightning and Surge Protected
- High Impact Plastic Enclosure

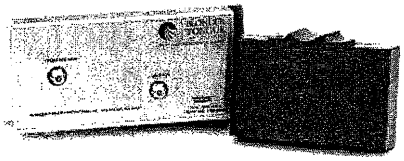

GALAXY III Plus Series

The GALAXY III Series are quality broadband antenna preamplifiers designed for residential consumer applications. The preamplifier's case is designed to mount on the antenna mast in close proximity to the receiving antenna for best performance. A compact indoor transformer and power adder are included with all models. The GALAXY III Series features lightning and surge protection and a high impact polypropylene case for long service life. Many UHF and UHF/VHF models are available, including units with 300 or 75 ohm, single or dual outputs. Each preamplifier is individually packaged in a display box and includes complete mast mounting hardware.

○ Specifications

	Input Impedance (ohm)	Output Impedance (ohm)	Frequency Band (dB)	Amplifier Gain (dB)	Noise Figure
VHF					
HORIZON III	1-300	1-300	LB (2-6)	14	5.0
			HB (7-13)	14	4.0
SKYLINER III PLUS	1-300	1-75	LB (2-6)	31	5.0
			HB (7-13)	31	4.0
UHF					
ABLE U2 III	1-300	1-300	UHF (14-69)	19	3.3
ABLE U2 III 75	1-300	1-75	UHF (14-69)	20	3.5
ABLE U2 III 75-75	1-75	1-75	UHF (14-69)	20	3.5
UHF/VHF					
CROSS COUNTRY III	1-300	1-300	LB (2-6)	14	5.0
			HB (7-13)	14	5.0
			UHF (14-69)	19	3.5
SUBURBAN III	1-300	1-75	LB (2-6)	15	5.0
			HB (7-13)	15	5.0
			UHF (14-69)	19	4.0
SUBURBAN III PLUS	1-300	1-75	LB (2-6)	31	5.0
			HB (7-13)	31	5.0
			UHF (14-69)	37	5.0
VOYAGER III	1-300	1-300	LB (2-6)	14	5.0
			HB (7-13)	16	5.0
			UHF (14-69)	18	3.3
VOYAGER III DUAL	1-300	2-300	LB (2-6)	14	5.0
			HB (7-13)	16	5.0
			UHF (14-69)	18	3.3
VAULTER III	1-300	1-75	LB (2-6)	15	5.0
			HB (7-13)	15	5.0
			UHF (14-69)	20	3.5
VAULTER III DUAL	1-300	2-75	LB (2-6)	14	5.0
			HB (7-13)	16	5.0
			UHF (14-69)	18	3.3
VAULTER III PLUS	1-300	1-75	LB (2-6)	31	4.5
			HB (7-13)	31	4.5
			UHF (14-69)	38	4.5

○ Ordering Information

Model	Stock No.	Description
ABLE U2 III	5118	Consumer Broadband UHF Preamplifier 1-300 Ohm Output
ABLE U2 III 75	5119	Consumer Broadband UHF Preamplifier 1-75 Ohm Output
ABLE U2 III 75-75	5219	Consumer Broadband UHF Preamplifier 1-75 Ohm Output
SUBURBAN III	5123	Consumer Broadband VHF/UHF Preamplifier 1-75 Ohm Output
VAULTER III	5124	Consumer Broadband VHF/UHF Preamplifier 1-75 Ohm Output
VAULTER III DUAL	5125	Consumer Broadband VHF/UHF Preamplifier 2-75 Ohm Outputs
VOYAGER III	5122	Consumer Broadband VHF/UHF Preamplifier 1-300 Ohm Output

Channel Master LNAs

Spartan 3™

Mast Mounted Preamplifiers

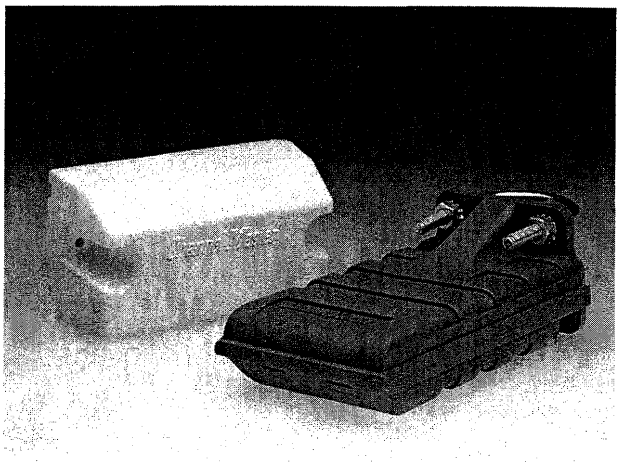

- Surface-mounted components for automated production and consistent high performance
- Attractive, modern design for both outdoor unit and power supply
- Easiest installation in the industry
- High gain and ultra low noise figure from the latest generation transistors gives optimum sensitivity
- Separate VHF and UHF amplification plus the use of ultra linear transistors improve output capability for optimum signal handling
- Switchable and tunable FM traps provide full FM control where needed
- Uninterrupted operation even under the harshest environmental conditions
- Full lightning and surge protection
- Cool running, redesigned 117 VAC power supply, Model 0747 is included with each model except Models 0065DSB and 0265DSB. Output voltage is +18 VDC. UL and cUL listed. (Power supply is also available as a separate model.)
- Models 0065 DSB and 0265 DSB are satellite receiver LNB voltage compatible. (+12 to +22 VDC)

SPECIFICATIONS

				VHF			UHF			FM Control		
Model	Inputs	Input Impedance Ohms	Output Impedance/ Downlead Ohms	Gain dB	Noise Figure dB	Output Capability dBmV*	Gain dB	Noise Figure dB	Output Capability dBmV*	Switchable Trap	Tunable Trap	Power Supply
0064 DSB	1 (VHF/UHF)	300	75	16	3.0	56	23	2.2	50	Yes	Yes	0747 Incl.
3041 DSB	1 (VHF/UHF)	300	75	16	3.0	56	23	2.2	50	Yes	No	0747 Incl.
0264 DSB	2 (VHF & UHF)	300	75	16	3.0	56	23	2.2	50	Yes	Yes	0747 Incl.
0068 DSB	1 (VHF/UHF)	75	75	16	3.0	56	23	2.2	50	Yes	Yes	0747 Incl.
0065 DSB	1 (VHF/UHF)	300	75	16	3.0	56	23	2.2	50	Yes	Yes	Not Incl.**
0265 DSB	2 (VHF & UHF)	300	75	16	3.0	56	23	2.2	50	Yes	Yes	Not Incl.**

**Output capability is quoted for 2 channels at –46 dB cross modulation. Derate by 5 or 9 dB for 4 or 8 channels per band. Maximum input is output capability minus gain.*
***Ensure the 100 mA current draw will not overload the satellite receiver. See Titan™ Model 7778 for Spartan 3™ features in the Titan™ die-cast housing.*

UHF Agile Modulator

MODEL 7644

- PLL frequency synthesized
- Set channel with DIP Switches
- Ideal for DBS satellite receivers, security cameras
- Output frequency may be set in 1 MHz increments, allowing CATV as well as off-air channel plans.

FCC Certified

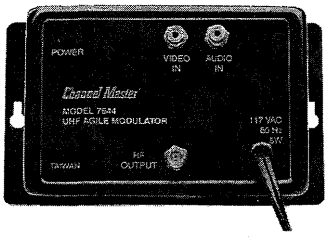

SPECIFICATIONS

RF:	
UHF Channel Range	14-50
Frequency Range	471.25 to 687.25 MHz
Output Level	+14 dBmV
Modulation Type	NTSC Double Sideband AM
Output Impedance/Connector	75 ohms, Type "F"
VIDEO:	
Input Level	1V± 3 dB
Input Impedance	75 ohms
Frequency Response	30 Hz - 4.2 MHz
Input Connector	RCA Phono
AUDIO:	
Input Level	200 mV rms
Input Impedance	10 k ohms
Frequency Response	50 Hz to 15 kHz
Subcarrier Frequency	4.5 MHz
Subcarrier Level	Video-15 dB
Input Connector	RCA Phono
POWER:	117 VAC, 60 Hz, 5W

TITAN 2™

MATV Mast Mounted Preamplifiers

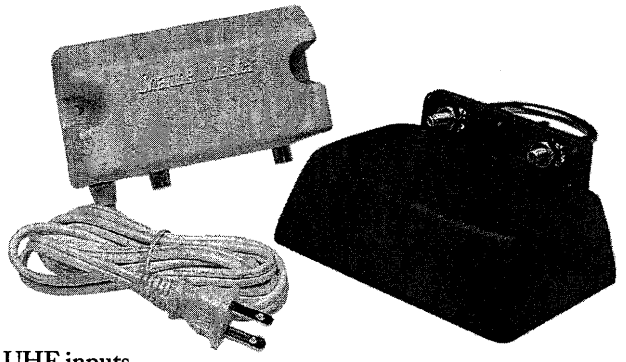

Three models available:

MODEL 7775
- UHF only

Models 7777 and 7778
- VHF and UHF bands with separate amplification in each band for maximum signal handling
- May be configured for either separate or combined VHF and UHF inputs
- Includes a switchable FM trap
- Model 7778 offers Spartan 3™ specifications in the die-cast Titan™ housing

SPECIFICATIONS

MODEL	7775	7777	7778
Number of Inputs*	1(UHF)	1/2(VHF & UHF)	1/2(VHF & UHF)
Input and Output Impedance	75	75	75ohms
Input and Output Connectors	Type F	Type F	Type F
VHF Gain	N/A	23	16dB
VHF Noise Figure	N/A	2.8	3.0dB
VHF Output Capability**	N/A	57	56dBmV
Switchable FM Trap	N/A	Yes	Yes
UHF Gain	26	26	23dB
UHF Noise Figure	2.0	2.0	2.2dB
UHF Output Capability**	51	51	50dBmV

** On Models 7777 and 7778, an internal switch selects either separate or combined VHF and UHF inputs.*
*** Output capability is quoted for 2 channels at -46 dB cross modulation.*
Derate by 5 or 9 dB for 4 or 8 channels per band. Maximum input is output capability minus gain.

ChannelMax®

UHF/VHF Outdoor Antenna Amplifier

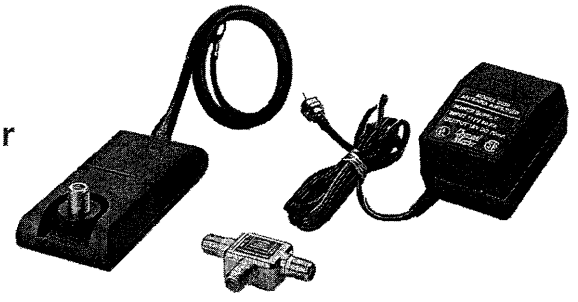

MODEL 3039
- Amplifies weak UHF/VHF television signals
- Increases incoming signal by 20 times
- Consists of antenna boom mounted amplifier, UL/cUL listed power supply, 6' RG59 coaxial cable, weather boot, and tie wrap
- Packaged in a clear, clam shell blister pack for optimum consumer appeal

SPECIFICATIONS

Frequency Range	54-88 MHz 174-806 MHz
Impedance	300 ohm (in), 75 ohm (out)
Gain	13 dB
Noise Figure	3.5 dB
Power Required	117VAC
Output Capability	45 dBmV per ch.(8 chs.)

Winegard LNAs

MODEL	INPUT			OUTPUT	AVERAGE GAIN		AVERAGE NOISE		MAXIMUM TOTAL INPUT# (MICROVOLTS)	
	VHF	UHF	82 CH.		VHF	UHF	VHF	UHF	VHF	UHF
AP-2870	75	75		75	17 dB	19 dB	2.9 dB	2.9 dB	10,000 µV	93,000 µV
AP-2880	75	75		75	29 dB	19 dB	2.9 dB	2.9 dB	29,000 µV	93,000 µV
AP-3700	75	or	75	75	17 dB	By-Passed	2.6 dB	N/A	110,000 µV	N/A
AP-3800	75	or	75	75	29 dB	By-Passed	2.9 dB	N/A	29,000 µV	N/A
AP-4700		75 or	75	75	By-Passed	19dB	NA	2.9dB	N/A	93,000 µV
AP-4800		75 or	75	75	By-Passed	28 dB	N/A	2.7 dB	N/A	30,000µV
AP-8275			75	75	29 dB	28 dB	2.9 dB	2.8 dB	29,000 µV	30,000 µVV
AP-8283			300	75	29 dB	28 dB	2.9 dB	2.8 dB	29,000 µV	30,000 µV
AP-8700			75	75	17 dB	19 dB	2.8 dB	2.8 dB	110,000 µV	93,000 µV
AP-8703			300	75	17 dB	19 dB	3.9 dB	3.9 dB	110,000 µV	93,000 µV
AP-8733	300	300		75	17 dB	19 dB	3.9 dB	3.9 dB	110,000 µV	93,000 µV
AP-8780			75	75	17 dB	28 dB	2.9 dB	2.7 dB	110,000 µV	30,000 µV
AP-8783			300	75	17 dB	28 dB	3.9 dB	3.9 dB	110,000 µV	30,000 µV
AP-8800			75	75	29 dB	19 dB	2.7 dB	2.8 dB	29,000 µV	93,000 µV
AP-8803			300	75	29 dB	19 dB	3.9 dB	3.9 dB	29,000 µV	93,000 µV
AP-8833	300	300		75	29 dB	19 dB	3.9 dB	3.9 dB	29,000 µV	93,000 µV

Exhibit 3

Rotors

ANTENNACRAFT America's Top Producer of HDTV / VHF / UHF Antennas

ANTENNA PRODUCTS

Home Sales Support About

TDP2 TV/FM Antenna Rotator

Dependable and reliable, this is the standard the TV industry goes by! For traditionalists everywhere, the TDP2 simplified multi-channel reception.

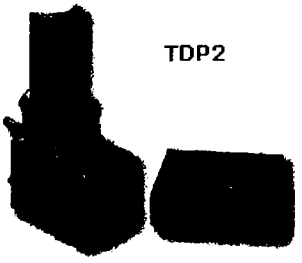

TDP2

Fully Automatic, heavy-duty motor handles large antenna with plenty of torque to break thru heavy ice loads

Strong, machine-cut gears that won't bind

Brake pads hold firm to prevent high wind damage (tested to 70 mph)

2 synchronized motors give exact degree of station location

One piece high alloy aluminum construction assures total weather protection

Gold, corrosion-resistant coated

Holds masts up to 2" diameter

Requires 3-wire rotator cable

UL listed, AC operation

List Price $94.88

Copyright (©) 2005 Antennacraft. All rights reserved.

Antenna Rotators

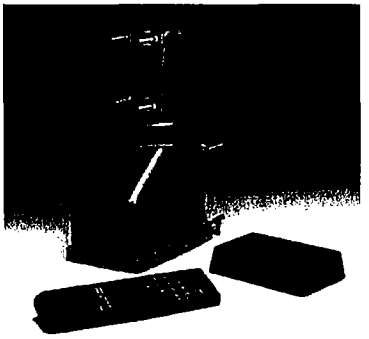

A Rotor or Rotator is a mast-mounted, motor-driven device that permits the TV viewer to conveniently rotate (orient) the outdoor antenna in any direction to optimize reception of a desired TV channel. A rotor should be considered when TV signals are being broadcast from towers in different directions and a single antenna can not accommodate all locations.

A rotator consists of two parts: 1) an indoor control unit, and 2) an outdoor drive unit. The two are connected via a 3-conductor wire that carries the voltage and control signals from the indoor unit to the outdoor drive unit.

Channel Master manufactures a remote control unit, model 9521A. A separate indoor controller, model 9537 is also available and is compatible with the following rotator systems: 9500, 9510, 9510A, 9512, 9513, 9515, 9515A, and Radio Shack 15-1225. Model 9537 is the indoor controller and handheld remote control. This model may be added to an existing manual rotator system and instantly upgrades the system to the remote control version.

Antenna Rotator Controller with Infra-Red Remote Control

The Complete System
Model 9521A —*Controller, Handheld, and Drive Unit*

Handheld Unit and Controller Only
Model 9537 —*Instantly upgrade a manual system to remote by simply replacing current manual controller with Model 9537. Model 9537 is a perfect upgrade for Models 9500, 9510(A), 9512, 9513, 0515(A), and Radio Shack 15-1225.*

Control Unit Features

- Compatible with Most Universal Remote Controls (Including Satellite)
- 69 Channel Programmable Memory
- Non-Volatile Memory — Holds Locations during Power Failures
- Automatic Synchronization Ensures Pinpoint Accuracy
- Direct Access via TV Channel Number or Digital Compass Location
- Unobtrusive Control Blends with any Décor

Drive Unit Features

- One-Piece Cast Aluminum Housing
- Heavy Duty Rotator Motor
- Wind-Tested Brake Pads
- Durable Powder-Coat Paint Finish
- Precision-Cut Gear System
- Built-In Steel Thrust Bearings

SPECIFICATIONS
Rotation 1RPM
Gear Ratio 3200 to 1
Max. Masting 2"
Max. Vertical Load 250 lbs.
Max. Balanced Windload Area 3 sq. ft.

117V 60 Hz Rotator and Control Unit
(230V 50 Hz Units: 9521EU and 9537EU)

360° Outdoor Antenna Rotator

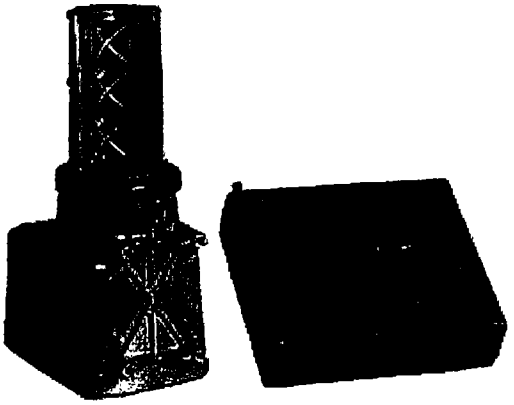

$74.99
Catalog #: **15-1245**

Brand: **RadioShack**
Model: **15-1245**

FREE SHIPPING

Protect Your Investment
Learn How

Availability	On-line: In-stock	In Store: Check availability
	Phone: In-stock 1-800-THE-SHACK (1-800-843-7422)	

(Pricing and availability may vary outside the contiguous 48 United States.)

With the Outdoor Antenna Rotator you can accurately position your antenna for the best possible TV and FM reception–perfect for suburban and rural areas. It automatically turns your antenna to the direction you dial in on the control panel, and then shuts off when it reaches the desired position.

PRODUCT FEATURES
• The heavy-duty construction handles large antennas and masts from 1-1/3 to 1-3/4 inches in diameter
• The Outdoor Antenna Rotator is also ideal for Ham and other amateur radio antennas
• For use with 3-wire rotator cable (#15-1150)
• Includes mounting hardware
• Includes channel labels for marking the best reception points for each channel
• Handles masts from 1-1/3 to 1-3/4 inches in diameter
• Rotation time 360°: 65 (± 5) seconds (at 60Hz)
• Rotation torque: 160 inch-pounds
• Vertical load: 99 pounds maximum
• Thrust bearing: Handles loads up to 250 pounds maximum
• Gear ratio: 3100 (± 100) to 1
• Wind load braking system: Up to 70mph
• Power source: 120VAC, 62W, 60Hz, 0.52A
• Motor: 18VAC (2.35A)
• UL Listed

Need Related Products?
Check the products that you would like added to the cart and then click the Add to Cart or Update Cart button.

100-Ft. Rotator Control Cable
15-1150
$14.99

Monday, June 13, 2005 5:45:40 PM

Remote Rotator Controller with Infrared Signal

$54.99
Catalog #: **15-1213**

FREE SHIPPING

Protect Your Investment
Learn How

Availability	On-line: Out of Stock	In Store: Check availability
	Phone: Out-of-stock 1-800-THE-SHACK (1-800-843-7422)	

(Pricing and availability may vary outside the contiguous 48 United States.)

PRODUCT FEATURES
• Indicator on the remote displays antenna direction
• Remote rotator controller with infrared signal
• Includes handheld unit and controller; rotator not included

Monday, June 13, 2005 5:48:18 PM