ATTACHMENT 1

Before the
Federal Communications Commission
Washington, D.C. 20554

In Re Technical Standards for Determining	)	
Eligibility for Satellite-Delivered Network	)	**ET Docket No. 05-182**
Signals Pursuant to the Satellite Home	)	
Viewer Extension and Reauthorization Act	)	

Engineering Statement of Meintel, Sgrignoli, & Wallace Concerning Measurement and Prediction of Digital Television Reception

1. At the request of the National Association of Broadcasters, the undersigned have prepared this engineering statement for consideration by the Commission in connection with its inquiry into available methods for measuring and predicting the ability of households to receive over-the-air digital television signals. The credentials and experience of the undersigned are set forth in the attached as **Exhibit A**. As detailed there, we have, among other things, conducted thousands of digital signal intensity tests in a variety of locations around the United States; helped to design and test state-of-the-art digital receivers; and developed industry-standard computer-based analysis applications and specialized software concerning RF propagation. We attempt in this Engineering Statement to provide the Commission with the benefit of this experience. We begin with a short discussion of pertinent background facts, before addressing the specific issues raised by the Commission.

INTRODUCTION AND BACKGROUND

Analog Television and the Beginnings of the Digital Era

2. Black and white analog television, commonly referred to by reference to its origins with the National Television Systems Committee (NTSC), was adopted as the standard in the United States in 1941. The analog color TV system was adopted in December 1953.

3. In 1987, 58 broadcast organizations petitioned the Commission to develop high definition television (HDTV) standards in the United States to remain competitive with new, emerging technologies. The FCC immediately created a multi-industry advisory committee to study this topic, calling the group the Advisory Committee on Advanced Television Services (ACATS).

4. After six years of competition and at the suggestion of the ACATS group, a consortium of companies banded together in May 1993, calling itself the Grand Alliance (GA). Over the subsequent two and one-half years, a digital television system was developed and thoroughly examined, with prototype hardware evaluated in both the laboratory and the field. In November 1995, the ACATS group recommended this system to the FCC as the next television system for the United States. From this work, the Advanced Television Systems Committee (ATSC) developed and documented a standard (**Ref 1**).

Commission Implementation of the Transition to Digital Television, Based on the Assumption of Properly-Oriented Rooftop Receive Antennas

5. In December 1996, the FCC adopted the ATSC system as the new digital television standard for the United States (**Ref 2**), thus officially beginning the transition from the old analog NTSC system to the new digital ATSC television system. In April 1997, the FCC issued its rules for digital operation (**Ref 3**). The Commission also made public its first set of channel allocations, lending each U.S. broadcaster a second 6 MHz channel for digital television transmission (**Ref 4**) for the purpose of replicating the station's analog NTSC service area. The next year, in February 1998, the Commission issued a revised set of allocations with additional and revised rules (**Ref 5**).

6. The Commission's procedures for allocating digital TV channels were based on a set of "planning factors" concerning DTV transmission and reception. (We discuss these

planning factors in greater detail below.) Of particular importance to the current inquiry, the FCC's planning factors assume a *typical* receive site with predetermined antenna gain and directivity, antenna height nine meters above ground level (AGL), antenna dipole factor, downlead loss, receiver noise figure, DTV signal-to-white noise (SNR) threshold of errors (≈ 15 dB), and desired-to-undesired (D/U) interference ratios (between DTV and NTSC signals as well as between DTV and other DTV signals).

7. As discussed in greater detail below, these planning factors for the DTV receive antenna setup are reasonable based on readily available, and moderately priced, equipment available to consumers in the marketplace. For around $40, for example, a household can purchase an excellent rooftop antenna (the Channel Master 4228) with gain figures for UHF and high-VHF channels (on which almost all network affiliates will operate) above those specified by the Commission in its DTV planning factors. And for a similarly modest expenditure, consumers can acquire a low-noise amplifier (LNA) or "preamplifier," which will enable consumers to *exceed* the DTV reception performance assumed in the digital planning factors.

8. The FCC's planning factors, first described in the April 1997 Sixth Report and Order (**Ref 4**), were further clarified in Bulletin 69 (**Ref 6**) from the Commission's Office of Engineering and Technology (OET). OET Bulletin 69 is a set of guidelines on "Longley-Rice Methodology for Evaluating TV Coverage and Interference" to aid broadcasters.

9. In determining the service area of *analog* TV channels, the Commission has always assumed use at the receive site of a properly-oriented *rooftop* antenna with significant gain. (We understand that the Satellite Home Viewer Act of 1988 and its successors have done so as well.) When the Commission sought to replicate stations' current analog service areas in its assignments of *digital* channels, it likewise assumed use of such a rooftop antenna. Had the

Commission instead assumed use of an indoor antenna (or of a low-quality or improperly-oriented rooftop antenna), the digital channel allocation process, and the Commission's determination of the amounts of power authorized to be used by stations, would have been entirely different. For a station to be expected to deliver a digital signal viewable via an *indoor* antenna at a distance of 50 miles from the tower, for example, it would need to transmit at an enormously higher power level than the Commission has authorized. In turn, the Commission's calculations concerning avoidance of interference would have been radically different if it had assumed that DTV stations would transmit at the extraordinary power levels needed to replicate analog coverage areas via use of an indoor (or poor-quality outdoor) antenna for digital reception.

10. The digital terrestrial standard is described in the FCC rules and regulations (**Ref 7**). Full service U.S. broadcasters, as part of the DTV build-out schedule, are now implementing terrestrial DTV, which consists of standard definition and high definition video signals, 5.1 channel (5 full bandwidth, 1 low bandwidth subwoofer) compact-disc quality audio, and the capability of a plethora of ancillary data services. Digital low-power TV (LPTV) and translators were first addressed in the Commission's rules as of September 2004. However, television translators and LPTV broadcasters have not yet received licenses for additional DTV channels. (Even after receiving channel assignments, translators and LPTV stations will need time to build out their digital facilities.) As discussed below, these and other timing issues create a serious challenge in implementing a digital predictive model for individual households in the near future.

The Repacking Process

11. During the transition from analog to digital television, broadcasters were given an extra 6 MHz channel for transmitting their digital ATSC DTV signal. However, it was always known that stations would be required to return one of their two channels in the future. As the transition enters its final phase, the broadcasters must not only give up the extra channel, but must also squeeze their digital channels into the range that the Commission has designated as the "core" spectrum, namely Channels 2-51.

12. Spectrum repacking is the process through which TV stations determine whether to keep their current DTV channel (if it resides in the core), move back to their original analog channel (if it resides in the core), or find a new channel in the core. Spectrum re-packing began in earnest in January 2005, and is currently moving forward as broadcasters are selecting their final DTV post-transition channels.

Very Few Network Affiliates Will Broadcast Digital Signals on Low-VHF Channels

13. As of today, there are roughly 43 broadcast stations with a low-VHF digital channel. It appears that very few broadcasters want to keep these low-VHF channels, and it is expected that fewer than 30 of the approximately 1,700 TV stations will broadcast in digital on low-VHF channels. For purposes of the present inquiry, of course, the stations of interest are Big-4 (ABC, CBS, Fox, NBC) network affiliates. Currently, only about 27 network affiliates have digital channels in the low-VHF range, and that figure may decrease, or at most increase slightly, as the repacking process proceeds.

The ATSC Transmission System

14. The ATSC data transmission system is digital Vestigial Side Band (VSB), and includes two modes: a trellis-coded 8-VSB mode for terrestrial use and a high data-rate 16-VSB mode for cable use. The ATSC system is described in **References 8, 9, and 10**.

15. The ATSC's 8-VSB system transmits 19.4 Mbps over a 6 MHz RF channel utilizing vestigial modulation (lower RF sideband is missing). All FCC-licensed power measurements use the *average* power of the VSB signal, and are made across the *entire* 6 MHz channel bandwidth. A small CW pilot is added to the randomized, noise-like signal that has very similar characteristics to white Gaussian noise.

16. An MPEG-transport stream of 188-byte data packets is inserted into the VSB exciter, with one MPEG packet placed within one VSB transmission data segment. Forward error correction is employed in the form of a cascaded trellis-coded modulation scheme (2/3-rate, 4-state, Ungerboeck code) with a Reed-Solomon coding scheme (187, 207, t=10) that can correct up to 10 byte errors per data segment (packet).

17-22. [Intentionally omitted.]

The FCC Planning Factors For Digital Service

23. The planning factors recommended by ACATS were first described in the FCC's Sixth Report and Order (**Ref 4 Appendix A**). These factors are for use with the Longley-Rice predictive software for determining NTSC and DTV *outdoor* field strengths regarding service coverage and interference evaluation. The Sixth Report and Order describes the methodology for predicting field strengths using terrain models. OET Bulletin No. 69 (**Ref 6**) further clarified the implementation and use of the Longley-Rice software methodology for evaluation of *outdoor* TV coverage and service.

24. As indicated above, the FCC's goals are to *replicate* the analog NTSC Grade B coverage area with the new digital ATSC system. The Grade B coverage area (Section 73.688 of the FCC rules) of a TV station is determined using the FCC(50, 50) statistical field strength curves (Section 73.699 of the FCC rules). The distance to the NTSC Grade B contour in a given direction from the transmitter is determined by the field strength value shown in **Table 1** for the geometric mean frequency within each of the three television bands. The DTV field strength values in **Table 1** are then used with the FCC(50, 90) curves to determine the maximum effective radiated power (ERP) in a given direction that matches the NTSC Grade B distance (but keeping the DTV ERP values between 50 kW and 1 MWatt for UHF, between 3.2 kW and 316 kW for high-VHF, and between 1.0 kW and 100 kW for low-VHF). This then defines the DTV area subject to calculation. The Longley-Rice radio propagation model is then used to make NTSC and DTV predictions of the RF field strength at specific geographic points based on the elevation profile of terrain between the transmitter and any reception point. The predicted field strength values for both NTSC and DTV within their respective contours determine whether each system is expected to deliver service at a particular receive site.

25. The Longley-Rice computer software that supplies these predictions is published in an appendix of an NTIA Report (**Ref 11**). Subsequently, G.A. Hufford described modifications to the software code in a memo dated January 30, 1985. This modified code is referred to as Version 1.2.2 of the Longley-Rice model, and it is the version used by the FCC for spectrum allocation evaluation.

26. OET Bulletin No. 69 was eventually updated with certain new parameters, and published in a revised version in February 2004 (**Ref 6**). Certain adjacent channel desired-to-

undesired (D/U) interference ratios were corrected. These new values were also reflected in the FCC rules, and are the ones that will be described in this report.

Receive Site Planning Factor Values

27. To evaluate TV service coverage, the Longley-Rice predictive software determines whether a particular location is expected to receive a signal of a certain specified minimum (or "threshold") field strength. The field strength minimums are, of course, different for analog and digital, and also depend on which channel band is being considered. As the Commission observes in the NOI, "[f]or DTV stations, the counterparts to the Grade B signal intensity standards for analog television stations are the values set forth in Section 73.622(e) of the Commission's rules describing the DTV noise-limited service contour." NOI, ¶ 2. (We understand that the Act incorporates by reference the specific dBu levels, by channel band, that are set forth in the Commission's rules.) The minimum values, as set forth in the rules, are as follows:

Channel Numbers	Channel Label	Defining NTSC Field Strength Using F(50, 50) Curves (dBμV/m)	Defining ATSC Field Strength Using F(50, 90) Curves (dBμV/m)
2-6	Low VHF	47	28
7-13	High VHF	56	36
14-69	UHF	64	41

Table 1 NTSC and DTV defining field strengths for use in FCC spectrum allocation planning

28. Note that the NTSC defining field strengths are determined using the traditional F(50, 50) statistical field strength prediction curves, while DTV defining field strengths are determined using F(50, 90) curves: that is, the curves predict a given field strength (or higher) for a given transmitter effective radiated power (ERP), and a given transmitter antenna height

above average terrain (HAAT) that occurs at a given distance from the transmitter at 50% of locations and 90% of the time. (The analog field strength figures, however, include an extra 6, 5, and 4 dB for the three channel groups which raise the time fading factor from median (50%) to 90 percent; in effect, then, the analog system is intended to deliver an acceptable picture 90% of the time at 50% of locations.)

29. In addition, while the two VHF bands have fixed minimum required field strength values for their entire respective frequency bands based on their geometric mean frequency, the FCC chose to modify UHF band values with a correction factor. This correction represents the dipole factor, which takes into account the fact that for a given RF field strength, the voltage output from a ½-wave dipole antenna (terminated in a matched impedance) decreases with increasing frequency.

30. The NTSC field strengths in **Table 1** are the same as those used over the years. However, the DTV field strength values in **Table 1** are determined from the DTV planning factors identified in **Table 2**, and statistically characterize the equipment -- including outdoor antenna systems -- used for home reception. That is, they represent a "typical" DTV receive site system in the modern era.

Planning Factor	Symbol	Low VHF	High VHF	UHF
Geometric Mean Frequency (MHz)	F	69	194	615
Geometric Mean Wavelength (m)	λ_m	4.3	1.5	0.5
Geometric Means Wavelength (feet)	λ_{ft}	14.3	5.1	1.6
Dipole Factor nominal (dBm-dBμ)	K_d	-111.8	-120.8	-130.8
Dipole Factor adjustment	Ka	None	None	See text
Thermal Noise (dBm/6 MHz)	N_t	-106.2	-106.2	-106.2
Antenna Gain (dBd)	G	4	6	10
Antenna Front/Back Ratio (dB)	FB	10	12	14
Downlead Line Loss, 50' cable (dB)	L	1	2	4
System Noise Figure (dB)	N_s	10	10	7
Required Carrier Noise (dB)	C/N	15	15	15
Calculated Minimum Rx Power (dBm/6 MHz)	P_{min}	-81	-81	-84

Table 2 FCC's planning factors for a typical DTV receive site.

31. The minimum required DTV field strengths can be obtained from the planning factors in **Table 2** by viewing the block diagram in **Figure 1**. The equation for the minimum required field strength E at the input to the antenna can be created by starting at the DTV receiver input and working back to the antenna. The equivalent noise floor at this point is the kTB noise (i.e., the theoretical amount of noise in a matched resistor) plus the noise figure (NF1) of the receiver (*i.e.,* the excess noise that the imperfect receiver adds to the theoretical kTB noise). The minimum required S/N ratio for the 8-VSB system is added to the noise floor, providing the minimum required signal level at the input of a DTV receiver for error-free operation. The coaxial cable downlead loss (L) is then added, providing the minimum required signal power at the output of the antenna. The dipole factor (Kd) is then taken into account, which consists of two components: the conversion between voltage to power as well as the dipole antenna conversion between field strength and voltage. The resulting field strength is the minimum required level at the input of a ½-wavelength dipole antenna for error-free DTV operation. However, the FCC's planning factors account for a typical receive site that uses a directional outdoor antenna with directivity and gain (Ga) that is then subtracted, indicating that

less field strength is needed when an antenna with gain is employed. The following equation represents the DTV field strength calculation, along with the UHF receive site parameter values:

$$E\ (dB\mu V/m) = (Nt + NF1) + SNR + L + Kd - Ga$$

$$E\ (dB\mu V/m) = (-106.2\ dBm/6\ MHz + 7\ dB) + 15.2 + 4 + 130.8 - 10 = 40.8\ dB\mu V/m$$

32. The above value of 40.8 dBμV/m, which the FCC rounds to 41 dBμV/m, is for Channel 38 (*i.e.*, 615 MHz) only. In OET Bulletin 69, the minimum field strength at other UHF channels is determined by applying the dipole factor. (As mentioned, for purposes of SHVERA, Congress has "locked in" 28, 36, and 41 dBu as the relevant field strengths for the three channel bands.)

33-35. [Intentionally omitted.]

The Commission's Planning Factors
For Digital Reception Equipment

36. In its Notice of Inquiry, the Commission asks for comments on a number of issues relating to consumer equipment setups. We address those issues here.

37. **Rooftop versus indoor antennas**. The Commission asks whether the digital reception standard should be premised on a *rooftop* antenna or instead on an *indoor* antenna. NOI, ¶ 7. For several reasons, the logical choice is to assume a rooftop antenna.

38. First, the reception characteristics of indoor antennas are much worse than those of outdoor, rooftop antennas. As a recent research paper confirms (**Ref 12**), indoor antennas have much less gain -- and in some cases actual losses as compared to a dipole -- while good outdoor antennas offer substantial gain, in line with the Commission's planning factors. Also, because indoor antennas are placed at a lower height (sometimes below ground) and behind walls, their lower inherent gain (or loss) characteristics are exacerbated. *See* NOI, ¶ 20 ("indoor-mounted antennas will generally receive weaker signals than outdoor-mounted antennas"). In

addition, indoor antennas generally have little or no directivity and therefore they are more susceptible to reception problems from both multipath and interference. They are also affected by the movements of people near the antennas, which can abruptly change the antenna's reception pattern.

39. Because of these many ways in which rooftop antennas are superior to indoor antennas, households have long used rooftop antennas to achieve over-the-air reception. In fact, many rural viewers have placed large (high gain) over-the-air antennas *higher* than rooftop level, on small towers near the household. These tower setups not only provide more signal level (because of higher gain and higher elevation) but also reduce multipath effects with greater antenna directionality.

40. A second reason rooftop antennas are the logical choice is this: the households at issue are those of satellite subscribers -- and satellite reception antennas (usually called "satellite dishes") can only be used outdoors, typically on a rooftop. An "indoor" satellite antenna would simply not function. Since satellite antennas must be located outdoors, and usually on the roof, there is no reason over-the-air antennas cannot be similarly located.

41. Third, the entire process of allocating digital channels to TV stations, of determining their coverage area, of replicating analog coverage areas, and of assessing the power levels at which the stations should operate, are all critically based on the assumption of a rooftop over-the-air reception antenna. As the Commission correctly observes in its NOI, the minimum DTV field strengths for the noise-limited contour "presume that households will exert similar efforts to receive DTV broadcast stations as they have always been expected to exert to receive analog NTSC TV signals." NOI, ¶ 6. Broadcasters are building an multibillion-dollar digital

broadcast system premised on rooftop antennas, and it would be a fundamental change in engineering principles -- with very large economic consequences -- to reverse course now.

42. **Proper vs. improper antenna orientation**. The Commission also asks whether it would be appropriate to assume that the over-the-air antenna is properly oriented to achieve the best reception from the station in question. NOI, ¶ 7. For reasons similar to those just discussed, the Commission should assume proper orientation.

43. First, as with the rooftop-vs.-indoor issue, a DBS household gets no satellite reception unless its dish is *precisely oriented* towards the carrier's geosynchronous satellite. Holding the household's over-the-air antenna to the same expectation appears reasonable. Second, as discussed above, the Commission's entire effort in developing its digital television assignments has been grounded in the assumption of properly-oriented rooftop antennas for reception of digital television signals.

44. Of course, in many markets TV towers are (nearly) co-located, making it possible to orient a *fixed* rooftop antenna accurately towards all of the network affiliate towers in a particular market. This is particularly true for viewers that are some distance from the transmitter locations because the farther the viewer is from the transmitter, the *difference* in bearing angles for the various stations become smaller. In general, many markets have essentially co-located facilities which makes the orientation of the receive antenna a simple matter. Currently, about 83% of the television markets with four network affiliates (112 of 135 markets) have essentially co-located transmitter sites. In these markets, a single antenna oriented in the general direction of the transmitter sites should be sufficient for good digital television reception. To the extent that towers are located in different directions in other markets, local electronics installers may offer a special, fixed antenna that is designed to receive signals from two different directions.

These antenna systems were developed over the years to allow customers to receive signals from adjacent markets or stations within the same market with disparate tower locations. Typically, these antenna systems consist of two receive antennas that are combined with a simple 3-dB hybrid combiner. This allows a receive antenna system that is directional in the bearings of the desired signals without the need for re-orienting the antenna when changing channels.

And when those solutions are unavailable to a viewer, manufacturers have long offered reasonably priced rotors that enable a rooftop antenna to be moved to achieve the best orientation for a particular station. In fact, today rotors are available with advanced features, including presets for particular stations as well as remote control operation. For example, the Channel Master Model 9521A allows the consumer to program the rotor controller to respond to the infrared (IR) commands from their TV set's remote control. The rotor controller receives these channel commands and then actuates the rotor to the appropriate bearing for the channel requested by the TV set remote control. Thus, the rotor automatically orients for the consumer without the need to operate the rotor manually. This makes the antenna orientation experience appear seamless to the viewer.

Table 3 illustrates some of the available rotor units.

Manufacturer	Model	Special Features	Cost
Pacific Custom Cable	200-600		$95.00
Pacific Custom Cable	200-603	Remote Control	$105.00
Channel Master	9521	Remote Control with 69-channel memory	$69.95
Centron	AR-500XL	Remote Control with 12-channel programmable memory	$69.95
GEMINI	OR360	Heavy Duty Automatic Antenna Rotator	$49.95
Hy-gain	AR-35		$69.95
JVI	MAR160		$54.95
Magnavox	M61415		$49.95
Radio Shack	15-1245	Separate remote controller ($54.99 extra)	$74.99
Warren Electronics	32-9015		$59.95
Antennacraft	TDP2		$94.88
Yaesu	G-450A	Handles larger weight loads then the others above	$249.00

Table 3 Antenna rotors.

45. **Antenna gains**. The Commission's DTV planning factors assume antenna gains of 4 dB for low-VHF, 6 dB for high-VHF, and 10 dB for UHF. These assumptions are realistic. As recently tested by engineer Kerry Cozad of Dielectric, for example, the measured Channel Master 4228 antenna offers gain figures for high-VHF digital signals and for UHF digital signals that exceed those specified in the planning factors (**Ref 12**). As Mr. Cozad's paper shows, the Channel Master antenna achieves gains of about 14 or 15 dB for most UHF channels, while the planning factors call for a gain of only 10 dB for UHF. For high-VF, the paper shows that the Channel Master antenna achieves gains of about 8 or 9 dB, compared to the assumption in the planning factors of only 6 dB of gain. Even for low-VHF -- a channel range in which very few network affiliate stations will broadcast in digital -- the Channel Master antenna offers gains nearly as high as those specified in the DTV planning factors (the slight deficiency in the gain values at low-VHF can easily be overcome with an LNA). The Channel Master antenna is available from a variety of vendors for between $38 and $50. Further information can be found at www.winegard.com/products.htm.

46. Another antenna to consider is the Winegard Square Shooter SS-1000 consumer antenna. This new high-VHF and UHF antenna exhibits good gain and front-to-back characteristics despite its aesthetically-pleasing design and compact size of 16" W x 16"H x 4" D. The antenna can easily attach inconspicuously to the side of a wall, or even act as an extension to a satellite dish (*e.g.*, it meets DirecTV and Dish Network's wind load requirements). The 4.5 dB reported gain across the UHF band is below the FCC planning factor, but can be easily be increased using an external LNA. Or, the related Winegard Square Shooter 2000 can be used; it is the same antenna design, but has an *internal* broadband 12-dB amplifier that boosts the signal (equivalent net antenna system gain averaging about 15 dB across the UHF band), lowers the effective system noise figure, and minimizes any mismatch losses. The Winegard SS-1000 antenna is available from Solid Signal for $87.99 and the SS-2000 is available for $98.99. *See* www.solidsignal.com/search_results.asp?main_cat=0&search_crit=square+shooter&Site REF=SSCOM. Further information can be found at www.channelmaster.com/home.htm.

47. **Front-to-back ratio**. The DTV planning factors assume an antenna front-to-back ratio of 10, 12, and 14 dB for low-VHF, high-VHF, and UHF, respectively. The Channel Master 4228 rooftop antenna does considerably better than the planning factors assume, with a front-to-back ratio of roughly 25 dB for VHF and 18 dB for UHF. Based on manufacturer's published specifications, the Winegard Square Shooter SS-1000 and SS-2000 antennas have 16 dB of front-to-back ratio at Channel 32 (with an average of 15 dB across UHF band).

48. **System noise figure**. The Commission's planning factors assume a receive system noise figure of 10 for VHF channels and of 7 for UHF channels. These VHF and UHF noise figure values plus the accepted 8-VSB system's 15 dB white noise threshold for errors predict minimum receiver input levels (also called sensitivity values) of –81 dBm and –84 dBm,

respectively. Although there is little published data about receiver noise figures for DTV receivers, use of a low-noise amplifier (discussed in the next section) effectively reduces the overall noise level of the system.

49. **Use of low-noise amplifier**. Consumers can readily, and at modest cost, do much *better* than the DTV planning factors for receive sites by using a mast-mounted low noise amplifier (LNA), or "preamplifier," which boosts the signal before it is sent through the downlead cable into the consumer's home. **Figure 3** contains the block diagram of receive site system that uses an LNA to provide more margin for DTV reception. The equations, similar to the ones in **Figure 1**, illustrate how the minimum antenna input field strength can be calculated. The use of a preamplifier has three advantages. First, the preamplifier increases the received signal level before being attenuated in the downlead coaxial cable. Second, the preamplifier's low noise level effectively lowers the equivalent noise figure of the receive system since the LNA is an external device that can easily have a noise figure that is 4-7 dB *lower* than the DTV tuner. Finally, the preamplifier mitigates any impedance mismatch loss between the antenna and the DTV receiver (tuner). These benefits allow an LNA to easily add at least 12-15 dB (and often significantly more) of *effective* gain to a receive system, even with a "below-par" receive system that would not otherwise meet the FCC planning factors.

50. Low-noise amplifiers are readily available at moderate expense for mounting on the rooftop antenna mast. Many work with both the VHF and UHF bands, while others are optimized for just the UHF band. Because of their benefits and low cost, preamplifiers are commonly used to boost reception at locations when signal strength may be close to the margin. Four common LNAs that are currently on the market were tested in the laboratory, and the performance test results are summarized below in **Table 5**.

Parameter	Channel Master Titan 2	Winegard AP-8700	Blonder-Tongue CMA-Uc	Radio Shack 15-2507
Average UHF Gain	23 dB	19 dB	18 dB	30.1 dB
Average UHF Noise Figure	3 dB	3.5 dB	4 dB	4.8 dB
Cost	$56.99	$78.58	$164.00	$59.99

Table 5 LNA "preamps".

51. Signal amplification is available in values between 18–30 dB and the noise figure value between 3–5 dB. The availability of these preamplifiers (and similar ones from other manufacturers) provides a substantial "cushion" against the possibility of any losses not specifically accounted for in the planning factors.

52. [Intentionally omitted.]

53. **Downlead line loss**. As the planning factors recognize, a certain degree of signal loss occurs as the signal moves from the rooftop antenna through a cable to the household's television equipment. The planning factors assume losses of 1 dB for low-VHF, 2 dB for high-VHF, and 4 dB for UHF. Based on published data for standard RG-59 and RG-6 coaxial cable, these figures are conservative. RG-6 coaxial cable, which is commonly used in satellite installations, offers other benefits as well: improved shielding to help prevent extraneous signals (such as signals generated within the home) from leaking into the system. A brief summary of different coaxial cable types is in **Table 6**. Note that the loss numbers stated below are for the worst case -- channel 69 -- which is outside the digital core; line losses for channels within the core will be lower.

Manufacturer Model #	Belden 1186A	Belden 1152A	Belden 1189A	West Penn 819	West Penn 6350	Units
Type	RG-59	RG-6	RG-6	RG-59	RG-6	-------
Impedance	75	75	75	75	75	Ohms
Attenuation (UHF CH 69)	2.9	3.3	2.7	3.1	2.3	dB/50'

Table 6 Coaxial cable types

The most expensive cable shown above costs about $25 for the typical 50' cable lengths assumed in the FCC planning factors. Thus, it is reasonable to assume that consumer setups will be at least consistent with the DTV planning factors for downlead line loss.

54. **Conclusion**. In short, consumers can acquire, at relatively modest expense, reception equipment that is substantially better than what is assumed by the DTV planning factors. In determining how to measure the availability of an over-the-air digital signal at a satellite subscriber's household, the Commission should therefore assume that, in the words of the Notice (at ¶ 6), that "households will exert similar efforts to receive DTV broadcast stations as they have always been expected to exert to receive NTSC analog TV signals," including the use of directional rooftop antennas with significant gain. For households where signal strength is close to the margin, the optional availability of a modestly-priced preamplifiers provides a significant buffer against any signal losses not accounted for in the planning factors.

Procedures For Measuring Signal Intensity At Individual Households

55. In its Notice of Inquiry, the Commission asks whether its existing procedures for measuring signal intensity at individual households for purposes of the Satellite Home Viewer Act (and successor legislation), which are set forth in Section 73.686(d), are appropriate for measuring digital signal strength. NOI, ¶ 12-13. As the Notice explains, the existing procedure

calls for measurements to be taken at five locations near the household, with an antenna raised to nine meters above ground level.

56. The Commission's existing procedures for measuring analog field intensity at particular locations in Section 73.686(d) are a modest variant of the standard engineering protocol used worldwide for verifying coverage, verifying transmit antenna radiation patterns, and developing propagation algorithms used in planning for allocation of broadcast station spectrum. With certain minor adjustments, the procedures set forth in Section 73.686(d) will work well for measuring *digital* signal strength.

57. The first necessary adjustment is obvious: when testing for the availability of a digital signal, the minimum field strength values will be different (*e.g.* 41 dBu for UHF) than for analog signals. In addition, as the Commission observes, unlike with analog, there is no visual carrier for digital signals, so measuring the visual carrier is not an option. NOI, ¶ 13.

58. A second necessary adjustment is this: the instrument used to measure DTV signal strength in the field must be different from the ones currently used to measure the narrow-band NTSC video signal. Use of existing analog NTSC field strength meters will *not* be sufficient, since they do not measure the entire DTV signal power, which utilizes almost the entire 6 MHz channel (DTV has an equivalent noise bandwidth of 5.381 MHz). The Commission defines DTV signals by their *integrated average power* in a 6 MHz bandwidth, whether describing transmitter power output (TPO), its effective radiated power (ERP), or its field strength at the input to a receive antenna or the input power to a DTV receiver.

59. A power measurement instrument must therefore be used that can tune to the center of the DTV RF channel and measure this integrated power over 6 MHz. This instrument may take the form of a common swept-tuned spectrum analyzer that has a variety of small IF

bandwidths from which to select (small compared to the 6 MHz DTV signal bandwidth), and can easily integrate (sum up) the total DTV power across 6 MHz (*e.g.,* by use of band power markers). Examples of such instruments are the Agilent E4402B or Rhode & Schwarz FSH-3 spectrum analyzers. However, a low-noise amplifier should be included prior to the power measurement instrument to ensure that the receive system measurement sensitivity (antenna, coaxial cable, and power measurement device) is sufficient to accurately measure the weakest of signals (i.e., 41 dBuV/m). Alternatively, the power measurement device can take the form of a calibrated field strength meter that has one fixed narrow bandwidth, but can be *swept* across the entire 6 MHz band -- integrating the power in each IF sub-band as it sweeps to produce the correct total power. An example of such an instrument is the Z-Technology R507 that is routinely used for measuring DTV field strength in coverage testing. Finally, such a power measurement device could take the form in the future of a calibrated fixed tuned receiver that has an IF bandwidth equal to the 6 MHz DTV channel. But under no circumstances should a power measurement device simply measure the pilot power in a narrow band, and then calculate the total power from this value. This is due to the fact that in the field, multipath can create sharp peaks and valleys in the DTV spectrum that, if one is measuring only a narrow band, could easily cause measurement errors in the ± 10-dB range.

60. In addition, the testing should ***not*** be done with a simple half-wave dipole but with a calibrated directional antenna with characteristics consistent with the planning factors, such as the Channel Master 4228 or the Winegard Square Shooter SS-2000. Based on our practical experience from thousands of field tests, use of an antenna with gain helps greatly in ensuring that the power levels (after line loss) are sufficiently high to permit accurate measurements at all channel ranges. Also, a calibrated directional antenna should be utilized

rather than a simple ½-wave dipole antenna since a ½-wave dipole antenna has very little directivity and no front-to-back ratio protection as would be needed per the FCC allocation planning assumptions. Significant measurement errors could easily occur from multipath signals from the rear as well as from nearby interfering analog and digital stations if a simple ½-wave dipole antenna were used.

61. The height of the receiving antenna above ground level should be as set forth in the existing regulation: 20 feet for one-story residences, and 30 feet for two-story residences. The Commission should not permit testing to be done of *indoor* antennas, a step that would be inconsistent with the premise of the DTV transition that households will make the same efforts to receive digital signals that they have historically made to receive analog signals. In addition, indoor testing would be impossible to standardize.

Use of Signal Strength as a Proxy for Picture Reception

62. In ¶ 14 of the Notice of Inquiry, the Commission inquires about whether *objective* signal strength, or instead some other metric, should be used to determine whether a household can receive an over-the-air digital signal. As we discuss here, an *objective* signal strength test is an excellent proxy for availability of digital service and will avoid the serious technical and practical problems with implementing a *subjective* test – whether for analog or digital service.

63. With both analog and digital television, the availability of a signal level above the minimums set forth in the rules is a very good proxy for ability to receive a picture. (With digital, subject to certain exceptions, if one gets a picture at all, it is a high-quality picture.)

64. There exist abundant empirical data showing that the ability to receive a digital signal above the thresholds specified in the Commission's rules (*e.g.*, 41 dBu for Channel 38) is

in fact a strong indicator of ability to receive a high-quality digital picture. Between 1994 and 2001, engineers conducted thousands of field measurements – in 15 separate measurement programs for different digital transmitters, across 12 different cities – to evaluate both (i) whether a signal above the minimum field intensity was present at a particular location and (ii) if so, whether the system achieved successful *reception* at that location. For present purposes, the key statistic from these tests is the "System Performance Index": the percentage of sites with signal levels above the FCC-defined minimum field strength value that had successful DTV reception. This statistic is relevant for the Commission's current purposes, namely determining whether signal strength is a good proxy for the ability to receive a picture. (Again, with digital, it will generally be true that if one can receive a picture at all, it will be a high-quality picture.)

65. Before discussing the results of these studies, an important qualification is in order: the receivers used for *all* of these tests were, by present standards, relatively primitive. As discussed in more detail below, this fact is significant, because newer-generation receivers are far better than the receivers used in these historic tests at handling difficult reception environments, and in particular at resolving multipath problems. Thus, if the same tests were done today, one can be confident that the System Performance Indices for these locations would be higher still.

66. The DTV receiver used in 11 of the 15 field testing programs was the original Grand Alliance prototype ("blue rack") receiver. This hardware is now known to have significantly worse equalizer performance than either fourth generation receivers (widely available today) or the fifth generation receivers discussed in detail below. As documented in recent years (**Ref 13, 14**), the Grand Alliance receiver had an equalizer range of only –3 to +22 usecs compared to the ±50 usec of the fifth generation receiver. It also did not apply data-

directed equalization to the decision-feedback section that handled multipath delays from +3 to +22 usec, and thereby had very poor dynamic performance in this echo delay range. Also, the Grand Alliance receiver did not handle multipath with amplitudes greater than 3 dB (70%), whereas recent 5th generation chip sets easily handle 90 – 95% and even handle 0 dB (100 %) echoes within a certain delay range. Finally, the AGC speed of the Grand Alliance receiver was less than 10 Hz while most modern day DTV receivers utilize speeds greater than 100 or 200 Hz. The four testing programs that did *not* use the original Grand Alliance receiver utilized either a second generation VSB chip (two tests) or a third generation VSB chip (two tests). Not one of these 15 field tests employed a fourth generation (or later) VSB chip in the reference DTV receiver.

67. **Table 7** summarizes the System Performance Index results from the 15 digital field test programs conducted between 1994 and 2001 with these relatively low-quality receivers:

Station Call Letters	City of Testing	CH #	System Performance Index (%)
ACATS	Charlotte 1994	53	95.8
ACATS	Charlotte 1994	6	82.2
WRAL	Raleigh 1997	32	95.4
WGN	Chicago 1998	20	93.7
KICU	San Jose 1998	52	98.7
WCBS	N.Y. City 1998 & 1999	56	88.2
WFAA	Dallas 1999	9	96.1
WMVS	Milwaukee 2001	8	98.2
WHD	Washington DC 1997 & 1998	30	81.9
WETA	Washington DC 1997 & 1998	34	83.4
KOMO	Seattle 1998	38	78.1
KING	Seattle 1998	48	76.8
WKRC	Cincinnati 1999	31	91.9
KYW	Philadelphia 1999 & 2000	26	94.0
KMOV	St. Louis 2001	56	93.4
Average	-------	-------	**90.0**

Table 7 Field Test results from 1994 through 2001

68. As these results show, with low-quality, early-generation receivers, the average System Performance Index across these 15 testing programs was 90%. To the extent that the tests showed that a signal above the minimum was present but that reception was not

successfully achieved, the culprits are in most cases multipath or interference problems. But as discussed below, newer generation receivers do far better at handling difficult reception environments, including "concrete canyon" multipath problems (such as in Rosslyn, Virginia). With these higher-quality receivers – which the DBS companies can readily incorporate into their own set-top boxes – the System Performance Index will likely be even higher than the 90% figure from the tests several years ago.

69. The alternative to an objective signal strength test would presumably be some form of picture quality test. During the testing phase of the digital rollout, engineers have typically checked both signal strength and picture quality. But despite the well-known "cliff effect" for digital pictures, evaluating whether digital reception has been achieved by watching the picture on a screen nevertheless requires subjective judgments.

70. Ordinarily, the digital cliff effect causes a DTV set to either display a moving picture or a blank screen (or blue screen, in some cases). But there are times when the DTV signal is near threshold and occasional excursions below threshold occur, causing occasional (MPEG) "blockiness" or an occasional brief freeze frame. Determining whether this picture is acceptable or not is a subjective assessment, just as with analog television. What makes things even more difficult is the fact that DTV receivers often employ some form of error concealment in their decoder circuitry (such as repeating the macro block information from the last frame) that tends to hide the errors on static portions of the picture. Therefore, the exact MPEG packets lost may or may not show up on the screen for the test viewer, depending on the video content. Evaluating whether there is an unacceptable level of flaws in the picture therefore requires complex and subtle judgments.

71. Expecting difficult subjective judgments to be made fairly and accurately in the hotbed environment of a test at a subscriber's home is not realistic. Because the availability of a signal above the Commission minimums is such a good proxy for successful reception, the Commission should ensure a manageable testing process by continuing to rely on objective signal strength as the key test.

72. Another alternative – which we mention for the sake of completeness but do not recommend -- would be to rely on an additional objective test for assessing whether successful reception can be achieved. This method was developed during the ACATS lab testing at Advanced Television Test Center in Alexandria VA in 1995 (Ref 13). To determine if Bit Error Rate (BER) measurements could be used at ATTC to accurately determine threshold of visibility (i.e., visible errors, or TOV) rather than using expert observers (of the video), a subset of 11 different tests were performed using both methods of TOV determination. The results of comparing the subjective video and the objective BER indicated that TOV could be determined within ± 0.5 dB. Bit Error Rate (BER) was selected at ATTC rather than the preferred MPEG Packet Error Rate (PER) measurement because no third-party test equipment was available at the time of the ACATS testing.

73. Therefore, a professional VSB demodulator, with fifth generation decoder performance and packet error rate (PER) readout capability can accurately, quickly, and objectively determine TOV for a digital signal without having the DTV station go off the air, provided that an appropriate antenna and other test equipment are used. However, because of the added complexity of ensuring that such a test is done correctly, we do not recommend it.

Evaluating the Accuracy of the Longley-Rice Model in Predicting Whether Signal Strength at Particular Locations is Above or Below the DTV Minimums

74. The Commission states in its Notice of Inquiry: "We believe that the modified Longley-Rice is an accurate, practical, and readily available model for determining signal intensity at individual locations when used with analog signals." Based on our experience, we endorse that conclusion; Longley-Rice has an excellent track record of predicting whether particular locations will, or will not, receive a signal above the analog threshold (e.g., 47 dBu for low-VHF).

75. We present here extensive data showing that the same conclusion applies to Longley-Rice's performance in predicting digital signal strength. As discussed above, engineers performed thousands of digital signal intensity tests between 1994 and 2001 in 15 different testing programs in 12 different cities. We have analyzed 2,169 of these locations (those for which data could be analyzed in this time frame) using the same method described by the Commission in its 2000 ILLR Order, namely comparing the Longley-Rice predictions for these locations (*i.e.*, whether the household is predicted to be above or below the signal strength minimum) with the actual measured signal strength for the same locations (*i.e.*, whether the household was measured to be above or below the signal strength minimum).

76. The results show – with a large sample size – that the Longley-Rice model does well when judged against actual measurements. All told, the model correctly predicted that the signal would be above (or below) the noise-limited threshold at 2,047 locations out of a total of 2,169 (94.4%).

Evaluating Whether Addition of a Clutter Factor to the Digital Longley-Rice Model Would Make the Model More Accurate

77. The Commission asks (NOI, ¶ 7) whether it needs to add an extra "clutter" factor to the standard digital Longley-Rice model. (The Longley-Rice model is in part based on actual field measurements (from land mobile measurements in Ohio and Colorado plus the original TASO data from the 1950s), and, to that extent, already takes clutter into account, without the need for a special clutter factor.) As the Commission recognized in 2000, whether a clutter factor will make the standard Longley-Rice model more accurate is an empirical issue. For example, in 2000 the Commission found that adding a clutter factor for analog UHF channels would make the model more accurate, but that adding a clutter factor for analog VHF channels would make it less accurate. *In Re Establishment of an Improved Model for Predicting the Broadcast Television Field Strength Received at Individual Locations*, ET Docket No. 00-11 (May 26, 2000). The Commission's finding was based on a review of the accuracy of the model – and the extent to which it "underpredicts" or "overpredicts" actual test results. No model of RF signal propagation will predict correctly 100% of the time, *see* NOI ¶ 15 n.14 ("the absolute intensity of broadcast signals at particular locations and at particular times cannot be precisely determined through predictive means, regardless of the predictive method used."). The goal is therefore to have a model that achieves high accuracy and whose errors are roughly balanced between underpredictions and overpredictions.

78. For the small percentage of cases (5.6%) in which the Longley-Rice model did not accurately predict whether the location would be above or below the noise-limited threshold dBu level, we have performed a similar "overprediction / underprediction" analysis of the Longley-Rice model. The results show that the model is already in balance without the addition of an extra clutter factor. The incorrect predictions (122 locations out of 2,169) were split

between 49 locations where the measured value was greater than the predicted and 73 locations where the measured value was less than the predicted value. Breaking the analysis down by TV-bands (low-VHF, high-VHF, and UHF) yields the following **Table 8.**

Band	**Total Number of Sites Measured**	**Correct Predictions**	**Over Predictions**	**Underpredictions**
Low VHF	93	96.8 %	0.0 %	1.1 %
High VHF	464	92.0 %	4.1 %	5.8 %
UHF	1,612	94.9 %	3.4 %	1.4 %
All Bands	2,169	94.6 %	3.4 %	2.3 %

Table 8 Comparison of Measured vs. Predicted Field Strength

(Note: Based upon 41dBu Threshold for UHF)

79. [Intentionally omitted.]

Challenges In Implementing a Digital Longley-Rice Model in the Near Term for Purposes of the Satellite Home Viewer Act

80. In a world in which matters have "settled down," Longley-Rice is an excellent predictive model, as discussed above. In the near term, however, the world of digital broadcasting has not settled down, but is in a state of rapid flux.

81. The Commission may wish to consider two eras in which the Longley-Rice model might be used for purposes of determining whether households can receive digital signals over the air: the *long term*, after the transition from analog to digital is complete, and the *short term*, before that date.

82. In the long term, when the transition from analog to digital television broadcasting is complete, there *may* be an unavoidable need for a digital Longley-Rice model to predict which households are "unserved" over the air by a station affiliated with the relevant

network. Whether there will be such a need depends, of course, on whether the DBS companies have then completed their rollout of digital local-into-local service in all 210 DMA. (Under SHVERA, we understand that once digital local-to-local is available in a particular market, the issue of over-the-air availability of digital signals becomes irrelevant. 47 U.S.C. 339(a)(2) ("Replacement of Distant Signals with Local Signals").

83. We understand that DIRECTV has already announced plans to deliver more than 1,500 local stations in high-definition by 2007, beginning with stations in 24 large markets (covering some 45% of U.S. television households) during 2005. Given competition in the industry, EchoStar may well follow suit.

84. Hence, there is an open question whether, at the end of the transition, there will be a need for a "digital ILLR" model to predict signal strength in any local markets. In the meantime, the FCC must report to Congress its views about whether to give legal effect *in the near term* to Longley-Rice predictions about whether particular households are, or are not, able to receive digital signals of network affiliates over the air.

85. In the *short term*, there are serious practical problems with applying the Longley-Rice model, including the following:

a. **Congress has postponed the date on which many broadcast stations can be "tested" – or, presumably, have their digital service predicted by Longley-Rice**. To avoid punishing a station for failing to deliver a digital signal when it cannot reasonably be expected to do so, Congress created a multistage timetable about when particular stations are eligible to be tested. 39 U.S.C. § 339(a)(2)(d)(vii) ("Trigger Dates for Testing"). The schedule includes the following:

April 30, 2006 trigger date for testing:

- stations in the top 100 markets that (i) have chosen a tentative digital television service channel designation that is the same as the station's current digital television service channel, and (ii) that have not been granted a testing waiver pursuant to 39 U.S.C. § 339(a)(2)(d)(vii); and
- stations in the top 100 markets that have been found by the Commission to have lost interference protection.

July 15, 2007 trigger date for testing:

- stations in the top 100 markets that (i) have chosen a tentative digital television service channel designation that is different from the station's current digital television service channel, and (ii) that have not been granted a testing waiver pursuant to 39 U.S.C. § 339(a)(2)(d)(vii); and
- stations below the top 100 markets that have not been granted a testing waiver pursuant to 39 U.S.C. § 339(a)(2)(d)(vii).

Unknown future trigger dates for testing:

- ***translator stations*** will be subject to testing "one year after the date on which the Commission completes all actions necessary for the allocation and assignment of digital television licenses to television translator stations," except to the extent that the translator station has been granted a testing waiver pursuant to 39 U.S.C. § 339(a)(2)(d)(ix);
- ***full-power stations that have obtained testing waivers*** will continue to be exempt from testing for as long as the Commission continues to approve six-month extensions of an existing waiver.

* * * * * * * * * * * * * * * * * *

In the context of a *predictive model*, this is a high level of complexity to manage.

b. <u>Many stations that are *exempt* from having their digital signals evaluated would require analog predictions as an alternative</u>. We understand that under the Satellite Home Viewer Act and its successors, a household is unserved if it cannot receive a signal from *any* facility transmitting a station affiliated with the relevant network (say, ABC). Thus, if a household can receive a signal from a *translator* that retransmits the signal of an ABC station, the household is not eligible to receive a distant ABC station. Similarly, if the household can receive a signal from a nearby ABC station, it is not eligible to receive a distant ABC station, whether or not the station happens to be in the same local market as the subscriber. Thus, if a household in a top-100 market can receive a digital signal from a CBS station over the air from a neighboring below-top-100 market, we understand that it is not eligible to receive a distant signal, whether or not it can receive the signal of the CBS station in the larger market.

As indicated, Congress has ruled that certain stations may not have their digital signal "tested" until some time in the future. This principle would presumably apply to any predictive model as well.

What does this "no testing / no prediction" rule mean as a practical matter? Consider the following example: suppose a household near the Shenandoah Mountains in Virginia is now predicted to (and can) receive an analog signal of a Washington, D.C. network affiliate from a translator station. Congress has decreed that the digital signal of this translator station cannot be "tested" until some future date – which is no surprise, since the station does not even have a digital channel assignment yet. How, then, should this translator station – which is currently transmitting only in analog – be treated for purposes of tests, and for purposes of predictions?

If a station is not yet eligible to have its digital coverage evaluated, one must give the station "credit" for its *analog* service area. Thus, when a *test* is performed at such a household, the tester must look for the digital signal of any (for example) ABC affiliate that might be available over the air, and *also* for the analog signal of any ABC affiliate that is not yet subject to digital testing. Since there is no digital signal to test, this appears to be the only logical method of giving stations "credit" for their coverage when they have been excused (for now) from digital testing. This result is also reasonable in that the eventual goal of the digital rollout will be to replicate the stations' current analog coverage areas.

The need for a constantly evolving "analog / digital hybrid" would therefore add still greater complexity to a nationwide predictive model about digital signals.

c. **Station channel assignments are still in flux**. The Commission and the broadcast industry are still in the midst of the "repacking" process and of other regulatory decisions that must be made before all stations settle on their final digital channel. Under the timetable announced last week in MM Docket No. 03-15, not until August 2006 will the Commission issue a Notice of Proposed Rulemaking proposing a new DTV Table of Allotments, which will then be subject to comment by the public and potentially to significant revision by the Commission thereafter. The continuing movement by stations to different channels will add a further challenge to both the testing process and to application of the Longley-Rice model.

86-91. [Intentionally omitted.]

92. This does not mean that the Longley-Rice model would have no role in determining subscriber eligibility for distant signals in the short run: we understand that the Act already provides that households predicted by the ILLR model to be unserved by over-the-air *analog* stations are eligible to receive distant digital stations. Thus, the convenience to both

consumers and satellite companies of the ability to rely on a predictive computer model will continue to be available.

Major Improvements in Fifth-Generation DTV Receiver Boxes

93. As discussed above, even with early and unrefined digital receivers, the results of thousands of real-world tests show that if a digital signal above the noise-limited threshold is available, it is possible to achieve successful (and high-quality) DTV reception 90% of the time. That figure will increase substantially in the near future: the results of extensive lab and field tests show that fifth-generation DTV receivers achieve far better performance in difficult reception environments (such as multipath) that contributed to the small number of reception failures in past tests. Since DBS customers regularly replace their set-top boxes for a variety of reasons anyway, and since the DBS firms are currently in the process of switching their customers to new set-top boxes for another reason (to use MPEG-4 compression),[1/] it will be a simple matter for most DBS customers to be able to take advantage of this advanced technology. Indeed, while the DBS companies collectively have tens of millions of subscribers, the number of DBS subscribers who have *high-definition-compatible* receivers is vastly smaller. Only DirecTV and EchoStar know these numbers for certain, but our understanding based on industry information is that they are very low.

94. Since the adoption of the DTV standard and the first DTV receivers appeared on the market in late 1998 and early 1999, there has been a new "generation" of VSB receiver approximately every two years. Using the information learned from DTV field tests and RF field

---

1/ *See Sharper Vision For Local Ambitions: DirecTV Places a Big Bet on High-Definition Local Channels*, Multichannel News (May 23, 2005) ("Even DirecTV subscribers who already watch national HD programming will need new dishes and receivers using MPEG-4 (Moving Picture Expert Group) compression technology to receive local HD signals."); *EchoStar Wants to 'See the Playing Field' Before Making HDTV and Broadband Bets*, Satellite Week (May 9, 2005) (discussing expanded rollout of MPEG-4 in 2006 including production of new set-top boxes)

data captures, novel equalization algorithms and advanced hardware architectures have been developed to handle severe multipath conditions. Using a variety of new simulation tools, much was learned about real-world propagation environments, which led to the departure from traditional implementation hardware. Along with improved equalization capability, synchronization (carrier, clock, & data packet) and tuner overload performance have been improved as well.

95. To appreciate where the DTV receiver has come from, a bit of history is helpful. The performance improvement of the various generations of DTV receivers has been significant (**Ref 15**), as can be seen from **Figure 2**. The first- and second-generation receivers had very short pre-echo and post-echo equalizer ranges, limiting their performance to short ghosts. Note that any multipath that is *longer* than the equalizer hardware (equivalent to a tapped delay line) can only withstand an 18% ghost (i.e., D/U = 15 dB) under *strong* signal conditions before the data eyes are closed and the forward error correction (FEC) overrun. In weak signal conditions (i.e., low SNR), the situation is even worse in that a ghost *smaller* than 18% along in concert with the receiver's white noise can close the data eyes and cause errors. In addition to this liability, the early receivers did not use the predictive slice methodology for creating the sliced data-directed reference signal for the equalizer's ghost-canceling algorithm, thus weakening its performance.

96. The third generation recognized the need to handle longer ghosts, and therefore increased the equalizer *range* of post-echoes significantly ($\approx$ 45 μsec) and increased the Doppler tracking speed as well as the robustness. However, the pre-echo cancellation range was not increased.

97. Each generation of 8-VSB receiver has had major improvements, but the fourth generation offered the most significant improvement up to that time. In that generation, designers recognized that pre-echoes were just as important as post-echoes, and addressed the issue in part. (Pre-echoes occur when the main signal (direct path) is attenuated by terrain or some object, and a delayed version of the signal is stronger than the main signal.)

98. The most remarkable improvement, however, has come with the fifth generation receivers. The primary goal of the fifth generation receiver was improved indoor DTV reception with simpler antennas, minimal antenna positioning, and stable reception in the presence of moving people within the room. But as discussed below, the success of the fifth generation receivers in combating multipath also makes for superior results with outdoor antennas in areas with such reception challenges.

99. With fifth-generation receivers, the new equalizer architecture and algorithm enhance convergence under combinations of complex multipath and noise. Equalizer convergence to the correct final solution in a speedy manner has been improved by *starting* the process with an accurate estimate of the severely distorted channel response rather than starting from a fixed condition. Equalizer range has been significantly increased (*e.g.*, 50 μsecs) in *both* pre-echo and post-echo directions. LMS algorithms track moving (Doppler) multipath, aided by new zero-delay trellis decoders that provide fast, accurate error estimates for the equalizer algorithm from the 8-level data.

100. In both *lab* testing and *field* testing, the new fifth-generation VSB receiver has outperformed previous generations of DTV receivers.

101. In lab tests, the receiver has been confronted with severe multipath "ensembles" – recordings of RF transmissions in severe multipath environments. **Table 9** (from **Ref 15**) describes the various test ensembles, and the receiver performance of each generation.

Multipath Description	**2G**	**3G**	**4G**	**5G**
ATTC D	**Pass**	**Pass**	**Pass**	**Pass**
Brazil A	**Pass**	**Pass**	**Pass**	**Pass**
Brazil B	*Fail*	*Fail*	*Fail*	**Pass**
Brazil C	*Fail*	*Fail*	*Fail*	**Pass**
Brazil D	*Fail*	*Fail*	*Fail*	**Pass**
Brazil E	*Fail*	*Fail*	*Fail*	**Pass**
CRC-3	*Fail*	*Fail*	*Fail*	**Pass**
CRC-4	*Fail*	*Fail*	*Fail*	**Pass**

Table 9 VSB Generation comparison of multipath performance (multipath complexity increased from top to bottom)

102. When a fourth generation and fifth generation receiver were compared to each other in the lab using the 50 RF field data captures (from Washington, D.C. and New York City) recommended in the A/74 ATSC Receiver Performance Guidelines (**Ref 16**), the number of "reception failures" was cut by a factor of five.

103. The results of *field* tests are similarly encouraging. As reported in a paper published by the IEEE, when tested in the field in Washington, D.C. (MSTV), Ottawa Canada (Canadian Research Center), and Baltimore, MD (Sinclair Broadcast Group), similar dramatic improvements were documented between older generations and the new fifth generation VSB receiver. In Washington and Baltimore, engineers visited not *typical* receive sites but *known, difficult* receive sites – and nevertheless found that the fifth generation receiver was able to achieve reception where prior generations had failed.

Additional Information About Lab Testing Of Fifth Generation Receivers

104. Two early versions of fifth generation VSB decoder prototype chips were *independently* tested at Communication Research Centre (CRC) in Canada. These test results indicated a significant improvement in multipath performance.

105. In the Linx test (**Ref 17**), Linx Electronics Inc. (now owned by Micronas) sent an early prototype rack (FPGA circuit board encased in a 19" rack) to CRC to be tested in March 2002. The new prototype was a state-of-the-art receiver "designed to operate under severe channel degradation, including the possible nulling of the VSB pilot." The hardware contained a single-conversion consumer-grade tuner and a 10-bit A/D converter, along with an equalizer with "a unique configuration that enables proper equalization of strong ghosts while minimizing equalizer noise enhancement."

106. In the Zenith/LGE test (**Ref 18**), an early prototype rack was tested in September 2003. Likewise, it had significantly new architecture design that provided significant improvement in multipath cancellation. Similar tests were performed on the LGE unit as was done on the Linx unit. (The data is summarized below.)

107. While many tests were performed at the CRC labs, the following is a brief discussion of some of the pertinent tests that illustrate the primary improvements to the DTV equalizer and tuner performance.

108. The first comparison test is the white noise threshold test, which is performed with no impairments or signal distortion to the DTV signal other than added noise. Both prototype 5G units have the characteristically low white noise threshold of just over 15 dB, C/N that contributes to the needed sensitivity of DTV receivers The results are shown in **Table 10**.

Laboratory Test	Linx	LGE	Units
White Noise Threshold (TOV @ -53 dBm moderate level)	15.1	15.5	dB

Table 10 White noise performance

109. **Table 11** contains the multipath delay range test results for both prototype units. A significant increase in pre-echo range can be observed and compared to that offered in past VSB decoder generations, which is advantageous in hilly outdoor reception situations near the fringe of the coverage area as well as in near urban areas with no direct line-of-sight to the transmitter (e.g., "concrete canyons" of major downtown areas).

Laboratory Test	Linx		LGE		Units
-10 dB echo	-30	+39	-49	+49	usec

Table 11 Multipath delay range.

110. From **Table 12**, it can be observed that severe static multipath was handled by both prototypes, with minimal noise enhancement. Brazil E is a pathological case with three 100% ghosts, each 1 usec longer than the next, and exactly phased the same. It is supposed to represent the worst-case condition for a single-frequency network (SFN) at one particular location where three signals are exactly equal in strength. Excluding this special, unique case, only 3 or 4 dB extra signal strength is needed in the main DTV signal to overcome the noise enhancement in the equalizer due to these severe multipath conditions. Note that some of the C/N values are less than the white Gaussian noise threshold value. This is due to the definition used at CRC for describing the multipath. All carrier signal levels (signal plus pilot) are referenced to the *non*-ghosted signal, so when some of the multipath ensembles are created with very short ghosts, these short ghosts added in phase with the original signal to provide a greater signal level than without the ghost.

Laboratory Test	Linx	LGE	Units
Brazil A *Static* Ensemble plus white noise	15.3	15.6	C/N (dB)
Brazil B *Static* Ensemble plus white noise	19.4	18.6	C/N (dB)
Brazil C *Static* Ensemble plus white noise	12.5	14.4	C/N (dB)
Brazil D *Static* Ensemble plus white noise	13.0	14.5	C/N (dB)
Brazil E *Static* Ensemble plus white noise	22.8	23.8	C/N (dB)
Special Brazil C *Static* Ensemble plus white noise	12.6	16.5	C/N (dB)

Table 12 *Static* ensemble multipath plus noise performance.

111. Even when looking at *static* ensembles in **Table 13** where one of the paths is increased until TOV is reached, 0 dB (100%) ghosts are canceled in addition to the other "lower-level" ghosts. While the 4th generation VSB decoder chips performed significantly better than earlier receivers and work well in both outdoor and indoor reception venues with directional antennas, this level of 5th generation multipath performance has not been achieved in any of the previous generations of VSB chips.

Laboratory Test	Linx	LGE	Units
ACATS #286 Static Ensemble, strongest ghost level	0	0	dB
Modified Brazil C Static Ensemble, strongest ghost level	0	1.3	dB
Modified Brazil D Static Ensemble, strongest ghost level	0	0	dB

Table 13 Static ensemble multipath with one strong component performance.

112. Finally, NTSC-into-DTV interference testing was performed, as shown in **Table 14**. The co-channel interference results indicate an ability to reject the strong NTSC co-channel to about 3-4 dB, D/U (i.e., average DTV signal power to peak envelope sync NTSC power). The adjacent channel NTSC interference is rejected to values beyond the –40 dB, D/U value.

Laboratory Test	Linx	LGE	Units
Co-channel	3.9	3.1	dB, D/U
Lower Adjacent Channel	-43.7	-42.0	dB, D/U
Upper Adjacent Channel	-39.9	-41.8	dB, D/U

Table 14 NTSC interference rejection.

113. Note that the above tests at the CRC labs are 2-3 years old and made on *early* prototype receivers (designed with FPGA chips). Both chip manufacturers have since received their initial integrated chips and have stated that improvements over the prototype hardware have been achieved. Both companies also state that fifth generation VSB consumer products will be available on the market this year (2005), well before the April 2006 date on which the first testing of digital signals of a limited number of stations can begin under SHVERA.

114. Even critics of the 8-VSB system have been impressed with the 5G-receiver performance in severe multipath sites. After testing the 5G prototype in Baltimore at the same sites at which previous VSB decoders failed, Sinclair Broadcasting put out a press release on June 8, 2004 (**Ref 19**). "We are pleased to see the progress made by Zenith that will allow consumers to easily receive free digital television broadcasts in their homes. Broadcasters and consumers can now look forward to robust DTV service delivered over-the-air without having to subscribe to cable or satellite," said Nat Ostroff, Vice President, New Technology, Sinclair Broadcast Group. He went on to say: "[T]he innovations in the fifth-generation integrated circuit allow it to lock onto signals in severe multipath environments even when the ghosts have long delays or are larger than the main signal."

115. In a similar report, engineer, consultant, and author Mark Schubin in his "Monday Memo" on Thursday July 22, 2004 (**Ref 20**), was apparently not able to wait until the following Monday to publish what he had learned. He stated: "Count me among the believers in the fifth-generation LG/Zenith ATSC receiver! We just did a test this morning in my apartment, and I thought the news was too important not to release immediately. With a simple loop antenna, with no care in the positioning, we were able to pull in seven DTT stations reliably. When I say 'reliably', I mean not only that the pictures and sound were okay but that people could move

around the room and I could move the antenna around without causing any breakup. For the first time, I could receive signals (six channels) from an antenna atop my TV, where I normally get analog channels. I now believe that any "shmo" with reception conditions similar to mine can simply take the receiver out of the box, connect a cheap loop antenna, stick it wherever it looks good, and start to receive ATSC signals from all full-power, full-pattern stations."

Conclusion

116. As consumers transition from analog television to digital television they will need to acquire a digital television receiver. For consumers who wish to receive local TV stations over the air, a modest investment in a good quality rooftop receiving antenna (and preamplifier, in appropriate cases), just as in the analog case, is a reasonable expectation.

117. The performance of digital television receivers continues to improve with each new generation of products that are introduced into the market. The reception capabilities of DTV receivers are continually improving and the performance of 2nd and 3rd generation receivers, as evidenced by the field test results, was sufficient to achieve a 90% System Performance Index. It is reasonable to base the service eligibility criteria on the field strength of the received DTV signal, rather than attempting to conduct subjective quality judgments at thousands of homes. We can expect that this Service Performance Index will continue to increase as new products are introduced.

118. The measurement procedures contained in Section 73.686(d) can be modified easily to reflect proper measurement methodology for DTV signals. The change in measurement instrumentation is the most significant, and there is readily available equipment in the market that is capable of measuring the DTV signal power within the integrated 6MHz channel. Also, these measurements should be performed using an antenna with some gain and directionality in

order to minimize the effects of multipath and other impairments that may lead to inaccurate power measurements.

Respectfully Submitted:

_____/s/_____
William Meintel

_____/s/_____
Gary Sgrignoli

_____/s/_____
Dennis Wallace

REFERENCES

1 ATSC Digital Television Standard, Document A/53B (with amendments 1 and 2), www.atsc.org.

2 Fourth Report and Order, MM Docket 87-268, FCC 96-493, Federal Communications Commission, December 24, 1996.

3 Fifth Report and Order, MM Docket 87-268, FCC 97-116, Federal Communications Commission, April 3, 1997.

4 Sixth Report and Order, MM Docket 87-268, FCC 97-115, Federal Communications Commission, April 3, 1997.

5 Memorandum Opinion and Order on Reconsideration of the Sixth Report and Order, MM Docket No. 87-268, FCC 98-24, Federal Communications Commission, February 17, 1998.

6 "OET Bulletin No. 69: Longley-Rice Methodology for Evaluating TV Coverage and Interference", FCC Office of Engineering & Technology, original version July 2, 1997, revised version February 6, 2004.

7 Code of Federal Regulations, Title 47, Telecommunications, Parts 70-79, Revised as of October 1, 2003.

8 "Digital Television Standard for HDTV Transmission: ATSC Standard", Doc. A53, Advanced Television Systems Committee, September 16, 1995.

9 "Guide to the Use of the Digital Television Standard for HDTV Transmission", Doc. A54, Advanced Television Systems Committee, October 4, 1995.

10 "VSB Tutorial", Richard Citta and Gary Sgrignoli, Montreux Symposium, June 12, 1997.

11 Report 82-100, "A Guide to the Use of the ITS Irregular Terrain Model in the Area Prediction Mode", by G. A. Hufford, A/G. Longley, and W.A. Kissick, US Department of Commerce, April 1982.

12 "Measured Performance Parameters for Receive Antennas used in DTV Reception", Kerry W. Cozad, Dielectric Communications, NAB Engineering Conference, April 2005.

13 "Digital Grand Alliance: Record of Test Results", submitted to Advisory Committee on Advanced Television Services by ATTC, CableLabs, ATEL, Task Forces on Digital Specific Tests (Audio & Field Tests Systems Subcommittee/Working Party 2, ACATS), MSTV, PBS, Hitachi, and IBM, October 1995.

14 "ATSC VSB Transmission System Notes", by Gary Sgrignoli, handout notebook used in VSB Seminars, 6/2/05 (see www.MSWdtv.com).

15 "Performance of 5th Generation 8-VSB Receivers", T. Laud, M. Aitken, W, Bretl, K. Kwak, IEEE Transactions on Consumer Electronics, Vol 50, No. 4, November 2004.

16 "A/74 ATSC Recommended Practice: Receiver Performance Guidelines", Advanced Television Systems Committee, June 18, 2004.

17 "Results of the Laboratory Evaluation of Linx ATSC Prototype Receiver with 8-VSB Modulation for Terrestrial Broadcasting", Final Report, Version 1.4, Communication Research Centre Canada, April 4, 2002 (see CRC website: www.crc.ca)

18 "Results of the Laboratory Evaluation of Zenith5th Generation VSB Television Receiver for Terrestrial Broadcasting", Report, Version 1.1, Communication Research Centre Canada, September 2003 (see CRC website: www.crc.ca)

19 Sinclair Broadcast Group press release, June 8, 2004 (see Sinclair website: http://www.sbgi.net/press/release_200468_72.shtml).

20 "Monday Memo", Mark Schubin, July 22, 2004 (Schubin website: http://www.digitaltelevision.com/mondaymemo/mlist/).

FIGURES

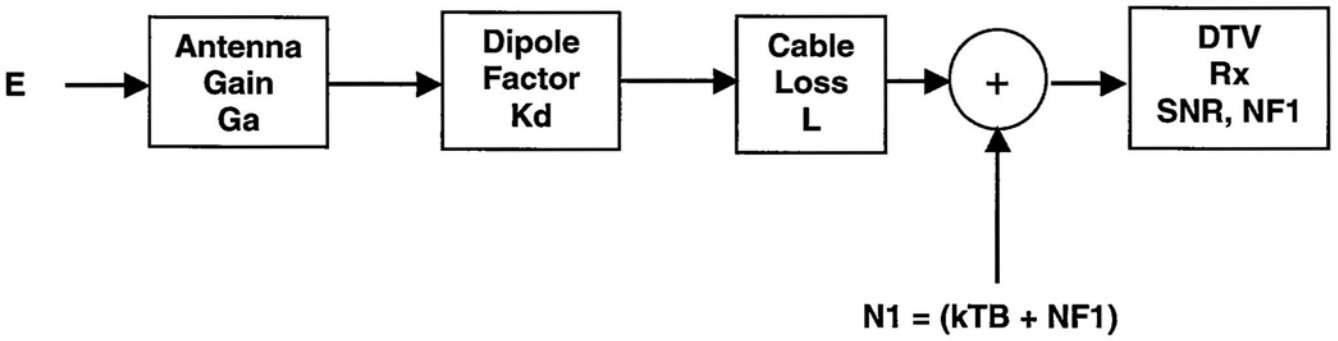

$$E\ (\text{dBuV/m}) = (kTB + NF1) + SNR + L + Kd - Ga$$

$$40.8\ (\text{dBuV/m}) = -106 + 7 + 15 + 4 + 130.8 - 10$$

Figure 1 Block diagram of typical FCC receive site

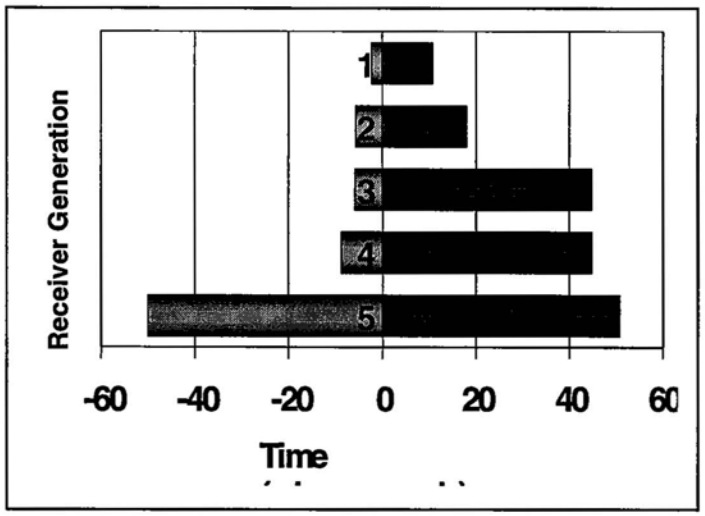

Figure 2a Equalizer delay improvement with generations

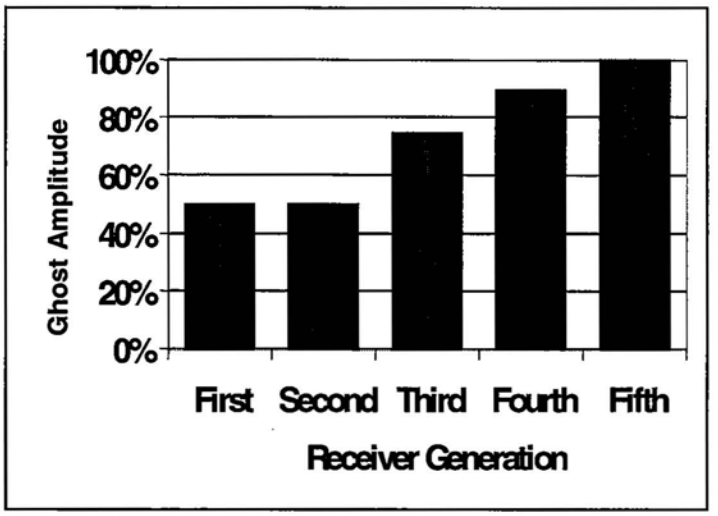

Figure 2b Equalizer amplitude improvement with generations

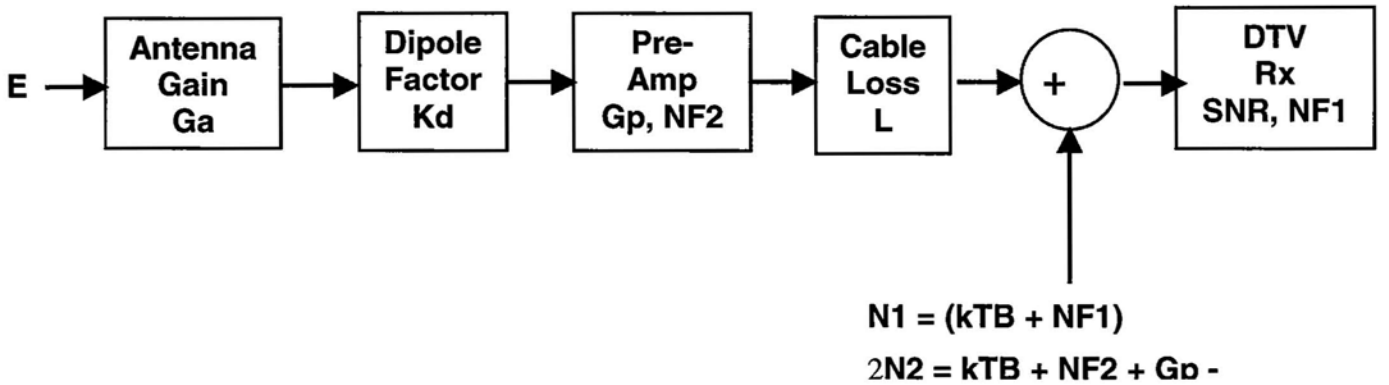

$$E(dBuV/m) = 10*Log[10^{0.1*(kTB+NF1)} + 10^{0.1*(kTB+NF2+Gp-L)}] + SNR + L - Gp + Kd - Ga$$

Figure 3 Block diagram of typical FCC receive site with added preamplifier

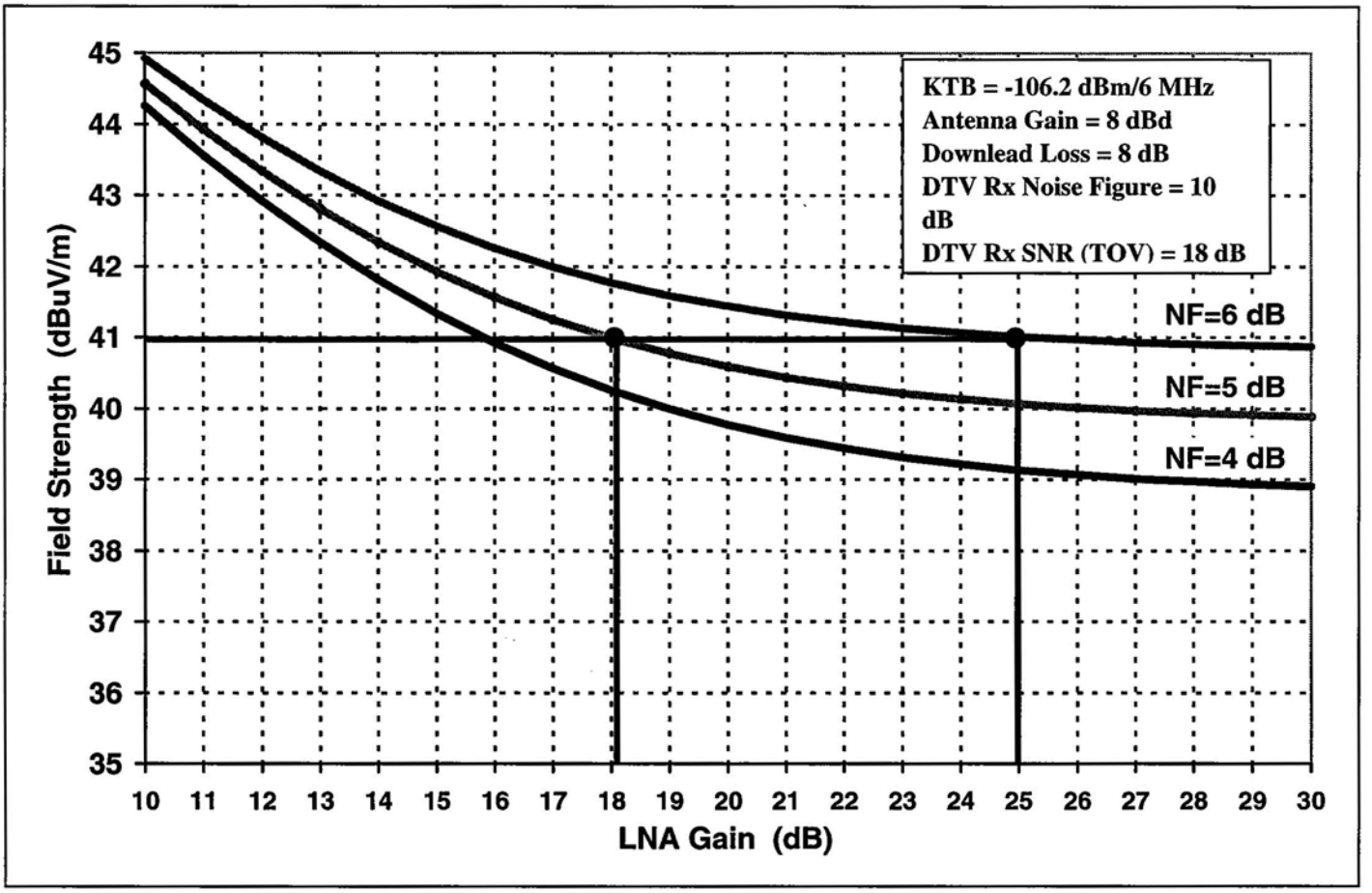

Figure 4 Field strength curves versus LNA gain for various noise figures

Exhibit A

Qualifications of the Firm
Meintel, Sgrignoli, & Wallace

William Meintel

Mr. Meintel holds a degree in Electrical Engineering and has 36 years experience in the communications field. After graduation, he was employed by the Federal Communications Commission, first as a field engineer and then in the Mass Media Bureau's Policy and Rules Division. While in Policy and Rules, he served as the division's computer expert and directed the development of several major computer modeling projects related to spectrum utilization and planning.

He entered private practice in 1989, and has been heavily involved in technical consulting, computer modeling and spectrum planning for the broadcast industry. In April 2005, Mr. Meintel merged his consulting practice into the firm Meintel, Sgrignoli, & Wallace.

Mr. Meintel co-authored a report for the NAB on spectrum requirements for Digital Audio Broadcasting (DAB), created a plan for independent television broadcasting for Romania and has been extensively involved in spectrum planning for digital television (DTV) in both the US and internationally.

Mr. Meintel wrote the coverage and interference analysis software utilized to develop the DTV Table Of Allotments and is well versed in the application of Longley-Rice and other propagation models. Mr. Meintel also wrote the software for the FCC's processing of DTV applications utilizing OET-69. He is a member of IEEE and Tau Beta Pi.

Gary Sgrignoli:

Gary Sgrignoli is a principal engineer and founder of Meintel, Sgrignoli, & Wallace. Mr. Sgrignoli received his MSEE from the University of Illinois in 1977. He was a Principal Engineer and Consulting Engineer at Zenith Electronics Corporation from 1977 till February 2004, when he left for private practice.

Mr. Sgrignoli has worked in the research, development, and design area on television "ghost" canceling, cable TV scrambling, and cable TV two-way data systems before turning to digital television transmission systems. Since 1991, he has been extensively involved in the 8-VSB transmission system design, its prototype implementation, and lab and field tests with Zenith and the Grand Alliance.

He holds 35 U.S. patents, including some that are related to digital television transmission and the 8-VSB transmission system. Mr. Sgrignoli is a recipient of the IEEE Matti S. Suikloa award presented by the IEEE Broadcast Technology Society.

He was involved with the DTV Station Project in Washington DC, helping to develop DTV RF test plans. He has also been involved with numerous television broadcast stations around the country, training them for DTV field testing and data analysis, and participated in numerous DTV over-the-air demonstrations with the Grand Alliance and the ATSC, both in the U.S. and abroad. In addition to publishing technical papers and giving presentations at various conferences, he has given many of his VSB transmission system tutorials around the country. He is a member of IEEE.

Dennis Wallace:

Dennis Wallace has an extensive background in Digital Television Systems. Mr. Wallace managed all the Laboratory RF Testing of the Grand Alliance ATSC HDTV System, having served as the RF Systems Engineer at the Advanced Television Test Center (ATTC). He managed test plans, configurations, and operations for Grand Alliance Testing and several Datacasting Systems. Prior to joining ATTC, he held positions in Field Operations Engineering, Applications Engineering, and was Product Manager for two Television transmitter manufacturers.

In July 1997, Dennis founded Wallace & Associates a broadcast engineering and consulting firm specializing in Digital Television, RF Propagation Measurements, Spectrum Policy issues, and Technical Consulting. His clients include major broadcast groups, The DTV Station Project, ATTC, Trade Associations, and both Professional and Consumer Electronics Manufacturers. In April of 2005 Wallace & Associates was merged into the firm of Meintel, Sgrignoli, & Wallace.

He has worked on the Broadcast side of the fence, as well, holding Chief Engineer and Operations Manager, positions with both Radio and Television Stations.

In 1999, Mr. Wallace was awarded the prestigious Matti S. Suikola award by the IEEE Broadcast Technology Society.

Mr. Wallace is a Certified Broadcast Television Engineer by the Society of Broadcast Engineers. He is also a member of the IEEE Broadcast Technology Society, SMPTE, an Associate member of the Federal Communications Bar Association, and is active on several industry standards committees and the ATSC.

ATTACHMENT 2

Measured Performance Parameters for Receive Antennas used in DTV Reception

Kerry W. Cozad
Dielectric Communications
Raymond, Maine

ABSTRACT

As more terrestrial-based off-air DTV programming becomes available, broadcast engineers are being asked to assist viewers in optimizing their receiving system. A typical receiving system would include a DTV receiver and display, downlead transmission line and a receiving antenna. The component with the most variability will be the receive antenna (type, orientation, mounting configuration, etc.). Utilizing input from broadcast engineers, this paper presents results from a study of typical receive antennas available to consumers. Performance parameters such as radiation patterns, polarization response and VSWR will be investigated. The objective of the investigation is to provide engineers with more detailed information regarding the in-home conditions viewers may be facing when trying to optimize off-air DTV reception.

BACKGROUND

Over-the-air TV reception concerns are as old as TV transmissions. Rabbit ears, bow-ties, loops, log periodics, etc. are familiar phrases for antenna types used for receiving TV signals at the homes of viewers. Because of the "graceful" degradation in the quality of received NTSC signals, coat hangers, aluminum foil and standing on one foot in a corner of the room have also been techniques for improving the quality of signal reception. With the introduction of cable TV and remote controls for the primary TV sets in a household, the latter techniques are typically unacceptable to the viewer as they require multiple attempts at adjustments for best picture and then when you change the channel, the process must be repeated. "Couchpotato-itis" has had a significant impact on the viewing habits of American consumers.

Since the first DTV receiving sets purchased for home use will most likely be replacements for the primary TV set now hooked up to cable through which there is presently limited access to retransmission of over-the-air digital programming, receive antenna usage is expected to increase.

Combining the consumer desire for simplicity in viewing (couchpotato-itis) and the rapid deterioration of DTV signal quality when signal margins are low, the reliability of reception when using an antenna system must be as high as possible.

PLANNING FACTORS

One method of attempting to assist in the design of reliable receiving systems is to provide accurate information that can be used by engineers to design these systems.

Receiver Planning Factors Used by PS/WP3

Planning Factors	Low VHF	High VHF	UHF
Antenna Impedance (ohms)	75	75	75
Bandwidth (MHz)	6	6	6
Thermal noise (dBm)	-106.2	-106.2	-106.2
Noise Figure (dB)	10	10	10
Frequency (MHz)	69	194	615
Antenna Factor (dBm/dBμ)	-111.7	-120.7	-130.7
Line loss (dB)	1	2	4
Antenna Gain (dB)	4	6	10
Antenna F/B ratio (dB)	10	12	14

Table 1

Table 1 is from the ACATS PS/WP3 Document 296 and is an example of the types of information needed to evaluate and design transmission/reception systems. Since the initial publishing of this table, several concerns have arisen regarding how "typical" some of these values are in commercially available products. Specifically, the receiver noise figure and antenna gain under real life conditions. We also know that multipath will impact the signal-to-noise (SNR) level at the receiver and the antenna F/B ratio may improve the rejection of multipath signals that arrive at the antenna from directions other than the primary transmitter site. One purpose for this investigation is to identify these key planning factors dependent on the receiving antenna and document measured performance of several "typical" antenna types for comparison to the performance "standards" presently being used. For real life situations, the ideal or best case conditions are not typical. The same can be said

for worst case conditions. Therefore, to be able to respond to viewer concerns regarding reception issues, it is necessary for the broadcast engineer to be aware of the range of performance possible for various conditions.

GOALS

A primary goal for this investigation was to document the actual performance of typical consumer available receive antenna products for comparison to the planning factors now being used. Also, based on that comparison and any additional information that may be acquired during the testing, identify possible areas of improvement in the design or in home set up of these antennas.

DESCRIPTION OF TESTING PROTOCOL

Two methods of testing and evaluation were determined to be useful in the documentation phase: full scale range measurements and computer modeling.

For the range tests, it was desirable to use standard procedures that would maintain consistency between the measurements and data/specification sheets supplied with the sample antennas by the manufacturer. The Consumer Electronics Association Standard CEA-774-A was used for identifying the performance parameters and the IEEE Standard Test Procedures for Antennas 149-1979 was used for setting up the measurement range facility. A photo of the range layout is shown in Figure 1.

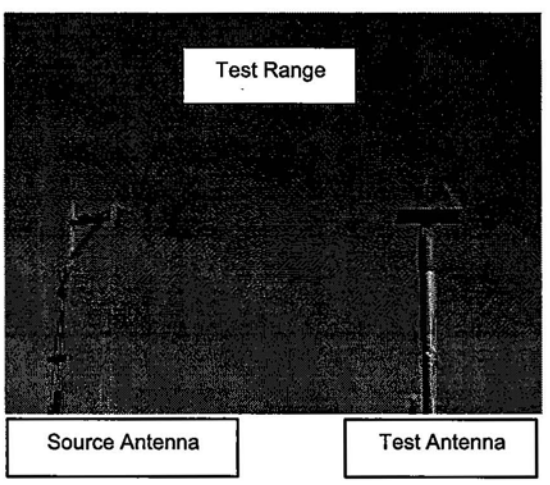

Figure 1

The outdoor far field range consisted of elevated platforms to support the source antenna and the antenna under test. The platforms were approximately 20 feet above ground level and located to minimize the effects of other objects near the range. The source antenna was a corner reflector with a dipole feed. A network analyzer was used as a signal source and receiver. A standard dipole was used to calibrate the range and then a calibrated half-wave dipole for each channel was used to measure the antenna gains by comparison. The network analyzer was also used to measure the input impedance of the antenna including any jumper cable that came with the antenna as a standard component.

Additionally, computer modeling was performed to compare results and determine the feasibility of using software analysis to simulate changes and determine improvements in the antenna designs. SuperNEC 2.7 was used for the computer modeling. SuperNEC 2.7 is a hybrid Method of Moment /Unified Theory of Diffraction antenna analysis program provided by Poynting Software (Pty) Ltd It is based on the Numerical Electromagnetics Code programs (NEC2) developed by Lawrence Livermore Labs in 1982. The program allows for inputting 2-D and 3-D models for simulation of electromagnetic characteristics such as radiation patterns, current flow, voltage levels and gain calculations.

The primary performance parameters to be tested were:

Antenna Principal Plane Patterns
- Azimuth Pattern
- Elevation Pattern

Polarization Response
- Horizontal
- Vertical

Frequency Response
- Variations within design band
- Response out of design band

Directivity

Gain

PRODUCTS TESTED

The receive antenna types to be tested were chosen based on availability to the consumer, specific design for the band of interest and to provide comparisons between typical types from different manufacturers. They were divided into two types based on whether they would be mounted inside or outside the home.

"Set Top" (indoor)

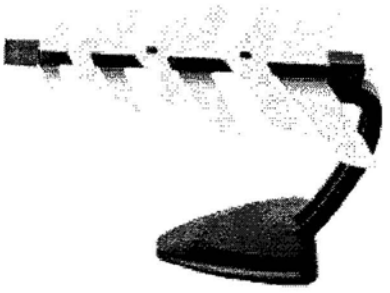

Zenith Silver Sensor

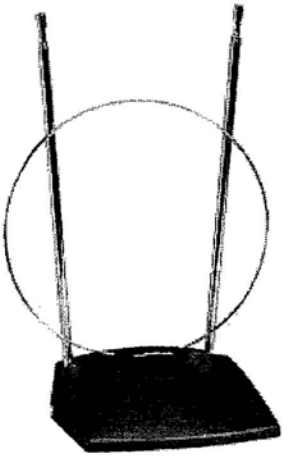

Radio Shack 15-1864 Loop

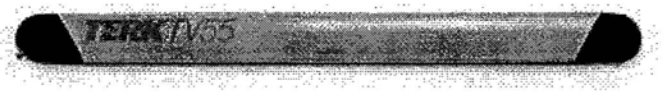

Terk Antenna Pro

Attic or Outdoor

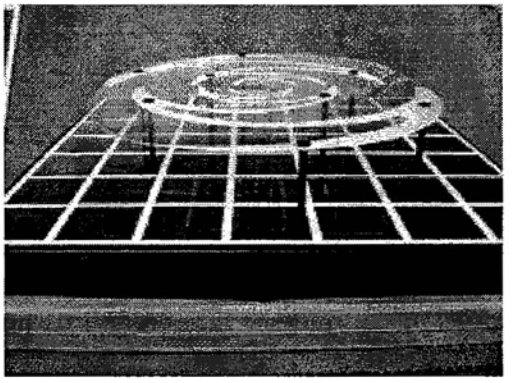

Winegard SS-1000

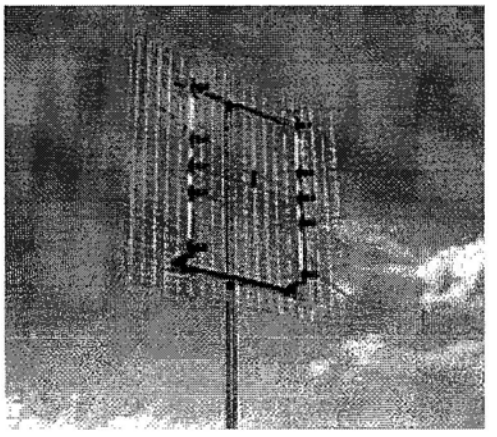

Channel Master 4228

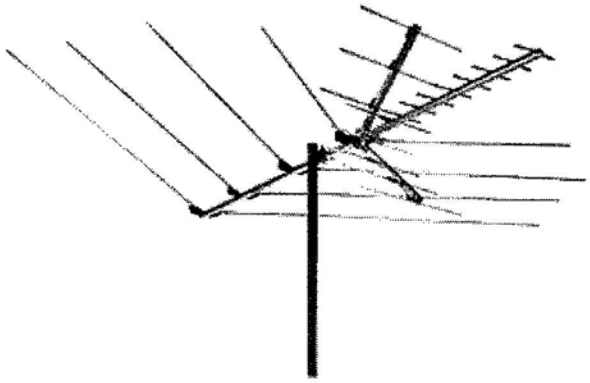

RCA ANT3020

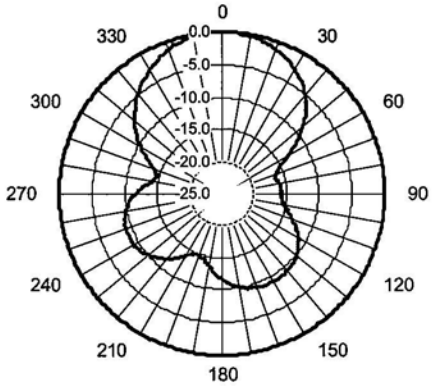

Silver Sensor: Azimuth

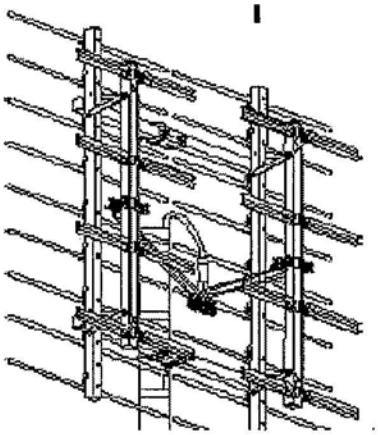

Winegard PR-8800

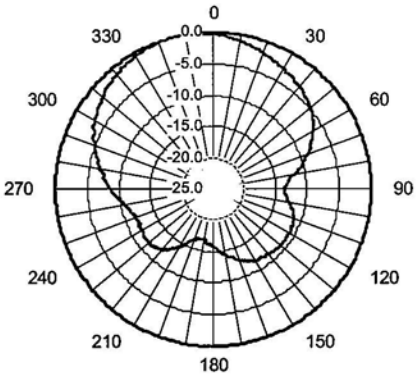

Silver Sensor: Elevation

MEASURED RESULTS

The amount of measurement data acquired during the testing of these antennas prohibits presentation of all the data in this paper. If the reader is interested in the specific data, please contact the author at the address included at the end of the paper. Below are samples of the data measured on two of the typical indoor antenna types. A summary of parameters for more samples of the antennas is included in a later section of this paper.

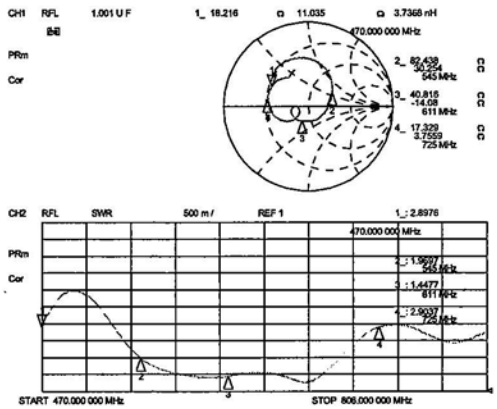

Silver Sensor VSWR

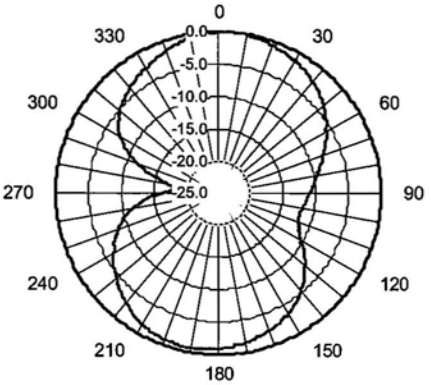

Radio Shack 1864: Azimuth

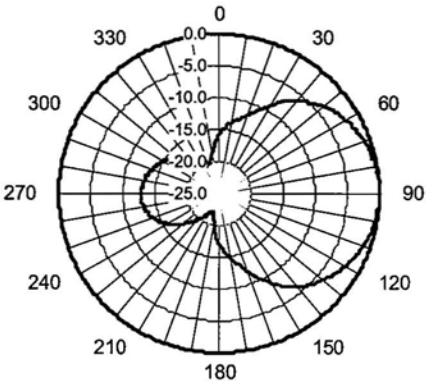

Winegard SquareShooter: Elevation

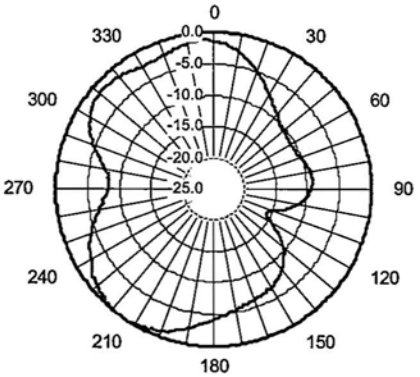

Radio Shack 1864: Elevation

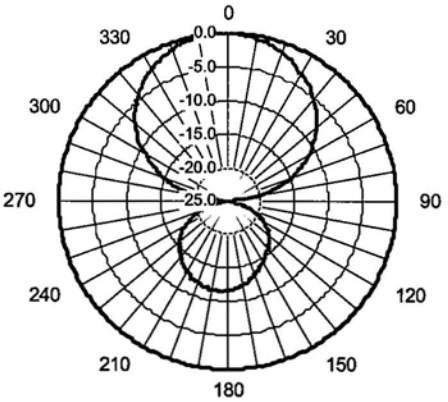

Winegard SquareShooter: Azimuth

The previous measurements were all taken in the horizontal polarization mode. Data was also taken in the vertical polarization and the gains were compared to determine the effectiveness of the standard antenna to receive cross-polarized signals. This information can be used to study the use of transmitting cross-polarized signals to minimize interference or the reception of multipath echoes. A sample comparison is shown in Table 2.

Average V-Pol/H-Pol Ratios

Zenith	-20 dB
Channel Master	-19 dB
Radio Shack 1864	-5 dB

Table 2

OBSERVATIONS FROM MEASURED DATA

There were two basic antenna designs tested: the loop indoor antenna and a linear array of elements. The loop antenna was the less directional design and therefore exhibited lower gains. It also showed the greater sensitivity to receiving polarizations other than horizontal which could be a benefit for broadcasters that choose to transmit a vertically polarized signal along with the horizontally polarized signal to improve close in coverage and penetration through buildings but would not be a benefit in minimizing the reception of multipath. The higher gain receive antennas that would typically be used for locations at some distance from the transmitter have more defined pattern shapes with a specific directionality in the direction of the array. This provides for the ability to "aim" the antenna for

maximum signal and minimize reception of multipath reflections for other directions. Any benefit that might be provided by transmitting a vertically polarized signal was not apparent.

The one exception to the general antenna types described above was the Winegard SquareShooter. Its design is shown in the photo earlier and is a log periodic style design for broadband performance. It was thought that the vertically polarized signal response would be different for this design relative to the linear array antennas. It was more sensitive to vertical polarization but the levels were still more than –10dB those for horizontal polarization.

COMPUTER MODELS

Several of the antennas were also modeled using SuperNec 2.7. The primary purpose of this exercise was to compare calculated to measured data so that any investigations into improved designs for the antennas could be accomplished quickly in the lab versus having to build a physical prototype of each antenna for testing on the model range. Examples of this data are presented below.

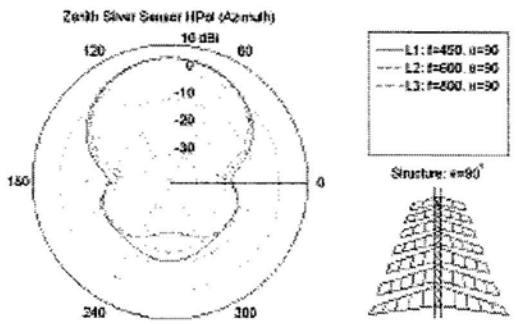

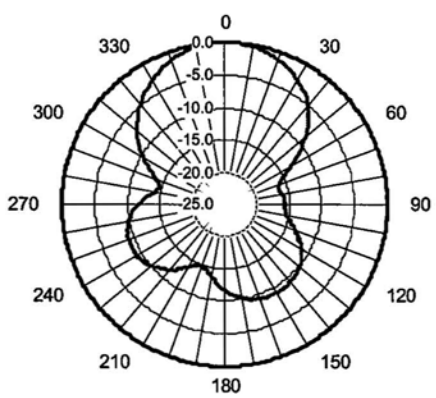

Zenith Silver Sensor
Measured H-Pol Azimuth Pattern

GAIN COMPARISONS

A graph showing a comparison of calculated gain performance for the antennas relative to channel is included on the next page. One of the more interesting questions that arose during this investigation was the performance of UHF specific antennas at VHF channels 7-13. Since most DTV channels presently in operation are UHF, concerns about moving back to the present High Band VHF NTSC channel later for DTV transmission and the impact on over-the-air viewers that were using UHF only receive antennas could be a critical decision point. Based on this data, small, compact designs that would be used indoors did not perform as well as the outdoor designs that used two-dimensional arrays of dipole elements. It is believed that the feed systems for these larger arrays provided additional area for current flow at the lower frequencies and therefore improved the received signal levels for channels 7-13.

Also noted is that only the larger, outdoor antenna designs will meet the 10 dB gain parameter for UHF unless an amplifier is used with the antenna. This certainly brings at least one more factor into the equation relative to the quality of the amplifier system used. That concern was not part of this investigation.

SUMMARY

Only a small sample of the measurements made is presented in this paper. Measured gains will be presented at the NAB Engineering Conference, as they were not available at the time of writing of this paper, as well as additional pattern analysis data.

It is clear that accurate measured data can provide significant insights for the broadcast engineer when responding to reception concerns by viewers. Knowledge of the effectiveness of antenna types relative to distance from the transmitting site (gain and directional characteristics), multipath rejection, and performance over multiple channel bands can be areas that will assist broadcast engineers in working with viewers to optimize reception. It is the hope of the author that the information previously presented at the 2004 IEEE Broadcast Symposium, and the information provided in this paper and at the 2005 NAB Engineering Conference will be helpful to broadcast engineers during the ongoing transition to digital television around the world.

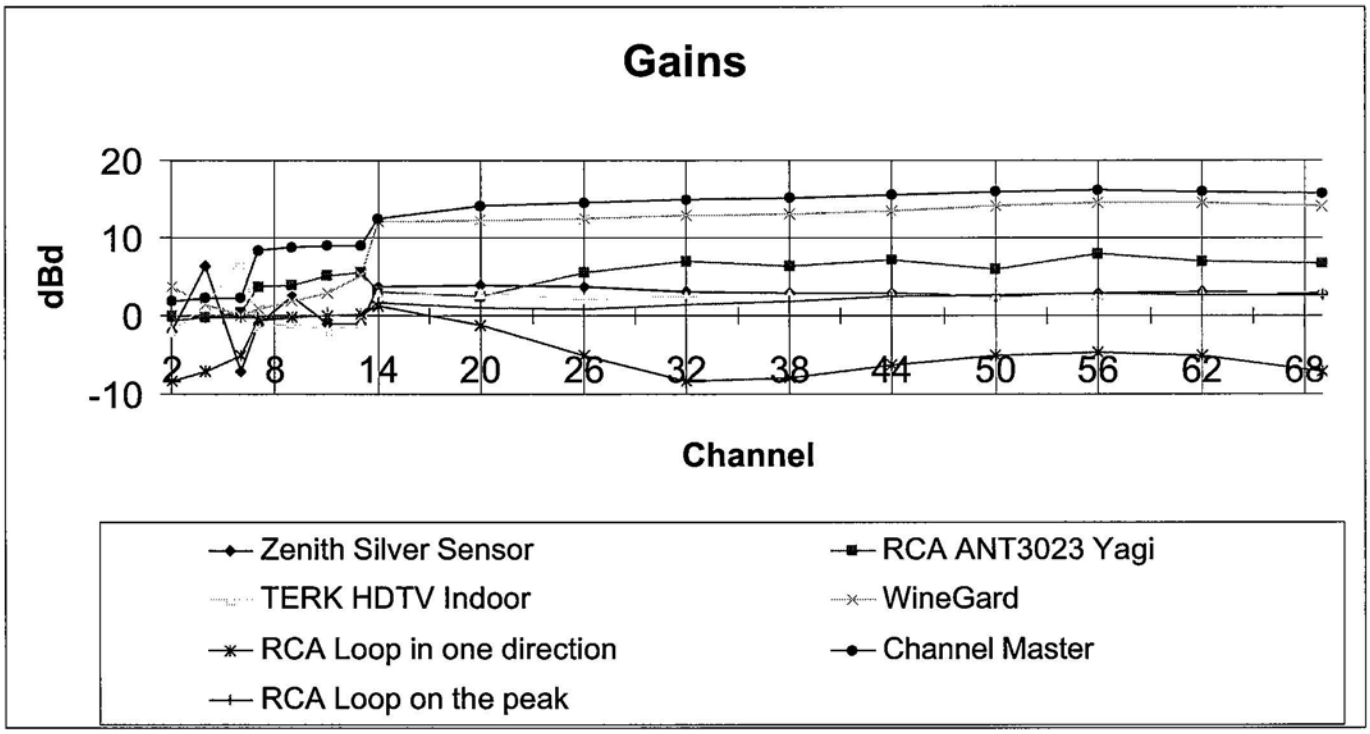

ACKNOWLEDGEMENTS

The author would like to thank Mr. Andy Bater of Tribune Broadcasting for his support of this work and providing most of the antennas used in the testing. Also, many thanks to the Broadcast engineering staff at Dielectric Communications for their assistance in developing the test range, performing the measurements and analysis of the data.

FOR ADDITIONAL INFORMATION

Please contact:

Kerry W. Cozad
Dielectric Communications
PO Box 949, 22 Tower Road
Raymond, ME 04071

(207) 655-8133
kerry.cozad@dielectric.spx.com

ATTACHMENT 3

Performance of 5th Generation 8-VSB Receivers

Tim Laud, Mark Aitken, Wayne Bretl, K. Y. Kwak

Abstract — *There has been a focused effort within the television broadcast industry to move DTV receiver technology "state-of-the-art" forward to better deal with the more difficult and complex receiving environments faced within the TV viewing environment. In this paper, we detail the approach taken which today provides the broadcast industry with a "breakthrough" 8-VSB receiver product that has "cleared the bar" of expected performance for the simple consumer-friendly reception of over-the-air digital television in most complex environments.*

There have been many field tests and studies performed since the adoption of the 8-VSB ATSC standard. Armed with a more complete understanding of the adverse environments where prior 8-VSB receivers fell short of providing acceptable reception, it became clear that an architecturally advanced approach was needed. Having new and advanced methods of analyzing captured RF signals, coupled with new-found capabilities of more accurately defining and applying such "real world" approximations in the realm of software simulation, led to an understanding of many modeled performance capabilities prior to hardware production. A variety of tools allowed the design team to depart from the generally accepted implementations of the past, and to deal in new ways with the infinitely complex array of variable ghost delays and amplitudes required to meet the needs of broadcasters and consumer electronics manufacturers alike. Affirming knowledge about the need to deal with known interferences, resulting from an increasingly densely packed RF broadcast television spectrum is also highlighted.

Field evaluation data is presented to confirm the conclusions. Providing correlation of results with laboratory simulations and tests with those "real world" conditions in various field trials conducted by multiple parties enables this technology to achieve quick acceptance in the marketplace.[1]

Index Terms — VSB, Digital Broadcast Television, DTV Receivers

I. Introduction

EACH generation of 8-VSB demodulator has shown a performance improvement. A new generation has appeared approximately every two years since the US adoption of a digital TV standard. This paper documents some of those improvements with emphasis on the most recent step from 4th to 5th generation. Lab results are presented along with simulated and actual field results.

II. Fifth Generation Advances

The performance improvements of the 5th generation receiver enable reception using simple antennas such as bow ties, loops and rabbit ears. Sensitivity to antenna positioning with respect to the propagated signal will now be very low. The need to adjust the antenna when changing channels will be almost non-existent, providing viewers with the main criterion for "ease of reception".

The new equalizer architecture and algorithm enhance convergence under combinations of complex ghosts, severe ghosts and noise. Also, the equalizer architecture now supports longer-delayed ghosts and has a symmetric capability for pre and post ghosts.

The ghost cancellation circuit has several features that contribute to the enhanced performance. Initialization is based on an accurate channel impulse response estimate rather than a fixed starting condition. Dynamic ghost tracking then uses an LMS algorithm to update equalizer taps. A zero-delay trellis decoder improves the accuracy of the update estimates and improves the Doppler (rate of change) performance. Techniques for reduced noise enhancement improve accuracy.

III. Equalizer Improvements of Various Generations

From the beginning of digital television development, it was recognized that multipath was an issue that would need to be addressed, especially for indoor reception. However, since automatic ghost canceling of the complexity required for digital reception had not been previously implemented in any analog product, there was little data on the severity and nature of the problem.

The very first generation of 8-VSB demodulators marketed included equalizers that assumed significant ghosts were within 10 microseconds of the main signal and their amplitude was no greater than half the main. Field measurements quickly showed this to be true for less than 70% of a typical TV coverage area.

A second generation design was introduced early on and used for the greatest number of field tests. Hence, most of the reception studies are based on this level of performance.

[1] Tim Laud is with Zenith Electronics Corp., Lincolnshire, IL 60069 USA (e-mail: tim.laud@zenith.com)

Mark Aitken is with the Sinclair Broadcast Group, Hunt Valley, MD 21030 USA (e-mail: maitken@sbgnet.com)

Wayne Bretl is with Zenith Electronics Corp., Lincolnshire, IL 60069 USA (e-mail: wayne.bretl@zenith.com)

K. Y. Kwak is with LG Electronics, Seoul, Korea (e-mail: kkwak@lge.com)

Contributed Paper
Manuscript received September 15, 2004

0098 3063/04/$20.00 © 2004 IEEE

Subsequent generations of demodulators were designed with longer equalizers. (See Fig. 1.) New iterations handled more ghost scenarios than the previous implementations. Each generation essentially doubled the post ghost capability, pre-ghost capability, or both. Analysis of signals at difficult sites has shown that the earlier assumption that the strongest signal occurs among the first arrivals is often incorrect. Therefore, the 5th generation has added the capability to handle 50 microsecond pre-ghosts or post-ghosts.

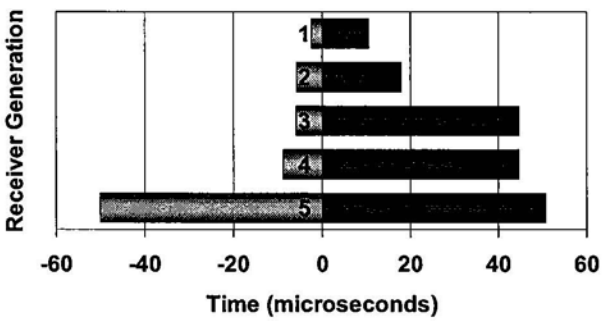

Fig. 1. Length of equalizer capability for each generation of 8-VSB receiver.

In addition to ghost delay lengths, it was recognized that improvements in ghost amplitude handling were necessary. While the original assumption that the first signal arrival from the transmitter would be the strongest seemed reasonable, it is a poor fit to the scenario of indoor and "concrete canyon" reception. In these cases, the direct path from the transmitter is frequently blocked and the initial wave may be much smaller than the reflections. To address this, each generation improved the algorithm for ghost cancellation. This allowed reception in an increasing number of locations. Whereas the early equalizers could handle only a 50% amplitude ghost, the latest implementations can handle a reasonable ensemble of 100% ghosts. (See Fig. 2.)

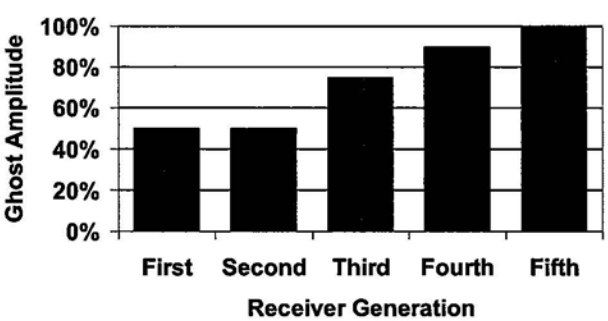

Fig. 2. Maximum ghost amplitude handling for each generation of 8-VSB receiver.

IV. Laboratory Tests

From Figs. 1 and 2, it is easy to see that the new equalizer architecture of the 5th generation is a big step forward. To characterize this improvement in performance, each generation of hardware has been tested in the laboratory against several ghost ensembles. Each ensemble typically has been composed of 6 signals (a limitation of the test apparatus) of varying amplitudes and delays. The most common ensembles used in recent tests are listed in Table 1 [1]. Ghost complexity generally increases from the top to the bottom of the table.

ATTC D was defined early in the U.S. DTV trials. The ghosts are relatively simple and low energy.

Brazil A is a minor variation on ATTC D.

Brazil B includes a few strong ghosts at moderate delays.

Brazil C and D represent indoor scenarios of very strong, close-in ghosts. Brazil D is primarily pre-ghosts.

Brazil E represents an unusual but possible extreme case in a single frequency network. Three signals of equal strengths are separated by one microsecond.

The CRC ensembles consist of a number of strong and moderate ghosts of short delay plus one of long delay.

The results of each generation's performance against these ghost scenarios are summarized in Table 1. (First generation hardware is no longer maintained or tested since its marginal performance is well documented.) The 5th generation chip exhibits a clear breakthrough in laboratory ghost performance.

	2nd	3rd	4th	5th Gen
ATTC D	Pass	Pass	Pass	Pass
Brazil A	Pass	Pass	Pass	Pass
Brazil B	Fail	Fail	Fail	Pass
Brazil C	Fail	Fail	Pass	Pass
Brazil D	Fail	Fail	Fail	Pass
Brazil E	Fail	Fail	Fail	Pass
CRC 3	Fail	Fail	Fail	Pass
CRC 4	Fail	Fail	Fail	Pass

Table 1. Ensembles used to measure equalizer performance have been collected from international test labs.

A better understanding of real world performance requires field testing. However, the variations in field conditions from time to time make it impossible to repeat a measurement, so that field test must use a large number of measurements and analyze the results statistically. A few years ago, methods of recording and playing back the RF signal found in the field were developed. This allows the repeated and comparative testing of demodulator designs. During field tests conducted by MSTV (Association for Maximum Service Television) in Washington DC and New York City, RF captures were taken at difficult locations. Fifty of these captures are called out in the ATSC (Advanced Television Systems Committee) Recommended Practice A/74: Receiver Performance Guidelines [2].

The 4th and 5th generation receivers were tested against these RF captures. Note that the captures may have multiple impairments, e.g., noise and/or interference, in addition to

ghosting. The results are shown in Fig. 3. The number of failures was cut by a factor of 5. Keeping in mind the known extreme difficult nature of these captures, with this degree of improvement, field performance enhancement should be quite dramatic. While these RF captures can provide an understanding of performance within the specific channel bandwidth captured, interference and noise within the adjacent spectrum, must be factored in to adequately understand other "real world" performance parameters.

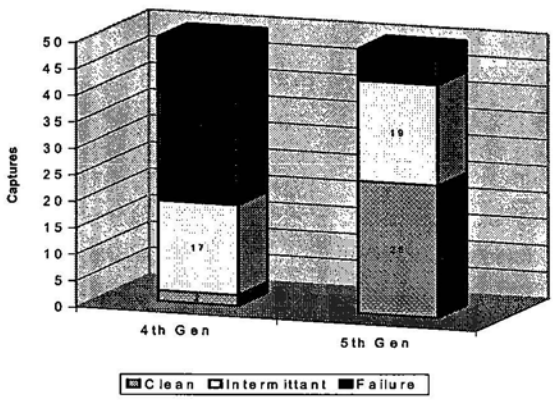

Fig. 3. Performance of 4th and 5th generation receivers against RF captures.

V. Field Tests

At some point in the reiterative design/review/improvement process, it is necessary to assess "real world" performance. It is not possible to assign totally objective criteria to define the many variables associated with field test sites. However, statistical analysis of reception success and the analysis of captured spectrum data do allow an understanding of varying degrees of difficulty. Well-documented sites and areas that have historically been "difficult" provide a good place to assess relative performance of generations of receiver technologies.

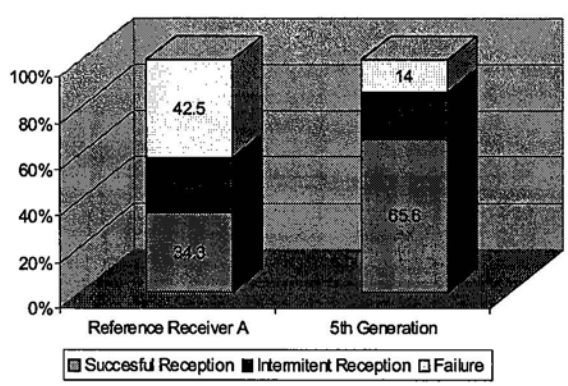

Fig. 4. Field Reception Results in Washington DC.

The 5th generation receiver was tested in Washington DC during the summer of 2003 by MSTV at numerous known difficult locations. Many of these locations have been identified since the second generation receivers were field tested. A reference receiver of understood and documented performance was tested simultaneously to provide a ready "benchmark". This provides a good measure against the recent state of the art. In Fig. 4, it can be seen that the number of reception failures was reduced by a factor of 3.

Similarly, independent tests were performed by the Communications Research Center in Canada during 2004. The results were presented at the SET conference in Brazil of August 2004 [3]. The improvement in reception vs. a reference receiver is shown in Fig. 5. Data shown here is for a single transmitter and a directional receiving antenna.

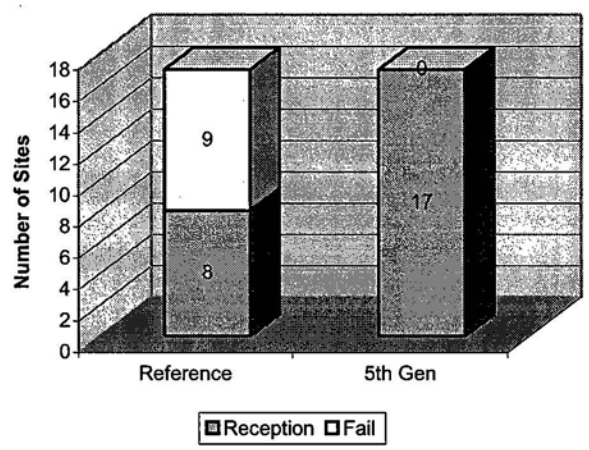

Fig. 5. Field Reception Results in Ottawa, Canada.

A structured series of tests in well-documented difficult environs in and around Baltimore was conducted in the Spring of 2004[2]. Based on the performance of earlier generations of products, many of these documented sites are challenging to earlier generations of receivers, and present an opportunity for side-by-side "real world" testing. All of the sites chosen had signal strength well above the minimum required by the receivers under test, so that the effects of ghosting and interference were dominant.

Earlier evaluation had also made note of some performance issues associated with adjacent channel interference, both first and second. (Channel 46DT is adjacent to Channel 45 NTSC and Channel 52DT is close to Channel 54 NTSC as shown in Fig. 6).

The test setup included a tunable band-pass-filter with moderate rejection characteristics (~35MHz bandwidth) that could be adjusted to identify possible effects of these adjacent (and other) sources of interference. While both 2nd and 4th generation receivers were positively influenced by use of the bandpass in a small number of locations, it was difficult to

[2] Tests were conducted by engineers from Sinclair Broadcast Group and Zenith Electronics Corp.

determine any significant impact on the performance of the 5th generation product. This improvement may be attributable to differences in RF tuner performance in addition to characteristics of the demodulator integrated circuits.

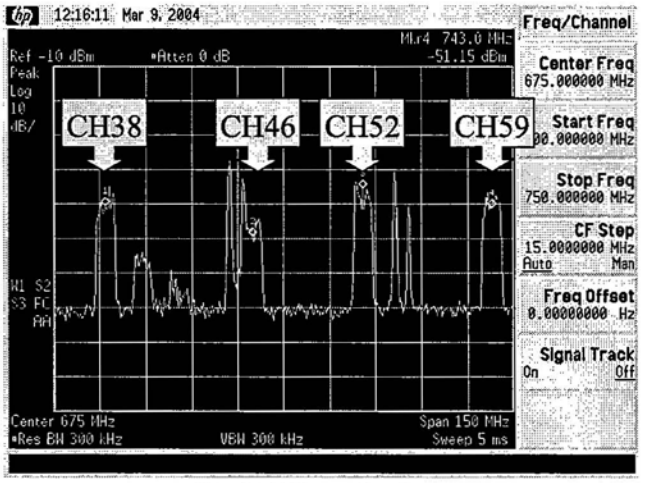

Fig. 6. Baltimore Spectrum

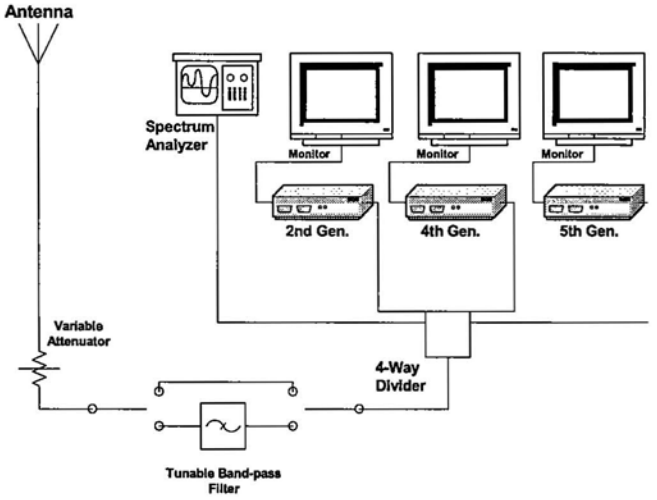

Fig. 7. Simplified Test System Diagram

Multiple sites were chosen, and a comparative test was conducted noting the received/displayed video performance as primary indicator. The system illustrated in Fig. 7 was used to provide simultaneous display of the receiving characteristics of three generations of receivers. Calibrated spectrum power and shape were recorded, showing amplitude/frequency variations. This setup allows study of the effects of various site-specific variables (such as antenna orientation/placement, traffic and path attenuation.) and resulting impact on reception. The following is a simplified version of the test procedure:

1. Arrive at selected location and set the receiving antenna/tripod at a fixed test position. (The location of the tripod was random to the extent that the vehicle could be parked legally and safely).
2. Connect the selected TV antenna (simple bowtie at 2m height) to the system as indicated in Fig. 7.
3. Orient the antenna for maximum integrated power on an available DTV broadcast. (In this case channel 38 with a center frequency of 617 MHz was used)
4. Record the reference values, and note presence (or lack) of video output from DTV receivers. Note site-specific variables and note impact on reception

Several antenna types were used at various locations, but a simple "bowtie" antenna was used for all of the comparative tests of "ease of receivability." This simple antenna provides a broad incidence of reception (mostly non-directional) at UHF frequencies, providing a means to assess the ability to receive multiple channels without a need to adjust receiving antenna pointing. This is important in the simple home receiving environment.

There was good correlation with results obtained in prior tests at the same locations with both the 2nd and 4th generation receiver products. This provided a way to gauge the real performance differences with the 5th generation product. The results in Fig. 8 indicate performance enhancements in the 5th generation product that closely match the expectations as a result of the previous promising laboratory and simulated environment tests.

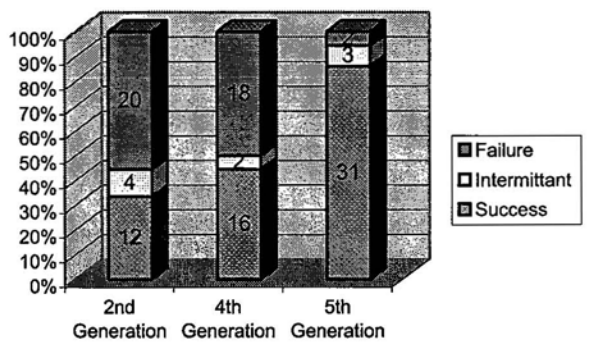

Fig. 8. Baltimore "Ease of Reception" Test Results

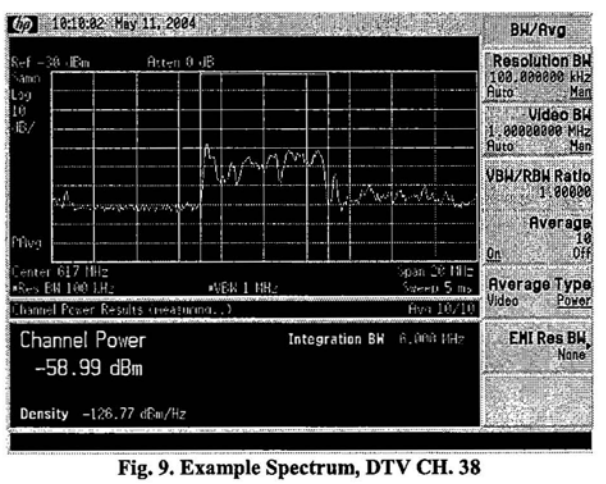

Fig. 9. Example Spectrum, DTV CH. 38

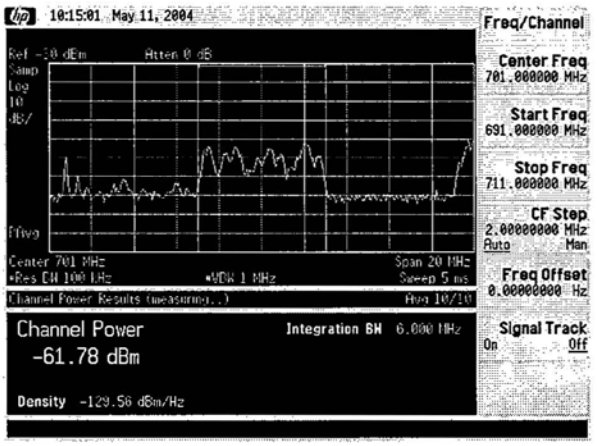

Fig. 10. Example Spectrum, DTV CH. 52

Even in some of the most difficult sites, with multipath very evident in the spectrum (Fig. 9 and Fig. 10), reception was possible with the 5th generation receiver.

VI. Future Enhancements

Improvements in receiver performance beyond fifth generation are still possible. Improvements are planned for equalizer convergence speed, particularly to address the portable environment. Adjacent channel interference can be addressed in two ways. Changes in tuner AGC methodology can address overload conditions experienced with the more densely packed broadcast spectrum. The effects on reception of digital stations can be reduced by operating them at full licensed power, especially when they are in a spectrum with powerful adjacent or nearly adjacent analog stations.

VII. Conclusion

Because of the need to free up spectrum for a variety of interests and uses, an increasing burden has been placed on all involved in the FCC mandated DTV transition. Because of the "all or nothing" nature of digital reception, digital TV must provide excellent reception even where analog reception is poor, in order to facilitate the transition for the large number of receivers that use over-the air reception. This is beyond the requirements originally proposed at the inception of digital television, but it is being met by 5th generation designs.

Development of the successive generations of demodulators has depended on a cooperative effort of broadcasters and receiver designers to better understand expectations, identify the real world problems associated with digital terrestrial transmission/reception and define test protocols that more fully represent that real world (for example the ATSC recommended practice A/74).

Proper matching of the application design efforts to the discovered realities of digital terrestrial reception has resulted in 5th generation hardware that clearly supports identified needs of the digital transition.

References

[1] Communications Research Centre Canada, "Results of the Laboratory Evaluation of Zenith 5th generation VSB Television Receiver for Terrestrial Broadcasting," http://www.crc.ca/en/html/crc/home/research/broadcast/rtnt , Appendix A, September 2003.

[2] Advanced Television Systems Committee, "ATSC Recommended Practice: Receiver Performance Guidelines," http://www.atsc.org/standards/practices.html, Annex A, June 2004.

[3] Communications Research Centre Canada, "Results of the Laboratory Evaluation of Zenith 5th generation VSB Television Receiver for Terrestrial Broadcasting," http://www.crc.ca/en/html/crc/home/research/broadcast/rtnt, September 2003.

Biographies

Timothy Laud (M'74) is a Senior Member of the Technical Staff for Zenith Electronics Corporation. Tim attended Purdue University where he received his BSEE in 1975 and MSEE in 1976. After a brief period at Motorola, Tim joined the Zenith R&D team in 1980. He has been involved in the development of VSB and E-VSB since their inceptions.

Mark A. Aitken is Dir. of Advanced Technology, Sinclair Broadcast Group. Educated at Springfield Technical Community College with continuing education in Eng. Mgmt. at Rensselaer Polytechnic Institute, he represents SBG within many industry related organizations including ATSC. Mr. Aitken is a member of AFCCE and IEEE, involved with advanced digital television systems design and implementation.

Wayne Bretl is a Principal Engineer in the R&D Department at Zenith Electronics. He received the BSEE from Illinois Institute of Technology in 1966, and joined Zenith in 1975. He holds over 15 patents in television technology and related areas. He is a member of IEEE, SMPTE, AES, and SID, and represents Zenith in ATSC and a number of professional and industry associations.

Kook Yeon Kwak has been developing technology and ASICs for VSB, QAM and COFDM as a research fellow in the DTV laboratory of LG Electronics since 1999. He joined LG Electronics in Korea in 1979. He received the B.S. degree in electronic engineering at National Seoul University in Korea in 1979, the M.S. degree in electrical engineering from KAIST in Korea in 1984, and the Ph.D. degree in electrical engineering from Polytechnic University in NY in 1995.