FCC PER CALL COMPENSATION (PCC)
QUARTERLY REPORTS – PROCESS CONTROL FLOWCHART

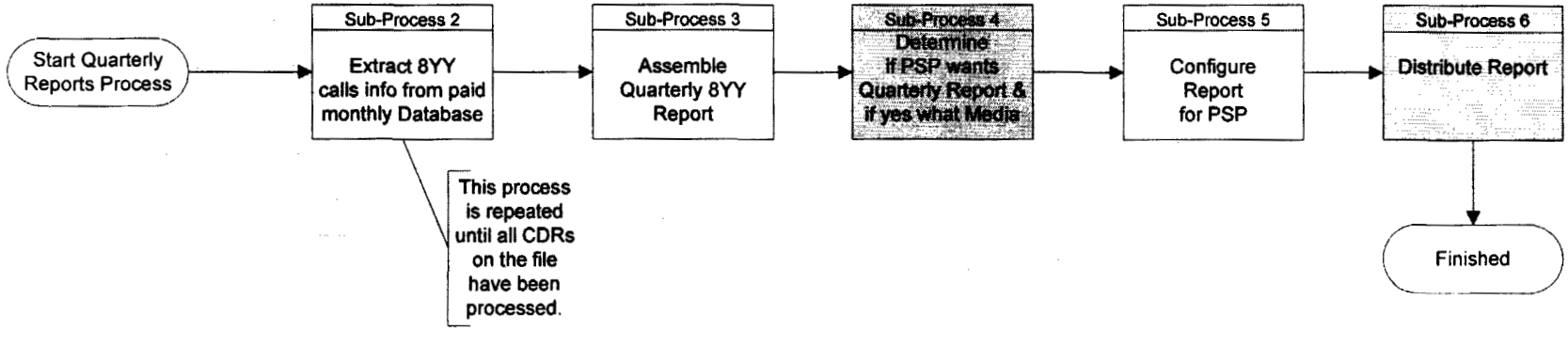

Sub-Process 2 – EXTRACT 8YY CALLS from PAID MONTHLY DATABASE

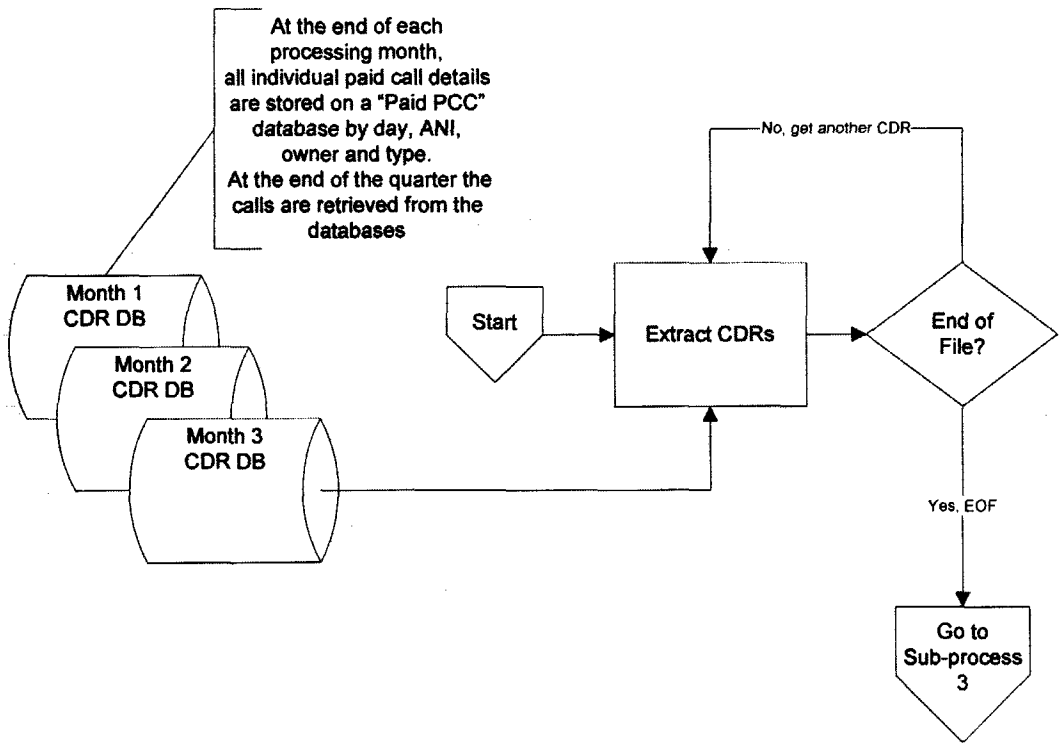

Sub-Process 3 - ASSEMBLE QUARTERLY 8YY REPORT

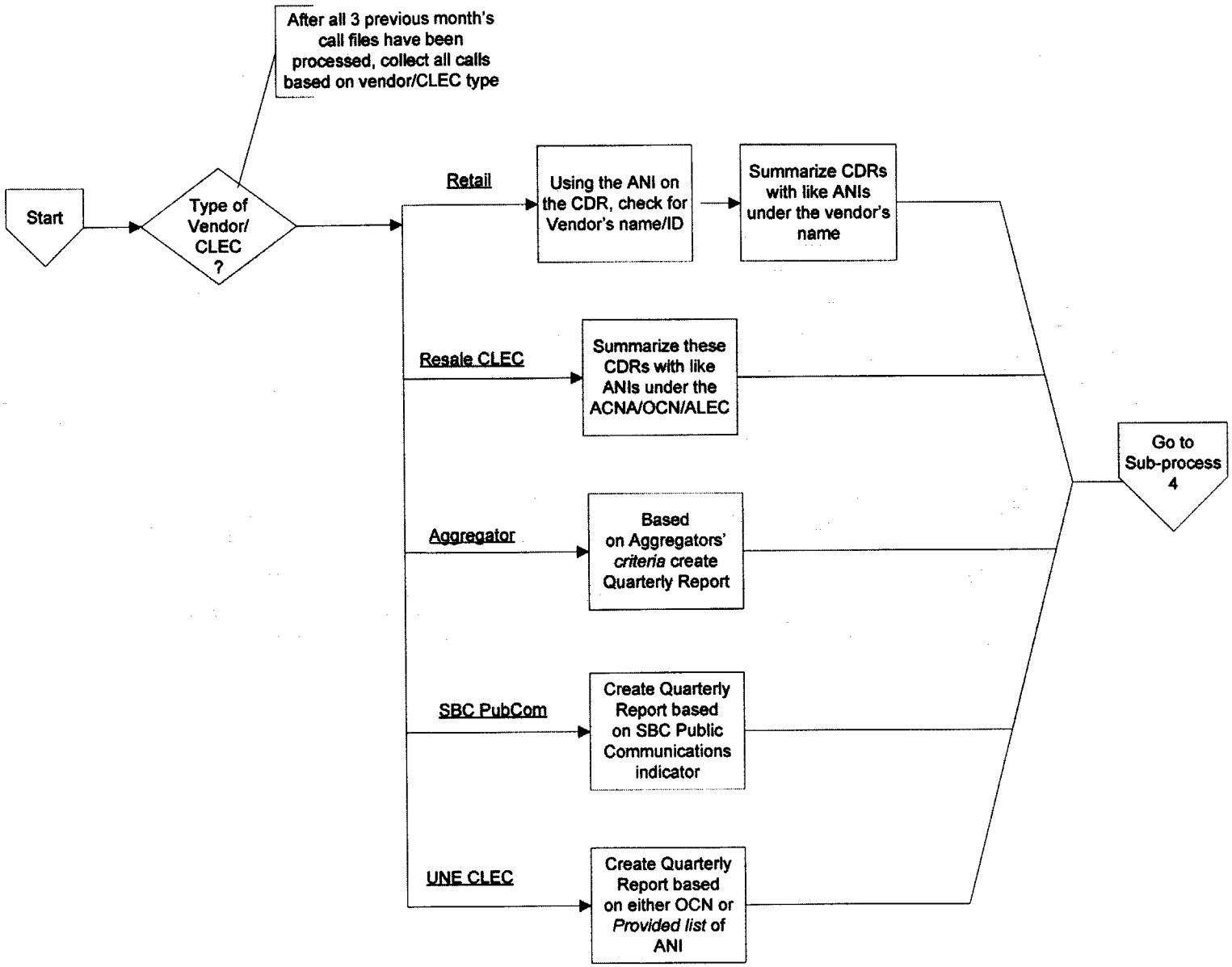

Sub-Process 4 - DETERMINE REPORT PREFERENCE

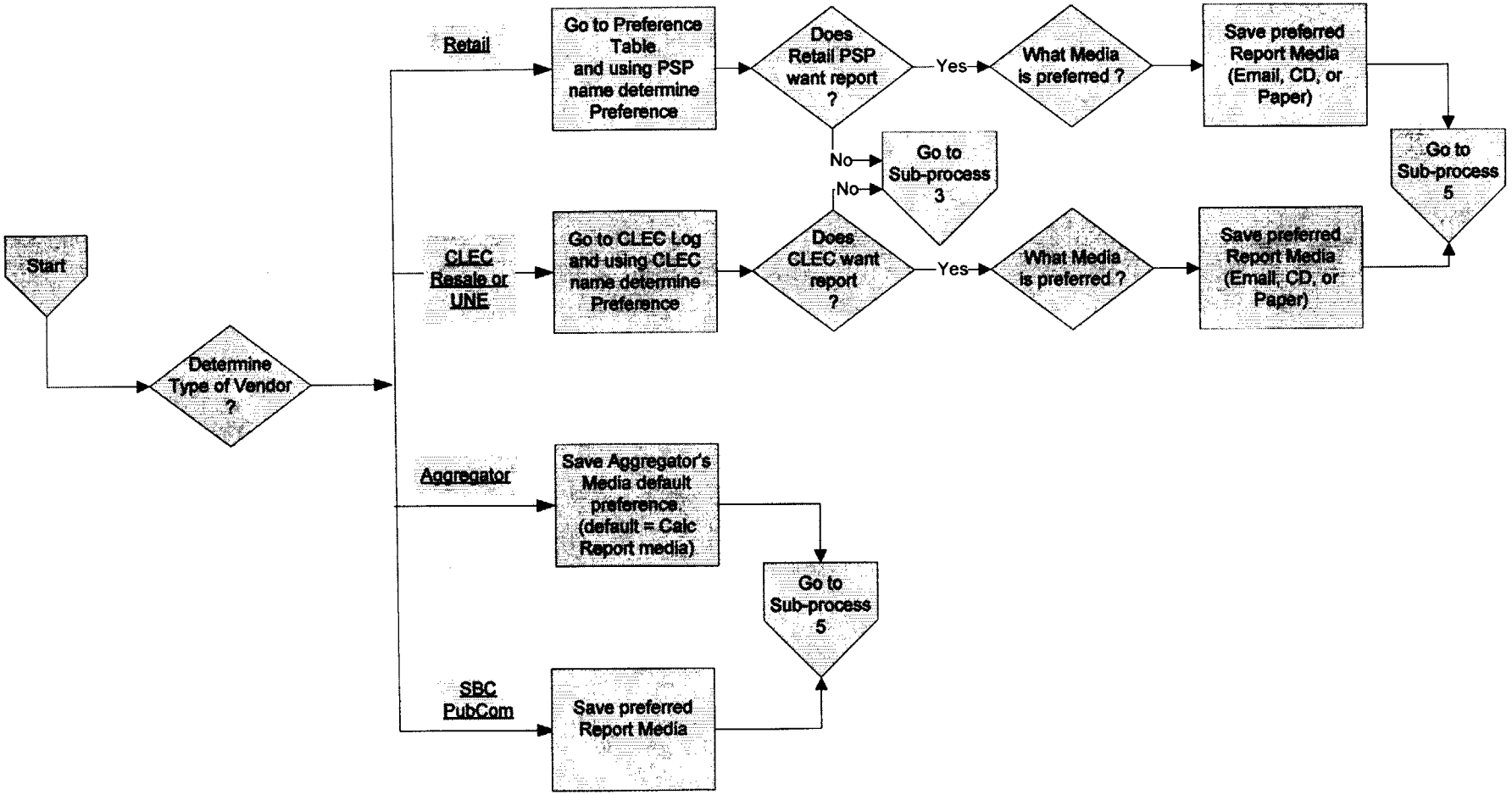

Sub-Process 5 - CONFIGURE REPORT for PSP

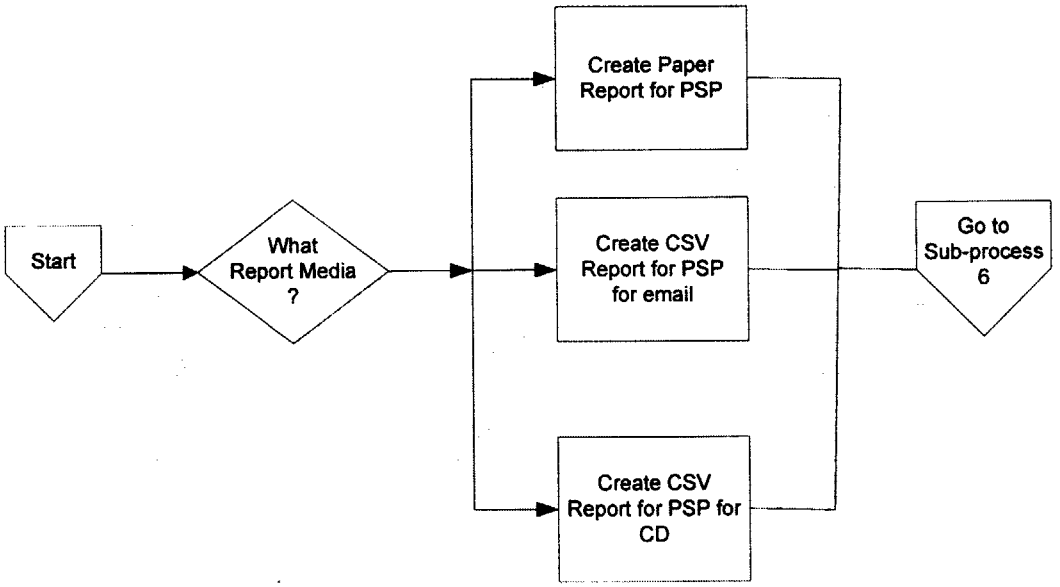
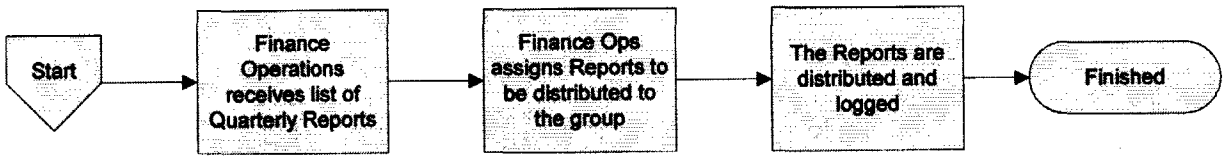
Sub-Process 6 - DISTRIBUTE REPORT