**Before the**
**Federal Communications Commission**
**Washington, DC 20554**

| | |
|---|---|
| In the Matter of<br><br>Developing a Unified Intercarrier Compensation Regime | CC Docket No. 01-92 |

# Reply Comments of the Intercarrier Compensation Forum


Gary M. Epstein
Richard P. Bress
Richard R. Cameron
Alexander Maltas
LATHAM & WATKINS LLP
555 Eleventh Street, N.W., Suite 1000
Washington, D.C. 20004
(202) 637-2200

*Attorneys for the Intercarrier Compensation Forum*


July 20, 2005

**AT&T Corp.**
Leonard J. Cali
Lawrence J. Lafaro
Joel E. Lubin
AT&T CORP.
One AT&T Way, Room 3A214
Bedminster, New Jersey 07921

David L. Lawson
James P. Young
SIDLEY AUSTIN BROWN & WOOD LLP
1501 K Street, N.W.
Washington, D.C. 20005
*Counsel for AT&T Corp.*

**General Communication, Inc.**
Tina Pidgeon
Vice President- Federal Regulatory Affairs
GENERAL COMMUNICATION, INC.
1130 17th Street, N.W.
Suite 410
Washington, D.C. 20036

John T. Nakahata
HARRIS, WILTSHIRE & GRANNIS LLP
1200 Eighteenth Street, NW
Suite 1200
Washington, D.C. 20036
*Counsel for General Communication, Inc.*

**Global Crossing North America Inc.**
Paul Kouroupas
Vice President, Regulatory Affairs
GLOBAL CROSSING NORTH AMERICA, INC.
200 Park Avenue, 3rd Floor
Florham Park, New Jersey 07932

**Iowa Telecom**
D. M. Anderson
Vice President - External Affairs
Edward B. Krachmer
Director - Regulatory Affairs
IOWA TELECOM
115 South Second Avenue West
Newton, Iowa 50208

**Level 3 Communications LLC**
William P. Hunt, III
Cindy Z. Schonhaut
LEVEL 3 COMMUNICATIONS LLC
1025 Eldorado Boulevard
Broomfield, Colorado 80021

John T. Nakahata
HARRIS, WILTSHIRE & GRANNIS, LLP
1200 18th Street, N.W. Suite 1200
Washington, D.C. 20036
*Counsel for Level 3 Communications LLC*

**MCI, Inc.**
Richard S. Whitt
Vice President Federal Regulatory
MCI, INC.
1133 19th St. N.W.
Washington, D.C. 20036

A. Richard Metzger, Jr.
LAWLER, METZGER, MILKMAN & KEENEY, LLC
2001 K Street, N.W., Suite 802
Washington, D.C., 20006
*Counsel for MCI, Inc.*

**SBC Communications Inc. on behalf of its affiliates**
Christopher M. Heimann
Gary L. Phillips
Paul K. Mancini
SBC TELECOMMUNICATIONS, INC.
1401 Eye Street, N.W.
Washington, D.C. 20005

**Sprint Corporation**
Richard Juhnke
Charles McKee
Jeff Lindsey
Pete Sywenki
SPRINT CORPORATION
401 Ninth Street, N.W.
Washington, D.C. 20004

**Valor Telecommunications, LLC**
William M. Ojile, Jr.
Senior Vice President, Chief Legal Officer & Secretary
VALOR TELECOMMUNICATIONS, LLC
201 East John Carpenter Freeway
Irving, Texas 75062

**Summary**

The record in this proceeding confirms that the ICF Plan reasonably balances the myriad different perspectives on intercarrier compensation reform in a way that produces maximum public interest benefits, as confirmed by the attached economic study prepared by noted economists Richard N. Clarke, Thomas J. Makarewicz, and Brian K. Staihr. These economists conclude that, over its eight-year life, the ICF Plan will produce direct consumer benefits within the wireline and wireless industries alone of over $44 billion. Its spillover benefits to the overall economy are likely to total an additional $61 billion, for an overall actual positive impact of roughly $105 billion.

*The ICF Plan Strikes a Balance Between the Extreme Plans Submitted by Others*

Beyond creating these consumer benefits, the ICF Plan offers the Commission a reasonable middle ground between the perpetual regulatory intervention advocated by supporters of calling party network pays schemes and the complete abdication of regulatory responsibilities supported by Verizon. Rather than embracing either of these two extremes, the ICF Plan proposes viable means through which the Commission can achieve *both* the deregulatory *and* the pro-competitive goals of the Telecommunications Act of 1996. In basing the ICF Plan on bill-and-keep principles, we have chosen an established pricing methodology that already has an established place in today's ratemaking. In expanding the role these principles play, the ICF Plan promotes the growth of efficient competition by eliminating charges for origination and termination facilities, and making explicit other significant sources of implicit universal service support. Contrary to the arguments of some commenters, the ICF Plan allows ILECs an opportunity to recover revenues that may be lost through access reductions, but it does not offer ILECs any guarantees of revenue neutrality in the face of growing competition.

*Reform Must Be Comprehensive, Not Piecemeal*

Many commenters agree with the ICF that the Commission needs to tackle the entire interrelated complex of network interconnection, intercarrier compensation, and universal service problems that plague the industry today. These commenters thus agree that, to solve today's problems, the Commission must create broad uniformity between the rate structures and levels governing intrastate and interstate traffic, as well as between the packet-switched and circuit-switched worlds. In addition, many diverse commenters acknowledge that the Commission must establish competitively neutral default rules for network interconnection. While carriers should be free to negotiate alternative arrangements, comprehensive default rules are necessary to ensure that traffic continues to flow, even in the absence of agreement.

Reform cannot be piecemeal or optional. All PSTN traffic must be covered. Allowing states to "opt out" of reform for some classes of traffic is not required by law and does not serve the public interest.

*The ICF Plan Preserves and Advances Universal Service*

Most commenters agree that any reform effort must ensure continued preservation and enhancement of universal service—both in creating new explicit support flows to replace the implicit support being eliminated from intercarrier compensation rate structures, and in reforming today's unstable contribution mechanism. Commenters that disagree with particular elements of the ICF Plan almost invariably do so to safeguard or advance their own parochial interests, often in a short-sighted manner. As a result, most other proposals before the Commission offer incomplete solutions that would fail to maximize consumer benefits. The value of the ICF Plan is precisely that its solution optimizes the multi-dimensional tradeoffs involved in a way that other proposals cannot.

*The ICF Plan Creates a Rational Transition from the Circuit Switched World to the IP World.*

Finally, the ICF Plan offers the only viable transition from today's circuit-switched to the IP future that does not require the Commission to impose inefficient legacy regulation on the IP sphere. There is broad agreement that the fundamental inconsistencies between the market-driven compensation systems that apply to IP networks and the patchwork of legacy regulations that govern today's PSTN communications cannot survive the ongoing convergence of IP and circuit-switched communications. The question is how these systems will be harmonized. Other CPNP-based plans would force the Commission to shackle the networks of the future to inefficient legacy economic regulations, while the ICF Plan offers the Commission an opportunity to harmonize its regulation of the PSTN with today's market-driven IP network compensation practices.

For these reasons, the Commission should adopt the ICF Plan in full, without modification and without delay.

# Table of Contents


I. INTRODUCTION ..... 1

II. THE ICF PLAN OCCUPIES A REASONABLE MIDDLE GROUND BETWEEN THE EXCESSIVE INTERVENTIONISM PROPOSED BY ADVOCATES OF CPNP SCHEMES AND THE REGULATORY NEGLECT PROPOSED BY VERIZON ..... 3

A. THE ICF PLAN IS SUPERIOR TO ANY CPNP ALTERNATIVE ..... 4
1. The ICF Plan Is Based On An Established And Reliable Methodology ..... 6
2. The ICF Plan Is More Market-Oriented and Competitively Neutral than Plans Based On CPNP ..... 8
3. The ICF Plan, Unlike Plans Based On CPNP, Creates No Perverse Regulatory Incentives ..... 12
B. PROPOSALS FOR COMPLETE DEREGULATION ARE MISGUIDED ..... 15

III. THE ICF PLAN WILL IMPROVE CONSUMER WELFARE BY AT LEAST $44 BILLION, AND IT WILL NOT RESULT IN HIGHER END-USER BILLS ..... 20

A. THE ICF PLAN IS THE ONLY PLAN THAT FULLY ELIMINATES THE INEFFICIENCIES IN TODAY'S INTERCARRIER COMPENSATION REGIME ..... 22
1. The ICF Plan Eliminates Artificial Suppression of Demand ..... 22
2. The ICF Plan Fosters Investment and Technological Innovation ..... 24
3. The ICF Plan Enhances Customer Choice ..... 24
4. The ICF Plan Reduces Administrative Costs ..... 26
B. MOST CONSUMERS WOULD SEE IMMEDIATE RATE DECREASES UNDER THE ICF PLAN ..... 27

IV. THE CRITICISMS OF THE ICF PLAN IN THE RECORD ARE UNFOUNDED ..... 28

A. THE ICF'S EDGE RULES ARE SENSIBLE, APPROPRIATELY DETAILED, AND ENJOY BROAD SUPPORT IN THE RECORD ..... 29
1. The Edge Rules are Simple and Straightforward ..... 30
2. The Details of the Edge Rules Make Their Operation Simpler, Not More Complex ..... 31
3. The Edge Rules Do Not Discriminate For Or Against Non-Hierarchical Carriers ..... 33
4. The Transiting Rules Do Not Discriminate Against Rural Carriers ..... 36
5. The Edge Rules Are Defaults Only ..... 37
6. As Applied to Centralized Equal Access Providers, the Edge Rules Are Clear ..... 39
B. THE ICF PLAN PROVIDES ILECS WITH AN OPPORTUNITY TO ACHIEVE REVENUE NEUTRALITY, BUT NO ENTITLEMENT TO DO SO ..... 41

V. THE COMMISSION HAS AMPLE AUTHORITY UNDER EXISTING LAW TO IMPLEMENT THE ICF PLAN IN ITS ENTIRETY ..... 45

A. THE COMMISSION MAY ESTABLISH UNIFORM COMPENSATION ARRANGEMENTS FOR ALL CATEGORIES OF TRAFFIC ..... 46
B. THE COMMISSION MAY IMPOSE A DEFAULT INTERCARRIER COMPENSATION REGIME BASED ON BILL-AND-KEEP PRINCIPLES FOR ALL TRAFFIC SUBJECT TO SECTION 251(B)(5) ..... 52
C. THE COMMISSION HAS AUTHORITY TO ADOPT THE TRANSIT SERVICE PROVISIONS OF THE ICF PLAN ..... 56
D. THE COMMISSION SHOULD NOT REFER THE ICF PLAN TO A FEDERAL-STATE JOINT BOARD ..... 57

VI. NONE OF THE NEW OR REVISED PLANS SUBMITTED AFTER THE COMMISSION RELEASED ITS FURTHER NOTICE WOULD SERVE THE PUBLIC INTEREST ..... 59

A. THE NARUC TASK FORCE PROCESS IS COMMENDABLE, BUT VERSION 7 OF THE TASK FORCE PROPOSAL RETAINS SERIOUS SHORTCOMINGS ..... 59
B. THE COMMISSION SHOULD REJECT REFORMS THAT ARE INCONSISTENT WITH THE ONGOING MIGRATION OF IP NETWORKS AND SERVICES, OR THAT WOULD REQUIRE SUBSTANTIAL ALTERATION OF IP-IP INTERCONNECTION AND COMPENSATION ARRANGEMENTS ..... 62

C. NO OTHER PLAN APPROPRIATELY BALANCES THE CONCERNS OF RURAL CARRIERS WITH THOSE OF COMPETITIVE PROVIDERS ..... 67
D. THE OTHER PROPOSALS BEFORE THE COMMISSION SUFFER FROM A HOST OF ADDITIONAL FATAL FLAWS ..... 73
1. Draft Principles are not enough ..... 73
2. There Is No Sound Affirmative Argument In Favor Of Retaining Either Originating Or Terminating Access Charges. ..... 74
3. Capacity-based Charges Are Unworkable and Do Not Resolve the Issues Pending Before the Commission ..... 84
4. Plans that Fail to Provide an Adequate Transition Period Will Harm Consumers and Stifle Competition ..... 86
5. No other Plan Achieves Neutral Default Network Interconnection Rules While Protecting Rural Interests ..... 87
6. The Rate Benchmarking Proposals Need Further Refinement ..... 88

VII. CONCLUSION ..... 92

**Before the**
**Federal Communications Commission**
**Washington, DC 20554**

| | |
|---|---|
| In the Matter of<br><br>Developing a Unified Intercarrier Compensation Regime | CC Docket No. 01-92 |

**Reply Comments of the Intercarrier Compensation Forum**

The Intercarrier Compensation Forum ("ICF"), through the undersigned, hereby offers these Reply Comments on the Commission's recent Further Notice of Proposed Rulemaking ("Further Notice") in the above-captioned proceeding.[1] We urge the Commission to adopt the ICF Plan for reform[2] in its entirety.

## I. INTRODUCTION

The Commission has now received scores of submissions, each of which reflects a different perspective on intercarrier compensation reform. But there is some agreement at the conceptual level. First, most commenters agree with the ICF that the Commission must tackle *all* the problems in today's compensation system, creating uniformity among the intrastate and interstate systems, and between the packet-switched and circuit-switched worlds. Second, most commenters acknowledge that it is essential to establish competitively neutral default rules for intercarrier interconnection: while carriers should be free to negotiate alternative arrangements, comprehensive default rules are needed to ensure that there is efficient interconnection in the absence of agreement. Third, most commenters agree that any reform effort must preserve and

---

1 *Developing a Unified Intercarrier Compensation Regime*, CC Docket No. 01-92, Notice of Proposed Rulemaking, FCC 05-33, 20 FCC Rcd 4685 (2005) ("Further Notice").

2 *Developing a Unified Intercarrier Compensation Regime*, CC Docket No. 01-92, Letter from Gary M. Epstein and Richard R. Cameron to Marlene H. Dortch (filed Oct. 5, 2004) (the "ICF Plan" or "the Plan").

enhance universal service, and redress the current inefficiencies in contributions and distributions.

Unlike the competing schemes offered by other commenters, which almost invariably seek to promote only their own parochial interests, the ICF Plan addresses the interests of *all* network users and accommodates new technologies through an efficient and comprehensive proposal for reform. The ICF Plan's various proposals work together to benefit the industry *as a whole*, with the primary goal of promoting *consumer* welfare. An economic study prepared by the ICF, attached to these comments as Attachment A, demonstrates that, over its eight-year life, the ICF Plan will improve consumer welfare by at least $44 billion, with a multiplier effect on the entire economy on the order of $114 billion.[3]

The discussion below explains why the ICF Plan is the best proposal for achieving comprehensive and balanced reform. In Section II, we discuss how the ICF Plan strikes an appropriate balance between the highly interventionist calling-party's-network-pays ("CPNP") approach favored by adherents of legacy regulation and the complete abandonment of regulatory oversight proposed by Verizon.

In Section III we discuss the most compelling and important reasons to adopt the ICF Plan. In this section we explain *and quantify* the enormous consumer benefits the Plan would create. Our economic analysis confirms that the ICF Plan will cumulatively improve consumer welfare over the eight-year life of the Plan by at least $44 billion.

In Section IV we take on the criticisms lodged against the ICF Plan, and demonstrate that these criticisms are both unfounded and invariably grounded in narrow self-interest. We specifically focus on network interconnection and revenue recovery issues.

---

[3] *See infra* Section III.

In Section V, we address commenters' concerns regarding the Commission's legal authority to implement the ICF Plan, and demonstrate the Commission's jurisdictional and substantive authority to implement the Plan in its entirety.

And in Section VI, we demonstrate that the other plans submitted during the initial round of comments would not promote the public interest.

## II. THE ICF PLAN OCCUPIES A REASONABLE MIDDLE GROUND BETWEEN THE EXCESSIVE INTERVENTIONISM PROPOSED BY ADVOCATES OF CPNP SCHEMES AND THE REGULATORY NEGLECT PROPOSED BY VERIZON

Broadly speaking, the parties have proposed three types of intercarrier compensation regimes, which occupy different spots along the policy spectrum from maximal government intervention to complete abandonment of any market oversight. First, at one pole, some carriers propose continued adherence to the current, highly interventionist scheme known as CPNP, under which each carrier recovers a portion of its network costs from other carriers (and ultimately their customers) rather than from its own end user customers.[4] As discussed below, this approach would require regulators to continue regulating the ensuing intercarrier rates in perpetuity, no matter how competitive the retail market becomes. At the other end of the spectrum is the entirely unregulated approach advocated primarily by Verizon, under which regulators would leave all intercarrier disputes to the free play of market forces. This approach would entitle a carrier to charge other carriers whatever the market will bear for the privilege of

---

[4] As in our opening comments (at 14 n.24), we are using the term "CPNP" broadly to encompass any approach (such as today's reciprocal compensation and access charge schemes) in which regulators permit a carrier to recover from other carriers the portion of its network costs attributable to the calls placed by those other carriers' customers. In two-carrier calls, the calling party's network is the originating carrier, and it must cover not just its own costs but also the carrier's costs of termination. The access charge regime governing traditional three-carrier long-distance calls is also a form of CPNP. In that context, the calling party's carrier is the IXC in the middle, and it is responsible for covering all the costs of a call, including both originating and terminating access.

exchanging traffic with its network—and, in effect, to refuse interconnection with any carrier that fails to pay that price.

In between proposals for maximal regulation and complete abandonment of any regulatory role are proposals for a bill-and-keep methodology.[5] Under this methodology, each carrier is generally expected to recover its network costs for two-connectivity from (and justify them to) its own end users instead of recovering them from other carriers. Bill-and-keep is supported by a broad cross-section of the industry, including not just the diverse members of the ICF, but also the principal trade associations for the wireless and cable industries (CTIA and NCTA) as well as Qwest and Western Wireless. The ICF Plan is based on bill and keep principles modified to recognize the special concerns of rural customers and carriers, and stakes out a reasonable middle ground between the proposals for maximal regulatory intervention and no oversight at all. Before we respond to comments on the details of the ICF Plan, we first explain why the ICF Plan is far preferable to the alternatives on each end of the methodological spectrum.

### A. The ICF Plan is Superior to any CPNP Alternative

Commenters advocating a regulatory methodology other than bill-and-keep generally support one variation or another on CPNP. As discussed below, even if the Internet had never been created, bill-and-keep would still be far preferable to any CPNP alternative. The ICF Plan permits measured deregulation of the PSTN as retail competition grows and thus a greater reliance on market forces to pick the industry's winners and losers, whereas CPNP would require market-distorting government intervention for as long as the PSTN exists.

---

[5] In bill-and-keep, the end user pays for both the origination and termination functions provided by its network access connection. Bill-and-keep includes payments by explicit federal and state universal service mechanisms, not just end user subscriber-generated revenue.

Over the very long term, moreover, a plan based on bill-and-keep principles stands head-and-shoulders above CPNP for an even more fundamental reason, which warrants emphasis at the outset. Unlike a plan based on CPNP, the ICF Plan serves as a workable transitional methodology as millions of American consumers stand poised to run voice services as just one IP-based application among many over competing broadband platforms. By ratcheting down the level of government intervention in the market, and by efficiently weaning carriers of their current reliance on implicit (as opposed to explicit) cross-subsidies, the ICF Plan prepares the way for a communications world that might someday be as competitive and deregulated as the Internet backbone is today. In contrast, CPNP—by its very nature—establishes a set of regulatory assumptions that can make sense only where inter-provider relationships are similar to those that characterized the PSTN for the past half century.

One such assumption, exemplified by the CBICC and Rural Alliance plans, is that the calling party in any call will have a designated "retail provider," such as a preselected IXC, that bears an obligation to cover the costs of the call, including originating access.[6] Whatever the merits of that approach for traffic on the PSTN, where retail providers are telecommunications carriers in their own right, it raises profoundly indeterminate questions of application with the rise of IP-based applications that run on top of broadband platforms. For example, a customer with a broadband connection might purchase retail services from a great variety of Internet-based applications providers, such as VoIP providers, ISPs, and on-line music services, all of which use the broadband connection for access to that customer. Under the CPNP proposals discussed here, would each of those providers incur an obligation to pay, for the first time, the equivalent

---

[6] *See* CBICC Proposal at 2; Rural Alliance Comments at 13; ARIC Plan at 33-36.

of originating access charges to the broadband provider for the use of its platform? If not, why not?

Such questions underscore the destabilizing uncertainties that these CPNP proposals would introduce into a communications world increasingly defined by business relationships that bear no close resemblance to any aspect of the PSTN-based business model for which these proposals were designed. In contrast, the ICF Plan, which defines intercarrier obligations in terms of physical networks rather than retail relationships, avoids these business-model concerns altogether and, unlike the CPNP alternatives, prescribes robust rules that will still make sense as increasing amounts of traffic move onto the Internet. With that basic consideration in mind, we now turn to why bill-and-keep is far preferable to CPNP even apart from its greater adaptability to this epochal industry transition.

### 1. The ICF Plan Is Based On An Established And Reliable Methodology

As an initial matter, much of the attack on the ICF Plan by CPNP advocates consists of a single epithet—"radical"—in search of substance.[7] In fact, bill-and-keep has an established pedigree in U.S. telecommunications regulation. First, and most obviously, it has long been the prevailing rule for the exchange of traffic originated and terminated by adjacent LECs. Although the traffic flows between such LECs historically may have been "in balance," the Commission has not limited bill-and-keep to such symmetrical arrangements. Just four years ago, the Commission adopted what it deemed a "transition towards a complete bill-and-keep recovery mechanism" for all ISP-bound traffic,[8] and it did so not in spite of the traffic

---

[7] *E.g.*, PacWest Comments at i, 4, 29, 37, 38, 55; Rural Alliance Comments at 57, 112, 157.

[8] *Implementation of the Local Competition Provisions in the Telecommunications Act of 1996*, CC Docket No. 96-98, Order on Remand and Report and Order, FCC 01-131, 16 FCC Rcd 9151 (2001) ("ISP Recip. Comp. Remand Order") at ¶ 7.

imbalances between ILECs and ISP-serving CLECs, but precisely *because of* those imbalances. Likewise, in the text of the 1996 Act, Congress expressed its own familiarity with and support for bill-and-keep when it took special care to authorize, without qualification, arbitrated "arrangements that waive mutual recovery (such as bill and keep arrangements)."[9]

In addition, bill-and-keep is already, in some sense, an implicit element even of today's CPNP-based reciprocal compensation scheme. Under that scheme, a terminating carrier does not collect from other carriers all the costs attributable to the termination of the traffic originated by those other carriers. Even if the carrier must install particularly fat loops in order to handle the volume of incoming traffic originated by other carriers, it must recover the costs of those loops entirely from its own subscribers, not from those other carriers.[10] For that reason, today's reciprocal compensation regime for non-ISP-bound traffic can even be conceptualized as a variation of bill-and-keep, with the financial POI—the point beyond which the originating carrier bears no further responsibility to cover the terminating carrier's costs—at the line side of the terminating carrier's end office switch.

Our objective, of course, is not to minimize the distinction between CPNP and bill-and-keep, for there are obviously important differences relating to the recovery of certain transport and switching costs. Our point is merely to underscore that regulators have always—uncontroversially—expected each carrier to recover from its own end users, rather than other carriers, *some* subset of the costs attributable to the need to terminate calls originated by those other carriers. From this perspective, the ICF Plan and its CPNP alternatives differ more in

---

9 47 U.S.C. § 252(d)(2); *see also infra* Section V (discussing bill-and-keep savings clause).

10 *Implementation of the Local Competition Provisions in the Telecommunications Act of 1996*, CC Docket No. 96-98, First Report and Order, FCC 96-325, 11 FCC Rcd 15499 (1996) ("Local Competition Order") ¶ 1057 (subsequent history omitted); *see also* Time-Warner Telecom Comments at 13-14.

degree than in kind. Specifically, the Plan makes the terminating carrier that much *more* responsible to its end users for recovering its network costs, presenting significant long-term advantages over CPNP, as discussed below.

### 2. The ICF Plan Is More Market-Oriented and Competitively Neutral than Plans Based On CPNP

In addition to restoring stability and regulatory uniformity to an industry that badly needs both, the ICF Plan would permit the steady deregulation of the telecommunications industry over the long term and a greater reliance on market forces to serve the interests of consumers. That is because there is generally no need to regulate the rates that a carrier in a competitive market—or a non-dominant carrier in any market—may charge its own customers, for the ability of those customers to switch carriers disciplines retail prices. But if a carrier may instead recover many of its network costs from providers serving different customers, no market mechanism can normally deter the carrier from exploiting the terminating access monopoly and related economic phenomena to charge above-cost prices.[11] Thus, any CPNP approach, precisely because it permits each carrier to recover many of its costs from other carriers, would require perpetual regulation—even of small non-dominant carriers—to cap those intercarrier payments at cost-based levels.

Advocates of CPNP respond that the deregulatory benefits of bill-and-keep would be limited because the end user rates of ILECs (to the extent they are dominant in given markets) would still require various forms of retail price regulation.[12] That argument is wrong in two respects. First, the ICF Plan would permit significant deregulation today because, among other

---

[11] *See* ICF Comments at 13-15; *Access Charge Reform*, CC Docket No. 96-262, Seventh Report and Order and Further Notice of Proposed Rulemaking, FCC 01-146, 16 FCC Rcd 9923 (2001) ("CLEC Access Charge Order") ¶¶ 28, 31 (describing terminating access monopoly and exacerbating role of section 254(g)).

[12] *See, e.g.,* Time-Warner Telecom Comments at 40-41.

considerations, non-dominant carriers are already significant terminators of traffic and, in that capacity, will require close regulatory oversight so long as CPNP remains the rule. That was the lesson the Commission learned when it found it necessary to impose new caps on the rates certain CLECs could charge for terminating dial-up traffic to ISPs[13] and access traffic to ordinary end users.[14]

Just as important, this criticism of the ICF Plan is completely myopic, for the growth of competition in the retail market will permit—indeed, demand—further deregulation of retail prices. This proceeding, which has already lasted several years, will presumably culminate in rules designed to last many years. The question the Commission confronts is thus not only whether the ICF Plan presents obvious advantages over any CPNP scheme *today* (although it does), but whether it will present such advantages ten years from now. It plainly will. As the industry becomes increasingly competitive, and thus increasingly characterized by providers of products that are outside retail price regulation, the choice between any CPNP approach and the ICF Plan is a choice between needlessly heavy market intervention, on the one hand, and maximal reliance on market forces, on the other.

Advocates of CPNP schemes also suggest that the costs of unnecessary regulation are low—that regulation is, in effect, no less capable than market forces of "getting the rates right," and that state commissions have all reached a happy consensus on how to calculate the forward-looking switching and transport costs associated with call termination.[15] This is untenable. These opponents appear unaware that regulators have tried and failed for many years

---

13 *ISP Recip. Comp. Remand Order.*

14 *CLEC Access Charge Order.*

15 *E.g.,* PacWest Comments at 6 ("the 'heavy lifting' to establish a cost-based intercarrier compensation regime has been completed"); c*f.* Time-Warner Telecom Comments at 9 ("perfection in ratemaking . . . is impossible").

to produce prices for origination and termination services that are accurately structured to reflect the underlying "costs" of providing those services.[16] More generally, as illustrated by the intractable litigation about access charges, UNE prices, and reciprocal compensation rates, regulatory rate-setting—while obviously necessary in some contexts—is destabilizing, unpredictable, and inherently inferior to market forces at sending economically correct price signals by matching rates to underlying costs.

The fault, moreover, lies not with regulators, but with the types of regulatory questions they are asked to resolve. It is essentially impossible for regulators to "get the rates right" even when the Commission has answered all the basic methodological questions about what one carrier should pay another. First, as the experience in the states has shown, regulators acting in good faith can and do disagree profoundly in the application of a single methodology—e.g., TELRIC—to any given rate element, such as end office switching.[17] For that very reason, the Commission could not lawfully establish a uniform intercarrier compensation scheme if it follows CPNP principles, because that methodological choice, unlike bill-and-keep, preserves a

---

16 *See Texas Office of Public Util. Counsel v. FCC*, 265 F.3d 313, 328-29 (5th Cir. 2001) (invalidating Commission's choice of X-factor for access charges); *United States Tel. Ass'n v. FCC*, 188 F.3d 521 (D.C. Cir. 1999) (same); *ISP Reciprocal Compensation Remand Order*, ¶ 76 (expressing concern that some CPNP-based "market distortions . . . cannot be cured by regulators . . . simply attempting to 'get the rate right" because of "the vexing problems regulators face" when they try).

17 *See, e.g., AT&T Corp. v. FCC*, 220 F.3d 607, 615-16 (D.C. Cir. 2000) (because "enormous flexibility is built into TELRIC," "application of TELRIC principles may result in different rates in different states"); Notice of Proposed Rulemaking, *Review of the Commission's Rules Regarding the Pricing of Unbundled Network Elements and the Resale of Service by Incumbent Local Exchange Carriers*, 18 FCC Rcd 18,945, ¶¶ 6-7 (2003) (expressing concern that the TELRIC inquiry can be "a 'black box' from which a variety of possible rates may emerge" and that "the variable results may not reflect genuine cost differences").

broad state role in determining actual rates.[18] Second, regulators cannot, and should not, be expected to keep pace on a monthly basis with the latest price-reducing developments in termination rates. And, even if they could, the industry's inability to predict what regulators will do tends to skew the market. The ICF Plan would altogether eliminate that problem by specifying a single, predictable, and permanent solution to the recovery of origination and termination costs.

Likewise, any CPNP-based plan is inherently at odds with principles of competitive neutrality, for it would continue to require regulators, rather than the market, to resolve the proliferating disputes about the relative value of different technologies and network architectures. For example, CLECs and ILECs have long argued about whether a typical CLEC, which uses fewer switches and longer loops than a typical ILEC, should be able to charge the equivalent of an ILEC's higher "tandem" switching rates for call termination over an end office switch that serves a geographic area comparable that served by an ILEC's tandem switch. CLECs and ILECs also argue about whether carriers that specialize in terminating traffic to a specific kind of customer—such as ISPs—incur lower termination costs and should therefore be compensated less.[19] And wireline LECs and wireless carriers argue about whether the latter incur higher termination costs than the former.[20]

---

18 There is no merit to claims that the ICF Plan would itself violate state prerogatives in setting intercarrier rates. Under *AT&T Corp. v. Iowa Utilities Board*, 525 U.S. 366, 378 (1999), the Commission has unquestioned authority to interpret the scope of the bill-and-keep savings clause, 47 U.S.C. § 252(d)(2)(B)(i), and wherever the Commission determines that the clause should apply, that determination binds state commissions.

19 *See ISP Recip. Comp. Remand Order*, ¶ 93.

20 *See, e.g, Cost-Based Terminating Compensation for CMRS Providers, Interconnection Between Local Exchange Carriers and Commercial Mobile Radio Service Providers*, CC Docket No. 95-185, Order, 18 FCC Rcd 18,441 (2003), *aff'd sub nom. SBC Inc. v. FCC*, ___ F.3d ___, 2005 WL 1645696 (3rd Cir. July 14, 2005); *Developing a Unified*

To resolve such disputes, regulators must make intrusive, value-laden comparisons among incommensurable network architectures and technologies and the costs they generate in handling particular kinds of traffic. A key benefit of the ICF Plan, in contrast, is that it would shift the *forum* for resolving these disputes from regulatory proceedings to the market. Because each carrier would generally have to recover its network costs from its own customers rather than from other carriers (and ultimately their customers), each carrier would have to persuade its customers that the value of the service it provides them justifies the price it charges them. The market is uniquely proficient in resolving such issues; centralized regulatory bodies are not. And no carrier should be forced to underwrite, through another carrier's origination or termination rates, that other carrier's choice of technology or network architecture. Each carrier should have its choice validated—or not—on the basis of its own customers' willingness to pay its retail rates.

### 3. The ICF Plan, Unlike Plans Based On CPNP, Creates No Perverse Regulatory Incentives

There is no basis for the time-worn argument, still repeated by some commenters, that CPNP adheres more closely than bill-and-keep to economic principles of cost causation on the theory that the calling party "causes" all the costs of a call.[21] That is obviously incorrect: for example, the called party helps cause those costs simply by listing its telephone number and agreeing to take a given call, and the called party's network is also free to choose more or less costly terminating technology. And, as the Commission observes, "[d]evelopments in the ability of consumers to manage their own telecommunications services"—through caller ID, among other means—"undermine the premise that the calling party is the sole cost causer and should be

---

*Intercarrier Compensation Regime*, CC Docket No. 01-92, Notice of Proposed Rulemaking, FCC 01-132, 16 FCC Rcd 9610 (2001) ("Notice") ¶¶ 104-05.

21 *E.g.*, Rural Alliance Comments at 69.

responsible for all the costs of the call."[22] By splitting costs between the calling and the called parties' networks, bill-and-keep is thus *at least* as faithful as CPNP to principles of cost causation. And, as noted above, even CPNP does not itself, in practice, assign the responsibility to the originating carrier for covering all the costs of a call, since it requires the terminating carrier to pay for whatever loop capacity it needs to complete calls originated by other carriers.

There is likewise no merit to the long-discredited claim that bill-and-keep would create perverse incentives for carriers to specialize in originating traffic or that it would increase the volume of unwanted calls.[23] As the Commission has explained, "[a] carrier must provide originating switching functions and must recover the costs of those functions from the originating end-user, not from other carriers. Originating traffic thus lacks the same opportunity for cost-shifting that reciprocal compensation provides with respect to serving customers with disproportionately incoming traffic."[24] More generally, under any bill-and-keep arrangement, a carrier operating in a competitive environment will succeed in charging its end users only for the portion of network costs *for which it is legally responsible*—which, under the ICF Plan, are the costs of delivering the call to the terminating carrier's Network Edge. There could be no artificial regulatory incentive for a carrier to specialize in originating traffic, because the price it could successfully charge for performing that function would need to cover the quite substantial costs of origination plus some significant portion of transport. Other carriers, including those

---

22 Further Notice, ¶ 17.

23 *See, e.g.,* Verizon Comments at 14-15; Rural Alliance Comments at 63-65.

24 *ISP Recip. Comp. Remand Order* ¶ 73**.**

that do *not* specialize in originating traffic, would be equally capable of performing these same functions at the same cost-based rates and at no regulatory disadvantage.[25]

For that reason, it is logically incoherent to criticize the ICF Plan on the ground that it would "subsidize" call-originators such as telemarketers or increase the number of unwanted calls. In any event, even if the Plan did somehow create new incentives to place unwanted calls, the appropriate solution would be not to reject the ICF Plan, but to allow the market to address the problem of unwanted calls directly. Consumer demand has already produced highly effective caller identification and call blocking technologies to shield subscribers from unwanted calls.[26] And even if the market could not be trusted to continue solving the problem, the correct regulatory response would be to enforce direct restrictions on the ability of telemarketers to place calls to nonconsenting individuals, as the FCC and FTC have done in creating and enforcing the national "do not call" registry.[27]

Finally, a number of commenters, particularly those that represent rural interests, oppose the ICF Plan because, by shifting network costs to end users rather than IXCs, it would reduce the implicit cross-subsidies that smaller ILECs currently receive, including those currently effectuated through the geographic averaging mechanism of 47 U.S.C. § 254(g).[28] It is

---

[25] Of course, to the extent that a carrier can build a more *efficient* network for originating calls, and can thus charge customers less by specializing in that service, regulators should permit it to do so. It would make no sense to create artificial disincentives for the invention of a better mousetrap simply because the invention is particularly adept at catching one type of mouse.

[26] *See* Further Notice, ¶ 17.

[27] *See* 16 C.F.R. § 310.4(b)(1); 47 C.F.R. § 64.1200(c)(2); *see also* 47 C.F.R. § 64.1200(a)(1)(iii) (limiting the types of calls that can be placed to the subscribers of any wireless service "or any [other] service for which the called party is charged for the call").

[28] By reducing—and ultimately eliminating—originating and terminating access charges, the ICF Plan reduces a significant source of variation in the costs that a carrier must

undoubtedly true that CPNP is more effective than bill-and-keep in successfully concealing from public scrutiny many different types of implicit cross-subsidies. But that, of course, is a reason for adopting, not rejecting, the ICF's plan to move quickly towards a more explicit, sustainable, and competitively neutral set of funding mechanisms in this age of increasing competition. As discussed in Section III below, American consumers in both rural and non-rural areas will be substantially better off if the Commission makes that inevitable transition now rather than several more years from now, after competition has further strained the existing support mechanisms.

### B. Proposals for Complete Deregulation Are Misguided

As discussed, the ICF Plan is superior to plans based on CPNP because, among other advantages, it permits consumer preferences to select marketplace winners and losers and establishes a far better transition to a communications world increasingly characterized by IP-based applications. The remaining question is whether any transition is needed in the first place, or whether regulators should instead pull the plug on any oversight of PSTN-based intercarrier relationships. Some commenters suggest that, because the communications market is increasingly competitive, regulators should apply to the PSTN the same completely deregulatory approach they have applied to the Internet backbone, where providers may freely deny interconnection with others and charge whatever the market will bear for interconnection.[29] The Commission should reject that position.

Advocates of complete deregulation begin with the unremarkable premise that, whenever two networks interconnect, one of them may well derive more aggregate value than

---

average under § 254(g). Thus, the ICF Plan makes the overall objective of nationwide averaged and integrated toll rates more sustainable.

[29] *See, e.g.,* Verizon Comments at 8-11, 20-21.

the other from the ensuing exchange of traffic, depending on such variables as each network's size, customer profiles, and so forth.[30] That observation, while true, is not an argument for allowing carriers on the PSTN to refuse interconnection or to allow some carriers to charge an enormous premium for the privilege. It is simply a restatement of the market conditions (including strong network effects) that have prompted federal authorities for nearly a hundred years to require interconnection and to tie any associated payments, however loosely, to some conception of cost rather than to whatever degree of "value" a given network might attribute to interconnection with another.[31]

These are the same market conditions that led Congress, in 1996, to enact sections 251(b)(5) and 252(d)(2), which regulate the rates that two carriers may charge each other for exchanging traffic, as well as section 251(a), which prescribes mandatory interconnection among all classes of telecommunications carriers. As explained in the ICF's opening comments (and below), sections 251(b)(5) and 252(d)(2) instruct regulators to adopt *either* a CPNP scheme based strictly on the "additional costs" of terminating traffic *or* a bill-and-keep approach that enables each carrier to recover its network costs from its own end users.[32] Congress thereby sought to ensure that rates (whether in the form of intercarrier compensation or retail end-user charges) recover the economic *costs* of network functions, not that they precisely reflect the different "value" of interconnection to carriers of differing sizes or network characteristics.

---

30 *See id.* at 8-11.

31 *See generally* Gerald W. Brock, *Telecommunications Policy for the Information Age: From Monopoly to Competition* (1994) (surveying history of interconnection obligations from the Kingsbury Commitment of 1913 to the 1984 AT&T consent decree to the *Expanded Interconnection* proceeding of the 1990s).

32 *See* ICF Comments at 46-47.

That statutory mandate is fatal to proposals, such as Verizon's, for immediate complete deregulation of PSTN-based intercarrier relationships. While Verizon focuses on attacking bill-and-keep, the essential logic of that attack is every bit as inimical to any cost-based CPNP regime as to bill-and-keep proposals.[33] Verizon's approach would preclude bill-and-keep in many circumstances, and it would base intercarrier compensation *not* on each carrier's costs, but on each network's size, subscriber characteristics, and other attributes. And it would thus produce arrangements that pay radically different compensation levels to different carriers for performing identical functions with identical network costs. For that matter, the absence of regulatory oversight would sometimes permit an originating carrier to coerce a terminating carrier to pay for the privilege of *receiving* its traffic, as some ILECs did when interconnecting with wireless carriers before the Commission prohibited that practice in 1996.[34] It is difficult to imagine an approach more at odds with the text or basic regulatory premises of the 1996 Act.

Verizon nonetheless argues that paid transit arrangements among ISPs demonstrate the economic inefficiency of bill-and-keep, at least in some circumstances, and should serve as a model to follow in deregulating the PSTN.[35] This argument is flawed in two basic respects.

First, Verizon draws its analogy to the wrong set of Internet relationships, and the right analogy fully supports the ICF Plan, not Verizon's scheme for complete PSTN deregulation. The relevant question here is how a provider of network access—a LEC in the PSTN sphere, or an ISP in the Internet sphere—should recover the costs of that access: from its

---

33 *See* Verizon Comments at 8-11, 20-21.

34 *Local Competition Order*, ¶¶ 1042, 1087.

35 *See* Verizon Comments at 8-11; *see generally* Michael Kende, *The Digital Handshake: Connecting Internet Backbones*, FCC OPP Working Paper No. 32, at 7 (2000) (describing peering and transit).

own customers or from other providers? In the Internet, an ISP typically recovers all of its network costs—for all traffic, in both directions—from its own end users, who choose the capacity and quality of their Internet services, not from any other provider with which the ISP interconnects. For the PSTN, the ICF Plan embraces, and each CPNP alternative rejects, precisely this type of bill-and-keep model: it generally requires each LEC to recover from its own subscribers its network costs for traffic in both directions. By adopting this Internet model, the Plan, unlike the CPNP alternatives, lays the foundation for a smooth transition to a world increasingly dominated by Internet-related traffic.

Verizon's attempt to draw a contrary inference from Internet transit arrangements is therefore wholly misplaced. *Those* arrangements are most closely analogous to the transiting functions performed on the PSTN by a large regional LEC when connecting two other local networks that are not themselves directly interconnected. The ICF Plan recognizes—and no one seriously disputes—that a transiting LEC on the PSTN is entitled to compensation from these other networks, because by definition *its* customers are not involved in the calls at issue and therefore are neither the cost-causers nor the beneficiaries of the transiting functions provided. The primary difference between the PSTN transiting arrangements under the ICF Plan and Internet transit arrangements is that the Plan caps the rates that can be charged for PSTN transiting, whereas Internet transit is unregulated. But that difference simply arises from the economic differences between the PSTN and the Internet backbone.[36]

More generally, Verizon's Internet analogy founders on a basic economic distinction between Internet backbone services, such as transit, and the PSTN. The provision of

---

[36] We use the terms 'Internet backbone' and 'Internet backbone services' for purposes of this discussion to refer to a wide array of Internet connectivity services—including peering, transit, and combinations thereof—that are widely available to ISPs today.

Internet backbone services today is robustly competitive, in that smaller providers can purchase transit services from a range of providers.[37] That competition tends to reduce transit *rates* to the underlying *costs* of providing transit services—an indispensable component of any economically efficient allocation of resources.

There is—and, for the foreseeable future, will be—no similar, rate-disciplining competition among carriers for the ability to terminate calls placed to a single telephone number on the PSTN. First, as noted, the economic characteristics of the local exchange market differ from those of the Internet backbone in ways that have long been thought to justify regulation of the former but not the latter. That is one reason why, in sections 251(b) and 251(c), Congress imposed special interconnection-related obligations on local exchange carriers in addition to those imposed on non-LEC telecommunications providers. The second reason is the well-documented economic phenomenon, within that last mile, of the terminating access monopoly, which enables unregulated terminating carriers, even in fully competitive retail markets, to charge above-cost rates for terminating calls to particular telephone numbers on the PSTN.[38]

The impact of the terminating access monopoly on the PSTN is that regulatory oversight of some kind will remain necessary to align *rates* (whether imposed on other carriers or end users) with underlying network *costs*. Regulatory oversight of intercarrier relationships may become less necessary at some point in the future, if and when most or all consumers run voice as an application over broadband platforms—particularly if the providers of those platforms continue recovering their network costs, as they do today, from their own end users rather than from other providers. This proceeding, however, concerns intercarrier compensation

---

[37] Kende, *Digital Handshake*, at 20-22; GAO, *Telecommunications Characteristics and Competitiveness of the Internet Backbone Market* (Oct. 2001).

[38] *See* ICF Comments at 13-15; *CLEC Access Charge Order*, ¶¶ 28, 31 (describing terminating access monopoly and exacerbating role of section 254(g)).

for traffic involving the PSTN, and there is no reason to believe that the PSTN will become unimportant to American consumers within ten or fifteen years or any other relevant time horizon. Any proposal for complete deregulation of intercarrier relationships is thus entirely premature—and, simply as a legal matter, would first require the repeal of the most basic tenets of PSTN regulation.

## III. THE ICF PLAN WILL IMPROVE CONSUMER WELFARE BY AT LEAST $44 BILLION, AND IT WILL NOT RESULT IN HIGHER END-USER BILLS

As virtually all commenters recognize, today's system of intercarrier payment obligations is grossly inefficient, dampens and distorts investment incentives, and places debilitating obstacles in the path of carriers attempting to respond to the competitive imperatives of a new market. These drags on the efficiency and competitiveness of the industry impose billions of dollars of costs on consumers every year. Thus, "failure to reform intercarrier compensation is not an option."[39] Yet the non-ICF plans would keep in substantial measure these very drags on the efficiency of the system.

The ICF Plan will remove these inefficiencies and create enormous gains in consumer welfare. By rationalizing intercarrier pricing and stimulating consumer demand, the ICF Plan will increase incentives to invest and to develop innovative technological improvements and new service offerings. The Plan also eliminates the outdated local/toll distinction and will allow carriers to respond to consumer demand by creating larger calling areas and simpler calling plans. The Plan will also abolish access charges and thus enhance consumers' ability to make direct and meaningful comparisons between carriers. The elimination of most intercarrier payments, and the replacement of those payments with an easily administrable regime of "edge" rules and universal service funding, will halt a vast range of

---

[39] BellSouth Comments at 4.

intercarrier disputes and litigation. The corresponding certainty will substantially reduce carriers' administrative costs, create a more stable regulatory environment that fosters additional investment, and generate far greater gains in *consumer* welfare than any of the other proposed plans.

Indeed, the ICF Plan will generally result in overall rate *decreases* for end-users. Even in a completely static analysis that assumes no increased competitive pressure from intercarrier compensation reform, the majority of consumers would see lower bills, and special provisions of the ICF Plan ensure that all Lifeline users (more than 6 million consumers) are protected from rate increases. But of course the world is not static, and effective intercarrier compensation reform will intensify competition, which will make it difficult for carriers to maintain SLCs at the caps established under the ICF Plan. And these are only the immediate rate reductions that result directly from implementation of the ICF Plan's changes in intercarrier rates; the ICF Plan's rationalized pricing and decreased administrative costs will increase incentives for investment and will facilitate more innovative offerings, all of which should result in further rate decreases and further gains in consumer welfare over time.

We attach an Economists' Statement that quantifies the most easily measurable consumer welfare benefits that would result from the Plan, *i.e.*, the effect of eliminating the artificial suppression of demand for wireline and wireless services caused by today's inefficient system of intercarrier payments. The Economists' Statement indicates that the ICF Plan will likely improve consumer welfare over the eight-year life of the Plan by at least $44 billion, with a multiplier effect on the entire economy on the order of $114 billion.[40] The true benefits, of

---

[40] *See* Attachment A, Richard N. Clarke (AT&T), Thomas J. Makarewicz (SBC), and Brian K. Staihr (Sprint), "Economic Benefits from Reform of Intercarrier Compensation," July 20, 2005 ("Economists' Statement").

course, would be much larger, because the ICF Plan will also lead to more appropriate investment incentives, which will promote additional consumer welfare gains from accelerated technological changes and more effective competition.

### A. The ICF Plan Is The Only Plan That Fully Eliminates the Inefficiencies In Today's Intercarrier Compensation Regime

Intercarrier compensation reform, if done properly, holds the potential for enormous gains in consumer welfare, because today's system of intercarrier compensation is grossly inefficient in a number of ways. The result is that demand is artificially suppressed for toll and other services, and this suppressed demand in turn inhibits efficient investment. Investment incentives are further distorted by intercarrier rates that vary widely depending on the type of traffic or provider, and the cost of endless litigation over these rates.

The losers are consumers, who are deprived of billons of dollars of benefits every year. The purpose of the ICF Plan is to unlock the hidden potential in today's networks by properly aligning intercarrier rates with the underlying costs. The other plans implicitly concede the need for such reforms but propose only half-measures. Most competing plans keep the intercarrier rates that sap efficiency from the industry and merely reduce the rates or bring them closer to parity. But the full benefits from intercarrier compensation reform—elimination of artificially suppressed demand, stimulation of investment, increased customer choice, and elimination of litigation costs—can only be gained from the full elimination of most intercarrier payments. The ICF Plan increases consumer welfare as follows.

#### 1. The ICF Plan Eliminates Artificial Suppression of Demand

Today's inefficient intercarrier compensation system, and, in particular, the cross-subsidies built into long distance service, suppress demand, and the widely varying rate levels for what are essentially identical uses of the network send grossly distorted investment signals to the

market. The ICF Plan eliminates these inefficiencies by phasing out most intercarrier payment obligations and replacing them with end-user rates, many of which (like the increased SLC) will be flat-rated. Removing these inefficiencies from the system should stimulate demand for long distance services, and since the elasticity of demand for long-distance services generally exceeds that for local service,[41] there will be a substantial net gain for consumers as they enjoy more and better services at lower prices.[42]

Today, we are submitting an Economists' Statement that quantifies the consumer welfare gains that will result from converting per-minute access charges into end-user rates according the schedule laid out by the ICF Plan. The total nationwide incremental improvement in consumer surplus from the ICF Plan is approximately $7.0 billion per year upon completion of the Plan's switched access rebalancing, and this benefit continues each year for the remainder of the eight-year plan.[43] Including additional welfare gains from USF reform, the ICF Plan produces an annual net increase in consumer welfare in excess of $7.1 billion, which will be realized for every year of the Plan after phase-in. Over the entire life of the Plan (4 years of phase-in, 4 years of full effect), the cumulative benefits amount to over $44 billion.[44] And the benefits to the entire economy would be even more profound. Using the Commerce Department's RIMS II multipliers for the telecommunications sector, the effect on the entire

---

41 *See, e.g.*, *Developing a Unified Intercarrier Compensation Regime*, CC Docket No. 01-92, *Ex Parte* Filing of Mercatus Center, *Public Interest Comment on Unified Intercarrier Compensation* (filed May 23, 2005), at 6 & nn.21-24, ("Mercatus Paper") ("local service has a relatively low price elasticity of demand," and "this elasticity appears to have fallen over time" and "may even equal zero in the United States").

42 Mercatus Paper at 10 ("long-distance access charges harm consumers by taxing a price-sensitive service in order to subsidize a service whose use is not very sensitive to price" and elimination of such cross-subsidies would result in $2.5 billion to $7 billion annually in consumer welfare gains).

43 *See* Economists' Statement at 18.

44 *See id.* at 19.

economy could be as high as 2.56 times these figures, for a total potential annual benefit after phase-in of nearly $18 billion or a potential life-of-the-plan benefit of nearly $114 billion, and employment could also rise by 114,000 jobs.[45]

### 2. The ICF Plan Fosters Investment and Technological Innovation

Our estimates of consumer benefits are conservative, because they measure only the direct effects of eliminating the artificial demand suppression of today's inefficient intercarrier rates. But customer demand also creates incentives for investment and thus drives the *technological* growth of telecommunications. Rate structures for intercarrier compensation that accurately track the underlying costs of service will generate customer demand for those services at an economically efficient level, resulting in an economically optimal level of technological development and investment.

Because most of the other plans retain significant intercarrier payments, they would continue to suppress demand and blunt carriers' incentives to invest in the networks and technological advances.

### 3. The ICF Plan Enhances Customer Choice

The elimination of most intercarrier payments will also be a huge boon to consumer choice, because it will facilitate more rational retail pricing and more innovative retail offers. For example, most of the other proposals would retain originating access charges and thus continue to force the artificial local/toll distinction upon carriers that are trying to respond to the very different model of Internet pricing, which no longer recognizes such distinctions. The ICF Plan, by eliminating the local/toll distinction, will remove the obstacles to more innovative

---

[45] *Id*; *see also* Mercatus Paper at 10-13 (cataloguing similar findings).

pricing plans.[46] This is especially important in rural areas, where, under the ICF Plan, carriers will have greater freedom to design larger local calling areas that reduce the extent to which their customers must pay higher toll rates.[47]

Eliminating intercarrier payments will also promote competition by helping consumers make more accurate comparisons between carriers. Under the ICF Plan, carriers recover all of their costs from their own end-users, which enables consumers to get a more accurate picture of the value they receive from each provider with whom they contract for service.[48]

Rural consumers will also experience the added benefit of increased market competition because, in the context of today's disparate access rates, the rate averaging requirements of section 254(g) have led to a market failure. Many interstate carriers are not required to offer service in rural areas, and they inevitably limit their entry to low-cost states or to lower-cost urban areas, which allows them to offer lower retail rates than carriers serving higher-cost areas that must average their rates. Consequently, more and more interstate carriers are abandoning rural areas. The rate averaging requirements are thus becoming self-defeating, and are actually encouraging *de facto* retail rate deaveraging, as carriers increasingly choose to serve either high-cost or low-cost areas.[49] By phasing out most intercarrier payments, the ICF Plan is the only plan that eliminates this market failure while remaining true to the rate averaging

---

46 *See, e.g.,* SBC Comments at 7 (the local/toll distinction "inflict[s] enormous costs on the industry" and is being undermined by competition and technological change).

47 *See, e.g.,* Sprint Comments at 12 ("[W]ith the ICF Plan, rural LECs could readily offer their customers a LATA-wide local service, because their cost to provide LATA-wide local service would be no more than the cost for their current small local calling areas.").

48 *See supra* Section II, at 12.

49 *See, e.g.,* GCI Comments at 4-7, 9-10.

requirements, *i.e.*, it creates true uniformity by eliminating today's hodgepodge of intercarrier rates (which supports rather than undermines rate averaging), and it provides for recovery of those costs through an increased SLC and funding from the USF, which allows today's web of implicit subsidies to be replaced with explicit funding.

#### 4. The ICF Plan Reduces Administrative Costs

Finally, today's complex system of intercarrier obligations is plagued by endless uncertainty, and perpetual litigation concerning rate levels, pricing methodologies, regulatory classification of services, rate structures, and other features of the regulatory regime governing intercarrier rates. These disputes not only impose substantial costs on carriers and hamper productivity, but also create uncertainty throughout the industry and hamstring investment and planning.[50] We end all of this by eliminating the intercarrier compensation regimes altogether, much like the Commission's highly successful *CALLS Order*, which likewise was based on a broad, industry-wide compromise agreement.[51]

The administrative cost savings from eliminating intercarrier payments are likely to be very substantial. For example, analyzing incumbent LECs' ARMIS reports and the entries relating just to billing other carriers for access charges (e.g., creating, sending, processing, and verifying bills, and similar costs), it appears that incumbent LECs as a whole spend some $540 million a year just managing the process of billing and collecting payment from other carriers. If one were to add the costs incurred by CLECs, IXCs, wireless carriers, and other providers, the

---

50 *See, e.g.*, ICF Comments at 3 (carriers spend more today on litigation than research and development); *see also* Mercatus Paper at 14-15.

51 *See, e.g.*, Cox Comments at 10 ("bill-and-keep would eliminate many of today's intercarrier compensation payment disputes"); *Access Charge Reform*, CC Docket No. 92-262, Sixth Report and Order in CC Docket Nos. 92-262 and 94-1, Report and Order in CC Docket No. 99-249, Eleventh Report and Order in CC Docket No. 96-45, 15 FCC Rcd 12962, (2000) ("CALLS Order") ¶ 161 *aff'd in relevant part sub nom. Texas Office of Public Utility Counsel v. F.C.C.*, 265 F.3d 313 (5th Cir. 2001).

industry as a whole probably spends more than $1 billion every year just issuing and processing bills to and from each other. The ICF Plan would eliminate almost all of this cost—and that does not even count the savings from avoiding the massive litigation and other related costs that providers incur today in navigating the intercarrier compensation regime.

### B. Most Consumers Would See Immediate Rate Decreases Under The ICF Plan

The record reflects considerable confusion about the ICF Plan's effect on end-user rates, as some commenters appear to believe that replacing intercarrier access payments with flat-rated end-user rates and increased SLC caps will increase overall consumer rates. In fact, for the majority of consumers, the ICF Plan will result in rate *decreases*. And as noted above, the plan will likely generate even further and broader decreases once the plan's incentives take effect and providers increase their investments in the network and develop more innovative offerings.

Even taking a purely static view of the impact of the ICF Plan on end users' total telephone bills—*i.e.*, assuming that implementation of intercarrier compensation reform does not spur increased competitive pressure on rates—most end users will see lower rates. Indeed, most urban wireline, rural wireline, and wireless consumers would enjoy overall rate decreases. The only consumers who would see rate increases under this static analysis are broadband users who have VoIP (primarily because those consumers would be contributing to the universal service fund for the first time), and the very lowest volume users of wireline and wireless services. However, the projected increases even for this latter category of customers are very small: on the order of about $1.33 per month for low volume rural wireline consumers, and $1.80 per month for low volume urban wireline consumers. And these rate increases would be fleeting in many cases, because many consumers who have low volumes in one month will be medium or even high volume users the next month, and thus would still see rate reductions in some months.

Equally important, all low-income consumers are fully protected under the ICF Plan: SLC increases are waived for Lifeline users, but those users would receive the full benefit of the elimination of intercarrier payments and the effect on toll services, such that Lifeline users would see rate decreases under the ICF Plan.[52]

Of course the real world is not static, and the ICF Plan will facilitate competition, which in turn will intensify pressure on rates. As the Plan is implemented, carriers may well be unable to price their services to take full advantage of the ICF Plan's higher SLC caps.[53] If more intense competition forces carriers to lower their rates, then virtually all consumers will see lower rates under the ICF Plan than they do today.

## IV. THE CRITICISMS OF THE ICF PLAN IN THE RECORD ARE UNFOUNDED

In our initial comments, we addressed the majority of the attacks leveled against the ICF Plan in the opening round, and we will not repeat ourselves here. Rather, we take this opportunity to address a limited number of new arguments or misapprehensions about the network architecture and revenue neutrality of the ICF Plan.

Opponents of the ICF Plan have two things in common: each seeks to advance its own, unique interests at the expense of all others, and none proposes a credible, comprehensive approach to intercarrier relationships—including both interconnection and compensation—that could avoid another decade of regulatory disputes and litigation. The ICF Plan, in contrast, provides just such an approach and represents a consensus among a range of parties with diverse interests. It is simple in its basic concept and can be implemented with straightforward Commission rules rather than state-by-state variants.

---

52 *See* Economists' Statement at 13-14.

53 *See* Economists' Statement at 12.

### A. The ICF's Edge Rules Are Sensible, Appropriately Detailed, and Enjoy Broad Support in the Record

The Plan's Edge rules in particular have drawn support not just from the ICF's own members—which include long distance carriers, ILECs, rural carriers, CLECs, next-generation network providers, and wireless carriers—but also, in principle, from unaffiliated commenters representing a wide variety of industry perspectives.[54]

No other proposal has achieved anything approaching such a broad range of endorsements, and for good reason. Our Edge principles are simple and implemented through clear, precise rules that apply only as a default if carriers do not voluntarily reach agreement on other financial arrangements. These rules mediate only the respective *financial* responsibilities of interconnecting carriers; they do *not* limit the available *physical* points of interconnection, as some commenters suggest. Nor do the rules discriminate for or against any category of carrier. In particular, the asymmetrical compensation structure that is the default arrangement when a Hierarchical carrier (i.e., a non-rural ILEC) interconnects with a Non-Hierarchical carrier (e.g., a CLEC or an IXC), and to which some opponents object, maximizes the likelihood that the carriers will minimize the cost of interconnection and share the burden fairly. Likewise, the Edge rules fully address the concerns raised by some rural carriers.

---

[54] *See, e.g.*, CTIA Comments at 21-29 (uniform interconnection rules are essential); Mpower Comments at 8 ("no reform of intercarrier compensation will function adequately without" a "uniform structure for interconnection which treats all carriers as fairly as possible"); MetroPCS Comments at 19 ("the approach to network interconnection set forth in the ICF Plan makes sense"); NuVox Comments at 3 ("NuVox thus generally supports the ICF's 'Edge' concept"); SureWest Comments at 27; Qwest Comments at 3, 9-11 (setting forth financial and physical connection responsibilities as part of plan); Missouri PSC Comments at 21 ("The majority of the MoPSC also supports the ICF 'edge' concept since it identifies consistent points of network interconnection for the deliver of terminating traffic to similarly situated local exchange carriers").

### 1. The Edge Rules are Simple and Straightforward

Contrary to the claims of some opponents,[55] the principles underlying our Edge rules are clear. Despite the complexity of the existing networks to which the Edge rules—or any other network interconnection rules—must be applied, the application of the ICF Plan to these networks is clearer and more straightforward than any other interconnection rules proposed in the record. The ICF Plan implements the principle that a carrier will bill and collect from its own customers the costs of providing service to them (e.g., transport and switching) within its own network. The Plan then defines as "Edges" the locations where the financial responsibility for delivering traffic passes from one carrier to another if the two carriers do not agree on a different location or approach. The Edge rules, in turn, specify the default allocations of financial responsibility for transporting traffic *between* carriers' networks.

The Plan precisely defines permissible Edges. They are limited to access tandems, end offices (only if they do not subtend non-rural ILEC access tandems), mobile switching centers, points of presence, and trunking media gateways.[56] These are the places within a carrier's network where interconnection with other networks is technically feasible and where it is efficient for that carrier to manage a high volume of traffic bound for, or originating from, end users distributed over a broad geographic area.

Significantly, each Edge is merely a *financial* point of interconnection ("POI")—the point "downstream" from which the originating carrier's further financial responsibility for the traffic it has handed off is first rationalized and minimized (at Steps 4-6) and then eliminated

---

55 *See, e.g.*, Rural Alliance Comments at 116.

56 *See* ICF Comments, Appendix D at 4-7 (collectively, these permissible Edges are defined as "Functional Network Locations").

(at Step 7).[57] Edges need not be *physical* POIs. Carriers remain free to interconnect physically at any location permitted or required by section 251(c)(2)(B), and selecting a physical POI not located at an Edge will not shift any of the *financial* responsibilities of bringing traffic to a carrier's Edge. Thus, each carrier ultimately will have to recover from its own customers (and, in some circumstances, from the universal service mechanisms described in section IV.B.4, below) the costs of transporting and switching traffic within the Edges of its own network. The default Edge rules are designed to encourage carriers to adopt efficient means of transporting traffic between their respective networks, i.e., two-way trunks whenever some traffic flows in each direction between the networks.

#### 2. The Details of the Edge Rules Make Their Operation Simpler, Not More Complex

The Edge rules clearly delineate each carrier's default responsibilities. They define precisely how many Edges each carrier may have in each LATA or equivalent area, where Edges are to be placed, and each carrier's financial responsibility for transporting traffic *between* networks. Edge rules also include, *inter alia*, specific processes for establishing and moving Edges,[58] concrete requirements to allow physical interconnection by a variety of means,[59] and SS7 interconnection requirements.[60]

These specific default rules are necessary; network interconnection "principles," of the type proposed by some of the ICF's opponents, are not enough. As nine years of operating under section 251 have made all too apparent, interconnection negotiations undertaken without

---

57 *See* ICF Comments, Appendix B at 5-6 (explaining transition to bill and keep).

58 *See* ICF Comments, Appendix D at 5.

59 *Id.* at 7-9.

60 *Id.* at 13-16.

clearly explicated default rules often lead to protracted litigation and market chaos.[61] As Metro PCS states,

> MetroPCS urges the Commission to adopt network interconnection requirements that are as detailed as possible. Many prior disputes that arose in interconnection negotiations resulted from impasses related to these particular network interconnection issues. Any "general principles" adopted by the Commission in this area are likely to be subject to conflicting interpretations and to generate litigation . . . . This argues in favor of greater, rather than lesser, specificity. Further, with the demise of pick-and-choose interconnection rights under Section 252(i), the Commission should be mindful that any latitude in interconnection rules will result in requiring competitive carriers to spend significant resources litigating their interconnection rights.[62]

In reforming intercarrier compensation, the Commission's paramount goal should be to adopt default rules that, through appropriate detail and precision, minimize the areas for potential dispute when carriers cannot reach voluntary agreement.

Claims such as Verizon's—that bill-and-keep and the ICF Plan would simply refocus litigation from pricing disputes to technical ones[63]—do not bear scrutiny. In the first place, it does not follow that taking pricing off the table would lead to an increase in non-pricing disputes, and Verizon has offered no tangible evidence that it would.[64] Verizon is similarly wrong that the breadth and detail of our rules would lead to "a host of disputes about the

---

61 There is no merit to Verizon's suggestion that most disputes about interconnection rules "are settled." Verizon Comments at 5. To the contrary, interconnection disputes remain alive and well throughout the United States, sowing regulatory uncertainty and imposing transaction costs.

62 MetroPCS Comments at 20.

63 Verizon Comments at 15.

64 *See id.*

application of those new rules."[65] It is precisely because the Edge rules are comprehensive that their adoption would sharply reduce both pricing and technical disputes.

### 3. The Edge Rules Do Not Discriminate For Or Against Non-Hierarchical Carriers

Depending on their peculiar industry perspectives, some parties argue that the Edge rules unfairly favor IXCs and similarly situated carriers while others argue that the rules discriminate against such carriers. Neither view is valid.

TDS wrongly argues that the ICF Plan would give interexchange carriers "an unfair windfall because the IXCs would realize the benefits and profits of originating their customers' interexchange calls while bearing none of the costs"[66] and therefore would "contribute to the type of regulatory arbitrage that the Commission has sought to avoid in considering intercarrier compensation reform."[67] This argument fundamentally misunderstands the most basic operation of the ICF Plan. TDS's conclusion rests on the assumption that IXCs will continue to charge end-users for exchange access, even though under the ICF Plan end users' local service providers, not IXCs, would provide originating and terminating service to those users. But that is nonsense. Under the ICF Plan, a carrier will be able to charge its customers only for the services *it* actually provides them, *i.e.*, for transportation and switching over its own network.[68] This means that traditional IXCs will provide only long-haul transport—a service that will be both less valuable and less expensive to end-users than today's end-to-end

---

65 *Id.*

66 TDS Comments at 21.

67 *Id.* at 20-21. *See also* Rural Alliance Comments at 58-59.

68 Each carrier will also provide, and be able to charge for, some transportation from the Edges of its own network to the Edges of other carriers' networks. However, the carrier will *not* be able to charge its customers for services provided on another carrier's network by that other carrier.

"long distance" service—and competition would preclude them from getting away with charging for more than the costs of that function. Thus, the Edge rules would not have the effect that TDS claims; IXCs would not get something for nothing.

Nor do the Edge rules discriminate against Non-Hierarchical carriers (e.g., CLECs or CMRS) when those carriers interconnect with Hierarchical carriers (e.g., larger, non-rural ILECs). Some commenters argue that the Edge rules limit CLECs' choice of POIs in contravention of section 251(c)(2)(B).[69] That is wrong. As an initial matter, as noted, the rules are in complete harmony with section 251(c)(2)(B). That provision allows CLECs to choose any technically feasible point within an ILEC's network to interconnect *physically* with the ILEC.[70] The Edge rules, in contrast, address only *financial* POIs.[71] The Edge rules thus are in no way "inconsistent with Section 251(c)(2),"[72] as they would continue to permit CLECs to choose from the full range of technically feasible points within an ILEC's network for *physical* interconnection.[73]

In the same vein, permitting ILECs to establish Edges at each of their Access Tandems is an efficient rule that does not run afoul of the prohibition against requiring CLECs to establish more than one *physical* POI per LATA. If, for example, an ILEC has Edges at two Access Tandems in a LATA—Tandems X and Y—and a CLEC wishes to interconnect physically with the ILEC *only* at Tandem Y, the CLEC may do so but will bear financial

---

69 *See, e.g.*, Time Warner Telecom Comments at 5.

70 47 U.S.C. § 251(c)(2)(B).

71 ICF Comments, Appendix D at 4 n.4.

72 Time Warner Telecom Comments at 5.

73 Likewise, and contrary to Verizon's assertion, Verizon Comments at 32, it does not violate either the Act or the Commission's current rules to permit carriers other than ILECs to establish Edges that are within their own networks instead of the ILEC's.

responsibility for the additional network costs of delivering to Tandem X any of the CLEC's traffic destined for end-users served by an end office subtending Tandem X but not Tandem Y. As Qwest has explained, "[b]ecause it would be generally inefficient to route such calls through two tandem switches, the originating carrier should receive appropriate price signals to deliver them to the tandem serving the relevant end office."[74]

Second, some commenters argue that the Edge rules are unfairly asymmetrical because a Non-Hierarchical network, unless it agrees to split the costs of interstate switched dedicated transport service 50-50 with an interconnecting Hierarchical network,[75] bears financial responsibility for traffic traveling in both directions between the Edges of the two networks. Through this requirement, the Edge rules encourage sensible transport solutions between such carriers, *i.e.*, two-way trunks (which avoid redundant facility deployment) wherever justified by traffic volumes. Contrary to the claims of some opponents,[76] a Non-Hierarchical network suffers no unfairness if the Hierarchical network need "pay its half" only if the Non-Hierarchical network leases transport from Hierarchical network. At bottom, there can be no perfect symmetry in these circumstances because of differences in network architecture, and the ICF's rules are as fair as possible. Rather than adopting an approach under which each Non-Hierarchical carrier would assume full financial responsibility for delivering traffic to each end office within a Hierarchical network,[77] the ICF Plan limits that responsibility to the delivery of traffic to each *access tandem* within the Hierarchical network. At the same time, the Hierarchical network bears an obligation that the Non-Hierarchical network does not: it has the

---

74 Qwest November 5, 2001 Comments at 25.

75 *See* ICF Comments, Appendix D at 10-11.

76 Time Warner Telecom Comments at 5; Rural Alliance Comments at 58-59.

77 Such an approach is commonly known as COBAK, or central-office-bill-and-keep.

financial burden to deliver traffic originated by the Non-Hierarchical carrier to each of its own *end offices* subtending its access tandem. Against this backdrop, it is hardly unfair to restrict the Non-Hierarchical network's 50% discount to circumstances in which it purchases transport from the Hierarchical network. Indeed, this approach produces a substantial cost-savings to carriers that today receive less than a 50% discount on two-way interconnection trunks because they originate more traffic bound for the Hierarchical network than the Hierarchical network sends back in the other direction.[78]

#### 4. The Transiting Rules Do Not Discriminate Against Rural Carriers

Our transiting rules ensure that carriers are compensated for providing transit service when they do not have a customer relationship with either the calling party or the called party.[79] Thus, an IXC that utilizes an RBOC Access Tandem to interconnect indirectly with a rural carrier must compensate the RBOC for any transiting and transport it provides to allow the IXC to reach the rural carrier's Edge.[80] If the rural carrier's Edge is at an Access Tandem that it operates and subtends (by itself or in combination with other carriers), however, an IXC delivering traffic to that Edge need not pay the rural carrier any transit or transport compensation.[81] Contrary to the claims of the Rural Alliance,[82] this result is both logical and

---

78 47 C.F.R. § 51.709(b); *Petition of WorldCom, Inc. Pursuant to Section 252(e)(5) of the Communications Act for Preemption of the Jurisdiction of the Virginia State Corporation Commission Regarding Interconnection Disputes with Verizon Virginia Inc., and for Expedited Arbitration*, CC Docket No. 00-218, Memorandum Opinion and Order, DA 02-1731, 17 FCC Rcd 27039, 27115 (Wir. Comp. Bur. 2002) ¶ 148 ("Virginia Arbitration Order").

79 ICF Comments, Appendix D at 25-31.

80 *Id.*

81 *Id.*

fair. The rural carrier has an end-user customer from whom it can be compensated for the tandem switching and transport to the central office that it provides; an RBOC providing actual transit service does not, since, by definition, neither party to the call is the RBOC's own customer.[83]

### 5. The Edge Rules Are Defaults Only

Some carriers argue that the Edge rules could lead to inefficiencies. For example, Verizon argues that the Edge rules would lead to substantial reconfiguration of existing interconnection arrangements, positing a scenario in which a CLEC and an ILEC currently are mutually advantaged by interconnecting at an ILEC end office. Verizon asserts that, under the Edge rules, the CLEC "would have every incentive to re-route [its] traffic through a tandem,"

---

82 *See* Rural Alliance Comments at 61 (describing IXC interconnection with an RLEC-operated and -subtended Access Tandem as indirect interconnection and bemoaning the absence of transit or transport payments from the IXC to the RLEC in that circumstance).

83 The Rural Alliance's claim that the Edge rules "create[] an arbitrary differentiation between compensated and uncompensated transport within the same [rural carrier] network," Rural Alliance Comments at 114, is also incorrect. All Terminating Transport (i.e., transport from the Meet Point to the rural carrier's Edge) provided by a rural carrier is compensated by the originating carrier under the ICF Plan. ICF Comments, Appendix A at 19-21. The Rural Alliance claims that this "rural carve out" is not enough, however, because it does not cover transport from the rural carrier's Edge at one central office to a different central office that serves the called party. *See* Rural Alliance Comments at 60, 116. The Rural Alliance has suggested this only as a theoretical possibility and has proffered no evidence to suggest that it is an actual problem. Moreover, it reflects a fundamental misreading of the ICF Plan. Nothing in the ICF Plan limits a CRTC to only one Edge if it has other network locations, such as additional end offices, that meet the ICF Plan's functional Edge requirements. In any event, any shortfall in the "rural carve-out" would be made up by other revenues. The ICF Plan contemplates covering rural carriers' intracompany transport costs not only with Terminating Transport revenues, but also with end-user charges (up to the rural carriers' SLC caps) and "Transitional Network Recovery Mechanism" ("TRNM") funds. *See* ICF Comments, Appendix D at 73-75; ICF Comments at 26-28. Moreover, TRNM support is designed specifically to protect the revenues of rural carriers, *see* ICF Comments, Appendix D at 73-75; ICF Comments at 26-27 & n.42, so the Rural Alliance's claim that the most rural of the rural carriers will suffer unfairly under the ICF Plan is simply incorrect. *See* Rural Alliance Comments at 65-67.

even though that would be an inefficient outcome for both the CLEC and the ILEC.[84] Oddly, elsewhere in its comments, Verizon both admonishes the Commission to "ensure that any rules it adopts as 'default' do not become mandatory in practice,"[85] and recognizes that the rules proposed by the ICF are indeed defaults.[86] Verizon is correct that the Edge rules specifically are default rules: They expressly grant carriers complete discretion to negotiate alternative interconnection arrangements.[87] In the situation Verizon describes, the ICF Plan would in fact preserve the ability of both carriers to realize an agreement that preserves the efficiencies of end office interconnection that benefit both parties under the example's status quo.

One of our overriding goals is to minimize any need (or incentives) for network reconfiguration as a result of the Edge rules. Thus, even beyond this discretionary ability to negotiate alternative arrangements, the *default* Edge rules explicitly preserve the ability of carriers interconnected at points beyond the Edge to continue to exchange traffic using these existing arrangements, and neutralize incentives the carriers might otherwise have to reconfigure them.[88] Therefore, concerns that the Edge rules could somehow "force" carriers into inefficient outcomes are either illogical or disingenuous.

---

84 *See* Verizon Comments at 32.

85 *Id.* at 19.

86 *Id.* at 24.

87 ICF Comments, Appendix D at 2.

88 *See* ICF Comments, Appendix D at 12 (ICF Plan Section II.A.3.c.(2), "Facilities Beyond the Tandem").

### 6. As Applied to Centralized Equal Access Providers, the Edge Rules Are Clear

Several parties commented on the ICF Plan's provisions as applied to centralized equal access ("CEA") systems.[89] Generally, these entities extol the benefits of CEA arrangements.[90] They note some of these arrangements have been in place for nearly twenty years. These arrangements provided several benefits to rural carriers. While their primary role was to enable rural carriers to provide equal access to interexchange carriers, CEAs often provided fiber transport connectivity and fiber rings to rural areas particularly where the dominant LEC was not willing to upgrade its transmission facilities to the rural carriers.

These parties express concern that the ICF Plan will penalize rural carriers for using centralized equal access tandems by discriminating against both the rural carriers and the CEA operator. They are mistaken. The ICF Plan expressly give rural carriers the opportunity to decide where to establish their network edges. They may establish an edge in each contiguous portion of their serving areas so long as they are able to provide the required edge functionality at that location or they may establish their edge at their access tandem.

Some rural carriers have elected not to install equal access functionality in their end office switches and to procure this functionality from a CEA tandem provider. We believe CEA tandem providers today recover their costs of providing access by billing the IXCs that *must* connect through them because the CEA tandems provide the equal access functionality essential for interconnection.[91] The ICF Plan does not require changes to be made to these CEA

---

89 *See* Iowa Utilities Board Comments at 4-5; South Dakota PUC Comments at 6-7; Interstate Telecom Consulting Comments at 26; Rural Alliance Comments; Centralized Equal Access Providers Comments at 8-9.

90 Rural Iowa Indep. Tel. Assn. Comments at 16; Iowa Telecom Assn. Comments at 7.

91 *See* ICF Comments, Appendix D at 19.

network arrangements. What changes is how the CEA tandem provider is compensated. Under the ICF Plan, a CEA tandem must be designated as the edge for the non-equal access CRTC end offices it serves because those end offices cannot offer interconnection for all types of traffic, which is one of the fundamental criteria that must be met to serve as an edge.[92] Moreover, the ICF Plan allows carriers to fulfill their interconnection obligations through either direct or indirect (transit) interconnection arrangements and the carrier that has the financial obligation for transport decides how it will interconnect with other carriers. By requiring CEA tandems to be designated as edges for the non-equal access CRTC end offices, the ICF Plan ensure that interconnecting carriers are not forced to pay carrier compensation charges for transit functions that cannot be avoided because direct interconnection with the rural carrier end office is not available.

A variety of carrier compensation mechanisms will be available to the CEA tandem provider under the ICF Plan. A CEA tandem provider can apply a terminating transport charge to carriers that use its transport between the meet point between that carrier and the CEA provider and the CEA tandem location to send traffic destined for the non-equal access end offices the CEA serves.[93] The CEA tandem provider can bill the rural carrier for the tandem switching and transport services it provides to the non-equal access end offices. A CEA tandem provider may also collect transit charges from non-CRTC and CRTC carriers that elect to use it to indirectly interconnect with the other carriers it may serve, so long as those other carriers have not designated the CEA tandem as their edge.[94]

---

92 *See* ICF Comments, Appendix D at 4, 6.

93 *See* ICF Comments, Appendix D at 37.

94 Those other carriers must provide interconnection at their edge under the functional edge requirements.

Several commenters assert that this will leave the rural carrier with no way to recover its costs, including any charges it must pay to the CEA. Again, they are mistaken. The ICF Plan specifically addresses cost recovery in this circumstance. The ICF Plan would allow rural carriers to include these CEA tandem provider tandem switching and transport charges as expenses that are eligible for recovery through the new SLCs, and universal service support.[95]

### B. The ICF Plan Provides ILECs With An Opportunity To Achieve Revenue Neutrality, But No Entitlement To Do So

Various parties have suggested that the loss of intercarrier compensation revenues should simply be absorbed by the respective carriers without affording those carriers any alternative means of recovering those revenue streams.[96] These commenters oppose the ICF Plan because, they suggest, (i) it guarantees ILECs the same level of revenues they receive today, and (ii) those revenues are much higher, on an enterprise-wide basis, than the ILECs are entitled to receive. Neither prong of this argument has merit. The ICF Plan gives ILECs only an opportunity, not an entitlement, to maintain revenue levels, and the record is bereft of evidence that this Commission and its state counterparts have somehow permitted ILECs to reap unreasonable profits on their overall investment.

Although the ICF Plan provides an *opportunity* for carriers to recover the network costs that they now collect through intercarrier payments, it is not remotely a "make whole" scheme for ILECs. In particular, it offers no guarantee that ILECs will be able to maintain

---

95 A CRTC may not charge CRTC terminating transport for the transport from its edge at the CEA to the CRTC's end office inasmuch as that is not transport to the CRTC's edge. *See* ICF Comments, Appendix D at 37. For tandems established after the start of the Plan that are outside the rural carrier's contiguous service area, those tandems and associated transport will be treated as an unregulated activity and will not be eligible either for SLC, access or USF recovery. ICF Comments, Appendix D at 58.

96 *See, e.g.*, NASUCA Comments at 28.

current revenue levels in the face of growing competition. Instead, the Plan merely stabilizes universal service support mechanisms and relaxes regulatory impediments (in the form of SLC caps) to carriers' recovery of their network costs.[97] In many markets, growing competition—from CLECs, wireless carriers, cable companies, and VoIP providers, among others—may preclude ILECs from even approaching the revenue represented by the increased SLC caps, and those ILECs may well end up financially worse off than they are today. This is true even if the nominal SLC increases to the cap, but ILECs are forced by competition to reduce bundle price packages or the intrastate rates. What the customer pays—and the ILEC collects—is the total.

Indeed, Verizon opposes the ICF Plan precisely *because* the Plan shifts each ILEC's cost-recovery efforts from other carriers to the ILEC's own end users, because it thereby exposes those cost-recovery efforts to "competitive market conditions" rather than regulatory rate-setting, and because those competitive conditions "will sharply limit many carriers' ability to recover revenues through increases in end-user charges."[98] In this respect as well, the ICF Plan steers a reasonable middle course between those commenters that oppose the Plan on the theory that it improperly favors ILECs (because it provides an opportunity for revenue neutrality) and those that oppose the Plan on the theory that it improperly *disfavors* ILECs (because it does *not* guarantee revenue neutrality in result).

---

97 The SLC increases permitted under the Plan would, in some cases, be lower than those envisioned by NARUC. As NARUC explains, its plan "does not ensure revenue neutrality, but it does aim to give carriers maximum flexibility in recovering lost intercarrier access revenues consistent with consumer protection. Carriers are only given the opportunity to recoup their intercarrier compensation losses through increased SLCs, if they so choose, but the maximum permissible SLC increase is used as an offset to ACTF support." Ex Parte of the National Association of Regulatory Utility Commissioners, at 10, filed in CC Docket No. 01-92 (May 18, 2005), App. C at 10 ("NARUC Task Force Draft Version 7").

98 Verizon Comments at 4-5.

These proposals further demonstrate a fundamental misunderstanding of both the manner in which local rates have been set and the nature of competitive markets. As the Commission has acknowledged, local rates have traditionally been set below cost and subsidized through the use of high access charges.[99] It is simply unrealistic to assume that these sizable indirect subsidies can be eliminated without providing carriers the opportunity to replace these revenues through other sources.

The suggestion that intercarrier compensation revenues be reduced or eliminated, but that end user rates should not be permitted to increase, is simply another way of imposing price controls on telecommunications service. As history has repeatedly demonstrated, however, price controls have an immediate and adverse effect on any market economy. If end user prices for incumbent LECs are artificially low, competition from new entrants is suppressed and an incumbent's incentives and ability to invest, bring new services to market, and offer superior service quality are reduced. While some rural ILECs argue that they are acting in the interest of consumers by maintaining these artificially low end user rates, the reality is that these rural ILECs are simply attempting to protect themselves from competition by preserving a system that creates artificially low end user rates yet makes up the difference, in part, from charges on other carriers (and, in turn, their customers) through the access charge regime. Requiring greater recovery of costs directly from end users instead of intercarrier charges will not cause consumers to give up telephone service. Rather, the outcome will be broader local calling areas and increased interest by competitors in serving a broader array of customers, *e.g.*, low usage customers that today are not as attractive to new entrants.

---

[99] Further Notice n. 20.

To the extent various carriers object to the ICF Plan provisions that permit rate-of-return rural ILECs to maintain existing revenue streams, these claims are overstated. First, just as it does with price cap carriers, the ICF Plan would provide rate-of-return carriers with new universal service support computed "as if" the carrier recovered the maximum permissible amount from end users based on the SLC caps contained in the ICF Plan.[100] Second, commenters objecting on this basis implicitly presume that rate-of-return carriers are not being appropriately monitored and that the rate-of-return they are receiving is in fact much higher than is appropriate. Thus, these criticisms are not of the ICF Plan, but of rate-of-return regulation itself. The Commission need not resolve this issue to adopt the ICF Plan, and the ICF has not examined this issue. If the Commission at some future date were to modify its rules governing rate of return regulation, the revenue stream permitted by the successor rules would readily fit within the ICF Plan's rate structure and universal service provisions. Once again, we find ourselves between two extremes: on the one hand are commenters calling for a complete restructuring of all telecommunications funding and on the other are commenters calling for minor changes to existing rules. The ICF Plan provides a reasonable middle ground.

Finally, even if the Plan did guarantee revenue neutrality in result, that would be unobjectionable unless the Plan's opponents cited evidence that today's revenue levels are unjust and unreasonable, despite the best efforts of federal and state regulators to preclude that result. But the opponents have cited no such evidence. Indeed, ARMIS data, which are generally reliable in identifying a carrier's overall return on regulated enterprise-wide investment, reveal that the regulated enterprise-wide rates of return for the BOCs have been declining in recent

---

[100] ICF Comments, Appendix D, at 56 (describing revenue recovery for rate-of-return ILECs).

years,[101] just as one would expect in any increasingly competitive environment. The Commission should err on the side of ensuring just compensation to carriers of last resort. Any risk of *over*compensation would be mitigated by the market's tendency to stimulate even greater competitive entry in the face of high prices and thereby lower those prices closer to cost. In contrast, no market check would be available to mitigate regulatory errors that result in *under*compensation, and the result would be not just underinvestment in the network facilities used to serve the ILECs' current customers, but also artificial barriers to competitive entry.

## V. THE COMMISSION HAS AMPLE AUTHORITY UNDER EXISTING LAW TO IMPLEMENT THE ICF PLAN IN ITS ENTIRETY

We have shown in prior submissions that the Commission possesses the jurisdictional and substantive authority necessary to implement the ICF Plan. Specifically, in our October and May filings, we demonstrated that the Commission may (1) adopt a comprehensive intercarrier compensation scheme, pursuant to section 251(b)(5), that extends to all categories of traffic; (2) mandate a reform plan based on bill-and-keep principles; and (3) implement the universal service, network interconnection, transit, and other aspects of the ICF Plan.

In this section, we respond directly to some commenters' recent criticisms to various narrow parts of our legal analysis, particularly the scope of the Commission's authority under section 251(b)(5) and its ability to mandate an intercarrier compensation regime based on

---

[101] Data reported by all of the BOCs in FCC ARMIS 43-01 show that the BOCs' combined interstate and intrastate rate of return moved from approximately 16% in 1999 to 13% in 2004. This data is available at www.fcc.gov/wcb/armis. Column [h], row 1920, reports each carrier's total interstate rate of return. Although an intrastate rate of return is not displayed on the report, it—along with the combined interstate-intrastate rate of return—can be calculated by applying the same methodology that is used in ARMIS for calculating the reported interstate rate of return. (First, the net return is obtained by adding rows 1090 and 1290, and subtracting rows 1190, 1390, 1490, and 1590. Then the rate of return is obtained by dividing net return by average net investment, row 1910). *See id.* (instructions).

bill-and-keep principles. As discussed below, these criticisms are without merit and should be rejected.

### A. The Commission May Establish Uniform Compensation Arrangements for all Categories of Traffic

As the Commission has previously recognized, its jurisdiction to establish default intercarrier compensation arrangements under section 251(b)(5) extends to all categories of telecommunications traffic, including exchange access traffic. Section 201(b) of the Communications Act empowers the Commission to "prescribe such rules and regulations as may be necessary in the public interest to carry out the provisions of this Act." The Supreme Court in *Iowa Utilities Board* confirmed that this section grants the Commission jurisdiction to adopt rules implementing all provisions of the Act, including provisions, such as section 251(b)(5), involving subjects that, prior to the 1996 amendments, were subject to the exclusive jurisdiction of the states.[102] This broad grant of rulemaking authority permits the Commission to implement all aspects of our comprehensive reform proposal.

Section 251(b)(5) by its terms gives the Commission jurisdiction over all compensation issues relating to the transport and termination of "telecommunications" involving a local exchange carrier. Because the statutory definition of "telecommunications" does not limit its scope to a particular jurisdictional or service category, the Commission's rulemaking authority, under sections 201(b) and 251(b)(5), includes all interstate and intrastate traffic.[103] In addition, the Commission has made clear that section 251(b)(5) is not limited to traffic between two local exchange carriers. Rather, that provision encompasses all traffic that involves an

---

[102] *See Iowa Utils. Bd.*, 525 U.S. at 378-81.

[103] *See ISP Recip. Comp. Remand Order* at 9167, 9172 (¶¶ 34, 45).

exchange carrier at one end.[104] The Commission has also determined that section 251(b)(5) authorizes the Commission to adopt rules applicable to originating as well as terminating traffic.[105]

Section 251(g) reinforces the conclusion that section 251(b)(5) encompasses all categories of traffic, including exchange access traffic. That provision temporarily grandfathers the pre-1996 Act rules applicable to exchange access traffic, including rules governing "receipt of compensation." There would have been no need for Congress to preserve those compensation rules against the effects of section 251 if section 251(b)(5) did not address the "receipt of compensation" for traffic covered by section 251(g), *i.e.*, access traffic.

Despite section 251(b)(5)'s unambiguous reference to all "telecommunications," commenters continue to insist that the Commission's jurisdiction to implement that provision extends only to some categories of traffic and not to others. The Rural Alliance and NARUC, for example, argue that section 251(b)(5) does not apply to exchange access traffic, generally, and intrastate access traffic in particular.[106] Verizon and BellSouth similarly contend that the agency's jurisdiction under section 251(b)(5) is limited.[107] Verizon asserts that the statutory provision applies only to "traffic that originates on the network facilities of one local exchange carrier and terminates on the network facilities of an interconnecting local exchange carrier within the same local calling area."[108] BellSouth suggests that section 251(b)(5) deals only with

---

104 *See Local Competition Order* at 16016 (¶ 1041).

105 *See id.* (¶ 1042).

106 *See* Rural Alliance Comments at 146.

107 *See* Verizon Comments at 40-42; BellSouth Comments at n.66. Verizon and BellSouth assert, based on different jurisdictional arguments, that the Commission has authority under the Act to adopt a comprehensive plan for reforming intercarrier compensation.

108 Verizon Comments at 40.

local traffic, arguing that "[s]ection 251(b)(5) and the implementing rules have nothing to do with exchange access…."[109]

As we previously have shown, these attempts to truncate the scope of the Commission's authority under section 251(b)(5) contradict the plain text of the statute and prior Commission and judicial decisions. These commenters essentially ignore the fact that Section 251(b)(5) contains no language that limits its scope in the ways they suggest. To the contrary, Congress drafted that provision broadly to address all "telecommunications," the most sweeping of the statute's defined terms.[110]

Moreover, the Commission explicitly rejected these narrow readings of its section 251(b)(5) jurisdiction in the *ISP Recip. Comp. Remand Order*. The Commission there properly concluded that "[w]e were mistaken [in the *Local Competition Order*] to have characterized" section 251(b)(5) as limited to local traffic, given that "'local' … is not a term used in section 251(b)(5) or section 251(g)."[111] The D.C. Circuit did not take issue with this conclusion, although it remanded other aspects of the *ISP Recip. Comp. Remand Order*.[112]

---

109 BellSouth Comments at n. 66. BellSouth claims that section 251(g) gives the FCC jurisdiction over exchange access. *Id.* at 43. The Supreme Court, however, concluded in *Iowa Utilities Board* that section 251(g) did not grant any additional authority to the Commission. *See Iowa Utils. Bd.,* 525 U.S. at 381 n.8. Further, the D.C. Circuit has characterized that section as "a transitional device, preserving various LEC duties that antedated the 1996 Act until such time as the Commission should adopt new rules pursuant to the Act." *See WorldCom, Inc. v. FCC,* 288 F.3d 429, 430 (D.C. Cir. 2002).

110 The Rural Alliance raises various arguments based on legislative history to support its view that "telecommunications" does not mean "telecommunications," but short of absurdity the statutory definition of that term must control. *See A.C.L.U. v. F.C.C.,* 823 F.2d 1554, 1568-70 (D.C. Cir. 1987).

111 *See ISP Recip. Comp. Remand Order* at 9167, 9172 (¶¶ 34, 45).

112 *See WorldCom, Inc. v. FCC,* 288 F.3d at 433-34.

Indeed, in an analogous context, the D.C. Circuit recently rejected the Commission's contrived attempt to narrow the reach of "telecommunications."[113] The case involved the review of a Commission order concluding that long distance services were not "telecommunications" for purposes of section 252(d)(2). The court held that "[e]ven under the deferential *Chevron* standard of review, an agency cannot, absent strong structural or contextual evidence, exclude from coverage certain items that clearly fall within the plain meaning of a statutory term."[114] The Commission is likewise precluded in this case from ruling that section 251(b)(5) does not include all telecommunications because the broad statutory definition of "telecommunications" bars such a conclusion.[115]

BellSouth contends that it would not have been necessary for Congress to adopt section 251(g) if section 251(b)(5) encompassed exchange access traffic.[116] According to BellSouth, if section 251(b)(5) covered exchange access, the rules adopted by the Commission to

---

113 *USTA v. FCC*, 359 F.3d 554, 592 (D.C. Cir. 2004).

114 *Id.*

115 NARUC's assertion that section 601 of the 1996 amendments bars the FCC from asserting jurisdiction over intrastate exchange access traffic is meritless. According to NARUC, that section prohibits the FCC from exercising such jurisdiction unless the statute expressly grants authority over intrastate access. This is essentially the same argument that NARUC raised and the Supreme Court squarely rejected in the *Iowa Utilities Board* decision. NARUC there argued that the phrase "nothing in this Act shall be construed to apply…" to intrastate communications in section 152(b) of the Act precluded the Commission from exercising jurisdiction under section 251 over intrastate communications because that section does not contain an explicit reference to intrastate communications. The Supreme Court, however, held that the NARUC argument "ignores the fact that § 201(b) *explicitly* gives the FCC jurisdiction to make rules governing matters to which the 1996 Act applies." *Iowa Utils. Bd.*, 525 U.S. at 380 (emphasis in original). As shown above, section 251(b)(5) gives the FCC jurisdiction over intercarrier compensation arrangements involving all types of traffic, including intrastate exchange access. Together with the rulemaking authority granted in section 201(b), these provisions provide the Commission with express authority to adopt the rules we have proposed.

116 *See* BellSouth Comments at n. 66.

implement that section "would have obviated the need to preserve existing exchange access arrangements." Congress, however, recognized that reform of the complex existing system of interstate and intrastate access charges, and the inextricably related universal service mechanisms, could not be accomplished overnight without serious risk of severe consumer disruption. Congress, consequently, adopted section 251(g) precisely to permit the Commission to adopt initial rules implementing section 251(b)(5) within six months after enactment of the 1996 statutory amendments while preserving the existing system of access charges until the agency could undertake more comprehensive reform of intercarrier compensation.[117]

In a related vein, NARUC contends that section 251(g) applies only to interstate access traffic.[118] That section, however, preserves pre-existing access and other obligations that were imposed by court order, consent decree or Commission requirement. The equal access and non-discrimination access obligations that were imposed on the BOCs by the *AT&T Consent Decree* extended to intrastate as well as interstate services.[119] NARUC's claim that section 251(g) applies only to interstate services, thus, is simply wrong.

Time Warner Telecom also seeks to restrict the scope of the Commission's section 251(b)(5) authority by arguing that the statutory language is limited to "transport and termination" of telecommunications and, thus, does not extend to origination compensation.[120] As noted above, the Commission correctly rejected this reading of the statute in the *Local Competition Order*. The Commission concluded that Congress limited the compensation

---

117 Similarly, Congress did not require the Commission to complete its reform of interstate and intrastate universal service with the adoption of its initial order in 1997. *See TOPUC v. FCC*, 183 F.3d 393 (5th Cir. 1999).

118 *See* NARUC Comments at 9.

119 *See United States v. AT&T*, 552 F. Supp. 131, 232-3 (D.D.C. 1982), *aff'd sub nom. Maryland v. United States*, 460 U.S. 1001 (1983).

120 *See* Time Warner Telecom Comments at 17.

arrangements authorized under section 251(b)(5) to the termination of traffic and, thus, had chosen not to authorize charges for originating traffic. Through section 251(g), Congress allowed pre-1996 Act compensation arrangements to remain in place until specifically superseded by the Commission by the exercise of its section 251(b)(5) authority.

Finally, Time Warner Telecom speculates that even if the Commission may adopt a comprehensive intercarrier compensation reform plan, eligible incumbent LECs can opt out of the plan under section 251(f)(2). That section permits an incumbent LEC with fewer than two percent of the nation's total subscriber lines to petition a state commission to suspend the application of section 251(b) and (c) to the requesting carrier. To obtain that relief, the carrier must demonstrate that suspension is necessary to avoid "a significant adverse impact on users of telecommunications services generally," or to avoid "an unduly economically burdensome" or "technically infeasible" requirement and is in the "public interest."

Time Warner Telecom's speculation does not provide a reason for the Commission not to adopt the ICF Plan. Time Warner Telecom makes no attempt to show how the obligations created by the ICF Plan would cause a "significant adverse impact" or impose an "unduly economically burdensome" requirement. Indeed, as explained in the opening comments, the ICF Plan includes a variety of measures that are expressly designed to ameliorate any perceived adverse effects on eligible rural carriers.

If a carrier were permitted to opt out of a Commission-mandated intercarrier compensation regime, however, the Commission would then need to consider the consequences of that result. The ICF Plan, for example, is an integrated proposal for comprehensive reform of the existing intercarrier compensation, universal service and interconnection regimes. In view of the interdependence of the various components of the Plan, it would be reasonable for the

Commission to conclude that a carrier which opted out of the intercarrier compensation provisions, pursuant to section 251(f)(2), would not be eligible to participate in other aspects of the overall scheme, such as the reformed federal universal service scheme.

### B. The Commission May Impose a Default Intercarrier Compensation Regime Based on Bill-and-Keep Principles for all Traffic Subject to Section 251(b)(5)

We showed in our opening comments that the Commission possesses the authority to prescribe a transition to a bill-and-keep regime as the substantive compensation rule, even for "unbalanced" traffic. Specifically, we demonstrated that section 252(d)(2) explicitly gives the Commission the discretion to adopt a bill-and-keep regime for all traffic subject to section 251(b)(5).

Time Warner Telecom and the Rural Alliance each object to this interpretation of the Commission's statutory authority, based on very different readings of section 252(d)(2). Time Warner Telecom claims that section 252(d)(2)(A)(i) bars the Commission from imposing a bill-and-keep regime, unless the traffic is balanced. It asserts that a compensation system that recovers termination costs from end users and universal service does not "provide for the mutual and reciprocal recovery by each carrier of costs associated with the transport and termination on each carrier's network facilities of calls that originate on the network facilities of the other carrier." 47 U.S.C. § 252(d)(2)(A)(i). According to Time Warner Telecom, the statute's use of the terms "mutual" and "reciprocal" means "that one carrier must compensate the other for the costs imposed on its network and *vice versa*, not that one carrier may be compensated for its costs from a third party."[121] Time Warner Telecom also urges the Commission to treat as dicta

---

[121] *See* Time Warner Telecom Comments at 20.

the D.C. Circuit's statement that there is a "non-trivial likelihood that the Commission has authority to elect" a bill-and-keep regime for section 251(b)(5) traffic."[122]

The erroneous premise of Time Warner Telecom's argument is that Section 252(d)(2) in some way mandates that the Commission select CPNP compensation arrangements for certain categories of section 251(b)(5) traffic. That is simply not correct. As we explained in our initial comments, section 252(d)(2) directs the Commission to choose *either* "arrangement[s] that waive mutual recovery of costs (such as bill-and-keep arrangements)," provided carriers have an opportunity to recover their costs from end users (and, where appropriate, universal service support) *or* a genuinely cost-based CPNP regime. The statute in no way precludes the Commission from selecting a bill-and-keep regime for all section 251(b)(5) traffic if it determines that it is superior to a CPNP scheme.[123]

Moreover, there is no plausible basis for Time Warner Telecom's claim that the statutory phrase "mutual and reciprocal recovery by each carrier of costs" must be interpreted to require payments by one carrier to another. The term "mutual" in this context simply means that each carrier exchanging traffic must have an opportunity to recover its costs; mutual does not mean that recovery must be from another carrier. The term "reciprocal" means that each carrier must be given the opportunity to recover its termination costs in the same manner. This statutory language, for example, would bar a scheme under which incumbent LECs were directed to recover their termination costs from other carriers while competitive LECs were required to recover their costs from their end users. In that circumstance, the end user customers of the

---

122 *See WorldCom*, 288 F.3d at 434.

123 This reading of section 252(d)(2) is also consistent with the legislative history, which describes that section as authorizing "a range of compensation schemes, such as an in-kind exchange of traffic without cash payment (known as bill-and-keep arrangements)." S. Rep. No. 104-230, at 120 (1996).

competitive LECs would end up paying for both the cost of terminating traffic on their network as well as traffic that they send to incumbent LECs for termination. Thus, the Commission should reject Time Warner Telecom's attempt to insert limits on the exercise of the Commission's discretion under section 252(d)(2) that Congress plainly did not impose.

Time Warner Telecom's contention that the Commission is only authorized to mandate bill and keep where traffic is balanced appears to be based on a mistaken reading of the bill and keep savings clause, section 252(d)(2)(B)(i). Time Warner Telecom asserts that compensation arrangements under section 252(d)(2) must afford the "mutual" recovery of costs. But the savings clause explicitly authorizes the Commission to adopt "arrangements that waive mutual recovery" of carrier costs. Thus, Time Warner Telecom's nonsensical argument must be that the Commission may prescribe as a default intercarrier compensation regime "arrangements that waive mutual recovery (such as bill-and-keep arrangements)" only if those arrangements afford carriers "the mutual recovery of costs."[124] The Rural Alliance offers a similarly illogical interpretation of section 252(d)(2)(B)(i). It claims that "Congress specifically added a reference in the Act to 'bill-and-keep arrangements' as examples of 'arrangements that *waive* mutual recovery' in an effort to highlight that bill-and-keep arrangements are inconsistent with mutual cost recovery."[125]

The Commission may reasonably conclude that Congress intended for this savings clause to make sense and, accordingly, that it may and should resolve any ambiguity in the statutory language in a manner that preserves its discretion to select either a bill-and-keep or cost-based CPNP scheme for section 251(b)(5) traffic. As the Supreme Court observed in the *Iowa Utilities Board* decision, Congress "is well aware the ambiguities it chooses to produce in a

---

[124] 47 U.S.C. § 252(d)(2)(B)(i).

[125] Rural Alliance Comments at 63 (emphasis in original).

statute will be resolved by the implementing agency."[126] On judicial review, the Commission would be entitled to *Chevron* deference in defending its reasonable interpretation of section 252(d)(2).

Moreover, as noted, the D.C. Circuit has already held that section 252(d)(2) authorizes the Commission to adopt a bill-and-keep regime for section 251(b)(5) traffic.[127] Contrary to Time Warner Telecom's characterization, that statement was not dictum, as the court clearly relied on this finding when it remanded the *ISP Remand Order* without vacating the Commission's rules.

Time Warner Telecom also erroneously alleges that the Commission may not mandate bill-and-keep as the default compensation regime, because it requires the Commission to specify a particular reciprocal compensation rate, namely zero, and section 252(d)(2) only authorizes state commissions to prescribe such rates.[128] This argument mischaracterizes the scope of the Commission's authority under that statutory provision.

The Supreme Court held in *Iowa Utilities Board* that the Commission has broad authority to specify the methodology from a "range of compensation schemes" to be used in implementing section 251. Bill and keep is a methodology, not a "rate," just as CPNP is a methodology. The bill and keep methodology requires carriers to recover their termination costs from their end users, whereas the CPNP methodology requires carriers to recover termination costs from another carrier. The end user recovery approach does not amount to a rate prescription simply because the charge to a carrier under that scheme is zero.

---

126 *Iowa Utils. Bd.*, 525 U.S. at 397.

127 *See WorldCom*, 288 F.3d at 434.

128 Time Warner Telecom does not explain why it is permissible under its reading of section 252(d)(2) for the Commission to prescribe a rate of zero when traffic is balanced.

### C. The Commission Has Authority to Adopt the Transit Service Provisions of the ICF Plan

As we explained in our initial comments, the Commission has authority to regulate the provision of transit and to prescribe rates for transit, pursuant to sections 201(a) and 251(a) of the Act. Transit refers to transport service that LECs provide to carry traffic from one carrier's network to another carrier's network. Section 201 grants the Commission explicit jurisdiction over interstate transit traffic. Section 251(a), which requires all telecommunications carriers to "interconnect directly or indirectly" with all other telecommunications carrier networks, expands the Commission's jurisdiction to include *all* transit traffic, including intrastate traffic. The Commission previously has stressed the vital role that section 251(a) plays in ensuring that carriers that do not exchange significant amounts of traffic are able to interconnect efficiently through *indirect* arrangements, *i.e.*, through a transit service that connects the two carriers to one another.[129] Indeed, transit is the essential link that enables the two carriers to interconnect indirectly.

BellSouth, however, contends that section 251(a) should be read much more narrowly. It asserts that this provision does no more than prohibit a carrier "from insisting upon direct connection" with another carrier.[130] The Commission, in contrast, has characterized that section as "central to the 1996 Act"[131] and has stated that its "fundamental purpose" is to "promot[e] the interconnection of all telecommunications networks by ensuring that incumbent

---

129 *See Local Competition Order* at 15991 (¶ 997).

130 *See* BellSouth Comments at 34.

131 *See Local Competition Order* at 15991 (¶ 997).

LECs are not the only carriers that are able to interconnect efficiently with other carriers."[132] That statutory objective would be frustrated if the Commission were powerless to regulate a carrier's provision of the transit link needed to interconnect two carriers indirectly. By eviscerating the right of a carrier to rely on indirect interconnection arrangements, BellSouth's view of section 251(a) would erect a formidable barrier to entry by requiring smaller carriers to incur the cost of direct connections to other carriers where it is plainly economically inefficient to do so. That is precisely the outcome that Congress sought to avoid by enacting section 251(a).

### D. The Commission Should Not Refer the ICF Plan to a Federal-State Joint Board

We explained in our initial comments that the Commission is not required by section 254(a) of the Act to refer the universal service aspects of the ICF Plan to a Federal-State Board prior to adopting the Plan. The Fifth Circuit has expressly held that section 254(a) only obligated the Commission to refer the initial implementation of section 254.[133]

The Rural Alliance advances three reasons why the Commission nonetheless should refer the ICF Plan to a Joint Board.[134] First, it contends that a Joint Board referral is needed to assess the relationship between intercarrier compensation reform and universal service. Second, it alleges that a Joint Board referral is required to determine the impact of the changes to intercarrier compensation on the existing separations rules. Third, the Rural Alliance asserts that referral to a Joint Board is necessary because the ICF Plan would supplant the existing systems

---

132 *See Deployment of Wireline Services Offering Advanced Telecommunications Capability*, CC Docket No. 98-147, Fourth Report and Order, 16 FCC Rcd 15435, 15478 (¶84) (2001), *aff'd sub nom. Verizon Telephone Cos. v. FCC*, 292 F.3d 903 (D.C. Cir. 2002).

133 *Texas Office of Public Utility Counsel v. F.C.C.*, 265 F.3d 313, 328 n.7 (5th Cir. 2001).

134 Rural Alliance Comments at 153-56.

of intrastate access charges. None of these arguments establishes a credible basis for mandatory referral of the ICF to a Joint Board.

The Act requires the Commission to refer a matter to a Federal-State Joint Board only in very limited circumstances. Section 410(c) mandates such a referral when the Commission proposes changes to the rules that govern the allocation of costs between the interstate and intrastate jurisdictions.[135] The ICF Plan, however, does not propose any changes to the separations rules and, consequently, does not trigger a mandatory referral.[136]

As already noted with regard to the express holding of the Fifth Circuit, the Commission need not refer the matter to the Joint Board to recommend changes to the federal universal service rules. Similarly, the Commission's exercise of its authority under section 251(b)(5) to supersede existing intrastate access charge rules does not require a prior referral to a Joint Board.

Although section 410(c) permits the Commission in the exercise of its discretion to refer virtually any common carrier issue to a Joint Board, the public cannot afford the time that would take in this case. We and other commenters explained in detail in the opening comments the crisis that currently afflicts the existing patchwork of intercarrier compensation arrangements. It is imperative that the Commission act as expeditiously as possible to resolve this crisis. A delay of many months (or, more realistically, years) as the result of referral plainly would be contrary to the public interest.

---

135 *See* 47 U.S.C. § 410(c).

136 In the event that the Commission, after it reforms intercarrier compensation, determines that changes to the separations rules would be desirable, those issues would be referred to a Joint Board in the first instance.

## VI. NONE OF THE NEW OR REVISED PLANS SUBMITTED AFTER THE COMMISSION RELEASED ITS FURTHER NOTICE WOULD SERVE THE PUBLIC INTEREST

The Commission faces no shortage of opinions or proposals in this proceeding and, indeed, received a substantial number of proposals for reform—some purporting to be complete, and some addressing only a few issues—after it released its Notice. Like those on which the Commission explicitly sought comment in the Further Notice, however, these new or revised proposals fail to reflect a comprehensive, balanced, neutral approach to reform that would serve the public interest. Rather, each continues to reflect the parochial and short-sighted interests of its respective proponent. Further, none other than the ICF Plan would bridge the transition to the IP networks of the future in a pro-competitive, deregulatory manner, and none better addresses the concerns of rural carriers and their customers.

### A. The NARUC Task Force Process Is Commendable, but Version 7 of the Task Force Proposal Retains Serious Shortcomings

We commend and will continue to work with the NARUC Intercarrier Compensation Task Force on its efforts to develop a comprehensive reform proposal. The Task Force, now revising Version 7 of its draft proposal, is considering many of the same issues we explored in developing our own Plan. As the Task Force process has proceeded, it has increasingly provided independent validation of our work, as the Task Force proposal has increasingly come closer to ours. Specifically, the Task Force draft currently (1) adopts our network interconnection rules; (2) recognizes that legacy compensation systems should not be applied to IP-IP traffic; (3) provides a continuing revenue stream based on terminating transport services provided by CRTCs; (4) recognizes the need for reform of the universal service contribution mechanism, including basing contributions on some combination of connections, bandwidth, and telephone numbers; (5) recognizes that increased subscriber line charges should

offset reductions in LEC intercarrier revenues;[137] and (6) offers support for the elimination of origination charges; and (7) establishes a new universal service mechanism to provide, where appropriate, for recovery of access charges lost to reform. All of these are features of the ICF Plan.

While the Task Force, to its credit, has sought input from a wide array of perspectives, we believe its proposal still lacks the unqualified support of any participant in the Task Force's process. The Task Force has received input from multiple parties but has not been able to achieve an optimal solution to the multi-dimensional tradeoffs involved. As a result, the Task Force Draft contains several fatal flaws that prevent it from achieving the Commission's reform goals.

*First*, and perhaps most critically, the Task Force offers no way to achieve the necessary uniformity across jurisdictions, whether among the various state systems or between the various state systems and the federal rules. Rather, by preserving the ability of individual states to opt in or out of the Commission's reforms, the Task Force draft would preserve significant opportunities for regulatory arbitrage and gamesmanship, while perpetuating today's ongoing disputes. Moreover, it would engender a whole new round of state proceedings that would dwarf the interconnection battles that have been raging since Congress enacted the 1996 Act. When dealing with the interconnection of networks, many of which span state boundaries, no clear public interest is served by treating intrastate access traffic, for example, differently than all other traffic.

---

137 The Task Force draft calls for increases in the monthly SLC of up to $1.00 per year for four years or, for those customers whose rates (including local service rates and state and federal SLCs) are below a prescribed benchmark, up to $2.00 per year. These increases could produce SLC caps substantially above those proposed in the ICF Plan. *See* NARUC Task Force Draft Version 7 at 8-9.

*Second*, the Task Force continues to contemplate preservation of *origination* charges. As stated below, origination charges are inconsistent with the Commission's goals in this proceeding, and with section 251(b)(5).[138] Maintaining origination charges would fail to address one of the most fundamental issues crying out for reform—the juxtaposition of two mutually inconsistent intercarrier compensation regimes, reciprocal compensation and originating access. Retaining originating access charges would force the Commission to continue to try to define and police the line between services subject to reciprocal compensation—for which no origination charges apply—and services subject to originating access fees. Moreover, Task Force Version 7 imposes originating access fees only on standalone long distance carriers, which is both competitively biased and would result in permitting "all distance" carriers to recover switching costs twice – once in toll rates and once from the USF. While the Task Force has not yet established a final position on this issue, we continue to encourage both the Task Force and the Commission to eliminate origination charges as part of any reform effort.

*Third*, by creating rules that retain unavoidable termination charges for traffic that makes use of the PSTN while exempting IP-IP traffic from regulation, the Task Force draft would perpetuate a high degree of regulatory intervention and fail to resolve the coming tension between IP-IP services and PSTN-interconnected services. Instead, it would (1) preserve substantial artificial regulatory incentives impacting carrier technology choices, (2) encourage migration to IP-based communications that do not utilize the PSTN, exacerbating today's looming stranded investment issues; (3) fail to stabilize circuit-switched carrier revenue streams, leading to continued uncertainty and hampering investment decisions; and (4) maintain today's

---

138 *See infra* Section VI.D.2.

pressures to impose economic regulation on IP-IP traffic in order to prop up the existing PSTN systems. The Commission simply cannot solve today's intercarrier compensation problems if it retains unavoidable termination charges for any traffic in its reform effort.

Thus, while we will continue to work with the Task Force, we urge the Commission to recognize that its proposals in their current form do not and cannot meet the Commission's stated goals in this proceeding.

### B. The Commission Should Reject Reforms that Are Inconsistent with the Ongoing Migration of IP Networks and Services, or that Would Require Substantial Alteration of IP-IP Interconnection and Compensation Arrangements

Telecommunications providers today are transitioning their products and services inexorably from traditional circuit-switched to IP-based packet technologies.[139] Indeed, "[m]any manufacturers are concentrating most, if not all, new development and marketing on IP-capable alternatives while merely providing maintenance support for legacy circuit-switched equipment currently in place."[140] Moreover, IP-based communications can completely bypass circuit-switched network facilities, with end users communicating entirely via IP-IP voice services.[141]

The system of interprovider compensation for these IP networks is substantially different from and fundamentally inconsistent with the hodgepodge of legacy intercarrier compensation regimes that persist in the PSTN world. To implement the Commission's goal that "new rules accommodate continuing change in the marketplace and do not distort the

---

139 *IP-Enabled Services*, WC Docket No. 04-36, Notice of Proposed Rulemaking, FCC 04-28, 19 FCC Rcd 4863, 4871 (¶ 10) (2004) ("Today, . . . IP networks are increasingly being used to carry voice communications.").

140 *Id*. at 4872.

141 *See id*. at 4875-9 (describing both telephony and non-telephony IP voice applications and services).

opportunity for carriers using different and novel technologies to compete for customers,"[142] reform must create uniform rules that address and reconcile this inconsistency while enabling IP services to flourish.[143] Only the ICF Plan offers the prospect of achieving that goal.

We agree with ARIC, Verizon, and others that interconnection among IP networks provides "important evidence" as to the direction of intercarrier compensation reform for the PSTN.[144] Many commenters, however, misunderstand the structure of the marketplace for IP traffic exchange, and therefore draw erroneous conclusions regarding the best way to make this transition. For example, several commenters cite the presence of transit charges among IP networks as irrefutable proof that "bill-and-keep" is economically irrational.[145] What the IP marketplace really shows, however, is that the ICF Plan, incorporating a modified bill-and-keep structure with provision for transit fees, is only reform proposal before the Commission that is consistent with the compensation arrangements the market has produced for IP networks today.

At least three key lessons for PSTN interconnection and traffic exchange can be drawn from a clear-headed examination of the structure of the Internet markets and Internet backbones. *First*, to harmonize the compensation systems governing PSTN-delivered services and IP-delivered services, either the PSTN must transition to a bill-and-keep model for origination and termination, or the Internet must transition to a CPNP model for IP origination and termination. ARIC itself at least implicitly agreed: its plan includes a new system of session-based charges from ISPs to packet facilities providers designed to bring access charge-

---

142 Further Notice ¶ 33.

143 ICF Comments at 13.

144 *Accord id.*

145 *See, e.g.,* Rural Alliance Comments at 166-67; Time Warner Telecom Comments at 32.

type revenues to IP-IP interconnection.[146] Similarly, the Rural Alliance calls on the Commission to manage this transition "as the public network evolves from one based on circuit switching to one based on IP switching."[147] Unless the Commission is willing—and able—to follow ARIC's lead and impose legacy access-type charges on the Internet, it must instead replace the multiple systems of intercarrier compensation on the PSTN, which have evolved through a long history of government intervention, with a coherent system compatible with the IP model.

Our plan, along with those of the Independent Wireless Providers and NCTA, are among the only plans that fully embrace the bill-and-keep model for the PSTN in which end users (with universal service assistance to assure affordable and reasonably comparable rates) pay the two-way cost of their connections with the network. Under these plans, origination and termination charges cease to exist on the PSTN, just as they do not exist today on IP networks.[148]

To harmonize the PSTN and IP frameworks, several features of the market-created rules governing IP networks must be incorporated into the rules governing the PSTN. Interprovider charges for origination and termination must be eliminated. As discussed above, in

---

146 ARIC Plan at 97-102 (section entitled "Cost Recovery in an IP World Must Evolve"). It is unclear whether the Rural Alliance supports this feature of the ARIC Plan. In its comments, the Rural Alliance concedes that "RLECs will no long receive substantial intercarrier compensation payments in an IP environment," which suggests that the Rural Alliance itself has recognized that ARIC's proposal for new, mandatory session-based access charges is both unworkable and bad public policy. *See* Rural Alliance Comments at 165.

147 Rural Alliance Comments at 165.

148 None of the other plans makes any effort to harmonize the PSTN with the Internet. The NARUC Task Force's no-origination-fee alternative is the next closest, because it at least eliminates carrier-to-carrier origination charges, but its retained termination charges remain fundamentally incompatible with the market-based system prevailing in the IP market. The CPNP plans (NARUC Task Force's origination alternative, CBICC, Rural Alliance, ARIC, EPG, BellSouth, and Frontier) all preserve both origination and termination charges, and would therefore leave the PSTN under a distinctly different model with respect to origination and termination from the Internet.

the IP context, end users pay for Internet access service that covers *both* the origination traffic from the end user to the ISP and the termination of traffic from the ISP to the end user Moreover, intranetwork transport costs as well as the costs of establishing interconnection with other networks should also be recovered on a bill-and-keep basis.

*Second*, at the same time, PSTN rate regulation must be relaxed to allow PSTN carriers to implement the bill-and-keep model. The Internet access market has no retail price regulation that forces origination and termination cost recovery into interprovider charges. Thus, Internet access providers can recover their origination and termination costs from their end user customers, without governmental interference, and subject to competitive market forces.

*Third*, there must be some means of fairly allocating the transport responsibilities among interconnecting parties. As discussed above[149] and as the 1996 Act itself recognized, the economic characteristics of the Internet and the PSTN differ.[150] Unlike in the IP context, where peering and transit relationships flourish despite the absence of legal interconnection mandates, the structure of the PSTN necessitates default rules to govern interconnection and exchange of traffic among PSTN carriers.

---

149 *See supra* Section II, pp. 17-19.

150 *See supra* Section II; s*ee also* 47 U.S.C. § 251(a-c); *Local Competition Order*, 11 FCC Rcd at 15508-9, 16041 (¶¶ 10-11, 13) (discussing the largest LEC's incentives and ability to deny interconnection or insist on supracompetitive prices or other unreasonable conditions for terminating calls); D. Malueg & M. Schwartz, "Interconnection Incentives of a Large Network Facing Multiple Rivals," Working Paper 03-01 (January 2003) (available at: http://www.georgetown.edu/faculty/schwarm2/papers/InterconnectMultipleRivals.pdf). In contrast, the Internet backbone has no single dominant entity, but multiple relatively similarly sized providers of Internet backbone services, and no mandatory interconnection. Thus, there is not presently a single entity that can exercise market power through the threat of withholding interconnection, and, indeed, the similarly-sized service providers have an incentive to interconnect to maximize the network externality benefits for all networks. *See* Kende, The Digital Handshake, at 20-31.

Only the ICF Plan uniquely provides for a fair sharing of the transport costs between the networks. The ICF Plan, for example, recognizes that slavish adherence to the single POI per LATA approach can result in one-sided transport burdens. With only a single POI per LATA, CLECs and CMRS providers can shift transport costs to ILECs. On the other hand, interconnection solely in ILEC local calling areas or end offices could shift the transport burden in the other direction, especially when interconnectors today frequently interconnect with the ILECs at, or above, the ILEC tandems. We therefore distinguish between hierarchical networks, which are predominantly ILEC tandem networks, non-hierarchical networks and Covered Rural Telephone Company (CRTC) networks. The proposed default rules represent a heavily-negotiated fair sharing of the transport obligations. CRTC's are not responsible for carrying traffic outside of their service area, except to other CRTCs. Non-hierarchical networks can maintain a single edge in a LATA, but must interconnect with hierarchical networks on a more distributed geographic basis, predominantly centered around the ILEC tandems. Hierarchical networks must offer to share the cost of those interconnection facilities, but only up to 40 miles in length. Hierarchical networks may not force interconnectors to deliver traffic to their end offices or to pay transport charges between the tandems and subtending end offices, thus further reducing any potential market power of hierarchical networks in direct interconnection. These default rules would accomplish for the PSTN what peering and transit accomplish in the Internet regime—a fair sharing of transport burdens among interconnectors—but they do so in a manner that recognizes the differences in institutional and market structure between the PSTN and the Internet regime.

CBICC and the Independent Wireless Plans would not produce such a fair allocation. They slavishly adhere to a single POI per LATA for both physical interconnection

and to establish financial responsibility for carriage of traffic, without regard to the allocation of relative transport burdens.[151] Verizon, on the other hand, consigns all these issues to carrier-to-carrier negotiations, ignoring issues presented by its overwhelming dominant size in its in-region markets.[152] Qwest would require RLECs to carry traffic outside of their exchange service territory—an act of questionable utility when these entities will likely already require additional universal service support to maintain affordable and reasonably comparable rates, and therefore imposing additional costs on these carriers simply serves to increase the amount of universal service support.[153] BellSouth imposes on CLECs and CMRS providers the full cost of connecting to the ILEC tandem, rather than sharing those costs, which could encourage ILECs to rearrange tandems to increase the transport costs borne by competitors and minimize their own transport costs.[154]

Accordingly, the ICF Plan provides the best transition from the current multiplicity of PSTN intercarrier compensation regimes to the interconnection and traffic exchange arrangements and market structure of IP networks.

### C. No Other Plan Appropriately Balances the Concerns of Rural Carriers with Those of Competitive Providers

Reflecting the fact that the ICF Plan balances the interests of multiple conflicting parties, the ICF Plan's treatment of rural carriers is contrastingly described as "blatantly discriminatory and monopoly-reinforcing"[155] and as failing to provide "adequate compensation"

---

151 *See* Western Wireless Comments at 21-22; Pac-West Comments at 39.

152 *See supra* Section II.

153 *See* Qwest Comments at 10.

154 *See* BellSouth Comments at 18.

155 T-Mobile Comments at 23.

to rural carriers.[156] In reality, the ICF Plan provides the Commission with an appropriate middle ground. The Plan acknowledges the transport costs associated with rural territories and provides exceptions to its interconnection rules to address these concerns. The ICF Plan also provides an ongoing intercarrier revenue stream associated with this increased transport. On the other hand, the ICF Plan eliminates the existing terminating access monopoly by eliminating intercarrier charges for bottleneck facilities such as the local loop and switch and permitting all carriers, including rural carriers, to maintain such charges only for "bypassable" facilities, such as rural LEC transport facilities. This framework creates the opportunity for gradually increasing market pressure to come to bear on rural carriers. The net effect of these elements is a balanced approach that acknowledges the unique position of rural carriers, while allowing market forces to bring competitive benefits to rural consumers.

Each of the other plans submitted to the Commission either preserves the existing monopoly market power of rural ILECs, thus harming rural consumers, or ignores the geographic and density issues faced by rural carriers completely. All of these proposals are thus ultimately unsustainable. Rural carriers cannot bury their heads in the sand and declare immunity from the competitive pressures facing the rest of the telecommunications marketplace. At the same time, competitive carriers cannot ignore the reality of carrier of last resort obligations and the rate regulated nature of the vast majority of rural incumbents. The Commission's reform effort must carefully balance both the benefits of the marketplace competition and the challenges of serving rural America. The ICF Plan provides this balanced perspective.

---

156 Rural Alliance Comments at 4, 65- 66.

### 1. The Interconnection Obligations Proposed by Wireless Carriers and Qwest Fail to Recognize the Reality of Rural Networks

Many carriers criticize the complexity of the ICF Plan's interconnection rule proposals and alternatively suggest simplified plans based largely upon unmodified "edge"-like proposals in which every carrier has an obligation to transport traffic to every other carrier's network edge.[157] Indeed, several carriers endorse the proposed ICF interconnection rules as a strong starting point, but seek to eliminate the exceptions granted to rural carriers.[158] The purported "complexity" of our interconnection rules, however, simply stems from our Plan's accommodation of the realities facing rural networks and the concerns of rural carriers.

We recognize that, because CRTCs often serve remote locales, the distance to an interconnecting carrier's Edge, on average, is likely to be greater than it is for other carriers, imposing correspondingly greater costs. The impact of these costs is exacerbated by the low population densities and small subscriber bases over which CRTCs often must distribute these higher costs. Indeed, wireless carriers emphasize the importance of indirect interconnection and transiting based upon these very efficiency concerns.[159] Recognizing these geographic and economic realities, the ICF Plan accommodates the special needs of rural carriers by providing that every carrier exchanging traffic with a CRTC must accept financial responsibility for carriage of CRTC-originated traffic at an edge or meet point within each contiguous portion of the CRTC's study area.[160] While this provision adds a small measure of complexity compared to

---

157 *See, e.g.,* Qwest Comments at 10, CTIA Comments at 22.

158 *See, e.g.,* MetroPCS Comments at 9.

159 *See, e.g.,* Nextel Communications Comments at 6; Metro PCS Comments at 21; Leap Wireless Comments at 11-12.

160 ICF Comments, Appendix D at 19 ("a 'Contiguous Portion of the CRTC's Study Area' or any similar phrase includes all exchanges within that study area that share a common boundary with one or more of that CRTC's other exchanges.").

the unmodified edge proposals proffered by Qwest and several wireless carriers, the public interest benefits to be gained by accommodating these legitimate concerns of CRTCs readily justify the small increment of complexity it creates.

Competing proposals which fail to provide any exceptions for transport to and from rural areas, or to recognize the unique challenges of rural carriers, threaten to further expand USF and undermine the viability of small rural exchanges. On the other hand, rural LEC proposals suggesting that they should bear none of the cost associated with the transport of their customer's traffic or that interconnecting carriers should be required to purchase facilities and transport from them are similarly anti-competitive and can be used to prevent market entry. Once again, the ICF Plan provides a balanced perspective on this issue. Further expansion of USF funding (and the issue of sustainability) has been carefully weighed against protection of competitive markets and the corresponding benefits to consumers.

**2. Simply Deferring Intercarrier Compensation Reform for Rural Carriers Will Not Protect Consumers.**

The Ad Hoc Telecommunications Users Committee ("Ad Hoc"), an organization representing the interests of large telecommunications customers, cites a report on the failings of the Universal Service Fund as support for the proposition that the Commission should defer applying new intercarrier compensation rules to rural carriers.[161] We fully agree with Ad Hoc that "reform is overdue" for this system.[162] However, we do not agree that further delay of intercarrier compensation reform for rural carriers will ultimately advance Ad Hoc's goals of reform. As we and other commenters have amply demonstrated, disparities in the way that certain classes of carriers or traffic are regulated today create arbitrage opportunities, endless

---

161 *See* Ad Hoc Telecommunications User Committee Comments at 15-17.

162 *Id.* at 16.

litigation, network inefficiencies, and a host of other problems. Preserving the status quo for rural carriers will simply exacerbate the pressures on these carriers, to the ultimate detriment of rural consumers, who will see curtailed investment, deteriorating service quality, higher rates and, ultimately, reduced service. The Commission can only successfully solve these problems by replacing the current patchwork *in toto*. The ICF Plan offers the only coherent and systematic roadmap for doing so.

Ad Hoc argues that the Commission should not "make the current USF 'mess' even worse by increasing USF payment to rural ILECs to assure revenue neutrality."[163] Maintaining the current intercarrier compensation regime, however, and thus disguising the implicit subsidies that flow from this regime, will not benefit consumers. Indeed, the opposite is true. By making the subsidies in the existing system more explicit, the Commission will eliminate competitive disparities and curb the inefficiencies and inappropriate incentives inherent with the existing implicit subsidy-laden system.

Of even greater importance, however, is the simple fact that it is not possible as a practical matter to exclude a significant portion of the industry from a universal reform of the rules. If, for example, the Commission were to adopt any of the proposals currently pending before it, whether one of the many bill-and-keep proposals or any of the various unified rate proposals, but exclude rural carriers from its application, it would simply create yet another layer of disparities and asymmetric obligations, leading to yet more instability, uncertainty, litigation, and opportunities for arbitrage. Moreover, this effort likely would fail because, rather than deferring reforms for rural carriers, the Commission would nevertheless be forced to adopt an entirely new set of rules to define how carriers operating under the "new" regime would interact

---

163 *Id.*

with rural carriers operating under the old one, including determining what interconnection obligations rural carriers would have, what compensation obligations would apply, how traffic would be measured, and a host of other issues.

**3. Rate Banding Would Cause Arbitrage and Dampen Competition in Rural Areas.**

Certain parties advocate continuation of intercarrier compensation payments, while acknowledging the need to eliminate the distinction between access and reciprocal compensation. These proposals, however, continue to champion varying rates based upon the individual characteristics of particular networks. For example, CenturyTel argues that rates could be based upon current ILEC rates or "rate bands could be created that reflect relative cost characteristics based on such factors as line density and loop length."[164] Such proposals, however, are ultimately anti-competitive and preserve the arbitrage problems this reform effort is attempting to address.

*First*, allowing the charges for transport and termination to vary by line density and loop length—which are cost factors for loop plant, not switching and transport—would simply perpetuate the implicit subsidies that competition itself renders unsustainable. For universal service to be assured sustainability in the face of various potential sources of market competition, the Commission must continue to eliminate traffic sensitive recovery of loop costs, as it did in both the *CALLS* and *MAG* Orders.

*Second*, by definition, proposals for intercarrier compensation rate banding or individually based rate structures are non-uniform and reintroduce the issues of traffic segregation, arbitrage, billing and litigation that this reform effort is attempting to resolve. Banding proposals are particularly problematic given that they will necessarily reflect average

---

[164] CenturyTel Comments at 29; *see also* Rural Alliance Comments at 12.

rates. This will mean that some carriers within a band will be over compensated and others will be under compensated. These are the types of rate differentials that created the current arbitrage problems and market distortions that caused the Commission to open this docket in the first place.

*Finally*, these banding proposals are also ILEC-centric and fail to address the fact that telecommunications is now a competitive market. Once a rate band has been established for a given area, would wireless carriers and competitive local exchange carriers be permitted to charge the same rates? Would a wireless carrier serving both rural and urban markets assess different rates depending upon the location of their end user at the time the call was originated and terminated? It is not difficult to imagine the endless litigation and billing disputes that would arise from such a structure.

### D. The Other Proposals before the Commission Suffer from a Host of Additional Fatal Flaws

#### 1. Draft Principles are not enough

Several commentators have suggested that the ICF Plan is too detailed and that general principles are sufficient to guide the industry on issues of interconnection and intercarrier compensation. While such optimism may be commendable, the harsh reality of the existing market provides more than ample evidence that general guidelines will not be sufficient. Our process itself is a demonstration of this reality. All of the carriers that originally participated in the ICF process agreed upon certain basic premises for reform. When carriers began to discuss how those general principles would be implemented, the necessity for additional specificity and clarity became obvious. It was the implementation of guidelines that caused significant controversy and caused a number of carriers to leave the ICF process.

The ICF Plan contains significant detail because the parties to ICF spent literally thousands of hours discussing their respective goals and concerns – discussions that addressed, digested, and ultimately resolved a vast array of potential opportunities for arbitrage, operational inefficiencies, and ongoing disputes. The complexity of modern telecommunications networks and services is here to stay, regardless of the level of detail the Commission adopts in its rules. Less detail would simply require more interpretation in the future, create uncertainty and inevitably result in litigation. The members of the ICF strived to avoid such uncertainty by clarifying obligations in advance and by providing industry with sufficient detail regarding each carrier's obligations under the Plan to permit implementation to occur with a minimal need for clarification and/or litigation.

Indeed, without such detail it becomes impossible to realistically assess the impact of a particular plan on the industry as a whole. Although sometimes used to argue against us, many carriers have actually calculated the dollar impact of the ICF Plan on various aspects of their rates.[165] Plans based on mere principles, however, leave the Commission at a loss to understand the real impact of these plans or other carriers the ability to plan for implementation. One of the significant consequences of this long running docket is the uncertainty it has created for investment and business planning. The Commission should not succumb to the urge to adopt principles only. The industry needs to have certainty established after this long period of debate.

### 2. There Is No Sound Affirmative Argument In Favor Of Retaining Either Originating Or Terminating Access Charges.

As we have previously shown, it is critically important to move to a system without intercarrier payment obligations and thereby to eliminate both originating and terminating access charges. A number of parties, however, have attempted to manufacture

---

165 *See, e.g.,* CenturyTel Comments at 12.

affirmative arguments in favor of retaining either or both of these charges, and some parties seem particularly intent on defending originating access charges. As the industry moves rapidly toward an Internet model of pricing, however, these charges have become not only anachronistic but harmful. There is no sound affirmative argument for retaining these charges.

*Originating Access*. Some commenters assert that the Commission must keep originating access charges to maintain competitive neutrality, but these contentions do not withstand scrutiny. For example, BellSouth asserts that, without originating access, stand-alone long-distance carriers would have an unwarranted advantage over facilities-based all-distance carriers in providing long-distance service, on the theory that the all-distance carrier would incur the cost of providing local connectivity whereas the stand-alone long-distance carrier would not.[166] BellSouth also argues that stand-alone local carriers would suffer without originating access charges, because they would be denied "the opportunity to recover the cost of enabling [an] interexchange call."[167]

The flaw in both arguments is that BellSouth is looking at the matter from the perspective of the carrier instead of the end-user. The local carrier's cost can and should be recovered from the end-user, and the ICF Plan provides for such recovery. Thus, in BellSouth's first example, the stand-alone long-distance carrier's customer still must obtain local connectivity from a LEC and must pay that LEC for transporting his call to the IXC; the customer does not get local connectivity for free just because originating access charges have been eliminated and the IXC does not incorporate those costs into its long-distance rates. For this reason, there is no *competitive* disparity; the IXC's customer does not get a free lunch.

---

166 *See* BellSouth Comments at 10; *see also* Rural Alliance Comments at 65.

167 *Id.* at 10; *see also* Maine/Vermont Comments at 13-14; NARUC Task Force Draft Version 7 at 3-4; Cox Comments at 9.

Indeed, such arrangements allow the two carriers to compete more directly for long-distance customers based only on their relative cost and efficiency in providing interexchange connectivity. Similarly, the stand-alone local carrier in the second example could recover its cost of providing connectivity to an IXC from its own customer under the ICF Plan, and thus would not be "denied" the opportunity to recover its costs.

This contrasts sharply with the NARUC Task Force's most recent origination proposal. Although its proposal remains poorly defined, it appears that the NARUC Task Force would apply originating access charges and USF cost recovery in a manner that could allow double recovery for come carriers. That proposal is blatantly discriminatory.

The purpose of the network, to provide customers with access to the PSTN, does not change because of the existence of interexchange carriers, wireless carriers or CLECs. It is simply a regulatory conceit that customers purchase local exchange service only for access to other customers of the same company. Customers do not choose a telephone company based upon the other customers they will be able to reach. End users expect to be able to reach everyone else connected to the PSTN regardless of who serves them.

The Rural Alliance makes the same mistake of assuming that what is "free" to the IXC is also free to the end-user when it suggests that end-users "that generate large amounts of originating long distance traffic will substitute the special access services purchased today for free, or nearly free, switched access."[168] Again, under the ICF Plan, local connectivity is never "free or nearly free" to the end-user. To the contrary, if these customers were to forego their special access arrangements, they would have to replace these efficient, high capacity circuits by

---

[168] *See* Rural Alliance Comments at 63-64; *see also* NARUC Task Force Draft Version 7 at 4.

establishing—and paying for (including the SLC)—a mass of less efficient local lines with the LEC. Such a tradeoff would rarely be economical.

Taking a slightly different tack, Maine and Vermont argue (at 14-15) that equal access requirements, which are imposed uniquely on wireline LECs, require the retention of originating access charges in order to provide "compensation" and to maintain competitive neutrality with intermodal competitors such as wireless carriers that do not have equal access requirements.[169] This is a non sequitur. While equal access facilitates stand-alone long-distance offerings, the mere obligation to provide equal access does not require any particular method of recovering originating access costs. Indeed, such costs have always been recovered through a combination of end-user and carrier charges. As even Maine and Vermont concede, equal access places wireline LECs at a competitive disadvantage only "if the burden is not matched by a revenue source." *Id.* at 15. The ICF Plan, of course, provides for the full recovery of the LECs' costs through flat-rated end-user charges and universal service support. Accordingly, there is no competitive disadvantage. To the contrary, as explained above, the industry as a whole, including wireline LECs' intermodal competitors, are rapidly moving toward the Internet model of pricing in which the cost of local connectivity is typically recovered solely from the end-user, not from other carriers or providers that may provide services over that link, and the current intercarrier compensation regime is *hindering* traditional carriers from responding to these new competitive realities.

Still other carriers justify the imposition of originating access charges based upon the purported benefits associated with a framework in which every individual way in which the local network may be used must be catalogued and associated with a single entity that is deemed

---

[169] *See also* Time Warner Telecom Comments at 16; NARUC Task Force Draft Version 7 at 4; Cox Comments at 8-9.

to have the "retail" relationship with the consumer with respect to that service. Under such a framework, every other network involved in the provision of the service is entitled to charge the "retail" provider for any "wholesale" inputs it supplies. For example, Frontier discusses the need to ensure that the responsibility for "origination, transmission and termination" of traffic should be assigned to the "retail service provider."[170] There are multiple entities, however, that in fact have a retail relationship with the end user. Both the ILEC and the IXC charge the customer for services provided. It would appear most logical that each should charge for the service it actually provides, rather than mandating that IXCs purchase and resell the ILEC network to the ILEC's own customer. In fact, these arbitrary regulatory payment obligations simply increase transaction costs for consumers in order to permit the ILEC to recover costs indirectly through an IXC rather than directly from the end user itself. Indeed, the Commission has already (correctly) proceeded a considerable distance along this road by eliminating, first, the per-minute carrier common line charge (CCLC), and then its successor, the flat-rated PICC. By imposing the full interstate cost of the local loop, which is used both to originate and terminate calls, on the end user (with universal service support available where the Commission adjudged this cost to be unaffordable) the Commission has properly recognized the transactional efficiencies and competitive benefits of direct end user recovery. The ICF Plan merely takes the logical next step by doing the same with other proximate elements of the local exchange network, including the remaining bottleneck facilities that must be used to reach the end user.

Indeed, all of these claims are ironic, because it has always been understood that originating access charges exist mostly for the purpose of creating an implicit *subsidy* running from the long-distance carrier to the LEC. Even in 1983, when the Commission established the

---

[170] *See, e.g.*, Frontier Comments at 10; *see also* Rural Alliance Comments at 13.

access charge regime, it acknowledged that many of the costs of local connectivity were properly recovered from end-users, but that it was shifting recovery of many of those costs to the IXC to retain the system of implicit universal service subsidies that had obtained within the Bell System.[171] As explained above, in the intervening years the traffic-sensitive costs of the local network have declined sharply. The cost incurred in using local networks to make long distance calls is now small, and virtually all local connectivity costs would now be properly recovered from the end-user. Accordingly, inefficient rate structures like originating access charges, which artificially suppress demand for wireline services and investment in technological improvements, should now be phased out in favor of cost-based flat-rated end-user charges, and subsidies should be provided through explicit universal service mechanisms, rather than through intercarrier rates.

Some parties claim that, if originating access charges are eliminated, LECs will not practically be able to recover those costs from end-users.[172] These claims, however, consist only of vague assertions, and ignore the role of universal service support in maintaining affordable rates; none of these parties has made any attempt to dispute our detailed projections of the SLC and universal service revenues that would be available to LECs (including rural ILECs) under the plan. Under the ICF Plan, the facts are that most end-users rates will go *down*, and that

---

171 *MTS and WATS Market Structure*, CC Docket No. 78-72, Third Report and Order, Phase 1, 93 FCC 2d 241 (*1983 Access Charge Order*), ¶¶ 144-149, 169-170, *recon. MTS and WATS Market Structure*, CC Docket No. 78-72, Memorandum Opinion and Order, 97 FCC 2d 682 (1983) (*First Reconsideration of 1983 Access Charge Order), second recon., MTS and WATS Market Structure*, CC Docket No. 78-72, Memorandum Opinion and Order, 97 FCC 2d 834 (1984) (*Second Reconsideration of 1983 Access Charge Order).*

172 *E.g.*, TDS Comments at 20 ("LECs cannot recover the revenue represented by lost originating access charges solely from their end users while continuing to maintain reasonable rates").

SLCs and universal service funding will provide a more than reasonable opportunity for all LECs to recover their costs.[173]

Finally, some parties suggest that if the Commission does adopt a plan like the ICF Plan, it should repeal the LECs' equal access obligations.[174] There is nothing in our Plan, however, or in intercarrier compensation reform more generally, that requires the Commission to address equal access issues in this context; indeed, these requests are simply another manifestation of these parties' mistaken assumption that originating access charges are indispensable to an equal access regime. Equal access can function equally well with end-user or carrier charges for the recovery of local connectivity costs. Moreover, the equal access regime is well-established and enhances consumers' choices of providers and services; repealing equal access would be a needlessly drastic and anticompetitive reaction to the establishment of a rational intercarrier compensation regime.

Those parties that propose retaining an originating access charge make no effort to show how originating access—particularly originating access charges that vary among carriers—could be implemented while continuing to assure nationwide averaged and integrated toll rates pursuant to Section 254(g). Particularly when originating access charges are higher in some areas than in others, the market will tend to drive carriers to serve either low access charge areas or high access charge areas, but not both.

---

173 Some commenters, such as TDS, appear to assume that IXCs could continue to charge the same rates for long-distance even after originating access charges are eliminated, but this assumption is nonsensical considering the vigorously competitive nature of the long-distance market. *See* TDS Comments at 21 (arguing that IXCs would receive "an unfair windfall because the IXCs would realize the benefits and profits of originating their customers' interexchange calls while bearing none of the costs"); *cf. id*. at 20 n.29 (acknowledging that eliminating access charges would lead to lower long-distance rates and benefits for rural customers).

174 *See, e.g.*, TDS Comments at 21; Maine/Vermont Comments at 14.

Finally, maintaining originating access charges in any form dooms the Commission or the states to forever adjudicating disputes between carriers over whether a particular type of traffic falls within the "local" retail service package or some other retail service package. The ICF Plan ends the long-running debates over wireless rating and routing and wireline VNXX arrangements in part because whether a call is "local" or "long-distance" no longer changes whether the originating carrier is a payer or recipient of compensation. Ending originating charges opens the door to wide area calling plans, even for customers of small rural telephone companies that serve only a few hundred subscribers.

*Terminating Access*. Many commenters acknowledge what the Commission has long recognized: the existence of an anticompetitive "terminating access monopoly"—*i.e.*, the fact that, even in otherwise competitive markets, a terminating carrier has both the incentive and the ability to charge the calling party's carrier above-cost rates in today's CPNP system.[175] The originating or transiting carrier has no choice but deal with the one carrier that serves the called party, even though the first carrier has no relationship with the called party and no ability to influence the choice of terminating carrier.[176] Thus, terminating access charges shift costs from the end-user—the only party in a position to assess the value being provided by the terminating carrier and make competitive choices—to other carriers, who are forced to deal with the carrier as a monopoly.[177] The Commission has an extensive scheme of regulation in place, even for otherwise non-dominant CLECs, to keep the terminating access monopoly in check.[178]

---

175 Further Notice ¶ 24; *see, e.g.*, T-Mobile Comments at 9; WilTel Comments at 9; Time Warner Telecom Comments at 35.

176 *Id.*

177 *Id.* ("[T]he called party's LEC may take advantage of the situation by charging excessive terminating rates to a competing LEC").

178 *See, e.g., CLEC Access Charge Order*; s*ee also* Qwest Comments at 20-21.

The only way to *eliminate* the terminating access monopoly, and to subject these costs to competition, is to eliminate terminating access charges altogether, as the ICF Plan does. Even opponents of bill and keep concede that the terminating access monopoly problem does not exist with bill and keep.[179] Most of the other plans, however, would retain intercarrier charges for termination, and thus would retain the terminating access monopoly and the need for extensive federal and state regulation (and litigation under those rules).

To be sure, different proposals offer different means of regulating and controlling the terminating access monopoly. Some plans, such as the NARUC Task Force's work-in-progress drafts and BellSouth's proposals, would have the Commission prescribe a particular terminating access rate;[180] other plans, such as the CLEC proposals, would have regulators use TELRIC to prescribe terminating access rates.[181] But all of these plans fundamentally opt for monopoly over competition: instead of recovering these costs from the terminating carrier's end-user, where they would be transparent to the end-user and subject to competition, all of these plans allow these costs to be recovered in monopoly charges with rates determined by regulators.[182] And, plans from the other extreme, such as Verizon's which relies entirely on contractual arrangements, would *worsen* the monopoly problem by removing all regulation and subjecting the terminating monopoly to intercarrier "negotiations" – the very state of affairs that led to the *CLEC Access Charge Order*.[183] The only plan that would adequately promote competition on the terminating end is the ICF Plan.

---

179 *See, e.g.*, Time Warner Telecom Comments at 35 ("Bill and keep would eliminate the terminating monopoly").

180 NARUC Task Force Draft Version 7 at 4; BellSouth Comments at 17.

181 *See, e.g.*, Pac-West, et al., Comments at 28-31; KMC/Xspedius Comments at 37-39.

182 *See, e.g.*, SBC Comments at 10-11.

183 Verizon Comments at 6-15.

Time Warner Telecom's suggestion that the Internet demonstrates that intercarrier termination charges do not perpetuate the terminating monopoly problem misunderstands the nature of intercarrier relations within the Internet world.[184] Time Warner Telecom argues that even though Internet backbone providers have "a 'monopoly' over access to customers . . . served by the backbone network," backbone providers sometimes pay each other for the exchange of traffic, and regulation of these payments has not been thought necessary to prevent terminating monopolies.[185] In Time Warner Telecom's view, this demonstrates that it is not "intercarrier payments *per se* that perpetuate[] the terminating monopoly problem."[186]

It is the CPNP regime that creates the terminating access monopoly, however, and Internet access is *not* characterized by CPNP. As described above,[187] ISPs obtain transit from backbone providers, but they must recover all of their costs from their *end-users*; they do not impose terminating (or originating) access charges on backbone providers. Moreover, the backbone market is competitive, and if backbone providers charge ISPs too much for access, the ISP will go elsewhere. Contrary to Time Warner Telecom's analogy, relations between Internet backbone providers are actually analogous to the relations between transiting carriers in the ICF Plan. As with the Internet, the ICF pPlan provides for intercarrier payments between transiting carriers; while payments between Internet backbone providers are not regulated today because no backbone provider has a large enough customer base to dictate terms to any other backbone provider, the ICF Plan does provide "edge" rules and prescribed transiting rates in recognition of the fact that transiting carriers may have greater market power. But our Plan largely adopts the

---

184 *See* Time Warner Telecom Comments at 31-32.

185 *Id.*

186 *Id.* at 32.

187 *See supra* Section II, pp. 17-19.

Internet model for the entire industry; the success of that model supports, not disproves, the need for the ICF Plan.[188]

### 3. Capacity-based Charges Are Unworkable and Do Not Resolve the Issues Pending Before the Commission

Frontier and others have suggested that another alternative to the current regime of per minute-of-use access charges would be the imposition of "port charges." These charges would be flat rated monthly charges for the physical DS1 connection to an end office switch. While we agree with Frontier that minute-of-use charges are "unsuited to a competitive environment" and "inherently imprecise,"[189] we cannot agree that port charges or other "per connection" charges are an improvement. Whether charges for the termination of traffic are per minute-of-use based or flat rated, they create the same problems by failing to achieve the level of uniformity needed to address today's arbitrage problems or solve the terminating monopoly issue.[190]

Once the determination is made that carriers must compensate each other for the exchange of traffic, the type of charge imposed becomes largely irrelevant. Carriers still have a natural terminating monopoly over their end user customers. That terminating monopoly can be exploited through flat rated charges just as effectively as it can be with per minute-of-use charges. This in turn requires the intervention of regulators to ensure that port charges are appropriately set for a particular carrier, reintroducing cost proceedings and litigation into the system.

---

188 *See also* Time Warner Telecom Comments at 32 n.48 (conceding that it would not be appropriate to "import the characteristics of Internet backbone traffic into the local market").

189 *See, e.g.*, Frontier Comments at 7; CCAP Comments at 12-17.

190 CCAP, for example, explicitly states that the port charge would include the LEC's costs of end office local switching and interoffice transport. CCAP Comments at 16.

In addition, port charges impose additional implementation and administrative issues. For example, while CCAP argues that a "capacity-based interconnection regime would eliminate the need for ILECs to continue to track originating and terminating minutes of use on their networks for purposes of receiving compensation from IXCs, CMRS providers, CLECs and other providers of telecommunications services,"[191] it could achieve this result only by (1) refusing to permit interconnecting carriers with low traffic volumes to share a connection; or (2) thrusting the task of allocating the charge for a shared port onto another party, such as a transiting carrier. In the first case, every carrier would be required to maintain a port on every other carrier's network, an obvious absurdity. In the second, the terminating carrier would need to continue all of the same billing and recording platforms in existence today, with the added complexity associated with prorating the charges, or this new complexity would be imposed on the transiting carrier.

In proposing flat-rated, capacity-based charges, Frontier apparently assumes that the DS1 facility purchased by an interconnected carrier will only be used to terminate traffic, but not to originate traffic. If that is the case, Frontier would require all carriers to establish less efficient one-way trunks rather than exchange traffic over two-way facilities as is done today. If, however, Frontier intends two-way facilities to continue in use, how would port charges be applied? Would carriers be given prorated discounts based upon the balance of traffic on the facility? How would charges be applied to ports that handle traffic from multiple carriers?

Frontier and CCAP also seem to assume that capacity-based charges would be asymmetric, in that the LEC would not incur any charges for connectivity to other carriers' switches, but would charge other carriers for interconnection with its end offices. To make this a

---

[191] CCAP Comments at 13.

competitively neutral regime, all carriers would need to charge for connectivity to their switches. Such as regime, however, would create substantial complexity of its own. Beyond negotiating the one-way/two-way issue described above, the issues of whether and in what direction compensation would flow would create yet another set of never-ending carrier disputes. Ultimately, in many cases, the system would devolve to a bill-and-keep system. In cases where it did not, it would preserve today's one-way traffic issues, among other intractable problems.

#### 4. Plans that Fail to Provide an Adequate Transition Period Will Harm Consumers and Stifle Competition

There is almost unanimous agreement among commentators that reform of the current system is urgently needed. We are a part of that consensus. Our Plan, however, recognizes that any reform plan that does not provide for a reasonable transition period will disrupt existing network architectures, generate unnecessary expense and place various carriers at an unreasonable competitive disadvantage. While reform is necessary, it is also necessary to provide the industry with sufficient lead time to anticipate the consequences of reform and plan investment accordingly. The Commission should reject calls for radical change in a short period of time as a threat to consumer welfare.

Frontier, for example, advocates an "immediate reform of intercarrier compensation," to adopt its new flat rated port charge concept.[192] A flash change of this magnitude would create chaos within the industry. Current billing platforms are not capable of implementing a flat-rated port charge. Carriers and their system vendors cannot even begin analyzing the changes that would need to be made to existing systems given the lack of detail provided regarding how this proposal would be implemented. Standard alterations in billing

---

[192] Frontier Comments at 16.

platforms take a year or more to implement. A wholesale replacement as proposed by Frontier could take significantly longer.

By permitting intercarrier compensation rates to transition gradually to zero, the ICF Plan protects consumers from unnecessary rate shocks, permits carriers to adjust business plans within reasonable timeframes and provides the Commission an opportunity to react to any unexpected consequences associated with these changes. At the same time, however, the establishment of a detailed and clear plan will provide the entire industry with much needed certainty and clarity for planning and investment purposes.

#### 5. No other Plan Achieves Neutral Default Network Interconnection Rules While Protecting Rural Interests

The majority of interconnection proposals advance rules that provide a particular class of carriers an advantage in the market place. The most blatant example of this strategy is perhaps that proposed by BellSouth. In its proposal, BellSouth suggests that the Commission establish BellSouth's tandems as the default point of interconnection for all carriers, thus relieving BellSouth from any obligation to expend any cost to reach other carrier's networks and ensuring that its switches will remain central to the operation of the PSTN. Once this central bottleneck facility role has been firmly established by regulatory fiat, BellSouth suggests the Commission permit it to assess "market based rates" on carriers that "choose" to exchange traffic with one another through the BellSouth tandem. Verizon suggests a similar plan that would permit it to impose "market based rates" on other carriers that use Verizon's tandems. Such self-serving attempts to establish and then exploit control over bottleneck facilities cannot be taken seriously if the Commission wishes to establish neutral default interconnection rules. The ICF Plan establishes interconnection rules that remain competitively neutral while acknowledging those legitimate issues surrounding rural geography and population density.

### 6. The Rate Benchmarking Proposals Need Further Refinement

Several parties, notably the NARUC Task Force, the Rural Alliance and Qwest, propose rate benchmarking proposals to adjust the amount of recovery from end users vis-à-vis universal service mechanisms depending upon the level of local rates plus interstate and intrastate SLCs.[193] Each of these proposals has a sound basic policy impulse: universal service support should not be used simply to ensure that rates for some carriers are low, but should be tied to some general standard of affordability and reasonable comparability. In general, these parties propose setting the nationwide rate benchmark at 125% of nationwide average rates.

These proposals, however well-intentioned, need further refinement and consideration. In the first instance, these proposals suggest setting a national rate benchmark based on the average of retail rates that currently are not set to reflect underlying costs, rather than historical state rate design practices and implicit support policies such as value of service pricing and traffic sensitive recovery of non-traffic sensitive costs (such as through CCL and TIC or NIC charges).[194] Setting a national benchmark putatively to maintain reasonably comparable rates when rates themselves do not reflect underlying costs would be irrational, and could lead to providing support where it is not necessary to do so or to supporting rural rates to levels that are below the rates charged in many urban areas. For example, according to the Commission's latest

---

193 NARUC Task Force Draft Version 7 at 11 (§ II.8 of proposal); Rural Alliance Comments at 13; Qwest Comments at 7. Qwest's proposal would examine the weighted average of residential and business local rates, plus the interstate and intrastate SLCs. *Id*.

194 By contrast, the Commission has almost entirely eliminated the federal CCL charge, and has also eliminated the federal Transport Interconnection Charge for both price cap and rate-of-return carriers. *See Calls Order*, 15 FCC Rcd at 12962 (¶ 161); *Multi-Association Group (MAG) Plan for Regulation of Interstate Services of Non-Price Cap Incumbent Local Exchange Carriers and Interexchange Carriers*, CC Docket No. 01-304, Second Report and Order in Further Notice of Proposed Rulemaking in CC Docket No. 00-256, Fifteenth Report and Order in CC Docket No. 96-45, and Report and Order in CC Docket Nos. 98-77 and 98-166, 16 FCC Rcd 19613, ¶¶ 98-104 (2001) ("MAG Order").

urban rate survey, a national average rate for unlimited residential touchtone service was $24.31, including local service fees, interstate and intrastate SLCs, additional fees, and local, state, and federal taxes. Thus, a benchmark of 125% of the national average in that survey would be approximately $30.39.[195] However, this would set the national benchmark at a level below the rates charged in New York City, Buffalo, Richmond, and Milwaukee, with Boston, Providence, and Atlanta close to the benchmark.[196] It is difficult to see why this makes sense, rather than, for example, allowing rates below a certain level to rise to cost-based rates, and then testing for reasonable comparability.

Second, the proposals in the record wholly ignore affordability, focusing solely on reasonable comparability, in violation of the 10th Circuit's decision in *Qwest II*.[197] The Tenth Circuit admonished the Commission that it must consider all the principles listed in Section 254(b), including Section 254(b)(5) and (e), not just the principle of reasonable comparability.[198]

There is little evidence that even the highest retail rates offered today are unaffordable. Wyoming's rates for its lowest priced area, for example, exceed all but two of the rates reported in the Commission urban rates survey.[199] However, Wyoming's subscribership

---

195 Industry Analysis and Technology Division, Wireline Competition Bureau, *Reference Book of Rates, Price Indices and Household Expenditures for Telephone Service*, Table 1.3 (rel. May 25, 2005).

196 *Id*.

197 *Qwest Comm. Int'l, Inc. v. FCC*, 398 F.3d 1222 (10th Cir. 2005).

198 *Id.* at 1234.

199 Qwest Wyoming's retail residential rates, including SLCs, fees and taxes, range from $33.14-$42.28, depending on the rate zone. *See* Joint Petition of the Wyoming Public Service Commission and the Wyoming Office of Consumer Advocate for Supplemental Federal Universal Service Funds for Customers of Wyoming's Non-Rural Incumbent Local Exchange Carrier, CC Docket No. 96-45, at 10 (filed Dec. 21, 2004).

level (in unit) as of March 2005 is 94%, above the nationwide average of 92.4%.[200] This is true across all income groups. Wyoming's telephone subscribership in 2004 exceeded the national average in *every income group*, including low income groups.[201]

Third, benchmarking off of current rates using the Commission urban rates survey would allow a handful of large states disproportionately to set national policy through their rate design decisions, based solely on the sheer number of lines involved. If the benchmark were based on a national average (as current proposals would do), then the rate design decisions of these states would have outsized influence on the national result. This is particularly troubling in light of the fact that, in many states, end user rates are not necessarily based on the underlying cost of providing service. Moreover, as discussed above, these rates may not reflect any realistic assessment of affordability, and a benchmark based on their average will not necessarily ensure reasonable comparability of rates nationwide.[202]

Fourth, the benchmarking proposals in the record wholly ignore payments that some customers receive because they are subscribers. Cooperatives, for example, make rebate payments to their members, who are, by definition, the cooperative's customers. One recent report cited an example of a cooperative whose customers paid an average rate of $206 annually

---

200 Industry Analysis and Technology Division, Wireline Competition Bureau, *Telephone Subscribership in the United States (Data through March 2005)*, at Table 3 (rel. May 25, 2005).

201 Industry Analysis and Technology Division, Wireline Competition Bureau, *Telephone Penetration by Income by State (Data through March 2004)* at Table 4 (rel. March 10, 2005).

202 *Qwest*, 398 F.3d at 1236 ("By designating a comparability benchmark at the national urban average plus two standard deviations, the FCC has ensured that significant variance between rural and urban rates will continue unabated."); *Qwest Corp. v. FCC*, 258 F.3d 1191, 1202 (10th Cir. 2001) ("[T]he FCC has failed to explain how its 135% benchmark will help achieve the goal of reasonable comparability or sufficiency.").

in local phone fees, but which paid each of those customers $375 in earnings rebates.[203] These payments should not be ignored when calculating the cooperative's real rate to the customer.

Fifth, the Commission, if it employs a benchmark, must be very careful in the manner in which it defines the benchmark. As the NARUC Task Force recognizes in Version 7 of its draft proposal, separate benchmarks may be necessary for residential and business services (or alternatively benchmarks should be applied only to residential service offerings).[204] Furthermore, as more and more plans are offered in bundles, it will become more and more difficult to determine the "local" rate as distinct from the price of other components in the bundle. This is especially true as states deregulate bundled service packages, as many states have done or are contemplating.

Finally, the Commission must recognize that its existing urban rate survey provides a very limited—and possibly skewed—data set. If it seriously contemplates use of a benchmark, the Commission should consider developing a more robust means of determining the level of local rates.

Given these obstacles, and the critical need for immediate reform, we believe that the Commission should not delay comprehensive intercarrier compensation reform in order to establish a benchmark. We devoted substantial effort to this issue and were unable to develop an operational solution that solved more problems than it created. Accordingly, without minimizing the concerns underlying benchmark proposals, we believe that the delay that would accompany any effort to implement such proposals would far outweigh the limited benefits to be gained.

---

203 P. Davidson, "Fees Paid by All Phone Customers Help Rural Phone Firms Prosper", *USA Today* at 1B (Nov. 16, 2004) (discussing the example of XIT Rural Telephone Cooperative).

204 NARUC Task Force Draft Version 7, at 8 (§ II.5.a.ii of proposal).

## VII. CONCLUSION

The ICF Plan offers a comprehensive solution that achieves all the Commission's goals. The Plan will create a stable environment for competition that will facilitate the development and implementation of innovative technologies while significantly increasing consumer welfare. We urge the Commission to adopt the ICF Plan in its entirety and without delay.

Respectfully submitted,

THE INTERCARRIER COMPENSATION FORUM

Gary M. Epstein
Richard P. Bress
Richard R. Cameron
Alexander Maltas
LATHAM & WATKINS LLP
555 Eleventh Street, N.W., Suite 1000
Washington, D.C. 20004
(202) 637-2200

July 20, 2005

*Attorneys for the Intercarrier Compensation Forum*

# Attachment A

# Economic Benefits from Reform of Intercarrier Compensation

**Authored by ICF Economist Representatives:**

**Richard N. Clarke – AT&T**

**Thomas J. Makarewicz – SBC**

**Brian K. Staihr – Sprint**

**20 July 2005**

# TABLE OF CONTENTS

1 OVERVIEW ..... 1

2 BACKDROP ..... 2

2.1 Compensation cost disparities ..... 5

2.2 Compensation fee disparities ..... 6

3 ECONOMIC IMPACT OF INTERCARRIER COMPENSATION REFORM ON WIRELINE CUSTOMERS ..... 7

3.1 Implicit vs. explicit support for universal service ..... 7

3.2 Measuring welfare gains to wireline consumers ..... 9

3.3 Results for wireline customers ..... 12

3.4 This analysis understates the benefits to wireline customers ..... 12

3.5 Who gains, who loses among wireline customers? ..... 13

4 ECONOMIC IMPACT OF INTERCARRIER COMPENSATION REFORM ON WIRELESS CUSTOMERS ..... 14

5 COMBINED RESULTS – INCLUDING USF COLLECTIONS REFORM ..... 18

6 WIDER INFLUENCE ON TECHNOLOGICAL PROGRESS ..... 20

6.1 Evolving cost structure in telecommunications ..... 20

6.2 Evolving usage of telecommunications ..... 23

6.3 Growth of VoIP ..... 24

6.4 Larger economic benefits ..... 25

7 PLAN TO IMPROVE INTERCARRIER COMPENSATION ..... 25

8 SUMMARY ..... 26

# 1 Overview

As communications technologies and demand evolve, the need to reform intercarrier compensation structures grows more and more acute. From an economics point-of-view, markets operate most efficiently and provide the greatest amount of consumer benefit when the *price* structures and levels faced by carriers and customers match closely the *cost* structures and levels of the technologies and other inputs required to produce the communications service. The purpose of this paper is to examine the current and evolving character of demand, prices and costs in telecommunications to evaluate the effects of intercarrier compensation reform on economic performance, technological progressiveness and customer benefits in the telecommunications industry. We find that intercarrier compensation reform as proposed by the Intercarrier Compensation Forum ("ICF") will provide significant economic benefits on all of these accounts.

This analysis begins by explaining the current structures used to compensate carriers when communications are transferred between networks. We first introduce the concept of *economic cost* for intercarrier compensation and then examine how faithfully current compensation structures reflect these economic costs. Emphasis is placed on recounting the extreme rate disparities that exist in current structures. After explaining why these disparities lead to inefficient performance of telecommunications markets, the paper then turns to quantifying some of the consumer welfare benefits that could be gained if the intercarrier compensation structure proposed by the ICF were used as a substitute for today's inefficient compensation structure. This welfare gain analysis is performed separately for wireline and wireless telecommunications. These gains are then summed to determine a lower-bound estimate of the welfare benefits that the ICF plan would provide from these two largest segments of the telecommunications industry.[1] Once the phase-in of the intercarrier compensation and universal service fund ("USF") collections reform portions of the ICF plan is complete, the *annual* increase in consumer welfare for just these two segments amount to over $7.2 billion per year. Benefits to the overall economy are likely more than twice this figure. Calculated across the proposed eight-year life of the plan, consumer benefits within the wireline and wireless industry segments would amount to over $44 billion. Additional beneficial effects on the overall economy are likely to exceed $61 billion – yielding a total positive impact of over $105 billion. Of these benefits, roughly 40% derive from reform of

[1] These estimates represent a lower-bound because their calculation is restricted to those derived directly from demand stimulation. To the extent that intercarrier compensation reform improves other aspects of telecommunications performance, total benefits are even larger. Some of these further improvements are outlined later in the paper.

interstate compensation mechanisms and 60% derive from reform of intrastate compensation mechanisms.[2]

After developing these overall welfare benefit figures, the analysis examines more granularly how these benefits will be distributed over different customer classes. It then discusses how the general competitiveness and technological progressiveness of the telecommunications industry may also have been negatively impacted by today's uneconomic structure for intercarrier compensation. The analysis explains how reforms in this structure should additionally be able to improve industry performance on all of these accounts and provide economic benefits that go far beyond those quantified in the demand stimulation analysis presented here.

## 2 Backdrop

Hundreds of billions of bits traverse the nation's telecommunications networks every second of every day. These bits carry everything from plain old voice signals between telephones, to data signals between computers or video signals between cameras and screens. While in years past, each of these types of signals may have been carried on separate specially designed networks, it is the genius of modern digital technology that permits each of these signal types to be reduced to interchangeable digital bits, and all carried together on merged extremely high capacity networks.

But because the U.S. contains roughly 110 million households, 300 million people and 11 million businesses, there is no single network that physically reaches and links together all of these customers. Instead, to encourage competition and economic diversity, we have a network of networks. Some of these networks are primarily local or regional wireline networks such as those owned by BellSouth or Verizon. Others are wireline primarily long distance networks such as those owned by AT&T or MCI. And still others are wireless networks owned by carriers such as Cingular or Sprint. While all of the above-named networks are large and well-known, there are literally hundreds of other networks, both large and small, in each of these service categories. For instance, there are over one thousand incumbent local exchange networks – the bulk being small

[2] While most of the economic gains arise from reform of intercarrier compensation mechanisms, a significant amount of the welfare benefits come from reform of the funding mechanism for universal service from its current ad valorem basis to a lines or connections basis. These USF-reform benefits amount to over $120 million per year – or nearly $1 billion over the eight year life of the ICF reform proposal.

rural networks.[3] There are also several hundred lesser known long haul providers such as WilTel and Level(3); and several hundred competitive local carriers, such as Covad or McLeodUSA.[4]

While this diversity of networks is a source of great strength to the competitiveness and quality of U.S. telecommunications, it also presents a great technical and economic challenge. When there are multiple networks, it is unlikely that the customer for whom a communication is destined is a subscriber to the same network as serves the originating customer. Thus, for a communication to pass between these two customers, it must traverse several interconnected networks. For example, long distance calls typically are originated on the network of one local carrier, transferred to the network of a long distance carrier and finally transferred to the network of a second local carrier that serves the destination customer. Similarly, calls from a wireless customer to a wireline customer must pass from the originating customer's wireless network to the wireline local network that serves the terminating customer. While this connection may be direct, it is also possible that the call may need to pass through intermediate long distance or transit local networks before reaching the local network of the destination customer.

These various call paths are illustrated in Figures 1 and 2. Figure 1 depicts three traditional types of call origination and termination.[5] Origination may be from a wireless caller A, from a traditional wireline telephone B, or from a wireline dialup-connected computer C. In the case of originator A, this traffic passes out of the originating network through a tandem switch or may also pass directly from the originating mobile switch to another carrier's mobile switch (dashed line). Originator C is served by an end office switch that connects directly out of the originating network. Calls may then pass through a transiting network (solid line) or directly into the terminating customer's local network (dashed line). Once in the terminating network, they may travel directly to the terminating end office, or reach this end office via a tandem switch. Calls are depicted to terminate via a tandem to a wireless customer D or to a wireline telephone E, or terminate directly to the end office serving an Internet service provider's ("ISP") modem bank F.

---

[3] *See* Federal Communications Commission, *Universal Service Monitoring Report*, October 2004, Tables 3.22 and 3.24 (hereafter, "*Monitoring Report*"). Available at: http://www.fcc.gov/Bureaus/Common_Carrier/Reports/FCC-State_Link/Monitor/mr04-0.pdf .

[4] *See* Federal Communications Commission, *Telecommunications Provider Locator*, February 2004, Table 1. Available at: http://www.fcc.gov/Bureaus/Common_Carrier/Reports/FCC-State_Link/Locator/locat03.pdf .

[5] This diagram is not intended to depict flows associated with VoIP calls.

Figure 2 simplifies Figure 1 by focusing strictly on the intricacies of call termination. The originating or transit network is indicated by the oval on the left side of the figure. Traffic exits these networks and enters the terminating network via either a local wireline carrier's tandem switch, or directly to an end office switch operating by the terminating local carrier. Incremental "termination" costs associated with the traffic consist of several components. First, they consist of the incremental costs associated with end office switching. Second, if the call enters the terminating network via a tandem, these termination costs include those associated with tandem switching and common transport from the tandem to the end office. If the call enters the terminating network via a direct trunk from the delivering network to the customer's end office, these termination costs include those of this direct trunk transport. Both of these patterns are illustrated in Figure 2.

For simplicity' sake, the term "transport" in this paper will refer both to the combination of tandem switching and transport from the tandem to the end office or to direct trunks linking to the end office. The term "termination" will refer to the complete amalgam of transport and end office switching as it may be used in terminating a call. Thus, in the balance of the paper the terms "termination" and "transport and termination" will be used interchangeably.

The use of networks to originate and terminate calls is not "free." Networks cost money and resources to build and maintain. Thus, network owners need to collect funds – from their own end users, universal service or interconnected carriers – to compensate for the incremental costs associated with the use of their networks. Such use may occur on both the originating and terminating end of a call. Nearly all intercarrier communications currently pay "compensation" to the owner of the local network serving the destination customer for the transport and termination of the call. While it would be convenient if, consistent with the current U.S. wireline communications business regime of "calling party pays," the terminating network could bill directly the originating customer for the transport and termination services used by the call, this is difficult. As the communication travels further and further away from the originating customer's network, the ability of the terminating carrier to bill the originating customer grows more and more tenuous, thus the ability of the terminating carrier to collect its compensation directly from the originating customer is extremely dim. As a result, U.S. telecommunications policy generally allows terminating carriers to bill compensation fees for their termination services to the carrier with the customer originating the communication.

Because all terminating carriers generally enjoy a bottleneck position of control over terminating access to their customers, regulators have imposed limits on the

compensation fees they may assess. Unfortunately, due to balkanization of jurisdictional authority across different regulators and a wide selection of social, economic and political goals, these fee limits vary greatly. Rather than reflect simply the relative cost of transmission, these fee variations track a multiplicity of factors that divide into four general categories: regulatory jurisdiction, identity of carrier, network technology employed and character of the bits transmitted.

In addition to the disparate practices for collecting terminating compensation, there are even more disparate practices used for recovering origination costs. For example, origination fees are charged when access charges apply, but under reciprocal compensation the originating carrier does not charge for origination and it pays for termination. Under current market structures, these multiple compensation regimes can only be competitively neutral if: (1) there is a definitive and consistently drawn line applied to all providers as to when a call is subject to a particular regime and evasion is impossible; and (2) the regulator can ensure that the compensation rate for all providers is set precisely correctly – neither too high or too low. If either of these conditions is not satisfied, the operation of the multiple regimes cannot be competitively neutral. Of course, the solution to this regulatory and competitive dilemma resulting from today's multiplicity of compensation regimes is for originating and terminating local carriers to recover their costs directly from fees paid by their end users.[6]

## 2.1 Compensation cost disparities

Most significantly for economics, these fee disparities – both among different fees for essentially the same service as well as their general divergence from cost – are substantial. As a result, the negative effects of these fee disparities on customer welfare and market performance are profound. As a point of comparison, the *rates* charged for these essentially identical services may range from zero to over 35 cents per minute – even though their underlying economic costs are much less disparate.

One reason the economic costs of call termination are confined to a rather tight range is that many of the accounting "costs" associated with local networks do not factor into a determination of the *economic* cost of call termination that should guide appropriate rate-making. For example, while it is true that a carriers' total network costs can vary widely depending on the character of its service area (*e.g.*, dense, sparse, mountainous, *etc.*), most of these cost differences are irrelevant for determining the appropriate level of compensation charges. This is because economics teaches that such

---

[6] To the extent that the provision of "equal access" to multiple long distance carriers imposes continuing extra costs on the originating local carrier, these costs are also most neutrally collected directly from the beneficiary end users.

charges should reflect the *incremental* costs of transporting and terminating a call. Costs that are fixed or do not vary with the termination of an additional minute or call are not appropriately loaded into a per-minute or per-call rate for termination. Because the lion's share of the costs that differ across carriers are non-incremental costs associated with customer loops or port investment on end office switches, differences in pertinent incremental costs across carriers tend to be rather modest.

But even fees that differ among carriers by amounts that reflect accurately legitimate differences in economic costs may create competitive problems. A major reason is the requirement of Section 254 (g) of the Telecommunications Act of 1996 that the "rates charged by providers of interexchange telecommunications services to subscribers in rural and high cost areas shall be no higher than the rates charged by each such provider to its subscribers in urban areas" and that "a provider of interstate interexchange telecommunications services shall provide such services to its subscribers in each State at rates no higher than the rates charged to its subscribers in any other State.[7]

While such legislative fiats demanding averaged toll rates may be enforceable in a regulated monopoly environment without intermodal competition, they are commercially unsustainable in a competitive environment. Carriers of certain types are under no obligation to serve rural areas in addition to urban areas, or are under no obligation to serve customers in all states. Such carriers may choose to provide service in only lower-cost states or urban environments – and price their services to reflect these lower costs. It then becomes commercially impossible for a different carrier that provides service in a mix of high and low cost environments using averaged pricing to compete successfully against this first carrier. Thus, any competitively sustainable structure for intercarrier compensation must be one that results in compensation rates that are harmonized across different carriers and regions.

## 2.2 Compensation fee disparities

Without even accounting for rate variation among individual carriers within a particular category, compensation fee disparities are enormous. Large carrier interstate terminating access is charged at about 0.6 cents per minute, while small carrier interstate terminating access rates approach 2 cents. Large carrier intrastate terminating access rates are just over 2.5 cents, small carrier intrastate terminating access rates exceed 5 cents. Local reciprocal compensation rates are in the 0.15 cents per

---

[7] 47 U.S.C. Section 254 (g).

minute range, but may approach zero under bill-and-keep.[8] Whether wireless carriers pay reciprocal compensation fees or access charges depends on whether calls remain within a Major Trading Area ("MTA") and whether the terminating local carrier is rural or not. Rates further depend on whether the transmitted signal is for voice or data, whether it was originated and/or transmitted in analog or digital format, and whether it is bound for a wireline local carrier network, a wireless carrier network or an ISP. This crazy quilt of rates is illustrated in Figure 3. Average rates within a category are given by the column bars, error "whiskers" extend up and down from the average values indicating the underlying across-company range in values. Although the chart's upper scale is truncated at 10 cents per minute, certain small carrier termination rates may range up to 35 cents per minute.

It is both the generally high levels of these compensation fees in addition to their disparities across different types of carriers, different types of calls and different technologies that gives rise to substantial economic inefficiencies. The following sections of this paper will present and quantify just a small selection of these inefficiencies that could be remedied by a more economically-rational structure for intercarrier compensation, both for wireline customers (Section 3) and for wireless customers (Section 4). Further sections will elaborate on the still larger set of economic benefits that these reforms may enable.

# 3 Economic impact of intercarrier compensation reform on wireline customers

## 3.1 Implicit vs. explicit support for universal service

Although the clear intent of the Telecommunications Act of 1996 was that implicit support be removed from telecommunications prices and made explicit through "specific, predictable, and sufficient Federal and State mechanisms to preserve and advance universal service,"[9] accomplishing this feat has been challenging. Existing pricing in telecommunications is built from a complex web of implicit support flows designed to encourage universal service. Among current implicit support are flows from: (1) toll to local; (2) business to residential customers; (3) high density urban to low

---

[8] See filing by the Intercarrier Compensation Forum in *Developing a Unified Compensation Regime* in CC Docket No. 01-92, October 5, 2004.

[9] See, 47 U.S.C. Section 254 (b) (5) and (e); and also *Telecommunications Act of 1996,* "Joint Explanatory Statement of the Committee of Conference," Section 254, p. 131, which reads: "[t]o the extent possible, the conferees intend that any support mechanisms continued or created under new section 254 should be explicit, rather than implicit as many support mechanisms are today."

density rural areas; and (4) discretionary services to basic local service. Essentially, interservice subsidies have proliferated so that the basic local rates of all subscribers, regardless of need, are kept artificially low. The stated explanation for the use of these support flows to keep basic local rates as low as possible is to maximize telephone subscribership.

Economists have long decried efficiency losses resulting from this pricing structure, calling for reform through "more intelligent" pricing.[10] The argument has been extended by Kaserman and Mayo who contend that, in addition to the efficiency losses that derive directly from repressed demand for the services providing the implicit support, existing support flows "also create a pattern of subsidization that does not consistently promote universal service or equitable pricing."[11] But what is the price of inefficiency? Shouldn't we tolerate a little inefficiency, especially if it has even a possibility of attracting more subscribers to and keeping them on the public switched network by keeping basic local service affordable?

Telecommunications pricing intentionally yet inefficiently relies on extensive interservice support in an effort to maintain a universally available local exchange network at reasonable rates.[12] At the focus is a system that recovers large portions of its costs not from those who demand access to the telephone network, but from the interexchange carriers ("IXCs") – and ultimately from users of long distance – through access charges paid to local telephone companies for use of their facilities. But most costs associated with providing customer access to the universally-available telephone network are incurred by the local exchange carrier ("LEC") regardless of actual network usage. The LEC bears those same costs if the customer places a thousand calls or places zero calls.[13] The resulting indiscriminate cross-subsidy was mandated in a near-monopoly environment to keep local rates as inexpensive as possible and encourage universal telephone service. In other words, consumers, regardless of need, were to receive local service at artificially low rates and pay artificially high rates for interstate toll or other discretionary services. But was this efficient or effective?

---

[10] Alfred E. Kahn, "The Road to More Intelligent Telephone Pricing," 1 *Yale Journal on Regulation* 140 (1984); also Kahn, "Straight Talk About Local Rates," *Telephony* April 15, 1985.

[11] David Kaserman and John Mayo, "Cross Subsidies in Telecommunications: Roadblocks on the Road to More Intelligent Telephone Pricing," 11 *Yale Journal on Regulation* 119 (1994), p. 143.

[12] For a thorough description of cross-subsidies in telecommunications see Kaserman and Mayo, as well as Peter Temin, "Cross Subsidies in the Telephone Network After Divestiture," *Journal of Regulatory Economics,* Vol. 2 (Dec. 1990), pp. 349-62.

[13] Steve G. Parsons, "The Economic Necessity of an Increased Subscriber Line Charge (SLC) in Telecommunications," 48 *Administrative Law Review* 227 (Spring 1996), pp. 234-35.

Econometric studies "find that the probability of having a telephone is sensitive to price, but a sensitivity that in the aggregate is quantitatively small."[14] By comparison, the own price elasticity for long distance service is relatively high. Historically, the toll-to-local subsidy has resulted in efficiency losses in the billions of dollars.[15] One aim of the ICF plan is to reverse those efficiency losses. The standard of "first-best" optimal quantities is most closely approximated through the second-best path of lowering prices for elastically demanded toll service, and raising prices for inelastically demanded local service (via increased subscriber line charges ("SLCs") and universal service fund charges). As Parsons points out,

> "...a dollar of contribution toward common costs garnered through an increase in the SLC leads to a very minor deviation in the quantity demanded away from the optimal quantity; however, a dollar obtained through switched access charges and higher long distance rates leads to a relatively large divergence in the quantity demanded away from the optimal quantity."[16]

Recovering the cost of switched access through federal end-user charges makes possible dollar-for-dollar reductions in LEC access charges to IXCs. Since LEC access charges account for a sizable portion of the IXCs' cost of providing long distance service, substantial reductions in this principal cost of production create the opportunity for commensurate reductions in long distance prices. Such reductions, should they occur, would create consumer gains and, as Hausman et al. demonstrate, actually would enhance telephone subscribership.[17] Similarly, recovering the cost of local call termination through end-user fees rather than from possibly in-excess-of-cost carrier reciprocal compensation charges should result in similar consumer welfare gains.

## 3.2 Measuring welfare gains to wireline consumers

How much would consumers gain by mitigating the welfare losses associated with the existing pricing structure of intercarrier compensation? Consumer surplus increases, here used to refer to the area to the left of a product's demand curve lying between the relevant price horizontals, measures the gain. The objective is to isolate the net gain in consumer surplus resulting exclusively from lower long distance prices brought about by the lower access prices that would result from adoption of the ICF

---

[14] Lester D. Taylor, Telecommunications Demand in Theory and Practice, Boston: Kluwer Academic Publishers, 1994, p. 125.

[15] J. Hausman, T. Tardiff, A. Belinfante, "The Effects of the Breakup of AT&T on Telephone Penetration in the United States," 83 *American Economic Review* 178 (1993), p. 183.

[16] Parsons at 239.

[17] Hausman, Tardiff, and Belinfante at 179.

plan.[18] This gain in consumer surplus must be offset against the increased end user charges that the ICF plan would have borne by wireline subscribers to calculate overall net gains.[19] Figure 4 displays the consumer surplus measurement.

From Figure 4, Area A represents the "gain" to consumers of purchasing the same amount of wireline toll minutes as presently, but at a lower per minute price brought about by implementation the ICF plan's transition to bill-and-keep. But in addition to these lower toll payments, lower wireline toll prices will stimulate an increase in toll usage. Area B represents the increased value to consumers realized from purchasing more wireline toll minutes at the now lower price per minute.

Known variables for the wireline consumer benefit analysis are:

- Current average per incremental minute wireline toll price, $P_{current}$, is approximately $0.05.[20]
- Current wireline toll minutes, $Q_{current}$, are approximately 582 billion derived from data reported to the FCC and NECA.
- The post-ICF plan per minute wireline toll price, $P_{proposed}$, of $0.0327 will be realized after the fourth year of the ICF plan's implementation. The wireline toll reduction assumes complete flow through of switched access reductions of $0.0173 per conversation minute. Access reductions per conversation minute were calculated by the ICF Task Force. This analysis assumes that these switched access reductions will be phased in evenly over four years.
- The price elasticity of demand for wireline toll, $\beta$, is assumed to be -0.72. This measure applies to all wireline long distance – interstate and intrastate, business and residential. It falls in the middle of the range of historic interstate toll price elasticities.[21]

---

18 This general approach to quantifying gains in consumer surplus were used by T. Makarewicz in "Efficient Telecom Pricing: Who Stands to Benefit?" *Public Utilities Fortnightly*, March 15, 1996, pp. 26-28.

19 A similar but simplified form of this welfare analysis has also been used in a *Comment* filed by the Regulatory Studies Program of the Mercatus Center at George Mason University in the Federal Communications Commission's CC Docket No. 01-92, May 23, 2005.

20 This figure is an average of residence and business per-minute rates and is intended to represent the incremental retail price of a minute of toll calling. Note that is not intended to include the flat monthly charges (e.g., $3.95) that an IXC may levy in addition to its per-minute charges and does not include universal service assessments. Thus, this figure should generally be significantly less than the gross average revenue per minute figures reported by the FCC in Table 13.4 of its *Trends in Telephone Service*, June 21, 2005. Available at: http://www.fcc.gov/Bureaus/Common_Carrier/Reports/FCC-State_Link/IAD/trend605.pdf .

21 Consensus estimates of the elasticity for long distance service are in the neighborhood of -0.7; see M. H. Riordan, "Universal Residential Telephone Service," in Martin E. Cave, Sumit K. Majumdar, and Ingo Vogelsang (eds.), *Handbook of Telecommunications Economics, Volume 1*

These known input values allow us to solve for the constant, A,[22] and the post-ICF plan toll minutes, $Q_{proposed}$.[23] Using these parameter values, we can estimate welfare gains from the ICF price reductions.

Clearly consumers are better off by having to pay less for the same amount of long distance usage; this comprises the bulk of the consumer surplus improvement. As stated earlier, Area A, simply calculated as $(P_{current} - P_{proposed})(Q_{current})$, represents the bill savings enjoyed by consumers purchasing an unchanged amount of toll usage at its new lower price per minute. In addition, consumers find long distance service to be a better value at its new lower unit price, so they buy more minutes according to their price elasticity of demand (β). Though the consumer's total toll bill might increase due to their choice to purchase more lower-priced toll minutes, Area B mathematically captures the gain in value consumers derive from their additional toll purchases.

From the demand equation, $Q = AP^{\beta}$, it follows that

$$P = (Q/A)^{1/\beta}. \tag{1}$$

Substituting for P, Area B is derived as follows:

$$Area\ B = [A^{-1/\beta} \int_{Q_{current}}^{Q_{proposed}} Q^{1/\beta} dQ] - [(Q_{proposed} - Q_{current})(P_{proposed})] \tag{2}$$

Completing the integration in the above expression renders:

$$AreaB = [A^{-1/\beta}] \left[ (Q_{proposed}^{(1+1/\beta)}) - (Q_{current}^{(1+1/\beta)}) \Big/ (1 + 1/\beta) \right] - [(Q_{proposed} - Q_{current})(P_{proposed})] \tag{3}$$

Thus, the total gain in consumer surplus measures the net bill reduction from a static amount of toll purchased at the lower price per unit (Area A), plus the increased value from greater toll use prompted exclusively by the reduced unit price for toll (Area B).

---

(Amsterdam: Elsevier, 2002), p. 436. See also Jerry Hausman and Howard Shelanski, "Economic Welfare and Telecommunications Regulation: The E-Rate Policy for Universal-Service Subsidies," *Yale Journal on Regulation* 16 (Winter 1999): 36-37; and L. Taylor, Telecommunications Demand: A Survey and Critique, Cambridge, MA: Ballinger Publishing, 1980, p. 99.

22 $A = Q/P^{\beta}$

23 $Q_{proposed} = AP_{proposed}^{\beta}$.

For wireline subscribers, we subtract from these estimated gains in consumer welfare the phased-in increased end user charges (SLC and USF charges) that wireline consumers would experience as companion provisions of the ICF plan.[24] The resulting amount is the net gain in consumer welfare flowing from the combination of lower toll prices and increased end user charges.

## 3.3 Results for wireline customers

The analysis shows that the total nationwide incremental improvement in consumer surplus for wireline customers from the ICF plan reaches $2.4 billion per year upon completion of the plan's switched access rebalancing. *That is, by the end of the plan's rebalancing phase-in, wireline customers will experience an annual net consumer welfare gain of $2.4 billion – which will continue for the remaining years of the plan.*[25] This translates to an average monthly net welfare gain of $1.88 per subscribing wireline household once rebalancing is complete. Of these gains, 37% are due to reform of interstate access charges and 63% are due to reform of intrastate access charges. Figure 5 shows annual, monthly, and cumulative impacts to wireline subscribers for each year of the ICF plan. Over the complete eight year horizon of the ICF plan, cumulative consumer benefits will be $13.5 billion, or $127 per household.

## 3.4 This analysis understates the benefits to wireline customers

The net gains in displayed in Figure 5 represent the lower bound of likely consumer welfare gains for several reasons. First, though the wireline analysis assumes demand stimulation due to wireline toll price decreases, it factors in no growth in subscribing households. To the extent that subscribing households increase, they would consume wireline toll at lower prices, adding to gains in consumer surplus above and beyond those displayed in Figure 5. Second, the welfare gains in Figure 5 presume full pass-through of increased end-user charges to local wireline consumers. It remains to be seen if the market will allow local wireline providers to pass-through the full amount of scheduled end user charge increases. To the extent that competitive market pressures prevent the complete pass-through of end user charge increases, the consumer benefit gains for wireline subscribers will be higher (perhaps substantially) than those identified in this analysis.

---

[24] As will be described below, the analysis assigns all necessary USF charge increases to wireline customers; in reality the USF increases will not be borne exclusively by wireline customers but shared by other customer segments.

[25] Step 5 results in small negative consumer gains because it contains no access/toll reductions, yet there will be residual end user charge increases from companies whose current SLC charges are below allowed caps.

Third, the analysis above makes a simplifying assumption that because the elasticity of demand for basic access is so low, the impact of the increase in subscriber line charge causes only an immeasurably small number of customers to forgo wireline service.[26] While assuming a positive elasticity for local access lines would mitigate our measured consumer welfare gains, this mitigation should be very small. In reality, it is likely that many of these wireline customers would simply opt for other forms of access to the public switched network (for example, access through a VoIP or wireless provider) that do not charge a subscriber line charge. Such a demand response would simply shift the welfare gain from wireline subscribers to subscribers of the newly chosen form of local access.

Finally, the analysis assumes increased USF collections from switched wireline customers sufficient to compensate eligible carriers for their access fee losses. To the extent that some of these increased USF collections will come from wireless or other telecommunications customers, actual switched wireline USF collections will be less and wireline customer benefits will be larger than those quantified here.

## 3.5 Who gains, who loses among wireline customers?

Note that every customer may not match exactly this national profile. Thus, it is possible that certain customers may benefit more than other customers from the outlined move toward pricing efficiency. Because a customer benefits when his gain from lower long distance prices more than offsets his end user charge increase; the more long distance a customer uses, the greater that customer benefits. But in reverse fashion, if a customer uses very little long distance, that individual customer may end up not benefiting. Notably, the potential benefit for higher wireline toll users really has no ceiling, while the amount of "loss" for lower users of wireline toll is bounded by the amount of the end user charge increases.

One customer segment of particular concern is low-income subscribers. A vital provision of the ICF plan waives increases in end-user charges for Lifeline subscribers. Under the ICF plan, qualifying low-income subscribers will be protected from end user charge increases even as they receive the full benefit of lower wireline toll rates. Tariff data indicate that Lifeline subscribers currently pay about $10 monthly for basic local service, with no associated charges for SLC or federal USF. Lifeline subscribers who use a "medium" amount of toll spend another $6.00 per month, plus about $0.40 for the associated federal USF charge. Thus, the total local and toll payment for Lifeline

---

[26] See Robert W. Crandall and Leonard Waverman, *Who Pays for Universal Service?* (Washington, DC: Brookings, 2000), p. 91 for a discussion as to why local network access reflects nearly zero elasticity.

"medium" toll users is $16.40. Under the ICF plan, the local payments for these Lifeline subscribers would be unchanged due to the SLC and USF charge exemption. However, their $6.00 monthly toll payment would fall to about $4.60 and the $0.40 federal USF charge would be waived, resulting in a post-plan total bill of about $14.60. Thus, Lifeline subscribers who use a "medium" amount of toll would experience a net monthly total bill reduction of approximately $1.80 due to being exempt from increased end user charge increases while benefiting from toll price reductions. Of course, Lifeline subscribers who use more than a "medium" amount of monthly toll would realize greater savings, while those using less toll would realize less (or no) savings. [27]

The welfare gains estimated for wireline customers are consistent with research conducted examining the effects of past increases in the federal SLC charge. For example, customer telephone spending patterns indicate that net "gainers" represent a substantial portion of all customers. In a consumer expenditure survey, economist Frank Wolak's model showed that a similar type of price rebalancing proposal "appears to result in net consumer gains to the majority of households in our sample."[28] Crandall concludes that though the overall effect of telephone repricing on income distribution has been mildly regressive, the shifts in burden have been very small – less than 0.1 percent of income for each income class.[29] Finally, a Southwestern Bell study that examined actual customer bill data indicated that about 45 percent of Southwestern Bell residential customers have experienced a net bill reduction under early implementation of the SLC program. Most of those who did not realize a net bill reduction saw only minor increases.[30]

## 4 Economic impact of intercarrier compensation reform on wireless customers

The same inefficiencies that characterize wireline pricing also exist in the pricing of wireless service. Because wireless carriers also pay access charges on many calls, the same cross-subsidization – higher access charges subsidizing lower local wireline rates – exists, and the prices that customers pay for wireless service reflect these access charges. Accordingly, the estimated impact of the ICF plan on wireless customers can be

---

[27] These values are generally derived from the "Customer Impact Deck" attached to the ICF Reply Comments at Attachment B.

[28] Frank Wolak, "Can Universal Service Survive in a Competitive Telecommunications Environment?," *Information Economics and Policy*, (cited from February 1996 draft, p. 36).

[29] Robert W. Crandall, After The Breakup: U.S. Telecommunications in a More Competitive Era, (Washington, DC: Brookings Institution) 1991, p. 15.

[30] A. Larson, T. Makarewicz and C. Monson, "The Effect of Subscriber Line Charges on Residential Telephone Bills," 13 *Telecommunications Policy* 337 (1989).

determined by replicating the process outlined above using wireless calling data, but with three major modifications.

First, in the wireline analysis presented above the offsetting welfare effects of the increase in SLC and USF collections were netted against the welfare gains from the reduction in access charges. Wireless customers are not assessed a SLC charge, therefore SLC increases should not impact wireless subscribers. Wireless subscribers, however, are assessed USF charges and may bear some portion of overall USF increases. If so, this effect may reduce somewhat the welfare gains received by wireless customers. However, as explained earlier, our analysis assumes that the full amount of overall USF increases are borne by wireline customers. This assumption in the wireline analysis, therefore, has captured the full negative welfare impact of increased USF charges and permits these potential USF charge effects to be excluded from the wireless analysis.

Second, unlike the wireline effects described above, the analysis of wireless calling includes the impact of reducing reciprocal compensation charges along with access charges. Although the impact of the reciprocal compensation reduction is significantly smaller than the impact of the access reduction (since reciprocal compensation rates are so much lower to begin with), this impact is realized across a larger quantity of wireless minutes than the access reduction impact.

Third, unlike the wireline analysis above, there are a certain portion of wireless minutes for which there will be no reduction in either access charges or reciprocal compensation charges. This is because, for wireless customers on average, a certain number of minutes (such as on-network, wireless-to-wireless minutes) incur neither access charges nor reciprocal compensation charges.

This third effect could be incorporated into the analysis two different ways. One could attempt to measure the impact of the access charge reductions and reciprocal compensation reductions on the subset of minutes to which each applied. Or one could incorporate the combined reductions into an overall (but much smaller) impact that would be applied across all wireless minutes. For example, assume the monthly reduction in access charges and reciprocal compensation for an average wireless customer totaled $1.00. If the average number of customer minutes was 100 per month (25 access-bearing minutes and 75 non-access-bearing minutes), the $1.00 reduction could be modeled as a four-cent-per-minute reduction on each access-bearing minute. Alternately, the $1.00 reduction could be modeled as a one-cent-per-minute reduction on all 100 minutes.

The second approach is the most appropriate for two reasons. The first is that wireless demand elasticity measures do not differentiate between types of wireless minutes. The second is because (unlike wireline calling) the retail pricing of wireless calls generally blends charges imposed for minutes that bear access charges and minutes that do not. Thus, callers tend to be insensitive to distinctions between minute types.

As in the case of wireline calling, Figure 6 demonstrates the gain in consumer surplus that wireless customers receive as a result of the access charge reductions and reciprocal compensation charge reductions built into the ICF plan.

Known variables are:

- Current average per minute price of wireless calling, $P_{current}$, is approximately $0.0341.[31]
- Expected wireless minutes per subscriber per month of 791.[32]
- Post-ICF plan per minute wireless calling price, $P_{proposed}$, of $0.0319 is realized after the fourth year of the plan's implementation. This reduction assumes complete flow through of both access charge reductions (approximately $0.0111 per access minute) and reciprocal compensation charge reduction (approximately $0.0007 per reciprocal compensation minute). However, as discussed above, the total impact of these reductions in charges for access minutes and for reciprocal compensation minutes is divided across all wireless minutes, resulting in a much smaller per-minute impact when spread across this larger denominator.[33]

---

[31] The Cellular Telecommunications & Internet Association's December 2004 Survey provides average revenue per unit ("ARPU") numbers which are adjusted for non-telecom revenue and non-minute related revenue. Using FCC data we estimate that telecom revenue represents 87% of ARPU. Using regression analysis we estimate that, on average, $20 of ARPU is non-minute related. The remaining dollars are divided by average minutes to obtain a per incremental minute price. This figure does not include USF collections. (It is worth noting that although the per-minute price is heavily dependent on the assumption regarding non-minute-related ARPU, the calculated benefits are not. Changing the assumption of non-minute-related ARPU from $20 per subscriber to zero changes the per-minute price by approximately 1.5 cents. However, the corresponding change in consumer welfare changes by less than two percent.)

[32] Figure projected as of year-end 2005 using estimated historical minute growth rate applied to data from Merrill Lynch Security Research and Economic Group Study, 2004. This figure represents an extremely conservative projection for the number of minutes used by wireless customers during the anticipated effective dates of the ICF plan.

[33] The actual process for calculating the reduction is as follows. For an average wireless purchaser, determine total monthly minutes, percent of minutes originating versus terminating, the percentage of originating minutes that are terminating to another carrier and incurring access charges, and the percentage of originating minutes that are terminating to another carrier and incurring reciprocal compensation charges. For an average consumer utilizing 791 minutes per month, we estimate 60% of total minutes are originating (475/791). Of those 475 minutes, we estimate that on average 45% (214/475) incur reciprocal compensation charges and an additional 30% (142/475) incur access charges. The per-minute access charge reductions are applied to the 142 minutes, and the per-minute reciprocal compensation charge reductions are applied to the

- The price elasticity of demand for per minute wireless calling, $\beta$, is assumed to be -1.29. This measure applies to all wireless minutes.[34]

Figure 6 displays the various components of the total welfare gain to wireless customers. As with the wireline analysis, one portion of the total gain is the net reduction in the per-minute price of wireless calling multiplied by the previous purchase volume of minutes (Area A); while the second portion is the increased value gained by wireless customers from their increased demand stimulated by the lower price (Area B).[35] These gains are calculated on a monthly basis per-subscriber using average minutes, and then multiplied by the total number of wireless subscribers. However, unlike the wireline analysis above, the wireless estimate must also incorporate the dramatic growth in wireless subscribers that we have witnessed – and expect will continue – over the life of the ICF plan.

Referring to Figure 6 for a graphical point of reference, it is clear that as new wireless customers enter the market over the next four years, the amount of consumer surplus that each will enjoy is measured as the area to the left of the demand curve and above $P_{proposed}$. Absent the reductions caused by the ICF plan, the amount of consumer surplus that these same new customers would enjoy would be the area to the left of the demand curve and above $P_{current}$. Clearly, new subscribers realize a greater amount of consumer surplus than they would realize absent the plan. Therefore, it is necessary to incorporate the growth in wireless subscribers in order to accurately measure the cumulative benefit from the ICF plan's expansion of each subscriber's consumer surplus.

Figure 7 demonstrates that after full phase-in of the ICF plan, *wireless customers will experience an annual net consumer welfare gain of approximately $4.7 billion that will continue for the remaining years of the plan.* This translates to the average wireless subscriber receiving a monthly benefit of $1.80 relative to no reform of intercarrier compensation. On an annual basis, this amounts to $21.66 per subscriber once rebalancing is complete. Of these benefits to wireless customers, 42% are due to reform of interstate access charges and reciprocal compensation while 58% are due to reform of

---

214 minutes. Then the combined dollar value of the two reductions is divided across all 791 minutes, for a per-minute reduction of $0.0022. As in the wireline analysis, the assumption is that this impact is phased in evenly over four years.

[34] Taken from A. Ingraham and J. G. Sidak, "Do States Tax Wireless Service Inefficiently? Evidence on the Price Elasticity of Demand," *Virginia Law Review*, Fall 2004.

[35] Although wireless subscribers may see some small increases in their USF charges as a result of the ICF plan, we have already accounted for these USF increases in the wireline analysis. To the extent this occurs, our analysis may overstate wireless benefits and understate wireline benefits.

intrastate access charges.[36] Over the eight year life of the ICF plan, these wireless benefits will amount to over $30 billion, or $138 per subscriber.

## 5 Combined results – including USF collections reform

As discussed above, the impact of the intercarrier compensation payments reform provisions of the ICF plan on wireline customers produces, upon completion of the rebalancing, a net increase in consumer welfare of $2.4 billion annually. The analogous impact on wireless customers produces, upon completion of the rebalancing, a net increase of consumer welfare of approximately $4.7 billion annually. Thus the wireline plus wireless total benefit exceeds $7.1 billion per year after phase-in.[37]

But in addition to the ICF plan's reforms of intercarrier compensation payments, the plan also reforms the method for collecting universal service subsidy funds. Currently, these funds are collected by an ad valorem assessment on interstate communications services. Thus, current per-minute interstate retail toll prices are inflated by the amount of this "tax," currently in the neighborhood of 11%. The benefit calculation we perform does not assume that switched wireline or wireless service shed any of their total USF obligation to other customers (e.g., cable modem customers, special access customers, etc.) While such transfers may occur under the ICF plan, modeling this shift would require calculating the reduction in consumer surplus from these other services to net against larger figures for switched wireline and wireless benefits. Thus, the only USF collections-related benefits we claim for switched wireline and wireless customers are the benefits resulting from a revenue-neutral shift of collections from high-elasticity per-minute rates to low-elasticity per-connection rates.[38]

---

[36] Because the Federal Communications Commission has asserted jurisdiction over reciprocal compensation pricing, we assume that this service is interstate. See *Order on Remand and Report and Order*, "Intercarrier Compensation for ISP-Bound Traffic," CC Docket No. 99-68, released April 27, 2001. Available at: http://hraunfoss.fcc.gov/edocs_public/attachmatch/FCC-01-131A1.pdf .

[37] As explained above, due to the treatment of USF assignments, the individual welfare gain to wireline customers may be *under*stated and the individual gain to wireless customers may be *over*stated, however the *combined* consumer welfare gain to wireline and wireless customers of $7.1 billion after phase-in of the compensation reform provisions of the ICF plan correctly identifies the total impact.

[38] If a wireless carrier has already chosen to collect its USF assessments through flat per-customer charges, then the welfare benefits from this shift to per-connection charges may be somewhat less than calculated here.

Figure 8 calculates the welfare gains from converting this USF collection method to one based on a flat monthly charge per line or per connection.[39] It demonstrates that this conversion will return wireline customers an additional $77 million in consumer surplus per year. Over the eight year horizon of the ICF, these benefits amount to $616 million. Figure 9 calculates the analogous welfare gains to wireless customers. It demonstrates that this conversion will return wireline customers an additional $45 million in consumer surplus per year.[40] Over the eight year horizon of the ICF, these benefits amount to $361 million.

Thus, the combined compensation and USF collections reform provisions of the ICF plan produce an annual net increase in consumer welfare of over $7.2 billion, which will be realized for every year of the plan after phase-in. Over the entire life of the plan (four years of phase-in, four years of full effect), the cumulative benefits amount to about $44.5 billion.

But benefits to the entire telecommunications sector and economy may well exceed the consumer welfare figures reflected above. Any economic activity in a specific sector that introduces additional dollars into the system has a multiplier effect as those dollars flow through the greater economy. These impacts on output and employment can be measured by using the Department of Commerce RIMS II multipliers.[41] For the telecommunications sector, the RIMS II multiplier is 2.56. Simply stated, this means that a $1 expansion of economic activity in the telecommunications sector ultimately translates to a $2.56 expansion in the overall economy. Because ICF compensation reforms have the effect of increasing net overall expenditures on telecommunications, they introduce just such an injection into the greater system. Using the RIMS II multiplier, the multiplied economic impacts are approximately $61.1 billion over the life of the plan. This figure is separate and apart from the $44.5 billion of increased consumer surplus – translating to a combined economic benefit of over $105 billion. Applying the RIMS II multiplier for employment of 15.75 new jobs per additional million dollars of demand indicates that overall national employment also could rise by as much as 109,000 jobs after full implementation of the plan. Fully 60% of all of these benefits

---

[39] Because current USF collections rules only assess interstate revenues, the calculated welfare gains are based only on reductions in the effective retail price of interstate toll minutes.

[40] Because current USF collections rules only assess interstate revenues, wireless benefit calculations assume that average wireless retail prices will fall by only 30% of the amount that interstate minute prices would drop from this collections reform.

[41] Bureau of Economic Analysis, U.S. Department of Commerce RIMS II Multipliers (1997/2002), Table 1.4.

derive from reform of intrastate mechanisms and 40% from reform of interstate mechanisms.

## 6 Wider influence on technological progress

The previous two sections have quantified some of the direct effects of intercarrier compensation reform on stimulating demand and improving immediate economic performance. But the overall effects of such reforms are not limited strictly to those arising from stimulation of demand quantities. Network technologies are not developed and disseminated in a vacuum. They are as much the product of customer demand as they are the outgrowth of serendipitous research. In the free market economy that characterizes most of U.S. telecommunications, research is primarily undertaken and funded by private companies. While these companies may be equipment manufacturers like Lucent or Cisco, or service providers like Sprint, SBC or AT&T; they all ultimately derive their funds and inspiration from customers. Thus, customer demand drives the technological growth of U.S. telecommunications.

But if customer demand is repressed, or artificially twisted to favor certain types of technologies or carriers, technological progress will be stultified. Some services will see too little research and attention, while others will receive too much. Some carriers will spend excessively on investment, when equal or lesser investment by other carriers could yield greater outputs, lower costs or greater customer satisfaction. As shown earlier, rate structures such as those for intercarrier compensation are a crucial determinate of demand levels and patterns. If these rate structures track faithfully the underlying costs of service, then customer demand for the service will be at its economically efficient level, and economically optimal technological development and investment will ensue. But absent intercarrier compensation reform, this will not be the case. In the following paragraphs we will discuss just a few of the ways in which intercarrier compensation reform is likely to yield economic dividends in addition to those quantified in the previous sections.

### 6.1 Evolving cost structure in telecommunications

Telecommunications networks of today differ from those of yesterday, even for traditional voice services. Twenty to thirty years ago, practically all telephone lines were served by copper loops. These loops left the telephone company central office and snaked in an unbroken chain all the way to the customer's premises. The cost of such loops was completely nontraffic-sensitive. At the central office, these loops were plugged into an electro-mechanical step-by-step switch, or possibly into one of the newer crossbar or analog stored program control switches. These switches had relatively few

resources dedicated to any particular line. The vast majority of their resources were common resources that could be commandeered by any particular line needing to place or receive a telephone call. Because of this preponderance of shared resources within the switch, the cost of telephone switching was largely traffic-sensitive. That is, the cost of provisioning the switch grew in close proportion to the volume of minutes the switch was expected to provide – independent of the number of lines served by the switch. Thus, if a particular telephone line rarely received or placed calls, its existence imposed much less cost on the switch than a line that was used more intensively.

Similarly traffic sensitive was inter-office transport. Transmission links of twenty to thirty years ago were an amalgam of 4-wire copper T1 circuits, copper coaxial circuits or microwave radio circuits. All of these technologies were of extremely limited capacity that required substantial replication of infrastructure (*e.g.*, additional copper pairs, additional coaxial cables, additional microwave towers and antennas) when demand grew beyond already-installed capacity. Thus, neither historical switching nor historical transmission technologies exhibited substantial economies of scale. As traffic demands grew, the costs of these technologies grew in similar fashion. As a result, historical rate structures for toll traffic that were almost entirely traffic-sensitive (e.g., double the minutes, double the charge) may have been reasonable trackers of the underlying economic costs.

But modern technologies for digital switching and fiber-optic transmission have overturned old cost equations. In particular, not only are modern digital switches relatively less expensive and much more functional than older switch technologies, their costs are not as sensitive to the number of minutes demanded by each line. Huge portions of the digital switch's resources (and costs) are dedicated separately to individual lines. And with the massive increases in computing power offered by modern microchips, the call processing capacity of even the shared elements of modern digital switches is adequate to serve all reasonably offered demand. Thus, extra minutes of demand from any individual line have a small impact on the overall cost of the switch.

Fiber-optic technologies have similarly transformed the economics of transport. There are two significant parts to the cost of fiber-optic transport. By far the most substantial of these is the cost of fiber cable itself, its supporting structure (e.g., poles, trenches or underground conduit) and its installation. A much more secondary cost (particularly on longer routes) is the cost of the electronic laser transmission equipment attached to each end of the fiber. As evidence that this statement is true, consider what occurs when a capacity constraint is reached. Given the large cost of laying additional fiber versus the small (and steadily declining) cost of installing upgraded electronics, the method of choice for augmenting capacity is nearly always to install higher capacity

electronics on the in-place fiber. Thus, once a fiber cable has been laid on a route, the costs of increasing its transmission capacity are relatively small, so extra minutes of demand result in very little incremental costs for transport.

Although rate structures for toll telephone calling have been evolving toward the nontraffic-sensitive cost structures that underlie these services, this evolution remains incomplete. Access charges for local switching remain primarily per-minute traffic sensitive, as do charges for common interoffice transport. The result is a wholesale and retail rate structure for telephone communications that imposes significant extra charges for each minute of use, even though network costs incurred to provide those minutes of use are small.

The mismatch that currently exists between traffic-sensitive rates and generally nontraffic-sensitive costs has severe implications – both for customer demand and for technical progress, innovation and investment. The price signals presented by current rates tell customers (falsely) that additional minutes of calling are costly, and should be foregone unless they return an extremely high value. While in actuality, the true incremental cost of supplying these extra minutes is modest, and is covered even by minutes that return far less benefit to customers than the minutes currently being purchased. As was the focus of earlier sections, this mismatch between rates and economic costs results in repression of customer demand relative to levels that would be efficient.

But the damage caused by cost-rate structure mismatches goes far beyond repression of currently efficient demand. These mismatches reduce incentives to invest in telecommunications networks and to seek new technological innovations. This is due to the double facts that repressed demand checks the required capacity growth of the network (and slower-growing networks require less investment than faster-growing ones) and that manufacturers' incentives to technically innovate are reduced when the flow of investment equipment purchases is slack.

As worrisome as these drags on the technical progressiveness of the telecommunications industry are, the stultification induced by inefficient rate structures may be even more insidious. Whole classes of innovations in telecommunications technology and use may be sacrificed due to inefficient rate structures. For example, a huge reason why the U.S. became the epicenter for development of the Internet and the World Wide Web was because U.S. consumers were the first heavy adopters and users of dial-up Internet access. This was because rate structures for U.S. local telephone service (although not for toll telephone service) largely were flat-rated as were the charges for dial-up Internet access. Thus, flat-rated rate structures provided the incentive for U.S.

customers to dial up their Internet Service Providers *and stay online* – surfing to previously unexplored web sites, clicking on new links, trying new online applications – explorations that they would not have so eagerly undertaken if a rate meter were running and charging them more for each minute of use or for each new interactive session. Internet Service Providers and web site developers responded in turn – putting more and more content online, developing new applications and sites. As a result, during the dominance of dial-up access, the Internet world focused on the U.S., and the benefits to the U.S. economy from these developments have been incalculable.

In contrast, most foreign countries maintained a highly traffic-sensitive rate structure for local telephone service, hence Internet access by their citizens was highly price-rationed. If a customer sought to access a website, she would dial up and do so – but then immediately log off in order not to accumulate additional local service charges. Internet exploration was costly, and hence repressed. Thus, for a half a dozen years in the late '90s, while the U.S. was seizing the Internet lead, the rest of the world was sitting on the sidelines and letting innovation center within the U.S. information and communications technology industry. While more recent dissemination of broadband Internet connections (at flat rates) in foreign countries has brought these economies back into the advanced information technology fold, there is little question but that the U.S. economy reaped considerable advantage from its headstart – an advantage that continues to pay great dividends – all because the rate structures utilized in the U.S. better matched costs than the rate structures chosen abroad.

## 6.2 Evolving usage of telecommunications

In addition to evolving supply technologies, telecommunications demand is evolving away from predominance of demand for circuit-switched voice services and towards a predominance of demand for packet-switched data services. While telecommunications demand of twenty to thirty years ago was almost completely that for voice, today demands have flipped. Some eighty to ninety percent of all traffic on today's telecommunications networks is data – and most of that is packet data rather than circuit-data. The implications for sustainable rate structures are profound.

Advanced encoding and compression techniques have made it feasible to send voice traffic as a set of encoded data packets. Even if all current circuit-switched voice traffic were converted into packet data traffic, the data packets carrying voice would constitute but a tiny fraction of all current communications demand. It is for this reason that the engineering of most modern telecommunications networks focuses on the efficiency with which they can carry data traffic. Because data traffic rarely requires virtual real time handling, these networks can and do use Internet Protocol ("IP")

routing techniques that permit packets to be briefly stored at routing nodes waiting for temporary congestion to lift or for packets in a particular stream to be routed via different paths to reach their common destination. A characteristic of these "connectionless" packet networks has been a rate structure that charges end user customers a flat rate fee based on the capacity of their broadband access line, with revenues from this flat rate used to recover both the costs of the broadband access line as well as to compensate long-haul IP backbone networks for the packet transit services they provide to send and receive data between the customer's ISP and the distant websites (or other customer premises) that the customer seeks to access.[42] In particular, IP backbone networks do not pay compensation to local ISPs for traffic originated by or terminated to their subscribers. Because of the connectionless nature of IP networks, different packets may have traversed different paths operated by different carriers, and determining billing back to an end user customer may be next to impossible. Thus, the rate structure that has been established for IP networks is one in which the end user is responsible for paying for all traffic that originates or terminates on its line – through the flat capacity-based rate that it pays to its ISP.[43]

## 6.3 Growth of VoIP

As techniques for transmitting voice over IP broadband connections have improved, more and more customers are using VoIP to provide themselves with voice telecommunications services. By so doing, they pay "rates" for voice services that follow IP service paradigms. The cost of their local access is subsumed within the flat rate that they pay to their ISP for their broadband connection. And the service rates they pay to

---

[42] Note that ISPs are under no obligation to charge flat capacity-based rates to their customers. ISPs could charge traffic-sensitive per-packet rates if they so desired. In general, though, due to the largely nontraffic-sensitive nature of local broadband networks and the significant costs of billing customers for individual packets – let alone the marketing difficulties in convincing customers to accept per-packet billing when they may be little aware of the number of packets traversing their line or capable of properly anticipating the number of packets a particular activity may generate – ISPs almost unanimously have eschewed packet-based rates.

[43] We understand that certain rural carriers have proposed that LECs operating digital subscriber line ("DSL") internet access networks be permitted to levy usage-sensitive "session" charges against ISPs and providers of retail internet applications (e.g., airline reservation services, weather services, etc.) for the interactions made between the LEC's DSL end users and different websites or internet applications. While vaguely presented, this proposal seems most unwise. At best it would result in either ISPs and websites declining to serve customers whose DSL provider opted to charge them such a session fee, or, if feasible, these ISPs and websites passing these LEC-imposed usage fees directly back to the LEC's DSL customer. At worst this session fee proposal would generally stunt the use of innovative information technology applications in the U.S. and lead to a decline of U.S. competitiveness in the global economy – similar to what occurred abroad in the '90s when foreign customers were forced to pay usage-sensitive rates to surf the Internet.

their VoIP supplier are either nil (*e.g.*, computer-to-computer SKYPE) or are largely nontraffic-sensitive (*e.g.*, Vonage, Packet8 or AT&T CallVantage).

Thus the growing competitive pressure from VoIP alternatives must limit the viability of per-minute traffic-sensitive rates charged by traditional wireline carriers. If customers have a choice of receiving their voice services for next to no incremental charges, fewer and fewer will opt to pay extra per-minute charges in order to receive their voice service from a traditional wireline carrier.

### 6.4 Larger economic benefits

The above paragraphs have outlined just a few of the many reasons why intercarrier compensation reform may be expected to return benefits far in excess of the demand stimulation benefits quantified in this paper. And as also indicated earlier, each of these further benefits may have their own multiplied extra benefit on the overall national economy.

## 7 Plan to improve intercarrier compensation

Fortunately, a plan does exist that can address the infirmities of today's broken system for intercarrier compensation. The plan presented by the ICF cures current problems by harmonizing today's disparate compensation rate structures into a single structure that applies to all communications: both local and long distance, interstate and intrastate, voice and data, wireline and wireless, *etc.* In addition to a single rate *structure*, the ICF plan also provides for a uniform effective compensation *methodology* by requiring all carriers to exchange traffic on a bill-and-keep basis. Such a basis encourages all carriers to actively expand and market their retail services. Because current compensation payments may comprise a disproportionate fraction of small rural local carrier revenues, the ICF plan also permits recovery of a substantial portion of such carriers' service costs through an efficiently-funded carrier, call and technology-neutral universal service fund. In this way, customer choice is expanded and telecommunications industry productivity is enhanced as universal service is being secured.

Although the ICF plan is not the only plan that has been offered to reform intercarrier compensation and USF mechanisms, it is the only one capable of offering the degree of customer benefits enumerated here. Other plans suffer from a number of deficiencies. These alternative plans are thus unlikely to elicit maximum extra efficiency in telecommunications consumption, investment and technological progressiveness.

## 8 Summary

A robust competitive network of networks cannot be maintained unless intercarrier transfers of calls and communications bits are handled efficiently. Not only does this mean that physical interconnections must be efficient, but also that financial responsibility for these transfers be allocated efficiently. Unfortunately, this is not the case. Rather than a uniform rate structure linked closely to economic cost, intercarrier compensation rates follow a cacophony of themes. These rates vary based on the jurisdiction of the call, the size and type of carrier both delivering and terminating the call, the technology used by these various carriers, and so forth. So long as such a crazy quilt compensation rate structure exists, retail telecommunications rates will fail to match costs and customer demand patterns will be skewed. Carriers will attempt to seek advantage through regulatory classification and gratuitous alterations in their technologies and call handling and delivering processes.

If U.S. telecommunications is to be a productive vibrant force for technological advance and customer value, current intercarrier compensation processes must be reformed, and the ICF plan offers the best method of doing so. Today's collection of disparate compensation rates must be replaced by a system that is uniform in both structure and rates across all telecommunications uses. It should reflect the economic costs incurred and provide carriers with incentives to interconnect efficiently. Furthermore, only such an economically sound uniform system can permit universal service to be protected. The plan offered by the ICF will address all of these infirmities. By converting today's unsound arrangements to a comprehensive structure based on bill-and-keep, with necessary subsidy funds collected through flat per-connection charges, proper incentives will be created, universal service will be protected, consumer welfare gains in the amount of $105 billion along with an employment increase of 109,000 jobs may be secured and telecommunications can flourish for the benefit of all Americans.

**Figure 1**

# Call Flow Schematic

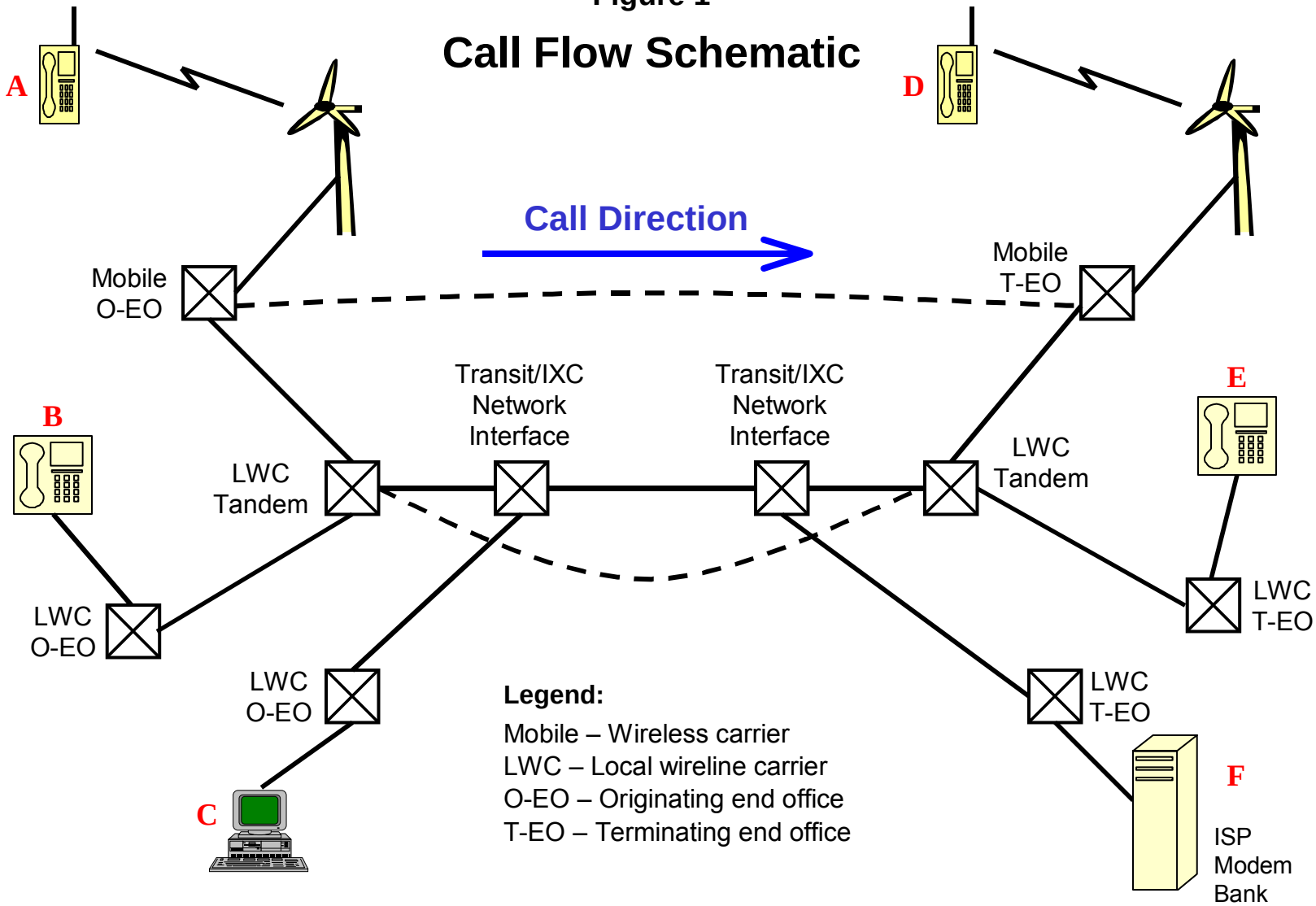

**Figure 2**

# Simplified Schematic

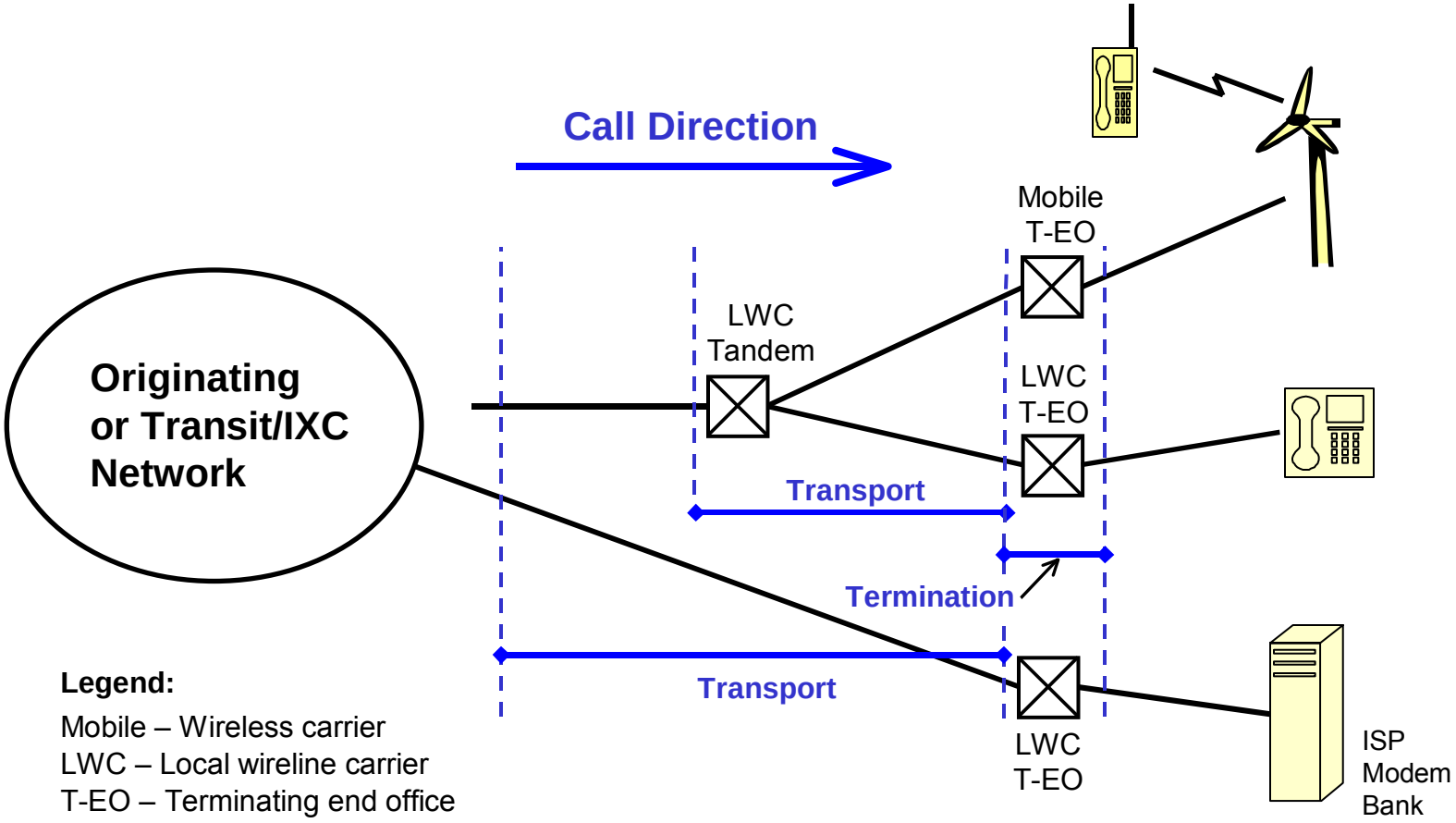


**Legend:**

Mobile – Wireless carrier
LWC – Local wireline carrier
T-EO – Terminating end office

## Figure 3

### Disparity in Intercarrier Compensation Rates

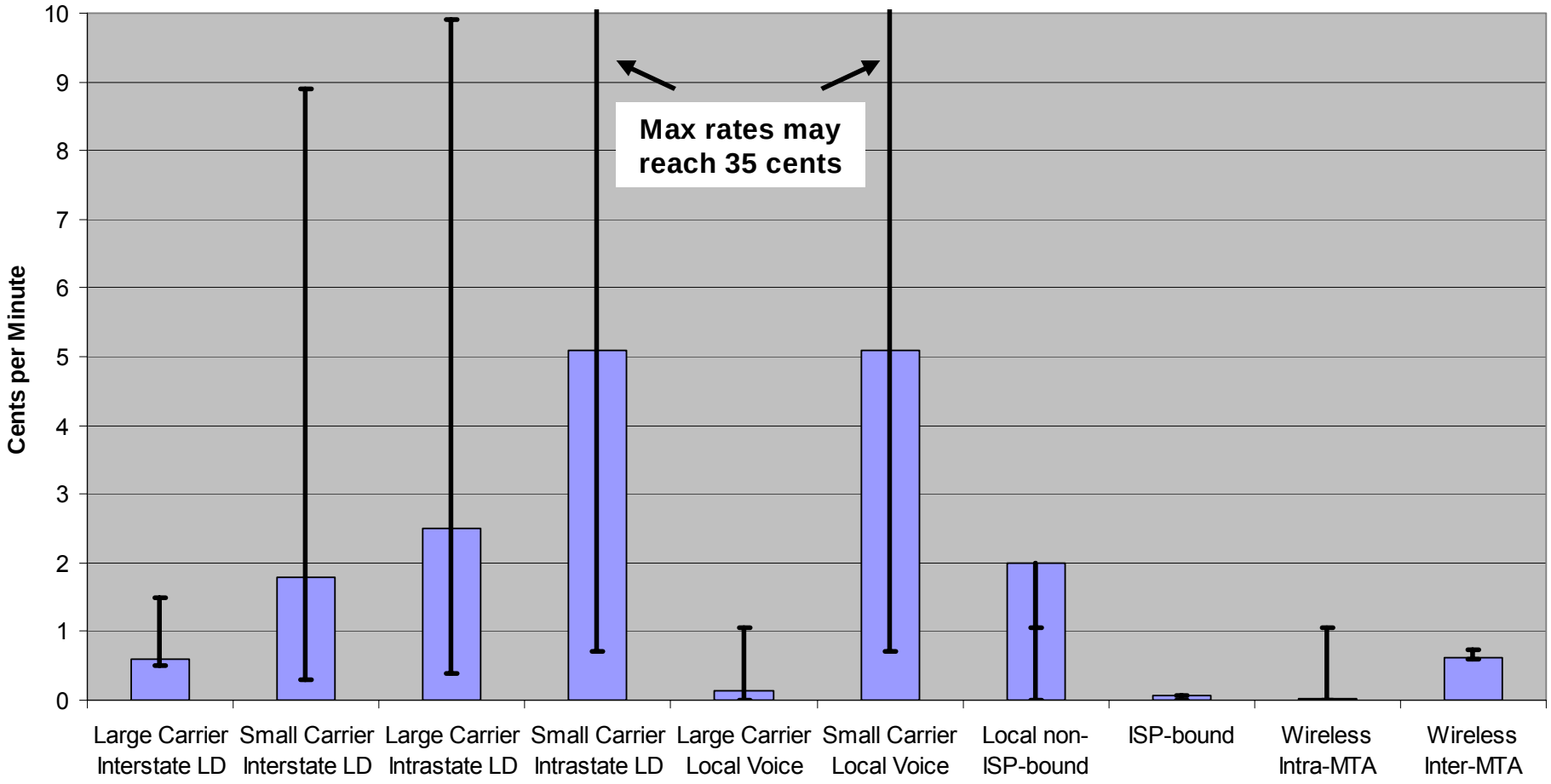

## Figure 4

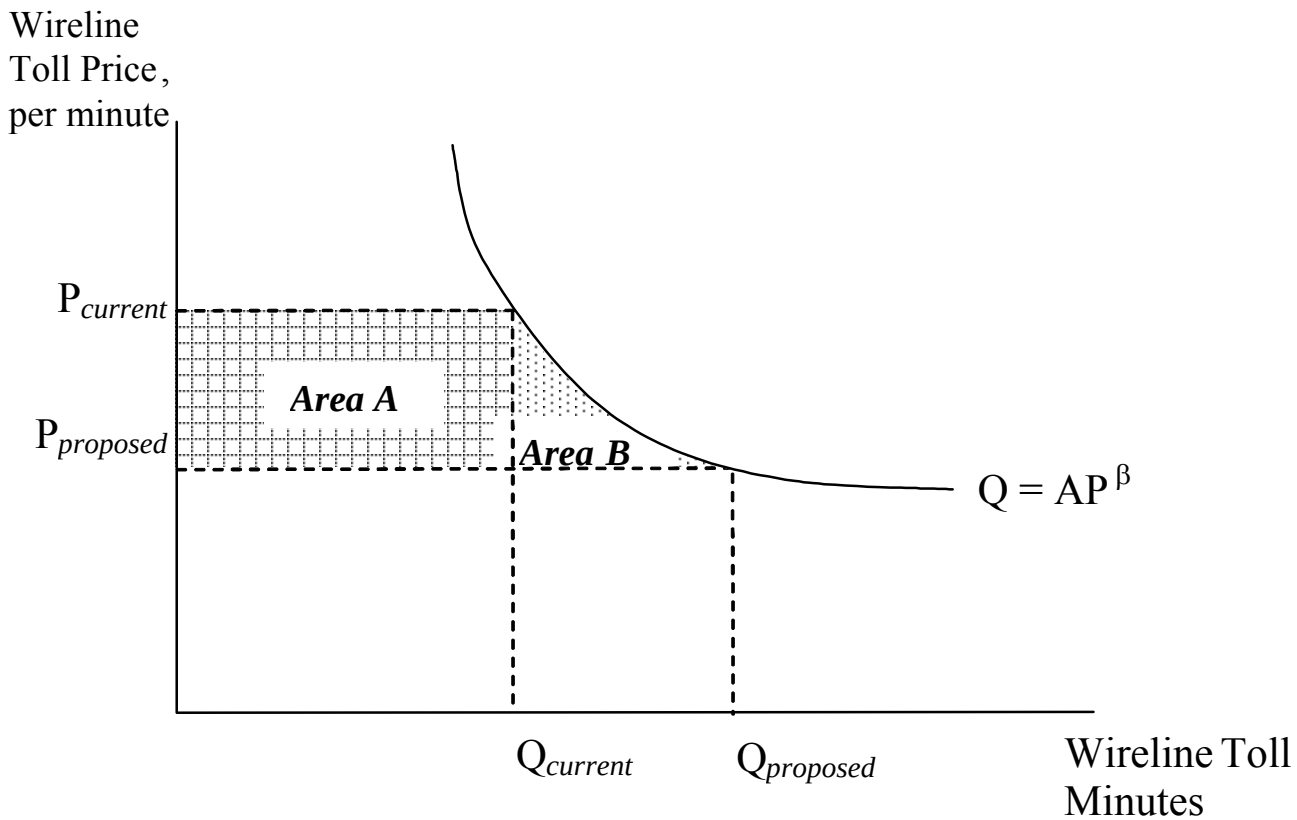


**Net Consumer Benefit = Area A + Area B– increase in End User Charges**

$\beta$ represents the wireline toll price elasticity of demand – estimated at -0.72

# Figure 5

## ICF Plan for Compensation Reform: *WIRELINE CONSUMER WELFARE ANALYSIS*

| | Base Year | Step 1 | Step 2 | Step 3 | Steps 4&5 | |
|---|---|---|---|---|---|---|
| Wireline toll minutes | 582,315,493,000 | 621,510,095,962 | 667,658,493,476 | 722,936,745,681 | 790,573,706,666 | |
| % Change | | 6.7% | 7.4% | 8.3% | 9.4% | |
| *Composite Switched Access rate per convers min* | $0.0198 | $0.0155 | $0.0112 | $0.0068 | $0.0025 | |
| Estimated Toll Price per minute (w/o USF) | $0.0500 | $0.0457 | $0.0414 | $0.0370 | $0.0327 | |
| % Change | | -8.7% | -9.5% | -10.5% | -11.7% | |
| Interstate toll price elasticity (β) | -0.72 | -0.72 | -0.72 | -0.72 | -0.72 | |
| Constant (A) in demand equation Q = A(P^β) | 67,362,275,335 | 67,362,275,335 | 67,362,275,335 | 67,362,275,335 | 67,362,275,335 | |
| Wireline Toll Revenues | $29,115,774,650 | $28,387,473,633 | $27,607,678,705 | $26,766,733,009 | $25,851,760,208 | |
| Area A ($ transfer from producers to consumers) | | $2,518,514,507 | $2,688,031,165 | $2,887,622,984 | $3,126,701,425 | |
| Area B (amount added to consumer surplus) | | $82,560,553 | $96,950,720 | $115,754,503 | $141,058,578 | |
| Incremental End User Increases (SLC + USF charges) | | $2,532,289,119 | $2,232,115,385 | $2,815,728,499 | $1,680,079,237 | |
| | | | | | | ***Cumulative Gain Over Eight Year Plan*** |
| Incremental Annual Net Benefit (Area A + Area B - End User incr) | | $68,785,941 | $552,866,500 | $187,648,988 | $1,587,680,766 | |
| Run-rate relative to base | | $68,785,941 | $621,652,441 | $809,301,429 | **$2,396,982,195** | **$13,484,650,784** |
| Incremental Monthly Net Benefit | | $5,732,162 | $46,072,208 | $15,637,416 | $132,306,730 | or **$127** |
| Run-rate relative to base | | $5,732,162 | $51,804,370 | $67,441,786 | $199,748,516 | per household |
| Monthly Net Gain per subscribing household (run-rate) | | $0.05 | $0.49 | $0.63 | **$1.88** | |
| Households | 106,400,000 | | | | | |
| Intrastate fraction of access reductions | 63% | | | | | |
| Interstate fraction of access reductions | 37% | | | | | |
| Intrastate benefits (run-rate) | | $43,335,143 | $391,641,038 | $509,859,900 | **$1,510,098,783** | **$8,495,329,994** |
| per household per month | | $0.03 | $0.31 | $0.40 | **$1.18** | $80 per household |
| Interstate benefits (run-rate) | | $25,450,798 | $230,011,403 | $299,441,529 | **$886,883,412** | **$4,989,320,790** |
| per household per month | | $0.02 | $0.18 | $0.23 | **$0.69** | $47 per household |

**Figure 6**

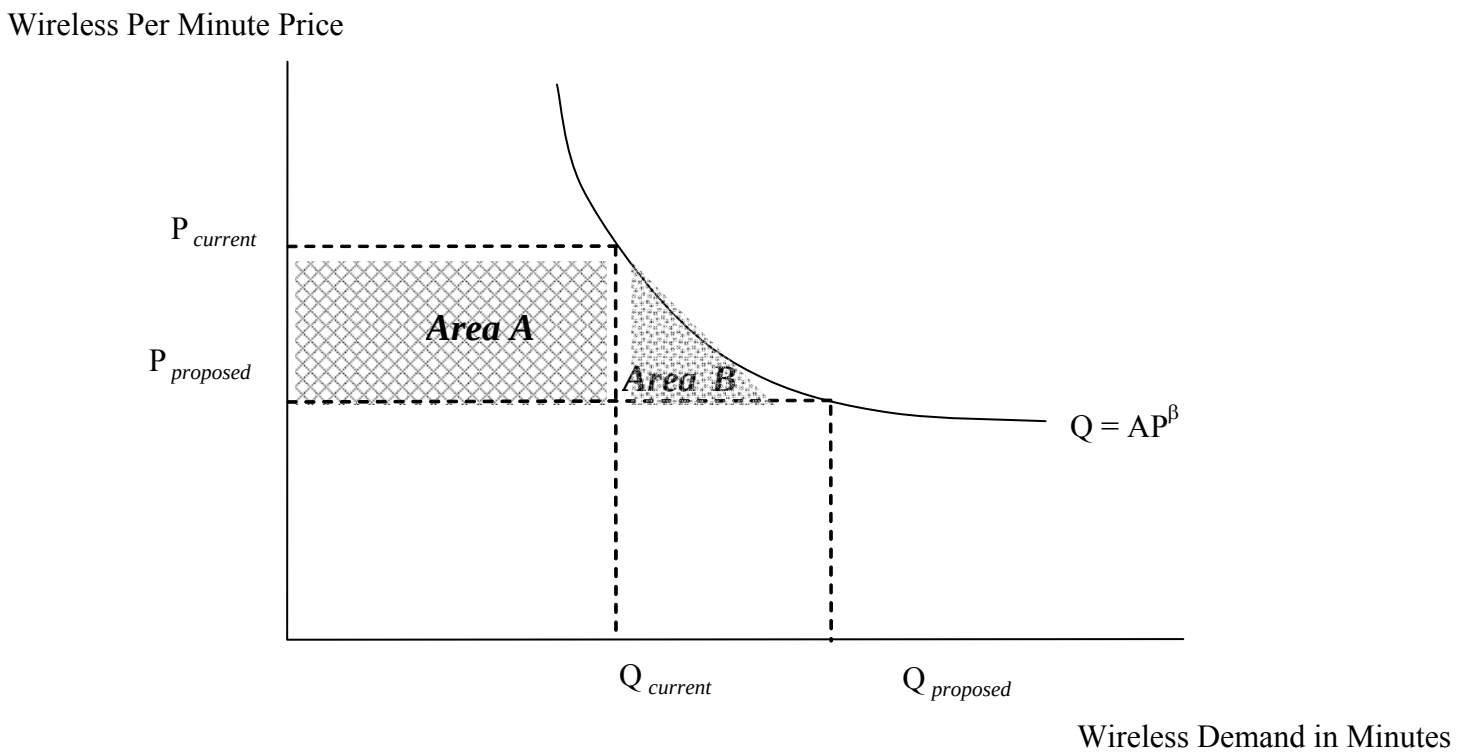


**Net Consumer Benefit = Area A plus Area B**

$\beta$ = price elasticity of demand for wireless calling of -1.29

# Figure 7

## ICF Plan for Compensation Reform: *WIRELESS* *CONSUMER WELFARE ANALYSIS*

| | Base Year | Step 1 | Step 2 | Step 3 | Steps 4&5 | |
|---|---|---|---|---|---|---|
| Wireless minutes per subscriber per month | 791 | 808 | 825 | 843 | 861 | |
| % Change | | 2.1% | 2.1% | 2.2% | 2.2% | |
| Estimated Price per wireless minute (w/o USF) * | $0.0341 | $0.0336 | $0.0330 | $0.0325 | $0.0319 | |
| % Change | | -1.6% | -1.6% | -1.7% | -1.7% | |
| Wireless price elasticity (β) | -1.29 | -1.29 | -1.29 | -1.29 | -1.29 | |
| Constant (A) in demand equation Q = A(P^β) | 10.1243 | 10.1243 | 10.1243 | 10.1243 | 10.1243 | |
| Minute-driven wireless revenues | $26.97 | $27.10 | $27.23 | $27.36 | $27.49 | |
| Subscribers @ 10% growth: | 170,431,172 | 187,474,289 | 206,221,718 | 226,843,889 | 249,528,278 | |
| Area A ($ transfer from producers to consumers) | | $0.4324 | $0.4415 | $0.4510 | $0.4608 | |
| Area B (amount added to consumer surplus) | | $0.0045 | $0.0047 | $0.0049 | $0.0051 | |
| Incremental monthly benefit per subscriber | | $0.4369 | $0.4462 | $0.4558 | $0.4659 | |
| | | | | | | ***Cumulative Gain Over Eight Year Plan*** |
| Incremental Annual Net Benefit | | $982,951,105 | $1,104,216,159 | $1,240,873,554 | $1,394,945,701 | |
| Run-rate relative to base | | $982,951,105 | $2,087,167,264 | $3,328,040,819 | **$4,722,986,520** | **$30,013,091,788** |
| Incremental Monthly Net Benefit | | $81,912,592 | $92,018,013 | $103,406,130 | $116,245,475 | or **$138** |
| Run-rate relative to base | | $81,912,592 | $173,930,605 | $277,336,735 | $393,582,210 | per subscriber |
| Monthly Net Gain per subscriber (run-rate) | | $0.44 | $0.88 | $1.34 | **$1.80** | |
| Intrastate fraction of access/comp reductions | 58% | | | | | |
| Interstate fraction of access/comp reductions | 42% | | | | | |
| Intrastate benefits (run-rate) | | $566,000,495 | $1,201,827,536 | $1,916,344,303 | **$2,719,578,516** | **$17,282,064,916** |
| per subscriber per month | | $0.25 | $0.51 | $0.77 | **$1.04** | $79 per subscriber |
| Interstate benefits (run-rate) | | $416,950,610 | $885,339,728 | $1,411,696,515 | **$2,003,408,004** | **$12,731,026,872** |
| per subscriber per month | | $0.19 | $0.37 | $0.57 | **$0.77** | $59 per subscriber |

* Figure excludes wireless revenues that are not related to minutes of use

# Figure 8

**ICF Plan for <u>USF Collections</u> Reform: *<u>WIRELINE</u> CONSUMER WELFARE ANALYSIS***

| | Base Year | Step 1 | Step 2 | Step 3 | Steps 4&5 | |
|---|---|---|---|---|---|---|
| Wireline toll minutes | 373,083,539,560 | 402,196,820,585 | 402,196,820,585 | 402,196,820,585 | 402,196,820,585 | |
| % Change | | 7.8% | 0.0% | 0.0% | 0.0% | |
| Estimated Toll Price per minute w/ USF | $0.0550 | $0.0495 | $0.0495 | $0.0495 | $0.0495 | |
| % Change | | -9.9% | 0.0% | 0.0% | 0.0% | |
| Interstate toll price elasticity (β) | -0.72 | -0.72 | -0.72 | -0.72 | -0.72 | |
| Constant (A) in demand equation Q = A(P^β) | 46,223,968,105 | 46,223,968,105 | 46,223,968,105 | 46,223,968,105 | 46,223,968,105 | |
| Wireline Toll Revenues | $20,519,594,676 | $19,928,671,290 | $19,928,671,290 | $19,928,671,290 | $19,928,671,290 | |
| Area A ($ transfer from producers to consumers) | | $2,033,473,346 | $0 | $0 | $0 | |
| Area B (amount added to consumer surplus) | | $76,967,316 | $0 | $0 | $0 | |
| Incremental End User Increases (SLC + USF charges) | | $2,033,473,346 | $0 | $0 | $0 | |
| | | | | | | ***Cumulative Gain Over Eight Year Plan*** |
| Incremental Annual Net Benefit (Area A + Area B - End User incr) | | $76,967,316 | $0 | $0 | $0 | |
| Run-rate relative to base | | $76,967,316 | $76,967,316.32 | $76,967,316.32 | $76,967,316.32 | **$615,738,531** |
| Incremental Monthly Net Benefit | | $6,413,943 | $0 | $0 | $0 | or **$6** |
| Run-rate relative to base | | $6,413,943 | $6,413,943 | $6,413,943 | $6,413,943 | per household |
| Monthly Net Gain per subscribing household (run-rate) | | $0.06 | $0.06 | $0.06 | $0.06 | |

| | |
|---|---|
| Households | 106,400,000 |
| USF assessment rate | 11% |

# Figure 9

## ICF Plan for USF Collections Reform: *WIRELESS CONSUMER WELFARE ANALYSIS*

| | Base Year | Step 1 | Step 2 | Step 3 | Steps 4&5 | |
|---|---|---|---|---|---|---|
| Wireless minutes per subscriber per month | 791 | 826 | 826 | 826 | 826 | |
| % Change | | 4.4% | 0.0% | 0.0% | 0.0% | |
| Estimated Price per wireless minute (w/ USF) * | $0.0352 | $0.0341 | $0.0341 | $0.0341 | $0.0341 | |
| % Change | | -3.3% | 0.0% | 0.0% | 0.0% | |
| Wireless price elasticity (β) | -1.29 | -1.29 | -1.29 | -1.29 | -1.29 | |
| Constant (A) in demand equation Q = A(P^β) | 10.5574 | 10.5574 | 10.5574 | 10.5574 | 10.5574 | |
| Minute-driven wireless revenues | $27.86 | $28.13 | $28.13 | $28.13 | $28.13 | |
| Subscribers @ 10% growth: | 170,431,172 | 187,474,289 | 206,221,718 | 226,843,889 | 249,528,278 | |
| Area A ($ transfer from producers to consumers) | | $0.9193 | $0.0000 | $0.0000 | $0.0000 | |
| Area B (amount added to consumer surplus) | | $0.0201 | $0.0000 | $0.0000 | $0.0000 | |
| Incremental end user charge increases | | $0.9193 | $0.0000 | $0.0000 | $0.0000 | |
| Net monthly benefit per subscriber | | $0.0201 | $0.0000 | $0.0000 | $0.0000 | |
| | | | | | | ***Cumulative Gain Over Eight Year Plan*** |
| Incremental Annual Net Benefit | | $45,162,420 | $0 | $0 | $0 | |
| Run-rate relative to base | | $45,162,420 | $45,162,420 | $45,162,420 | **$45,162,420** | **$361,299,357** |
| Incremental Monthly Net Benefit | | $3,763,535 | $0 | $0 | $0 | or **$2** |
| Run-rate relative to base | | $3,763,535 | $3,763,535 | $3,763,535 | $3,763,535 | per subscriber |
| Monthly Net Gain per subscriber (run-rate) | | $0.02 | $0.02 | $0.02 | **$0.02** | |

| | |
|---|---|
| Interstate percentage of wireless revenue | 30% |
| USF assessment rate | 11% |

* Figure excludes wireless revenues that are not related to minutes of use

# Attachment B

## ATTACHMENT B

## THE ICF PLAN WILL RESULT IN LOWER TELEPHONE BILLS

- The attached charts show that, even taking a purely static view of the impact of the ICF Plan on end-user's total telephone bills—*i.e.*, assuming that implementation of intercarrier compensation reform does not spur increased competitive pressure on rates—most end-users will see *lower rates*.

- Most urban wireline, rural wireline, and wireless consumers would enjoy overall rate decreases.

- Cable Modem users who have VoIP would see rate increases under a purely static analysis (primarily because those consumers would be contributing to the universal service fund for the first time). It is important to emphasize, however, that these increases will be substantially lower if the Commission adopts a number-based USF reform prior to the implementation of the ICF Plan.

- The lowest volume users of wireline and wireless services will see some small increases: about $1.33 per month for low volume rural wireline consumers, and $1.80 per month for low volume urban wireline consumers. It is important to emphasize, however, that these increases will be lower if the Commission adopts a number-based USF reform prior to the implementation of the ICF Plan.

- Moreover, many consumers who have low calling volumes in one month will be medium or even high volume users the next month, and thus many "low volume" consumers would still see rate reductions in some months.

- More importantly, all low-*income* consumers are fully protected under the ICF Plan: SLC increases are waived for Lifeline users, but those users would receive the full benefit of the elimination of intercarrier payments and the effect on toll services. Thus, as the charts show, Lifeline users would see substantial rate *reductions*.

- Finally, the real world is not static, and the ICF Plan will facilitate greater competition and more innovative offerings, which in turn will intensify pressure on rates. Many carriers may not be able to price their services to take full advantage of the ICF Plan's higher SLC caps. If the ICF Plan does spark more intense competition that forces carriers to lower their rates – as it should – then virtually all consumers will see lower rates under the ICF Plan than they do today.

**Assumptions for Developing Customer Impact Under the ICF's Per Unit Based Universal Service Contribution Methodology vis-à-vis Current Revenue Based Universal Service Contribution Methodology**

In developing these Customer Impact estimates, the ICF started with estimates of Per Unit Universal Service Contribution, current Revenue Based Contribution Factor, and Customer Bills from various Wireline and Wireless Services.

## Per Unit Contribution Under the ICF Plan

The ICF has estimated that total per unit universal service contribution at Step 5 of the ICF Plan would be $1.31 per unit per month. Baseline Program cost for that estimation is derived from the most recent four quarters (3rd Quarter 2004 through 2nd Quarter 2005) of the federal universal service program costs adjusted for any special reductions through unused Schools & Libraries fund ($6.9 Billion). Incremental universal service funding required to implement the ICF plan was estimated by the ICF national model ($2.7 Billion). The Total Program cost was derived by combining baseline and incremental universal service program costs ($9.6 billion @ Step 5). The Contribution Base (i.e. Units) for that estimation consist of Telephone Numbers and Network Access Connection that includes a tiered capacity-based contribution obligation for non-circuit-switched dedicated connections.

## Current Revenue Based Contribution Factor

The ICF has estimated that the current average revenue based contribution factor would be 0.105 (or 10.5%). Program cost (i.e. Baseline) for that estimation is derived from the most recent four quarters (3rd Quarter 2004 through 2nd Quarter 2005) of federal universal service program costs adjusted for any special reductions through unused Schools & Libraries fund ($6.9 Billion). Contribution Base revenues are derived from the most recent four quarters of published data from quarterly FCC Public Notices (3rd Quarter 2004 through 2nd Quarter 2005). FCC's methodologies were used to derive the final factor.

## Customer Bills

Conservative and realistic assumptions were used to develop customer bills from different services. For sake of simplicity, only the most relevant items of the bills are incorporated. Local, State, and Federal taxes and surcharges are not relevant for this comparative analysis. It is also assumed that VoIP customers need a broadband connection (Cable Modem or DSL) and do not need a wireline connection – Local or Long Distance. Following are brief descriptions for each of those services represented in the analysis.

- **Wireline Local**: Average urban wireline local residential customer bill assumed to have three components -- Basic Local $15.00, a Features $5.00, and a Subscriber Line Charge of $6.00. The assumption for rural wireline local

customer bill -- Basic $11.00, Feature $5.00, and Subscriber Line Charge of $6.50.

- **Wireline Toll** (I.e. Long Distance): Customers toll bill assumed to have two major components – IntraLATA Toll and InterLATA Toll. Assumptions about IntraLATA toll varies from $2.00 to $10.00 per month depending on the size (small, medium, and high) and type (urban or rural) of customers. On an average, 30% of IntraLATA toll charges are directly attributed to access charges. Assumption about InterLATA toll varies from $3.00 to $60.00 per month depending on the size (small, medium, and high) and type (urban or rural) of customers. On an average 22% of InterLATA toll charges are directly attributed to access charges. In addition, all toll customers (excepting Lifeline subscribers) are expected to pay a flat fee of $3.00 per month (i.e. MRC). Only Interstate InterLATA toll revenues are assessable under the current revenue based contribution methodology. As a result, 70% of InterLATA toll and 100% of MRC revenues are assumed to be Interstate. Note: It is also assumed that by the time they reach STEP 5 of the ICF Plan all carriers will flow through 100% of their realized access savings through lower toll charges.

- **Wireless Subscribers**: Wireless customers are separated in three user segments – Low, Medium, and High. Low users have an average monthly bill of $30.00 per line, Medium users $50.00, and High users $99.99. Only 28.5 percent of those revenues are assumed to be interstate and therefore assessable under the current revenue based contribution methodology.

- **DSL Subscribers**: Average monthly bill of DSL subscribers are assumed to be $35.00. Per industry estimate, 60% of those revenues are assessable under the current revenue based contribution methodology.

- **Cable Modem Subscribers**: Average monthly bill of Cable Modem Subscribers are assumed to be $40.00. Per FCC rule, cable modem revenues are exempted from the current revenue based contribution methodology.

- **VoIP Subscribers**: Average flat monthly fee for VoIP based long distance calling assumed to be $25.00 per month. Per FCC rule, VoIP service revenues are exempted from the current revenue based contribution methodology.

# Customers Monthly Impact: Before and After ICF

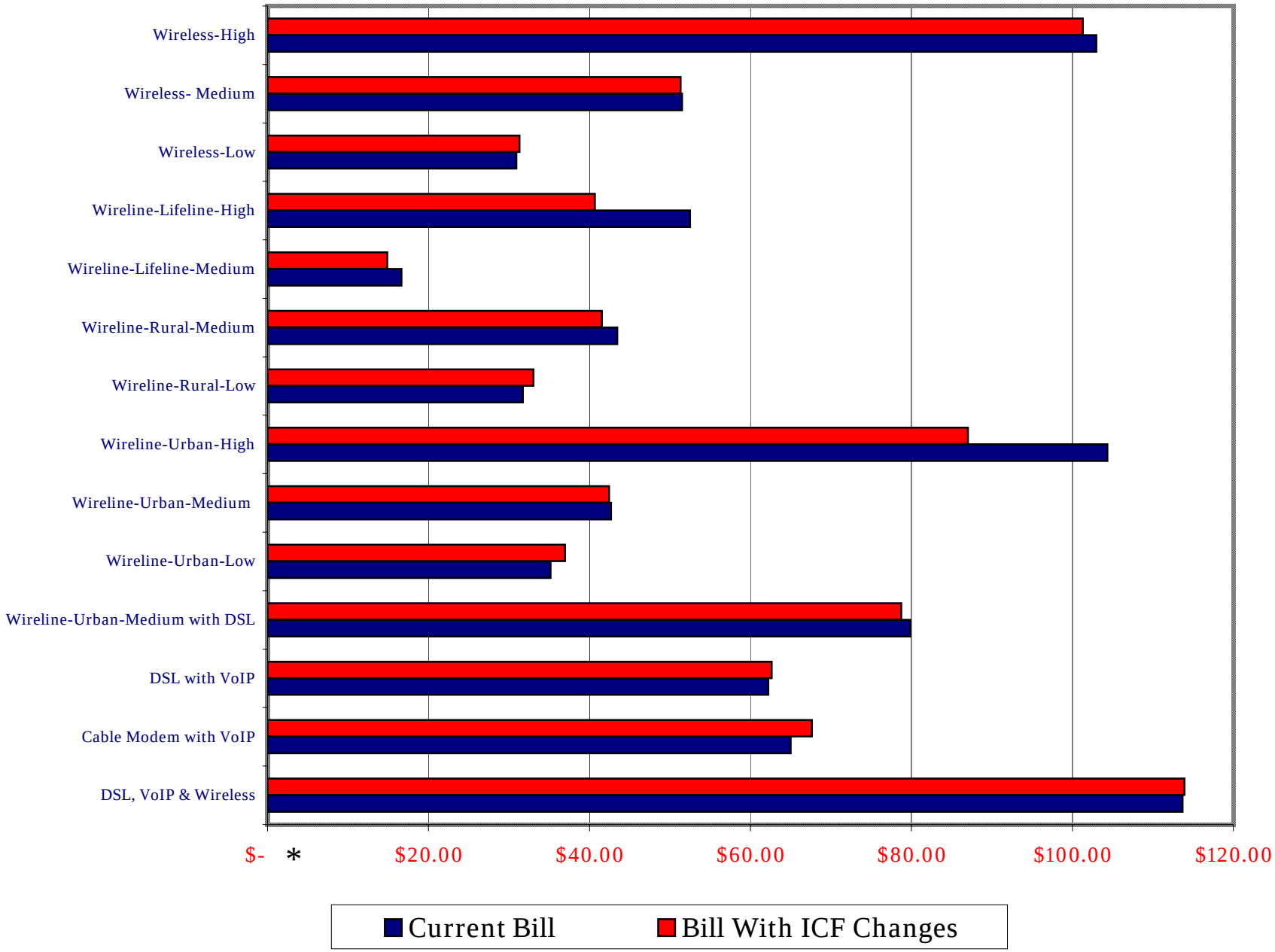


* - Service price includes service charges, Subscriber Line Charges, recurring monthly charges, and Federal USF surcharges. This does **not** include taxes, other fees, or other surcharges.

**Summary Matrix**

| | Customer Type | Customers Monthly Service Price | | |
|---|---|---|---|---|
| | | Current | With ICF | Net Increase (+) / Decrease (-) |
| 1 | DSL, VoIP & Wireless | $ 113.70 | $ 113.93 | $ 0.23 |
| 2 | Cable Modem with VoIP | $ 65.00 | $ 67.62 | $ 2.62 |
| 3 | DSL with VoIP | $ 62.21 | $ 62.62 | $ 0.42 |
| 4 | Wireline-Urban-Medium with DSL | $ 79.89 | $ 78.74 | $ (1.14) |
| 5 | Wireline-Urban-Low | $ 35.17 | $ 36.97 | $ 1.80 |
| 6 | Wireline-Urban-Medium | $ 42.68 | $ 42.43 | $ (0.25) |
| 7 | Wireline-Urban-High | $ 104.36 | $ 87.03 | $ (17.33) |
| 8 | Wireline-Rural-Low | $ 31.72 | $ 33.05 | $ 1.33 |
| 9 | Wireline-Rural-Medium | $ 43.45 | $ 41.55 | $ (1.90) |
| 10 | Wireline-Lifeline-Medium | $ 16.65 | $ 14.88 | $ (1.77) |
| 11 | Wireline-Lifeline-High | $ 52.49 | $ 40.68 | $ (11.81) |
| 12 | Wireless-Low | $ 30.90 | $ 31.31 | $ 0.41 |
| 13 | Wireless- Medium | $ 51.50 | $ 51.31 | $ (0.19) |
| 14 | Wireless-High | $ 102.98 | $ 101.30 | $ (1.68) |

Joe Q. Public
123 Main Street

## Broadband Service Price: DSL

| Charges | Today's Rules | With ICF Plan (at Step 5) |
|---|---|---|
| Basic Monthly Charge for DSL Service | $35.00 | $35.00 |
| Federal Universal Service Charge | $2.21 | $1.31 |
| Total Broadband Charges | $37.21 | $36.31 |

## VoIP Service Price

| Charges | Today's Rules | With ICF Plan (at Step 5) |
|---|---|---|
| Unlimited Voice Calls (VoIP) | $25.00 | $25.00 |
| Federal Universal Service Charge | $0.00 | $1.31 |
| Total VOIP Charges | $25.00 | $26.31 |

## Wireless Service Price

| Charges | Today's Rules | With ICF Plan (at Step 5) |
|---|---|---|
| Monthly Recurring Charge | $50.00 | $50.00 |
| Federal Universal Service Charge | $1.50 | $1.31 |
| Total Wireless Charges | $51.50 | $51.31 |

## CONSUMER IMPACT

| | |
|---|---|
| Combined Service Price Without ICF Plan | $113.70 |
| Combined Service Price With ICF Plan | $113.93 |
| Net Increase (+): | $0.23 |

***Cable Modem with VOIP***

Joe Q. Public
123 Main Street

## Broadband Service Price: Cable Modem

| Charges | Today's Rules | With ICF Plan (at Step 5) |
|---|---|---|
| Basic Monthly Charge for Cable Modem | $40.00 | $40.00 |
| Federal Universal Service Charge | $0.00 | $1.31 |
| Total Broadband Charges | $40.00 | $41.31 |

## VoIP Service Price

| Charges | Today's Rules | With ICF Plan (at Step 5) |
|---|---|---|
| Unlimited Voice Calls (VoIP) | $25.00 | $25.00 |
| Federal Universal Service Charge | $0.00 | $1.31 |
| Total VOIP Charges | $25.00 | $26.31 |

## CONSUMER IMPACT

| | |
|---|---|
| Combined Service Price Without ICF Plan | $65.00 |
| Combined Service Price With ICF Plan | $67.62 |
| Net Increase (+): | $2.62 |

***DSL with VOIP***

Joe Q. Public
123 Main Street

## Local Telephone Service Price

| Charges | Today's Rules | With ICF Plan (at Step 5) |
|---|---|---|
| Basic Monthly Charge | $15.00 | $15.00 |
| Features | $5.00 | $5.00 |
| Subscriber Line Charge (SLC) | $6.00 | $8.92 |
| Federal Universal Service Charge | $0.63 | $1.31 |
| Total Local Charges | $26.63 | $30.23 |

## Broadband Service Price: DSL

| Charges | Today's Rules | With ICF Plan (at Step 5) |
|---|---|---|
| Basic Monthly Charge for DSL Service | $35.00 | $35.00 |
| Federal Universal Service Charge | $2.21 | $1.31 |
| Total Broadband Charges | $37.21 | $36.31 |

## VoIP Service Price

| Charges | Today's Rules | With ICF Plan (at Step 5) |
|---|---|---|
| Unlimited Voice Calls (VoIP) | $25.00 | $25.00 |
| Federal Universal Service Charge | $0.00 | $1.31 |
| Total VOIP Charges | $25.00 | $26.31 |

## CONSUMER IMPACT

| | |
|---|---|
| Combined Service Price Without ICF Plan | $62.21 |
| Combined Service Price With ICF Plan | $62.62 |
| Net Increase (+): | $0.42 |

***Wireline -Urban.-Medium w DSL***

Joe Q. Public
123 Main Street

## Local Telephone Service Price

| Charges | Without ICF Plan | With ICF Plan |
|---|---|---|
| Basic Monthly Charge | $15.00 | $15.00 |
| Features | $5.00 | $5.00 |
| Subscriber Line Charge (SLC) | $6.00 | $8.92 |
| Federal Universal Service Charge | $0.63 | $1.31 |
| Total Local Charges | $26.63 | $30.23 |

## Broadband Service Price

| Charges | Without ICF Plan | With ICF Plan |
|---|---|---|
| Basic Monthly Charge | $35.00 | $35.00 |
| Federal Universal Service Charge | $2.21 | $1.31 |
| Total Broadband Charges | $37.21 | $36.31 |

## Long Distance Telephone Service Price

| Charges | Without ICF Plan | With ICF Plan |
|---|---|---|
| IntraLATA Toll | $2.00 | $1.40 |
| InterLATA Toll | $10.00 | $7.80 |
| MRC | $3.00 | $3.00 |
| Federal Universal Service Charge | $1.05 | $0.00 |
| Total Long Distance Charges | $16.05 | $12.20 |

## CONSUMER IMPACT

| | |
|---|---|
| Combined Service Price Without ICF Plan | $79.89 |
| Combined Service Price With ICF Plan | $78.74 |
| Net Decrease (-): | $1.14 |

Joe Q. Public
123 Main Street

## Local Telephone Service Price

| Charges | Today's Rules | With ICF Plan (at Step 5) |
|---|---|---|
| Basic Monthly Charge | $15.00 | $15.00 |
| Features | $5.00 | $5.00 |
| Subscriber Line Charge (SLC) | $6.00 | $8.92 |
| Federal Universal Service Charge | $0.63 | $1.31 |
| Total Local Charges | $26.63 | $30.23 |

## Long Distance Telephone Service Price

| Charges | Today's Rules | With ICF Plan (at Step 5) |
|---|---|---|
| IntraLATA Toll | $2.00 | $1.40 |
| InterLATA Toll | $3.00 | $2.34 |
| MRC | $3.00 | $3.00 |
| Federal Universal Service Charge | $0.54 | $0.00 |
| Total Long Distance Charges | $8.54 | $6.74 |

## CONSUMER IMPACT

| | |
|---|---|
| Combined Service Price Without ICF Plan | $35.17 |
| Combined Service Price With ICF Plan | $36.97 |
| Net Increase (+): | $1.80 |

***Wireline -Urban.-Medium***

Joe Q. Public
123 Main Street

## Local Telephone Service Price

| Charges | Today's Rules | With ICF Plan (at Step 5) |
|---|---|---|
| Basic Monthly Charge | $15.00 | $15.00 |
| Features | $5.00 | $5.00 |
| Subscriber Line Charge (SLC) | $6.00 | $8.92 |
| Federal Universal Service Charge | $0.63 | $1.31 |
| Total Local Charges | $26.63 | $30.23 |

## Long Distance Telephone Service Price

| Charges | Today's Rules | With ICF Plan (at Step 5) |
|---|---|---|
| IntraLATA Toll | $2.00 | $1.40 |
| InterLATA Toll | $10.00 | $7.80 |
| MRC | $3.00 | $3.00 |
| Federal Universal Service Charge | $1.05 | $0.00 |
| Total Long Distance Charges | $16.05 | $12.20 |

## CONSUMER IMPACT

| | |
|---|---|
| Combined Service Price Without ICF Plan | $42.68 |
| Combined Service Price With ICF Plan | $42.43 |
| Net Decrease (-): | $0.25 |

***Wireline -Urban.-High***

Joe Q. Public
123 Main Street

## Local Telephone Service Price

| Charges | Today's Rules | With ICF Plan (at Step 5) |
|---|---|---|
| Basic Monthly Charge | $15.00 | $15.00 |
| Features | $5.00 | $5.00 |
| Subscriber Line Charge (SLC) | $6.00 | $8.92 |
| Federal Universal Service Charge | $0.63 | $1.31 |
| Total Local Charges | $26.63 | $30.23 |

## Long Distance Telephone Service Price

| Charges | Today's Rules | With ICF Plan (at Step 5) |
|---|---|---|
| IntraLATA Toll | $10.00 | $7.00 |
| InterLATA Toll | $60.00 | $46.80 |
| MRC | $3.00 | $3.00 |
| Federal Universal Service Charge | $4.73 | $0.00 |
| Total Long Distance Charges | $77.73 | $56.80 |

## CONSUMER IMPACT

| | |
|---|---|
| Combined Service Price Without ICF Plan | $104.36 |
| Combined Service Price With ICF Plan | $87.03 |
| Net Decrease (-): | $17.33 |

Joe Q. Public
123 Main Street

## Local Telephone Service Price

| Charges | Today's Rules | With ICF Plan (at Step 5) |
|---|---|---|
| Basic Monthly Charge | $11.00 | $11.00 |
| Features | $5.00 | $5.00 |
| Subscriber Line Charge (SLC) | $6.50 | $9.00 |
| Federal Universal Service Charge | $0.68 | $1.31 |
| Total Local Charges | $23.18 | $26.31 |

## Long Distance Telephone Service Price

| Charges | Today's Rules | With ICF Plan (at Step 5) |
|---|---|---|
| IntraLATA Toll | $2.00 | $1.40 |
| InterLATA Toll | $3.00 | $2.34 |
| MRC | $3.00 | $3.00 |
| Federal Universal Service Charge | $0.54 | $0.00 |
| Total Long Distance Charges | $8.54 | $6.74 |

## CONSUMER IMPACT

| | |
|---|---|
| Combined Service Price Without ICF Plan | $31.72 |
| Combined Service Price With ICF Plan | $33.05 |
| Net Increase (+): | $1.33 |

***Wireline -Rural -Medium***

Joe Q. Public
123 Main Street

## Local Telephone Service Price

| Charges | Today's Rules | With ICF Plan (at Step 5) |
|---|---|---|
| Basic Monthly Charge | $11.00 | $11.00 |
| Features | $5.00 | $5.00 |
| Subscriber Line Charge (SLC) | $6.50 | $9.00 |
| Federal Universal Service Charge | $0.68 | $1.31 |
| Total Local Charges | $23.18 | $26.31 |

## Long Distance Telephone Service Price

| Charges | Today's Rules | With ICF Plan (at Step 5) |
|---|---|---|
| IntraLATA Toll | $3.00 | $2.10 |
| InterLATA Toll | $13.00 | $10.14 |
| MRC | $3.00 | $3.00 |
| Federal Universal Service Charge | $1.27 | $0.00 |
| Total Long Distance Charges | $20.27 | $15.24 |

## CONSUMER IMPACT

| | |
|---|---|
| Combined Service Price Without ICF Plan | $43.45 |
| Combined Service Price With ICF Plan | $41.55 |
| Net Decrease (-): | $1.90 |

***Wireline -Lifeline -Medium***

Joe Q. Public
123 Main Street

## Local Telephone Service Price

| Charges | Today's Rules | With ICF Plan (at Step 5) |
|---|---|---|
| Basic Monthly Charge | $10.28 | $10.28 |
| Features | $0.00 | $0.00 |
| Subscriber Line Charge (SLC) | $0.00 | $0.00 |
| Federal Universal Service Charge | $0.00 | $0.00 |
| Total Local Charges | $10.28 | $10.28 |

## Long Distance Telephone Service Price

| Charges | Today's Rules | With ICF Plan (at Step 5) |
|---|---|---|
| IntraLATA Toll | $1.00 | $0.70 |
| InterLATA Toll | $5.00 | $3.90 |
| MRC | $0.00 | $0.00 |
| Federal Universal Service Charge | $0.37 | $0.00 |
| Total Long Distance Charges | $6.37 | $4.60 |

## CONSUMER IMPACT

| | |
|---|---|
| Combined Service Price Without ICF Plan | $16.65 |
| Combined Service Price With ICF Plan | $14.88 |
| Net Decrease (-): | $1.77 |

***Wireline-Lifeline-High***

Joe Q. Public
123 Main Street

## Local Telephone Service Price

| Charges | Today's Rules | With ICF Plan (at Step 5) |
|---|---|---|
| Basic Monthly Charge | $10.28 | $10.28 |
| Features | $0.00 | $0.00 |
| Subscriber Line Charge (SLC) | $0.00 | $0.00 |
| Federal Universal Service Charge | $0.00 | $0.00 |
| Total Local Charges | $10.28 | $10.28 |

## Long Distance Telephone Service Price

| Charges | Today's Rules | With ICF Plan (at Step 5) |
|---|---|---|
| IntraLATA Toll | $10.00 | $7.00 |
| InterLATA Toll | $30.00 | $23.40 |
| MRC | $0.00 | $0.00 |
| Federal Universal Service Charge | $2.21 | $0.00 |
| Total Long Distance Charges | $42.21 | $30.40 |

## CONSUMER IMPACT

| | |
|---|---|
| Combined Service Price Without ICF Plan | $52.49 |
| Combined Service Price With ICF Plan | $40.68 |
| Net Decrease (-): | $11.81 |

Joe Q. Public
123 Main Street

## Wireless Service Price

$30 Nationwide Calling Plan

| Description of Service | Today's Rules | With ICF Plan (at Step 5) |
|---|---|---|
| Basic (Monthly Recuring Charge) | $30.00 | $30.00 |
| Vertical Features (CID, VM, Etc.) | Included | Included |
| Subscriber Line Charge (SLC) | N/A | N/A |
| Federal Universal Service Charge | $0.90 | $1.31 |
| Total Wireless Charges | $30.90 | $31.31 |

## CONSUMER IMPACT

| | |
|---|---|
| Wireless Service Price Without ICF Plan | $30.90 |
| Wireless Service Price With ICF Plan | $31.31 |
| Net Increase (+): | $0.41 |

**Wireless -Medium**

Joe Q. Public
123 Main Street

## Wireless Service Price

$50 Nationwide Calling Plan

| Description of Service | Today's Rules | With ICF Plan (at Step 5) |
|---|---|---|
| Basic (Monthly Recuring Charge) | $50.00 | $50.00 |
| Vertical Features (CID, VM, Etc.) | Included | Included |
| Subscriber Line Charge (SLC) | N/A | N/A |
| Federal Universal Service Charge | $1.50 | $1.31 |
| Total Wireless Charges | $51.50 | $51.31 |

## CONSUMER IMPACT

| | |
|---|---|
| Wireless Service Price Without ICF Plan | $51.50 |
| Wireless Service Price With ICF Plan | $51.31 |
| Net Decrease (-): | $0.19 |

**Wireless -High**

Joe Q. Public
123 Main Street

## Wireless Service Price

$99.99 Nationwide Calling Plan

| Description of Service | Today's Rules | With ICF Plan (at Step 5) |
|---|---|---|
| Basic (Monthly Recuring Charge) | $99.99 | $99.99 |
| Vertical Features (CID, VM, Etc.) | Included | Included |
| Subscriber Line Charge (SLC) | N/A | N/A |
| Federal Universal Service Charge | $2.99 | $1.31 |
| Total Wireless Charges | $102.98 | $101.30 |

## CONSUMER IMPACT

| | |
|---|---|
| Wireless Service Price Without ICF Plan | $102.98 |
| Wireless Service Price With ICF Plan | $101.30 |
| Net Decrease (-): | $1.68 |