TUFONE, INC.
73 Ferry Street
Newark, NJ 07105
973-854-0537

November 24, 2005

Electronic Filing – via ECFS

Marlene H. Dortch
Executive Secretary
Federal Communications Commission
445 12th Street, SW
Washington, DC 20554

RE: 2005 Interconnected Voice Over Internet Protocol 911 Compliance Letter of Tufone, Inc.

WC Docket No. 05-196

Dear Ms. Dortch:

Pursuant to 47 C.F.R. § 9.5(f) and to the November 7, 2005 Public Notice in the above referenced proceeding, Tufone, Inc. respectfully submits this Compliance Letter. Please refer any questions or correspondence regarding the report to me at the address below.

Sincerely,

/s/
Moses Apsan
President & CEO
Tufone, Inc.
mapsan@tufone.com

cc via email to:

- Kathy Berthot, Deputy Chief, Spectrum Enforcement Division, Enforcement Bureau, Federal Communications Commission, by email to kathy.berthot@fcc.gov.
- Janice Myles, Competition Policy Division, Wireline Competition Bureau, Federal Communications Commission by e-mail to janice.myles@fcc.gov.
- Commission's copy contractor, Best Copy and Printing, Inc. (BCPI), via e-mail to fcc@bcpiweb.com.

2005 Interconnected Voice Over Internet Protocol 911 Compliance Letter
WC Docket No. 05-196

Tufone, Inc.

November 28, 2005

Prior to commencing of operation, on April 2005, we understood the significance of E911 and the security of our country as well as the protection of our customers in the event of an emergency. To this end we studied the E911 industry, spoke to may people including those a NENA before making our choice to use HBF Group, Inc (HBF) as our 911 service provider. This choice was primarily driven by the significant experience HBF has had in the field and the fact that they provide E911 service for many respected companies, both VOIP and others. Recently its i-911 Safety Response Centers, deployed with Vonage Canada, met the requirements of the Canadian Radio-Television and Telecommunications Commission (CRTC) mandate for emergency response systems for Voice over IP (VoIP) providers.

Prior to the initial FCC order we were well on our way to establish a hybrid form of providing customer information to the PSAPs. Given the short time permitted to accomplish the goal of full E911 compliance, HBF has created an interim system that protects the integrity of the system and satisfies the 911 expectation that telephone users have.

1) 911 Solution:

This description should include quantification, on a percentage basis, of the number of subscribers to whom the provider is able to provide 911 service in compliance with the rules established in the VoIP 911 Order:

Through data synchronization and call delivery with HBF, Tufone is able to deliver basic 911 services to 100% of its VOIP (Tufone) customers. The current I1 solution is able to deliver emergency calls to 100% of the PSAPs via a 10-digit number. This solution provides 100% coverage in the United States. In the event a call cannot be delivered directly to the PSAP the caller is routed to a national call center with trained emergency operators. This 24/7 support is beyond the requirements of the FCC order.

HBF "i-911™ Voice-over- Internet-Protocol (VoIP) solution, already deployed through seven VoIP service providers, by adding i-911 Safety Response Centers to handle VoIP emergency calls. The i-911 VoIP solution now routes 9-1-1 calls directly to the i-911 Safety Response Centers where they are answered by a live operator who will verify the caller's location and route the call to the correct Public Safety Answering Point (PSAP) while staying on the phone with the caller to confirm that help is received. The i-911 Safety Response Centers, which are located throughout Canada and the U.S., are staffed 24 hours a day, 7 days a week and support multiple languages. A Service Provider can choose to have 9-1-1 calls from subscribers go directly to a live Safety Response Center operator. This is particularly important for nomadic users who change the location of their VoIP device, but may not have updated their current location information. It is

also a benefit for subscribers who have not opted-in for 9-1-1 service since they can be routed directly to the i-911 Safety Response Center.

HBF's i-911 Safety Response Centers meet the Canadian Radiotelevision and Telecommunications Commission (CRTC) mandate for VoIP Providers and are a supplement to the United States offering as a step towards the FCC's order for Enhanced 9-1-1. VoIP has received some negative publicity with regards to 9-1-1, as the adoption of this technology has outpaced current 9-1-1 regulations and network access. The FCC requires all VoIP providers to have E9-1-1 by the end of November 2005. HBF is diligently working to complete E9-1-1 solution within the FCC's time frame, as network components are made available.

1-a. 911 Routing Information/Connectivity to Wire line E911 Network:
A detailed statement as to whether the provider is transmitting, as specified in Paragraph 42 of the *VoIP 911 Order*, "all 911 calls to the appropriate PSAP, designated statewide default answering point, or appropriate local emergency authority utilizing the Selective Router, the trunk line(s) between the Selective Router and the PSAP, and such other elements of the Wire line E911 Network as are necessary in those areas where Selective Routers are utilized." If the provider is not transmitting all 911 calls to the correct answering point in areas where Selective Routers are utilized, this statement should include a detailed explanation why not. In addition, the provider should quantify the number of Selective Routers to which it has interconnected, directly or indirectly, as of November 28, 2005.

Access to selective routers for delivery of voice to PSAP is an extremely costly and time-consuming procedure. This requires physical interconnection to over 650 selective routers owned by the ILECS as well as conversion of the call from IP to TDM. There are very few carriers capable of meeting this requirement and most are CLECs, such as Level 3, Global Crossing, and XO. However, none have 100% coverage and all have varying levels of support. Each requires use of their own DIDs in order to use their E911 infrastructure. They also require substantial upfront investments along with high recurring monthly charges. Finally, these existing solutions only support static numbers and cannot support out of area telephone numbers (foreign NPA/NXXs). For that we need a VPC provider.

Our third-party provider, who is also a VPC provider, has contracted with one of these CLECs with access to over 70% of the US population and is in negotiations to interconnect with other CLECs in order to reach the rest of the US population. The process of converting from the I1 solution to the I2 solution is underway. However, it will not be complete by November 28th.

1-b. Transmission of ANI and Registered Location Information: A detailed statement as to whether the provider is transmitting via the Wireline E911 Network the 911 caller's ANI and Registered Location to all answering points that are capable of receiving and processing this information. This information

should include: (i) a quantification, on a percentage basis, of how many answering points within the provider's service area are capable of receiving and processing ANI and Registered Location information that the provider transmits; (ii) a quantification of the number of subscribers, on a percentage basis, whose ANI and Registered Location are being transmitted to answering points that are capable of receiving and processing this information; and (iii) if the provider is not transmitting the 911 caller's ANI and Registered Location to all answering points that are capable of receiving and processing this information, a detailed explanation why not.

Our third-party provider has been actively involved in meeting the requirements of this order but given the short timeframes this is proving very difficult.

Delivery of ANI and registered location information to the PSAP requires connection agreements with all the ILECs, frame relay circuits to all the ALI databases, testing of links and data exchange, and loading of ESQKs into all the ALI databases. The circuit ordering timeframe is usually 4-6 weeks. Some of the smaller ILECs still do not have their VoIP ordering processes in place so no circuits have been ordered. Our third-party provider is installing these circuits but the 120 day timeframe from the FCC did not allow enough time to negotiate interconnection agreements with the ILECs and then order the circuits.

In addition, ESQKs have to be assigned and allocated. This issue current sits with the FCC to name an interim administrator for these non-dialable numbers. Without FCC guidance, it is nearly impossible to deploy services on a nationwide basis. This is stated in an ex parte filing from Tom Goode, Associate General Counsel of the Alliance for Telecommunications Solutions' (ATIS) Emergency Service Iterconnection Forum (ESIF), to the Honorable Kevin J. Martin, Chairman, Federal Communications Commission:

> *On September 8, 2005, the NANC submitted these recommendations to the Chief of the Wireline Competition Bureau for approval. Included in this submission was a timeframe indicating that pANI administration for VoIP needed to commence by October 3, 2005, in order for all involved parties to meet the Commission's November 28, 2005, deadline for VoIP E9-1-1 solutions. However, as of the date of this letter, the Interim Routing Number Authority has not been established.*
>
> ***In the absence of a centralized pANI administrator and guidelines, VoIP Service Providers (VSPs) and other parties developing VoIP E9-1-1 solutions may not be able to meet the November 28, 2005, deadline for E9-1-1 service.*** {Emphasis Added]. *This is contrary to ESIF's mission to advance emergency communications technology, and does not serve the public interest. In a significant part of the U.S., there is no mechanism for pANI administration. Without this administration, a VSP would need to use dialable numbers, an ineffective solution. Further, a VSP may not have access to these numbers on a nationwide basis, which could*

lead to additional delays in meeting the Commission's November 28, 2005, deadline.

ESIF recognizes that, even if the Commission were to approve the NANC recommendations quickly, a number of requests for extension of the November 28, 2005, deadline likely will still be filed. However, a delay in Commission action would likely further frustrate the implementation of VoIP E-9-1-1 solutions. The anticipated Interim RNA has indicated that it will need 30 days after the Commission's decision to begin pANI allocation. Further, based on feedback from VSPs and VoIP Positioning Center companies, the deployment and testing of these ESQKs will take another 60 to 90 days.

Finally, this solution requires testing with over 6000 PSAPs to meet the deadline. This takes time as each PSAP must be tested with each ESQK. Again the 120 day timeframe doesn't allow enough time to get interconnection agreements with each ILEC, provision circuits, create ESQK shell records, and then schedule/execute testing with 6000 PSAPs. Our third-party provider has this effort underway but it is time consuming. The wireless industry has had years to perform this same effort and they are not complete yet.

Until these issues are resolved, our third-party provider has developed a web-based solution that allows PSAPs to see the real-time ANI/ALI information for each VoIP call. This gives the PSAP access to callback information when the call is delivered via the I1 solution.

1-c. 911 Coverage: To the extent a provider has not achieved full 911 compliance with the requirements of the *VoIP 911 Order* in all areas of the country by November 28, 2005, the provider should: 1) describe in detail, either in narrative form or by map, the areas of the country, on a MSA basis, where it is in full compliance and those in which it is not; and 2) describe in detail its plans for coming into full compliance with the requirements of the order, including its anticipated timeframe for such compliance.

HBF is working on nationwide native VoIP E9-1-1 delivery in accordance with the Commission Order. However, based on the issues discussed above, full compliance has not yet been achieved. However, our third-party provider has been actively working with NENA, ATIS, the VON Coalition, as well as with every ILEC to complete the ESQK assignment process and finalize the ANI/ALI links. In addition, access to the selective routers is being achieved through partnerships with CLECs throughout the country. This is an extremely time-consuming and costly process which is multiplied given the tight timeframes.

2. Obtaining Initial Registered Location Information: A detailed description of all actions the provider has taken to obtain each existing subscriber's current Registered Location and each new subscriber's initial Registered Location. This information should include, but is not limited to, relevant dates and methods of contact with subscribers and quantification, on a percentage basis, of the number of subscribers from whom the provider has obtained the Registered Location.

Each customer at the point of sale for Tufone services provides the physical address where the CPE/TA will be put into service. Orders for service are not taken without this information. This address can be different than their billing, shipping or mailing addresses. The 911 Service Address is instantly transmitted via a real-time provisioning interface to HBF's Validation and Update Interface (VUI). The VUI includes a geocoding process as well as management of Master Street Address Guide (MSAG) validation and PSAP assignment. This API allows our subscribers to enter a new 911 address on our site and have instant verification that the address is valid and that 911 service is activated for the new site. This also allows the subscriber to have real-time error notices that will allow them to correct their address if there is an issue with it.

Tufone has the 911 Service Address for 100% of its VOIP customers.

3. Obtaining Updated Registered Location Information: A detailed description of the method(s) the provider has offered its subscribers to update their Registered Locations. This information should include a statement as to whether the provider is offering its subscribers at least one option for updating their Registered Location that permits them to use the same equipment that they use to access their interconnected VoIP service.

Tufone provides two (2) ways for a customer to update their 911 Service Address. The first is by calling Customer Service and asking a service agent to change it. The second is by accessing the CUSTOMER LOGIN area of the website where a prominent section called Dialing 911 is located followed by the statement "911 Dialing is NOT automatic. You must activate 911 Dialing for each number on your account. To activate 911 Dialing or Edit your 911 Dialing Address, click one of the links below."

4) Technical Solution for Nomadic Subscribers:

A detailed description of any technical solutions the provider is implementing or has implemented to ensure that subscribers have access to 911 service whenever they use their service nomadically.

We have a real-time interface between our platform and our third-party provider that allows instant address validation and PSAP assignment. This API allows our subscribers to enter a new 911 address on our site and have instant verification that the address is valid and that 911 service is activated for the new site. This also allows the subscriber to have real-time error notices that will allow them to correct their address if there is an issue with it. This allows for real-time support of nomadic subscribers. The HBF solution enables full support of nomadic usage of VoIP provided the user updates their address information upon arrival into a new location. Through the Validation and Update Interface (VUI) the i-911 solution enables the real-time provisioning (Geocoding and MSAG Validation) of the newly provisioned address and make available (assuming no errors) that user's information for delivery to the PSAP within minutes of receipt.

I-911 Diagram

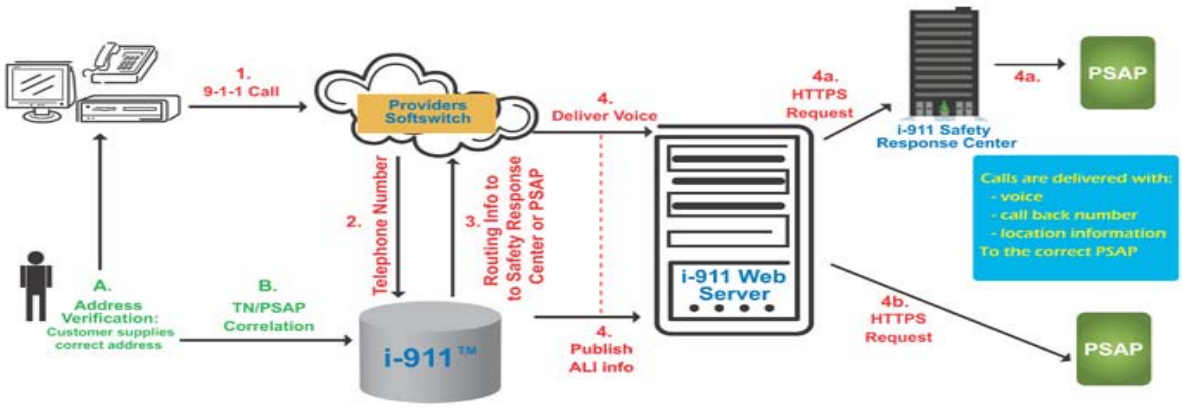
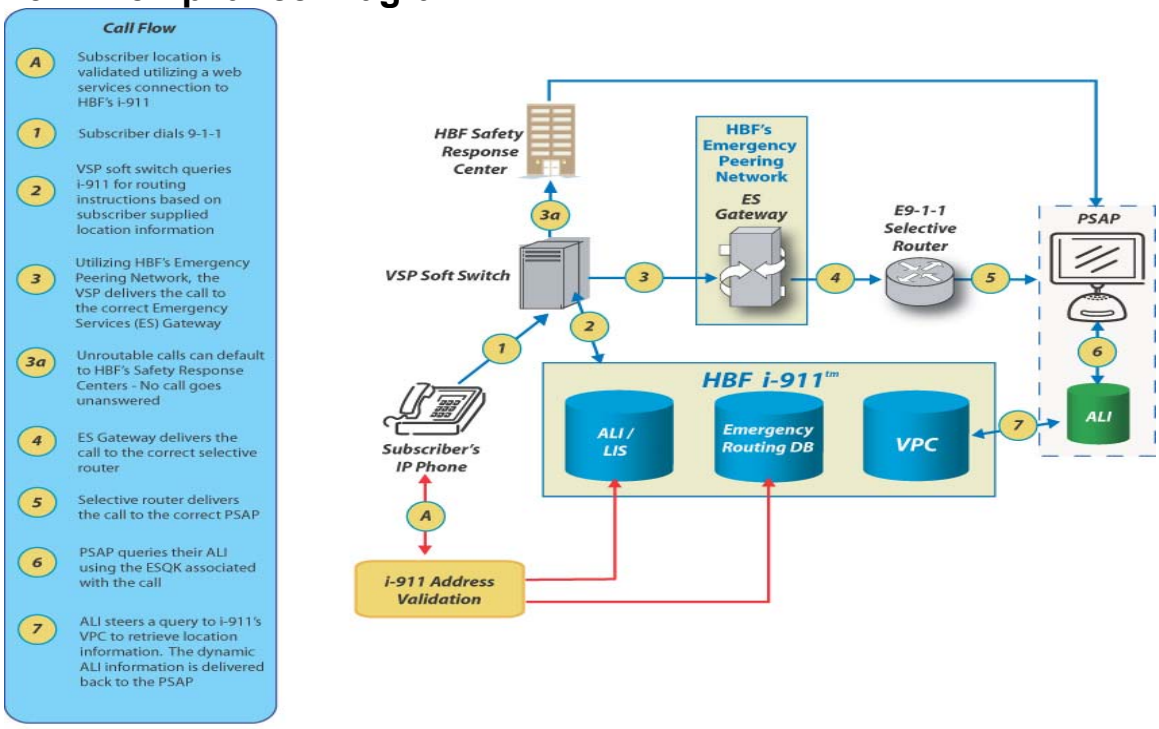
I-911 Compliance Diagram