Advantage Line Antenna Gain

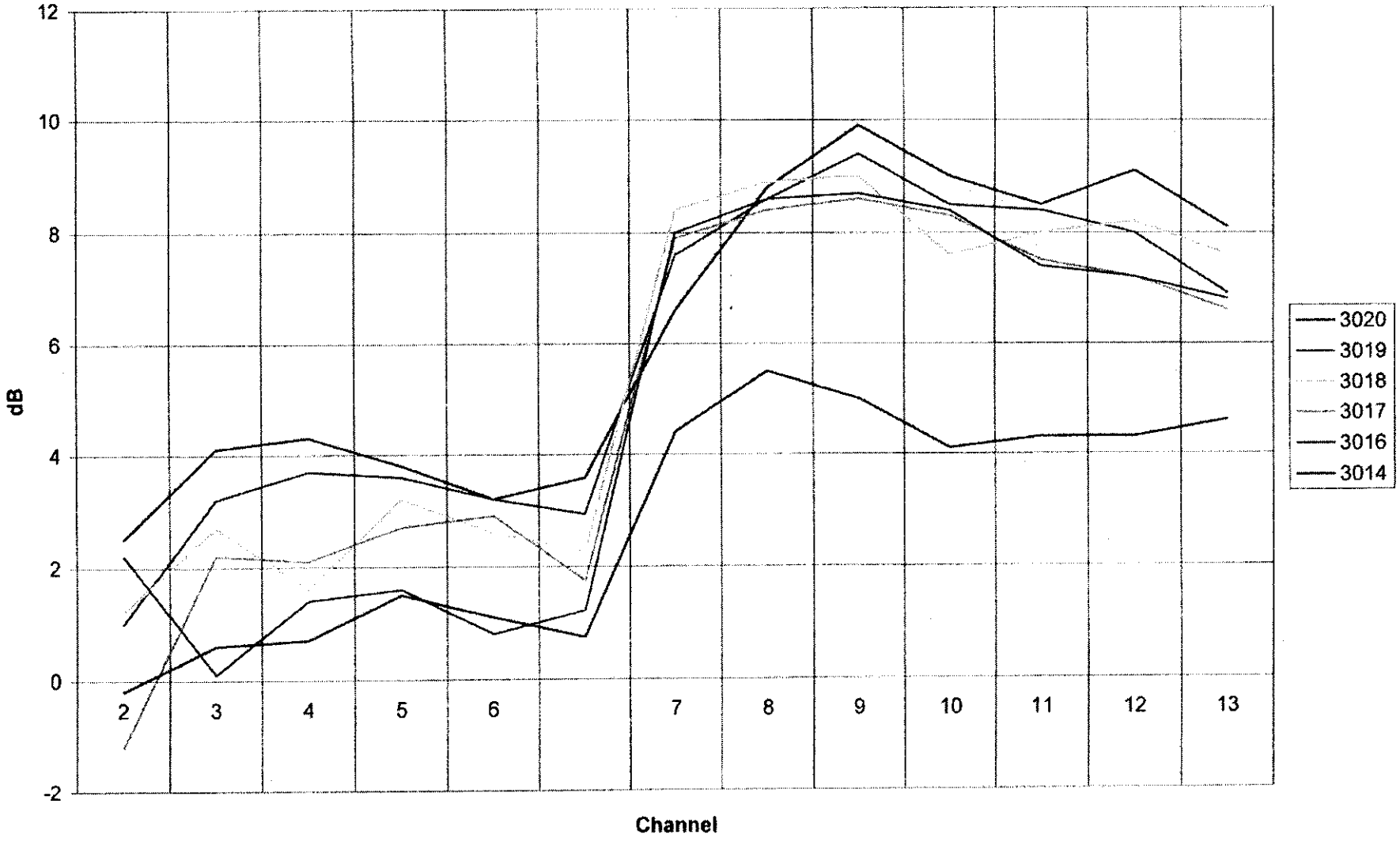

Antenna Model 2001

	Antenna Model	2001		
Channel		Gain	Length	27 inches
2		-2.8	Width	84.75 inches
3		-3.2		
4		-1.5		
5		-0.6		
6		0.2		
	Low band avg	-1.6		
7		3.1		
8		3.4		
9		2.2		
10		2.4		
11		3.8		
12		3.7		
13		1.6		
	High band avg	2.9		
14		3		
19		1.8		
27		2		
35		4.8		
43		2		
52		5.5		
60		6.8		
	uhf avg	3.7		

Gain in db over tuned dipole

Channel Master 4242 U/V Antenna

Ch	Freq	Half Power Beamwidth	F/B Ratio
2P	55.25	69	15.9
4P	67.25	69	19
6P	83.25	65	22.3
6S	87.75	71	18.6
FM	88	72	18.7
FM	98	68	13
FM	108	63	9.9
7P	175.25	24	11.9
9P	187.25	32	13.1
11P	199.25	38	16.7
13P	211.25	40	14.3
13S	215.75	35	12
	470	33	14.8
	500	50	17.7
	550	45	13.5
	600	34	13
	650	35	10.7
	700	34	18.5
	750	30	13.6
	800	24	13.2

CM 3010A

Pattern Summary

Frequency (MHz)	Channel	Half Power Beamwidth (Deg)	F/B Ratio (dB)
55.25	2	86	0.7
67.25	4	88	0.5
83.25	6	80	-1.1
	VHF L Avg=	85	VHF L Avg= 0.0
175.25	7	51	0.0
187.25	9	51	3.7
199.25	11	59	8.2
211.25	13	106	10.3
	VHF H Avg=	**66.75**	VHF H Avg= **5.6**
470	14	76	5.6
500	20	47	9.5
550	26	44	13.1
600	32	45	12.0
650	38	36	8.4
700	44	79	11.4
750	50	108	7.5
800	56	60	6.6
	UHF Avg.=	**62**	UHF Avg.= **9.3**

Gain Summary

Frequency (MHz)	Gain (dB)
55.25	-10.71
61.25	-9.31
67.25	-7.61
77.25	-3.33
83.25	-2.04
87.75	-0.94
VHF L Avg=	**-5.7**
175.25	0
181.25	0.66
187.25	1.25
193.25	2.08
199.25	0.02
205.25	-0.75
211.25	-1.10
215.75	-1.24
VHF H Avg=	**0.12**
470	-3.93
500	-2.26
550	-0.88
600	1.76
650	-2.69
700	-0.14
750	-2.60
800	-0.27
UHF Avg.=	**-1.38**

***CEMA Classification: Large Multi-Directional**

*Engineering Bulletin EIA/CEB-6-C March 26,1999

dedwards(Q:)\excel\UHFsummary sheet2

Winegard Antennas

WINEGARD®
Clearly the World's Best®

PLATINUM SERIES
HIGH DEFINITION VHF ANTENNA

engineering specifications

Model HD4053P

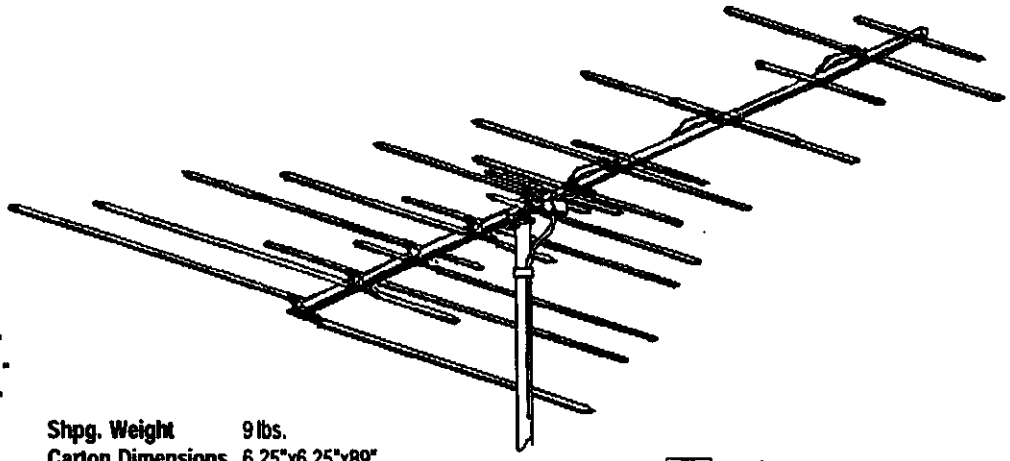

Active Elements	24		
Boom Length	111"		
Turning Radius	72.5"		
Maximum Width	110"		
Vertical Height	3"	**Shpg. Weight**	9 lbs.
Element Diameter	3/8"	**Carton Dimensions**	6.25"x6.25"x89"

Output Impedance: 75 ohm
Recommended Preamp: AP Series

"UPS in shield design is a registered trademark of United Parcel Service of America, Inc. used by permission."

Made in U.S.A.

GAIN	CH.2	CH.4	CH.6	CH.7	CH.9	CH.11	CH.13
dB over reference dipole	5.9	6.6	6.4	9.6	11.1	9.8	10.6
beamwidth at half power points	70°	69°	66°	37°	42°	43°	42°
front-to-back ratio	17dB	18dB	17dB	18dB	greater than 20dB	greater than 20dB	17dB

POLAR PATTERNS

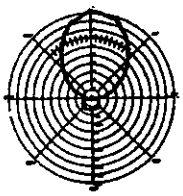
CH.2

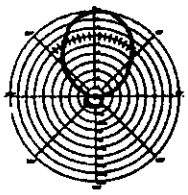
CH.4

CH.6

CH.7

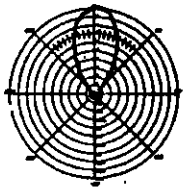
CH.9

CH.11

CH.13

Printed in U.S.A. Winegard Company, 3000 Kirkwood St., Burlington, IA 52601-2000 Rev. 4-02

WINEGARD®
Clearly the World's Best®

PLATINUM SERIES
HIGH DEFINITION VHF/UHF ANTENNA

engineering specifications

Model HD7210P
GHOST KILLER™

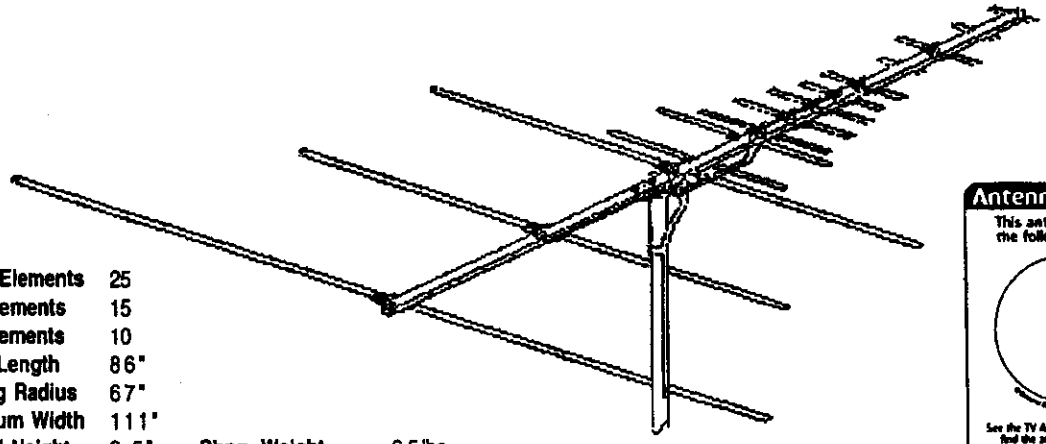

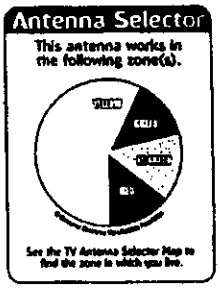

Active Elements	25		
UHF Elements	15		
VHF Elements	10		
Boom Length	86"		
Turning Radius	67"		
Maximum Width	111"		
Vertical Height	3.5"	Shpg. Weight	6.5 lbs.
Element Diameter	3/8"	Carton Dimensions	6.25"x6.25"x89"

"UPS in shield design is a registered trademark of United Parcel Service of America, Inc. used by permission."

Output Impedance: 75 ohm
Recommended Preamp: AP Series

Made in U.S.A.

CHANNEL	CH.2	CH.4	CH.6	CH.7	CH.9	CH.11	CH.13	CH.14	CH.32	CH.50	CH.69
beamwidth at half power points	73°	73°	70°	53°	50°	48°	42°	50°	50°	56°	31°
front-to-back ratio	greater than 20dB	20dB	19dB	17dB	17dB	15dB	10.5dB	8dB	17dB	13dB	9dB

POLAR PATTERNS

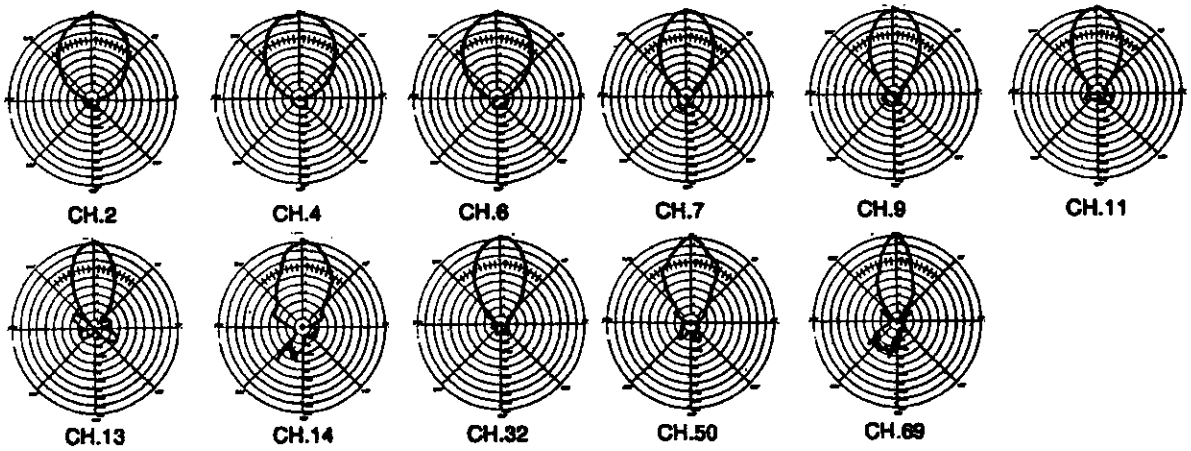

Printed in U.S.A. Winegard Company, 3000 Kirkwood St., Burlington, IA 52601-2000 Rev. 6/02

WINEGARD®
Clearly the World's Best®

PLATINUM SERIES
HIGH DEFINITION FM ANTENNA

engineering specifications

Model HD6065P

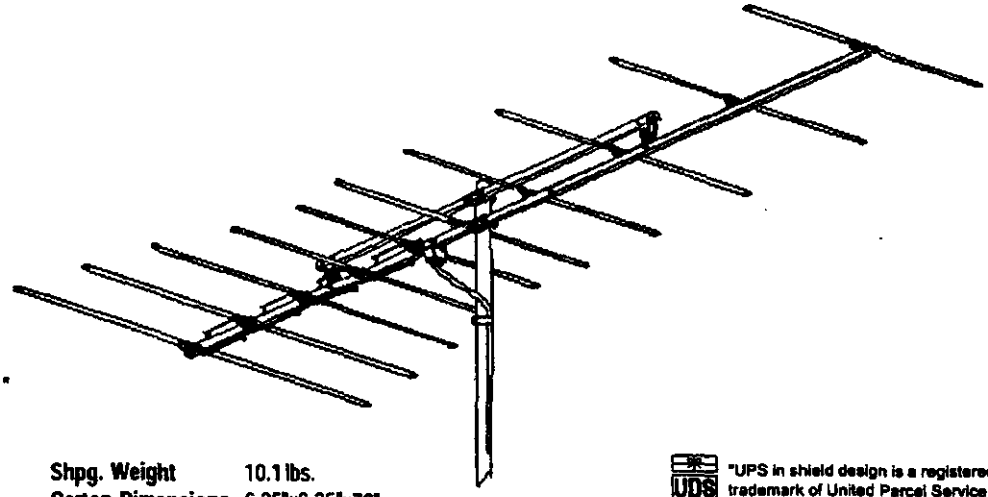

Active Elements	10		
Boom Length	127"		
Turning Radius	76"		
Maximum Width	69"		
Vertical Height	6"	**Shpg. Weight**	10.1 lbs.
Element Diameter	3/8"	**Carton Dimensions**	6.25"x6.25"x76"

"UPS in shield design is a registered trademark of United Parcel Service of America, Inc. used by permission."

Output Impedance: 75 ohm
Recommended Preamp: AP Series

Made in U.S.A.

GAIN	88MHz	98MHz	108MHz
dB over reference dipole	9.4	10.6	10.6
beamwidth at half power points	59°	53°	48°
front-to-back ratio	18dB	19dB	20dB

POLAR PATTERNS

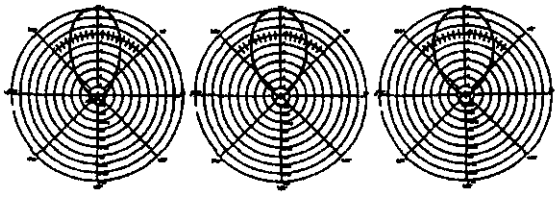

88MHz 98MHz 108MHz

Printed in U.S.A. Winegard Company, 3000 Kirkwood St., Burlington, IA 52601-2000 Rev. 4/02

WINEGARD®
Clearly the World's Best®

PLATINUM SERIES
HIGH DEFINITION VHF/UHF ANTENNA

engineering specifications

Model HD7078P

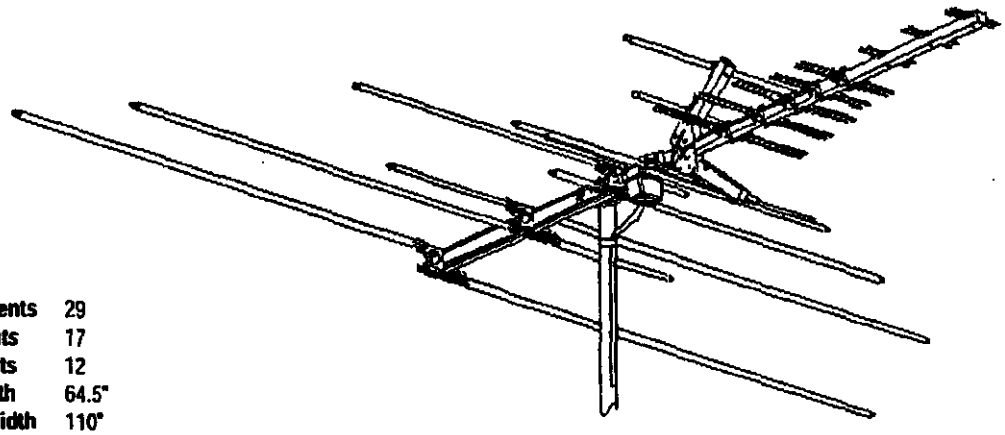

Active Elements	29
UHF Elements	17
VHF Elements	12
Boom Length	64.5"
Maximum Width	110"
Vertical Height	13.6"
Element Diameter	3/8"

Shpg. Weight	7 lbs.
Carton Dimensions	6.25"x6.25"x77"

"UPS in shield design is a registered trademark of United Parcel Service of America, Inc. used by permission."

Output Impedance:	75 ohm
Recommended Preamp:	AP Series

Made in U.S.A.

GAIN	CH.2	CH.4	CH.6	CH.7	CH.9	CH.11	CH.13	CH.14	CH.32	CH.50	CH.69
dB over reference dipole	3.5	3.4	1.6	8.3	9.6	8	9.9	11.5	10.4	10.7	9.7
beamwidth at half power points	70°	73°	70°	37°	38°	39°	37°	61°	54°	46°	34°
front-to-back ratio	10.5dB	7dB	7.5dB	13dB	16dB	15dB	16dB	16dB	greater than 20dB	19dB	18dB

POLAR PATTERNS

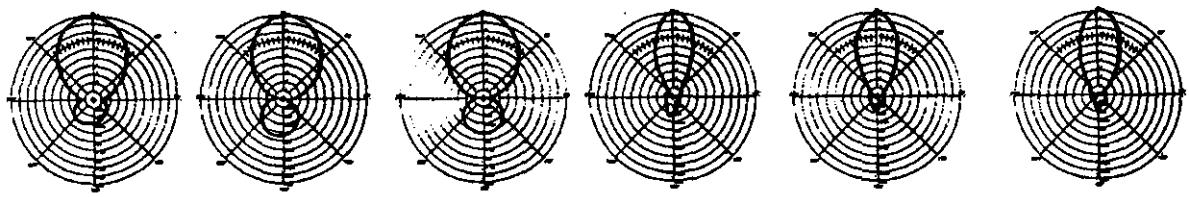

CH.2 CH. 4 CH.6 CH.7 CH.9 CH.11

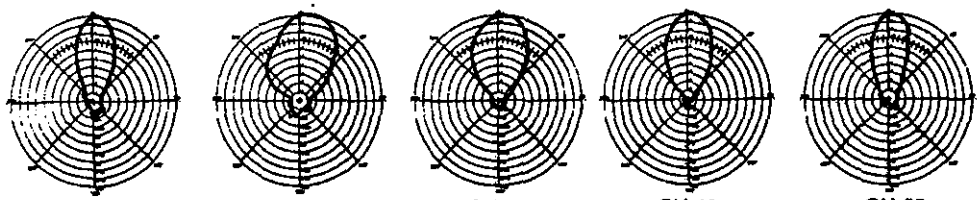

CH.13 CH.14 CH.32 CH.50 CH.69

Printed in U.S.A. Winegard Company, 3000 Kirkwood St., Burlington, IA 52601-2000 Rev. 4/02

WINEGARD®
Clearly the World's Best®

PLATINUM SERIES
HIGH DEFINITION VHF/UHF ANTENNA

engineering specifications

Model HD7080P

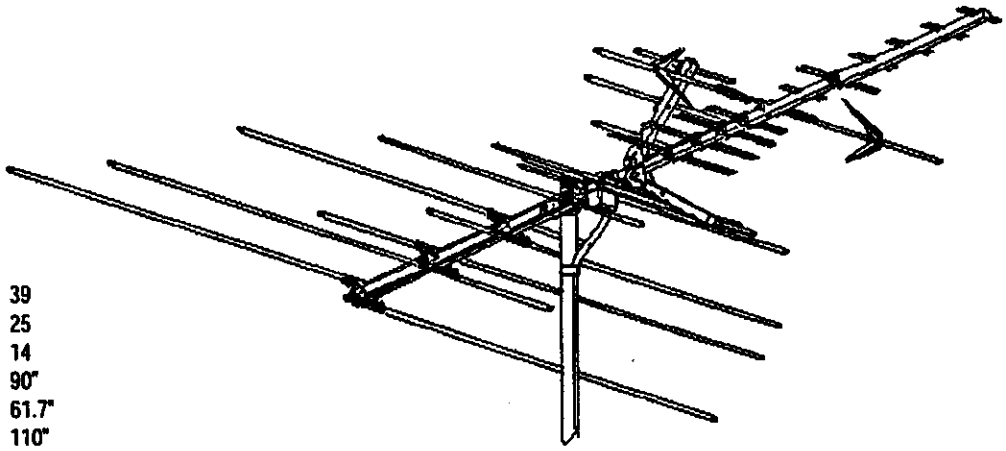

Active Elements	39		
UHF Elements	25		
VHF Elements	14		
Boom Length	90"		
Turning Radius	61.7"		
Maximum Width	110"		
Vertical Height	19.3"	**Shpg. Weight**	9.5 lbs.
Element Diameter	3/8"	**Carton Dimensions**	6.25"x6.25"x101"

Output Impedance: 75 ohm
Recommended Preamp: AP Series

"UPS In shield design is a registered trademark of United Parcel Service of America, Inc. used by permission."

Made in U.S.A.

GAIN	CH.2	CH.4	CH.6	CH.7	CH.9	CH.11	CH.13	CH.14	CH.32	CH.50	CH.69
dB over reference dipole	5.1	5	2.8	7.6	9.5	9.2	11	11.7	11.4	11	10.2
beamwidth at half power points	75°	77°	77°	36°	42°	45°	39°	45°	46°	41°	35°
front-to-back ratio	13dB	13dB	11dB	15dB	19dB	greater than 20dB	greater than 18dB	13dB	greater than 20dB	20dB	14dB

POLAR PATTERNS

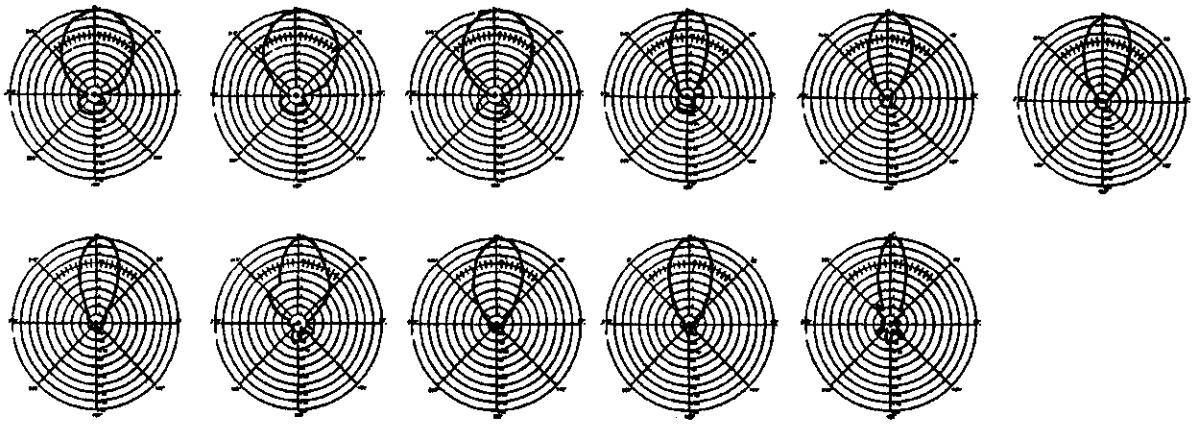

Printed in U.S.A. Winegard Company, 3000 Kirkwood St., Burlington, IA 52601-2000 Rev. 4/02

WINEGARD®
Clearly the World's Best®

PLATINUM SERIES
HIGH DEFINITION VHF/UHF ANTENNA

engineering specifications

Model HD7082P

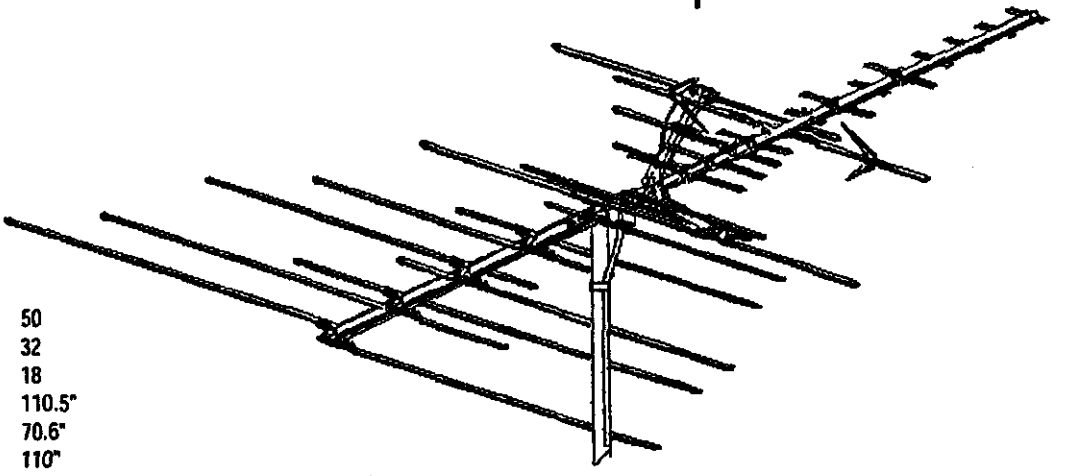

Active Elements	50		
UHF Elements	32		
VHF Elements	18		
Boom Length	110.5"		
Turning Radius	70.6"		
Maximum Width	110"		
Vertical Height	19.3"	**Shpg. Weight**	10.8 lbs.
Element Diameter	3/8"	**Carton Dimensions**	6.25"x6.25"x89"

Output Impedance: 75 ohm
Recommended Preamp: AP Series

"UPS in shield design is a registered trademark of United Parcel Service of America, Inc. used by permission."

Made in U.S.A.

GAIN	CH.2	CH.4	CH.6	CH.7	CH.9	CH.11	CH.13	CH.14	CH.32	CH.50	CH.69
dB over reference dipole	6.4	6.4	6.2	10	10.9	10.2	10	13	12.2	10.8	12.2
beamwidth at half power points	76°	71°	73°	35°	40°	44°	51°	31°	40°	39°	21°
front-to-back ratio	15dB	20dB	19dB	13dB	20dB	20dB	greater than 20dB	10.5dB	greater than 20dB	20dB	16dB

POLAR PATTERNS

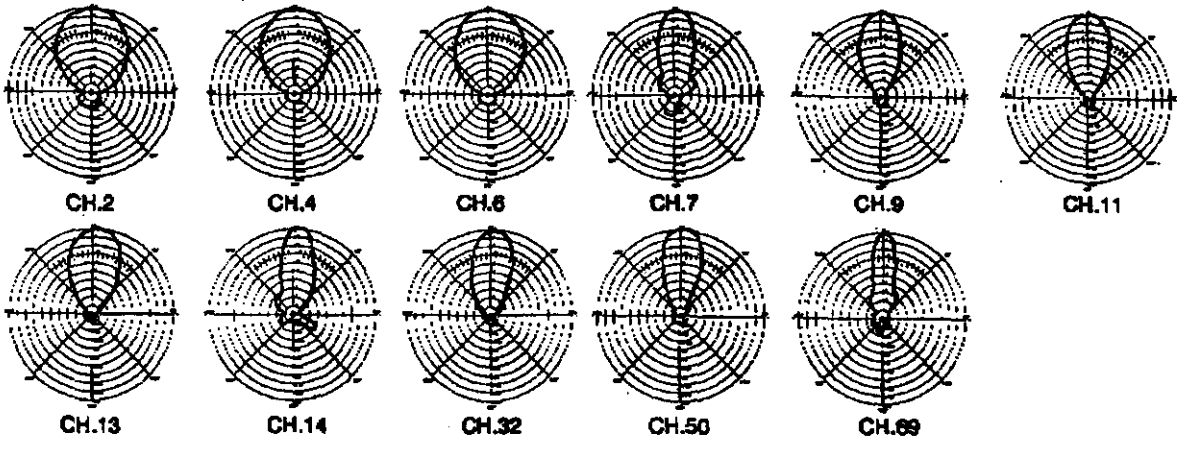

Printed in U.S.A. Winegard Company, 3000 Kirkwood St., Burlington, IA 52601-2000 Rev. 4/02

WINEGARD®
Clearly the World's Best®

PLATINUM SERIES
HIGH DEFINITION VHF/UHF ANTENNA

engineering specifications

Model HD7084P

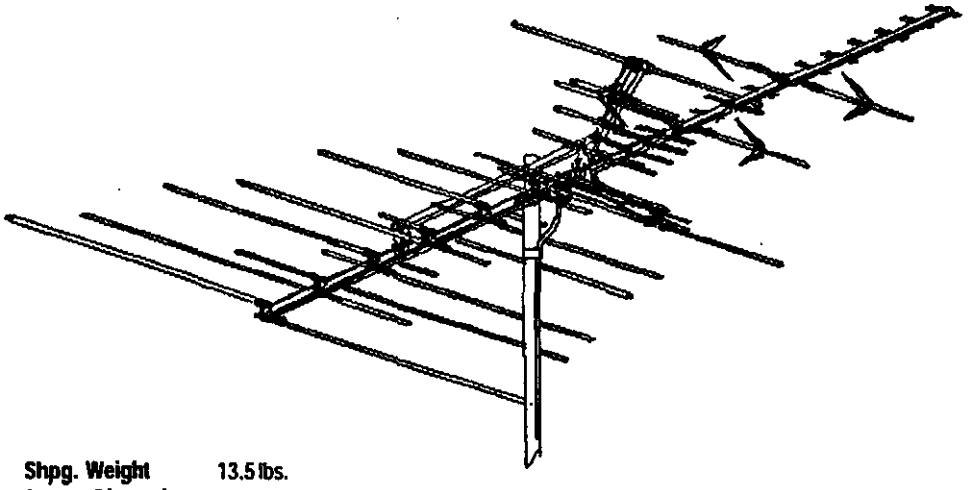

Active Elements	68		
UHF Elements	40		
VHF Elements	28		
Boom Length	131"		
Turning Radius	81"		
Maximum Width	110"		
Vertical Height	25.5"	**Shpg. Weight**	13.5 lbs.
Element Diameter	3/8"	**Carton Dimensions**	6.25"x6.25"x104.25"

Output Impedance: 75 ohm
Recommended Preamp: AP Series

"UPS in shield design is a registered trademark of United Parcel Service of America, Inc. used by permission."

Made in U.S.A.

GAIN	CH.2	CH.4	CH.6	CH.7	CH.9	CH.11	CH.13	CH.14	CH.32	CH.50	CH.69
dB over reference dipole	6.2	7.2	7.6	10.9	12	10.9	10.8	14.6	12.1	11.8	10.2
beamwidth at half power points	69°	68°	68°	31°	33°	46°	34°	42°	41°	36°	22°
front-to-back ratio	20dB	greater than 20dB	greater than 20dB	19dB	17dB	15dB	17dB	11dB	20dB	20dB	12dB

POLAR PATTERNS

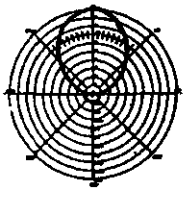
CH.2

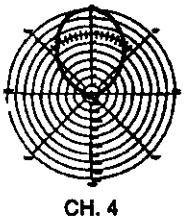
CH. 4

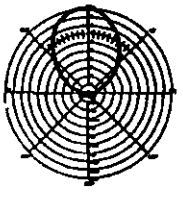
CH.6

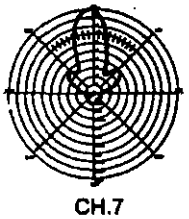
CH.7

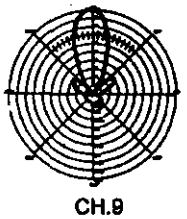
CH.9

CH.11

CH.13

CH.14

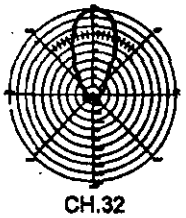
CH.32

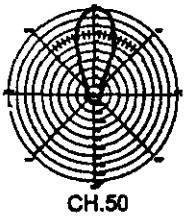
CH.50

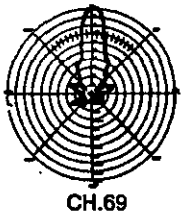
CH.69

Printed in U.S.A. Winegard Company, 3000 Kirkwood St., Burlington, IA 52601-2000 Rev. 4-02

WINEGARD®
Clearly the World's Best®

PLATINUM SERIES
HIGH DEFINITION VHF/UHF ANTENNA

engineering specifications

Model HD8200P

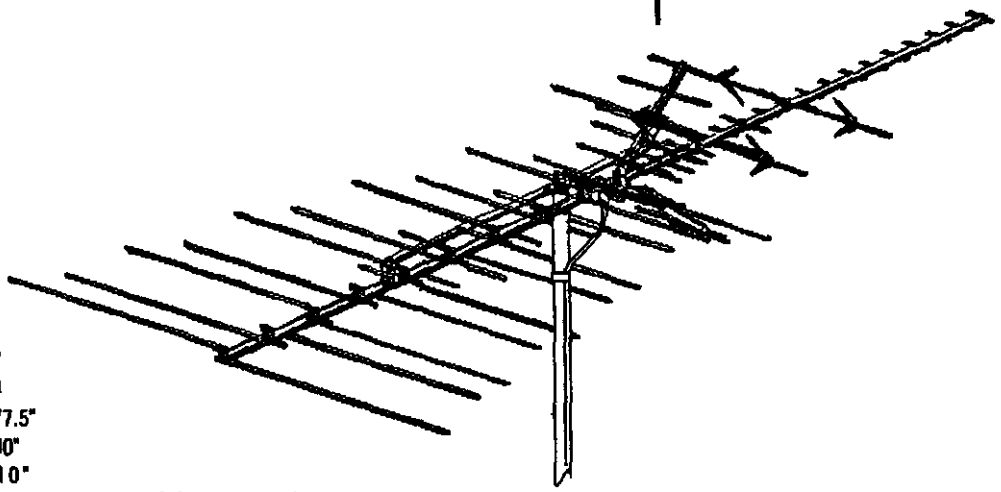

Active Elements	71		
UHF Elements	37		
VHF Elements	34		
Boom Length	177.5"		
Turning Radius	100"		
Maximum Width	110"		
Vertical Height	31.5"	**Shpg. Weight**	17 lbs.
Element Diameter	3/8"	**Carton Dimensions**	6.25"x6.25"x122"

Output Impedance: 75 ohm
Recommended Preamp: AP Series

Made in U.S.A.

GAIN	CH.2	CH.4	CH.6	CH.7	CH.9	CH.11	CH.13	CH.14	CH.32	CH.50	CH.69
dB over reference dipole	7	7.7	6.4	10.4	12.6	11	12	14.2	13.7	12.2	13
beamwidth at half power points	68°	68°	66°	29°	34°	42°	41°	40°	41°	33°	23°
front-to-back ratio	greater than 20dB	greater than 20dB	greater than 20dB	greater than 20dB	greater than 20dB	19dB	18dB	13dB	20dB	greater than 20dB	10.5dB

POLAR PATTERNS

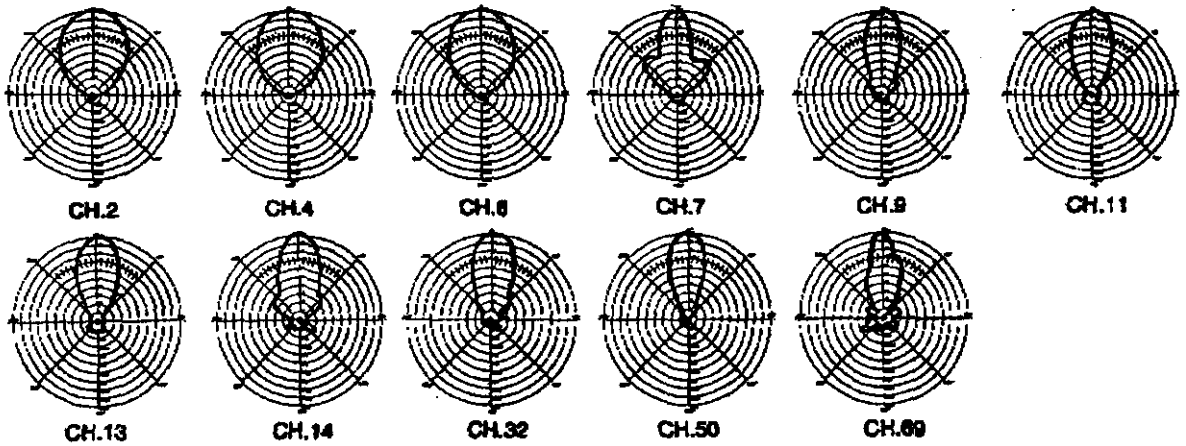

Printed in U.S.A. Winegard Company, 3000 Kirkwood St., Burlington, IA 52601-2000 Rev. 4/02

WINEGARD®
Clearly the World's Best®

PLATINUM SERIES
HIGH DEFINITION UHF ANTENNA

engineering specifications

Model HD9065P

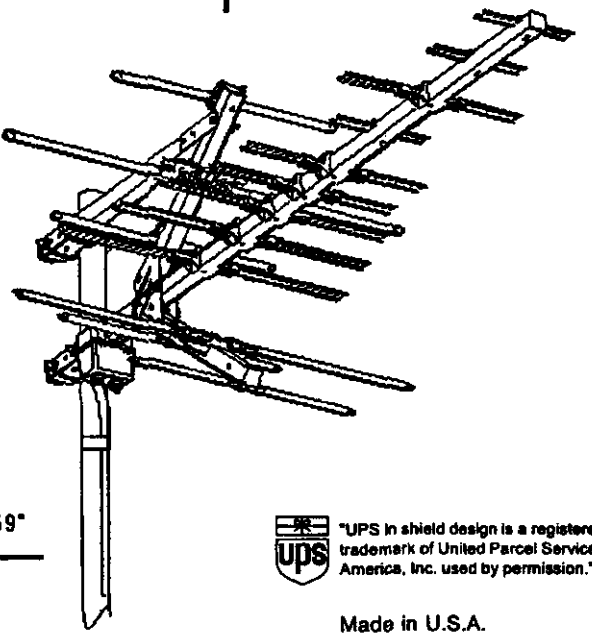

Active Elements	23		
Boom Length	50"		
Turning Radius	47.7"		
Maximum Width	27"		
Vertical Height	19"	**Shpg. Weight**	6 lbs.
Element Diameter	3/8"	**Carton Dimensions**	6.25"x6.25"x59"

Output Impedance: 75 ohm
Recommended Preamp: AP Series

"UPS in shield design is a registered trademark of United Parcel Service of America, Inc. used by permission."

Made in U.S.A.

CHANNEL	CH.14	CH.32	CH.50	CH.69
dB gain over reference dipole	11.9	12.1	11.6	10.6
beamwidth at half power points	52°	53°	40°	31°
front-to-back ratio	14dB	19dB	14dB	17dB

POLAR PATTERNS

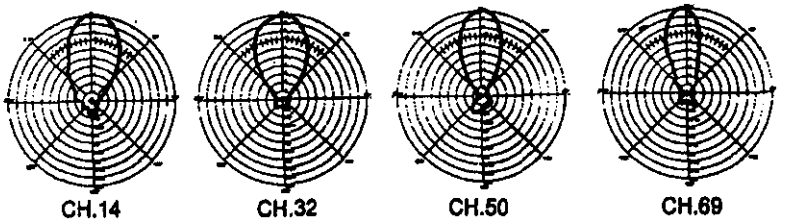

CH.14 CH.32 CH.50 CH.69

Printed in U.S.A. Winegard Company, 3000 Kirkwood St., Burlington, IA 52601-2000 Rev. 2/02

WINEGARD®
Clearly the World's Best®

PLATINUM SERIES
HIGH DEFINITION UHF ANTENNA

engineering specifications

Model HD9085P

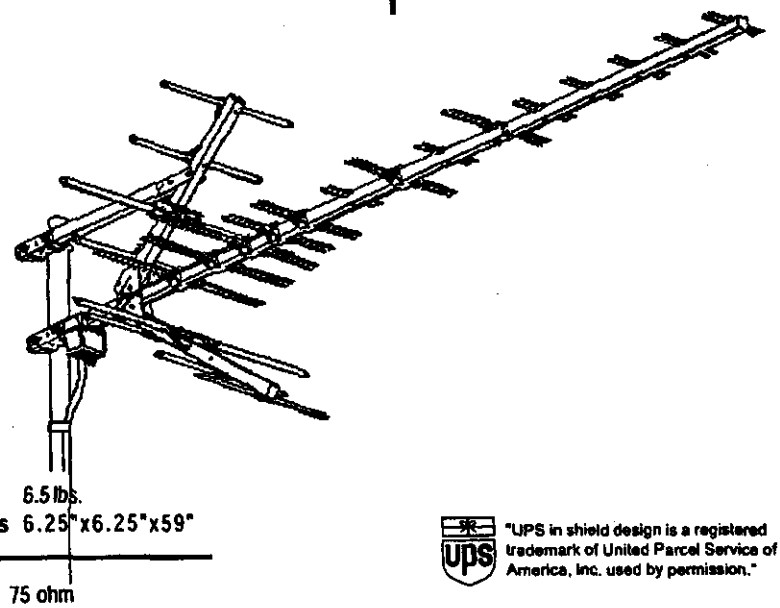

Active Elements	31		
Boom Length	75"		
Turning Radius	72.75"		
Maximum Width	27"		
Vertical Height	25.5"	**Shpg. Weight**	6.5 lbs.
Element Diameter	3/8"	**Carton Dimensions**	6.25"x6.25"x59"

Output Impedance: 75 ohm
Recommended Preamp: AP Series

"UPS in shield design is a registered trademark of United Parcel Service of America, Inc. used by permission."

Made in U.S.A.

CHANNEL	CH.14	CH.32	CH.50	CH.69
dB gain over *reference* dipole	11.9	14.6	14.5	12.8
beamwidth at half power points	45°	44°	32°	23°
front-to-back ratio	14dB	18dB	12dB	9dB

POLAR PATTERNS

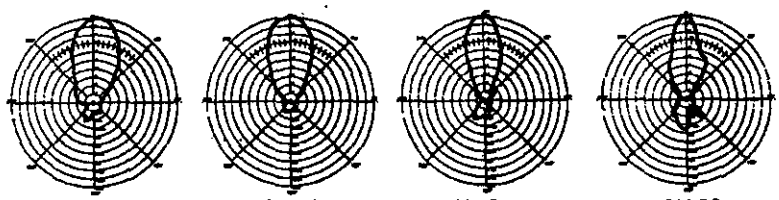

CH.14 CH.32 CH.50 CH.69

Printed in U.S.A. Winegard Company, 3000 Kirkwood St., Burlington, IA 52601-2000 Rev. 2/02

WINEGARD®
Clearly the World's Best®

PLATINUM SERIES
HIGH DEFINITION UHF ANTENNA

engineering specifications

Model HD9095P

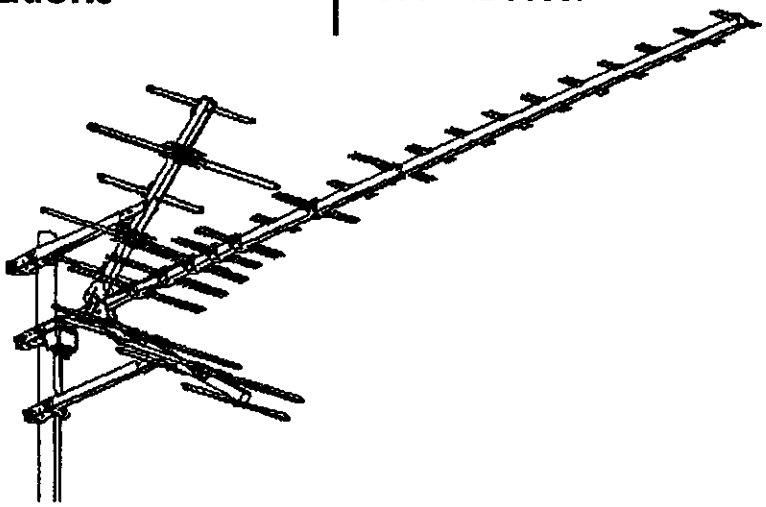

Active Elements	39		
Boom Length	95"		
Turning Radius	92.75"		
Maximum Width	27"		
Vertical Height	31.75"	**Shpg. Weight**	8 lbs.
Element Diameter	3/8"	**Carton Dimensions**	6.25"x6.25"x59"

Output Impedance: 75 ohm
Recommended Preamp: AP Series

"UPS in shield design is a registered trademark of United Parcel Service of America, Inc. used by permission."

Made in U.S.A.

CHANNEL	CH.14	CH.32	CH.50	CH.69
dB gain over reference dipole	14.2	16	15.5	12.2
beamwidth at half power points	43°	41°	30°	34°
front-to-back ratio	11dB	14dB	11dB	8dB

POLAR PATTERNS

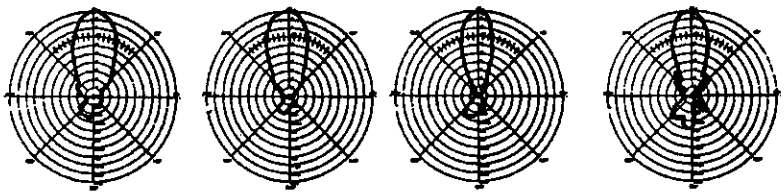

CH.14 CH.32 CH.50 CH.69

Printed in U.S.A. Winegard Company, 3000 Kirkwood St., Burlington, IA 52601-2000 Rev. 2/02

WINEGARD®
Clearly the World's Best®

PROSTAR® 1000 UHF ANTENNA

engineering specifications

Model PR-9012

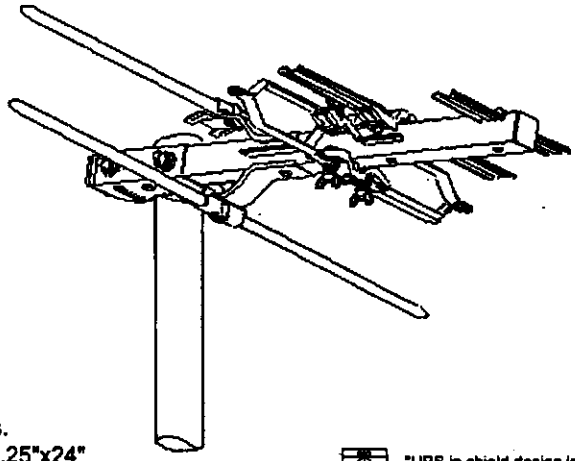

Active Elements	5		
Boom Length	17"		
Turning Radius	15.5"		
Maximum Width	22"		
Vertical Height	4"	**Shpg. Weight**	2 lbs.
Element Diameter	3/8"	**Carton Dimensions**	4"x6.25"x24"

"UPS in shield design is a registered trademark of United Parcel Service of America, Inc. used by permission."

Output Impedance: 300 ohm / 75 ohm with included matching transformer
Recommended Preamp: AP Series

CHANNEL	CH.14	CH.20	CH.26	CH.32	CH.38	CH.44	CH.50	CH.56	CH.62	CH.69
dB gain over reference dipole	3.3	3.9	4.0	5.0	6.4	6.2	6.0	6.2	6.4	6.2
beamwidth at half power points	71°	68°	63°	73°	59°	57°	58°	60°	45°	58°
front-to-back ratio	12dB	5dB	11dB	9dB	10.5dB	10dB	9dB	35dB	9dB	3.5dB

POLAR PATTERNS

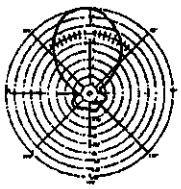
CH.14

CH. 20

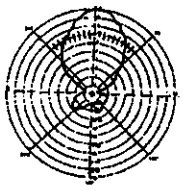
CH.26

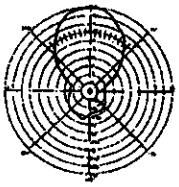
CH.32

CH.38

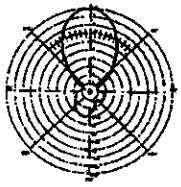
CH.44

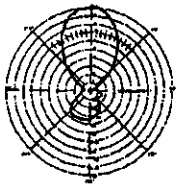
CH.50

CH.56

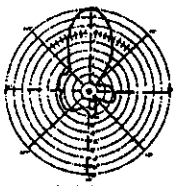
CH.62

CH.69

Printed in U.S.A. Winegard Company, 3000 Kirkwood St., Burlington, IA 52601-2000 Rev. 1/02

WINEGARD®
Clearly the World's Best®

PROSTAR® 1000 UHF ANTENNA

engineering specifications

Model PR-9014

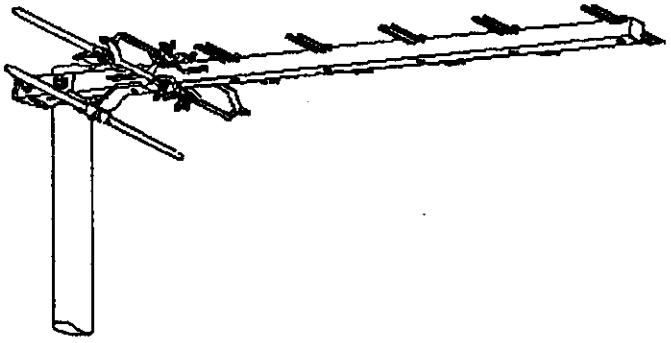

Active Elements	8		
Boom Length	39.875"		
Turning Radius	38"		
Maximum Width	15"		
Vertical Height	4"	**Shpg. Weight**	7.5 lbs.
Element Diameter	3/8"	**Carton Dimensions**	4"x6.25"x43"

"UPS in shield design is a registered trademark of United Parcel Service of America, Inc. used by permission."

Output Impedance: 300 ohm / 75 ohm with included transformer
Recommended Preamp: AP Series

Made in U.S.A.

CHANNEL	CH.14	CH.32	CH.50	CH.69
dB gain over reference dipole	8.3dB	7.2dB	8.6dB	6.4dB
beamwidth at half power points	65°	62°	50°	35°
front-to-back ratio	15dB	12dB	17dB	14dB

POLAR PATTERNS

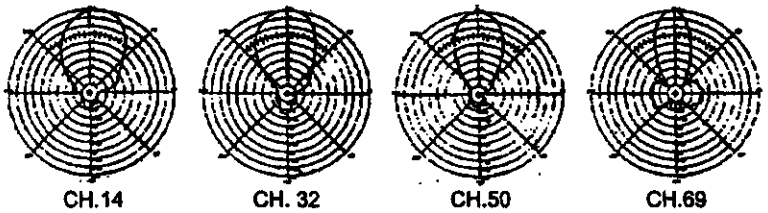

CH.14 CH. 32 CH.50 CH.69

Printed in U.S.A. Winegard Company, 3000 Kirkwood St., Burlington, IA 52601-2000

WINEGARD®
Clearly the World's Best®

PROSTAR® 1000 UHF ANTENNA

engineering specifications

Model PR-9016

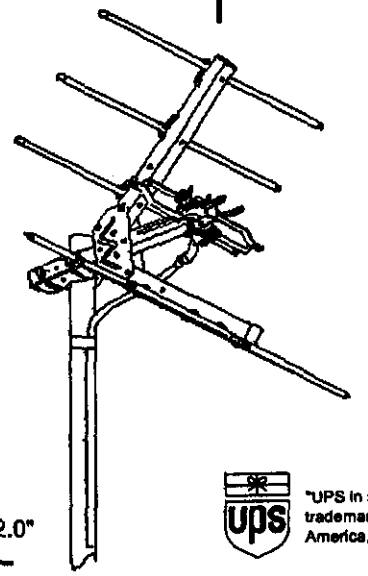

Active Elements	7		
Boom Length	15.75"		
Turning Radius	17.75"		
Maximum Width	22"		
Vertical Height	19"	**Shpg. Weight**	3.0 lbs.
Element Diameter	3/8"	**Carton Dimensions**	6.25"x4.25"x32.0"

"UPS in shield design is a registered trademark of United Parcel Service of America, Inc. used by permission."

Output Impedance: 300 ohm / 75 ohm with included transformer
Recommended Preamp: AP Series

Made in U.S.A.

GAIN	CH.14	CH.26	CH.38	CH.50	CH.62	CH.69
dB over reference dipole	5.8dB	6.5dB	7.5dB	8.0dB	8.0dB	7.7dB
beamwidth at half power points	59°	60°	54°	47°	39°	32°
front-to-back ratio	6dB	12dB	14dB	10.5dB	12.5dB	5.5dB

POLAR PATTERNS

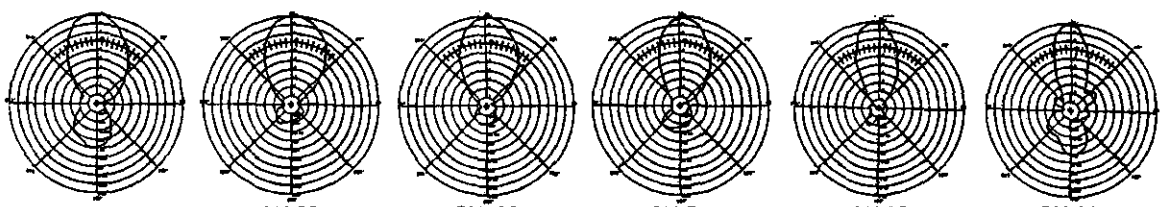

CH.14 CH.26 CH. 38 CH.50 CH.62 CH.69

Printed in U.S.A. Winegard Company, 3000 Kirkwood St., Burlington, IA 52601-2000 Rev. 1/02

WINEGARD®
Clearly the World's Best®

PROSTAR® 1000 UHF ANTENNA

engineering specifications

Model PR-9018

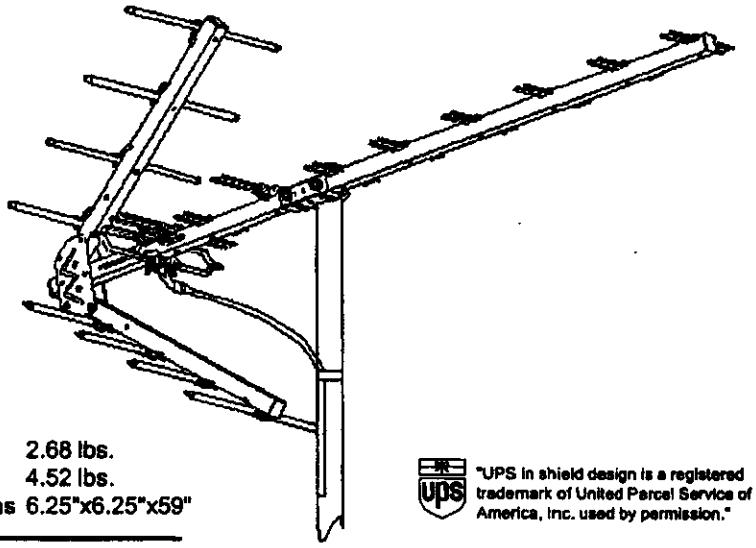

Active Elements	20		
Boom Length	49.875"		
Turning Radius	30"		
Maximum Width	15"	**Net Weight**	2.68 lbs.
Vertical Height	25.5"	**Shpg. Weight**	4.52 lbs.
Element Diameter	3/8"	**Carton Dimensions**	6.25"x6.25"x59"

"UPS in shield design is a registered trademark of United Parcel Service of America, Inc. used by permission."

Output Impedance: 300 ohm / 75 ohm with included transformer

Recommended Preamp: AP Series

Made in U.S.A.

CHANNEL	CH.14	CH.32	CH.50	CH.69
dB gain over reference dipole	13.3	14.5	12.6	9
beamwidth at half power points	60°	55°	40°	26°
front-to-back ratio	13.5dB	14dB	19.5dB	6dB

POLAR PATTERNS

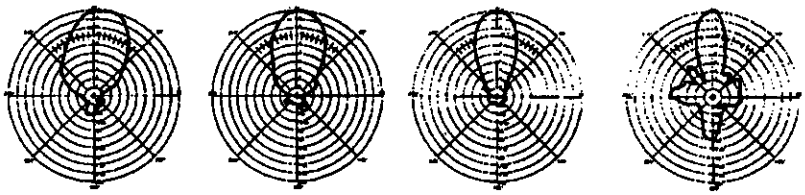

CH.14 CH. 32 CH.50 CH.69

Printed in U.S.A. Winegard Company, 3000 Kirkwood St., Burlington, IA 52601-2000 Rev. 8/01

WINEGARD®
Clearly the World's Best®

PROSTAR® 1000 UHF ANTENNA

engineering specifications

Model PR-9022

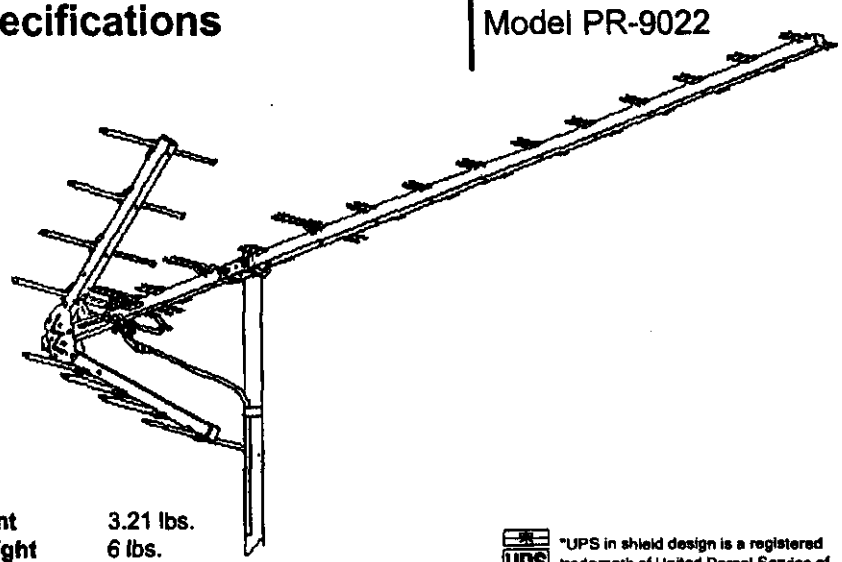

Active Elements	26		
Boom Length	78.5"		
Turning Radius	58.5"		
Maximum Width	15"	**Net. Weight**	3.21 lbs.
Vertical Height	25.5"	**Shpg. Weight**	6 lbs.
Element Diameter	3/8"	**Carton Dimensions**	6.25"x6.25"x89"

"UPS in shield design is a registered trademark of United Parcel Service of America, Inc. used by permission."

Output Impedance: 300 ohm / 75 ohm with included transformer

Recommended Preamp: AP Series

Made in U.S.A.

CHANNEL	CH.14	CH.32	CH.50	CH.69
dB gain over reference dipole	14.3	15.2	14.6	9.9
beamwidth at half power points	54°	43°	34°	23°
front-to-back ratio	13.5dB	16dB	18dB	13dB

POLAR PATTERNS

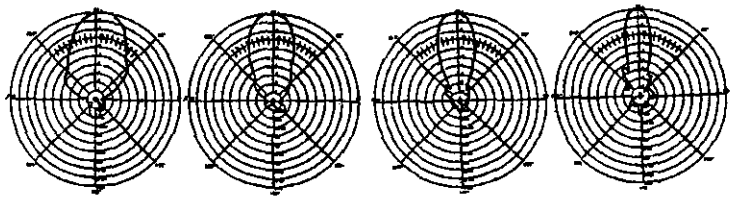

CH.14 CH. 32 CH.50 CH.69

Printed in U.S.A. Winegard Company, 3000 Kirkwood St., Burlington, IA 52601-2000 Rev. 6/01

WINEGARD®
Clearly the World's Best®

PROSTAR® 1000 UHF ANTENNA

engineering specifications

Model PR-9032

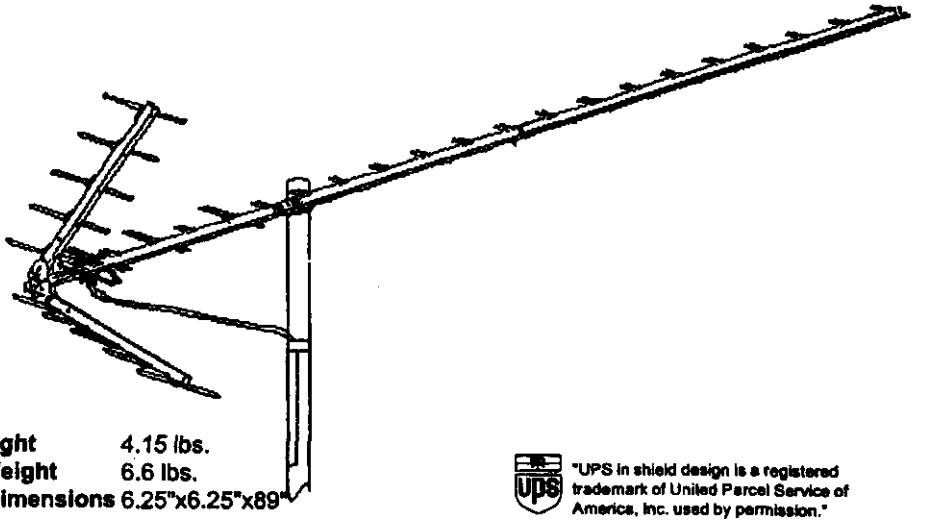

Active Elements	35		
Boom Length	114.5"		
Turning Radius	79.75"		
Maximum Width	15"	**Net. Weight**	4.15 lbs.
Vertical Height	31.5"	**Shpg. Weight**	6.6 lbs.
Element Diameter	3/8"	**Carton Dimensions**	6.25"x6.25"x89"

"UPS in shield design is a registered trademark of United Parcel Service of America, Inc. used by permission."

Output Impedance: 300 ohm / 75 ohm with included transformer

Recommended Preamp: AP Series

Made in U.S.A.

CHANNEL	CH.14	CH.32	CH.50	CH.69
dB gain over reference dipole	14.9	16.3	15.7	11.5
beamwidth at half power points	53°	37°	28°	26°
front-to-back ratio	14dB	20dB	20dB	7.5dB

POLAR PATTERNS

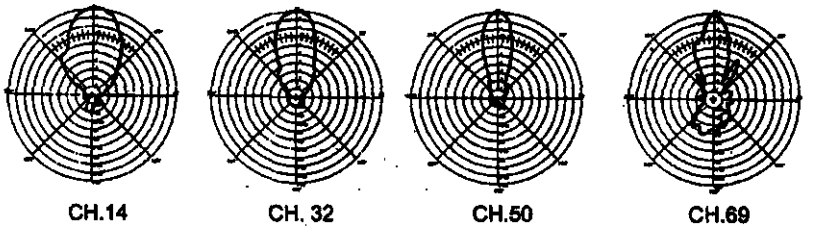

CH.14 CH. 32 CH.50 CH.69

Printed in U.S.A. Winegard Company, 3000 Kirkwood St., Burlington, IA 52601-2000 Rev. 6/01

WINEGARD®
Clearly the World's Best®

PROSTAR® UHF ANTENNA

engineering specifications

Model PR-4400

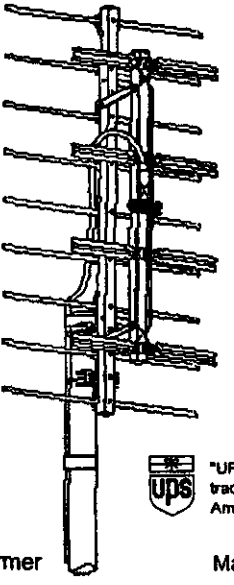

Active Elements	13		
Turning Radius	11.25"		
Maximum Width	22"		
Vertical Height	34"	**Shpg. Weight**	4.64 lbs.
Element Diameter	3/8"	**Carton Dimensions**	6.5"x6.5"x59"

"UPS in shield design is a registered trademark of United Parcel Service of America, Inc. used by permission."

Output Impedance: 300 ohm / 75 ohm with included transformer

Recommended Preamp: AP Series

Made in U.S.A.

GAIN	CH.14	CH.32	CH.50	CH.69
dB over reference dipole	9dB	10dB	10.6dB	11.6dB
beamwidth at half power points	72°	60°	46°	47°
front-to-back ratio	-17dB	-14dB	-13dB	-9dB

POLAR PATTERNS

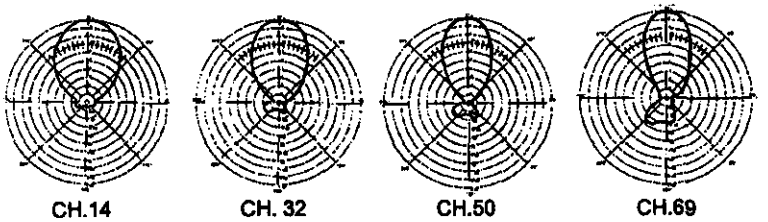

CH.14 CH. 32 CH.50 CH.69

Printed in U.S.A. Winegard Company, 3000 Kirkwood St., Burlington, IA 52601-2000

WINEGARD®
Clearly the World's Best®

PROSTAR® 1000 UHF ANTENNA

engineering specifications

Model PR-8800

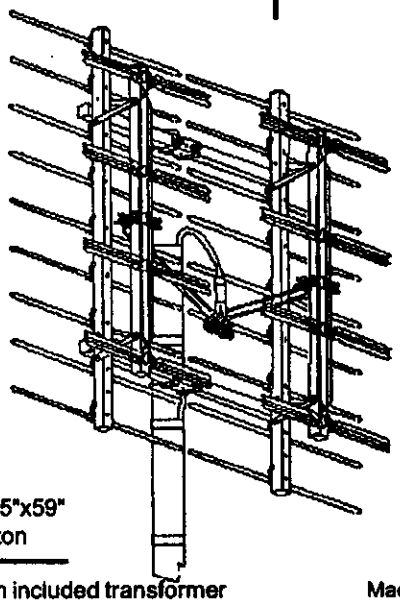

Active Elements	26		
Turning Radius	23"		
Maximum Width	45"	**Shpg. Weight**	8 lbs.
Vertical Height	34"	**Carton Dimensions**	6.25"x6.25"x59"
Element Diameter	3/8"		1 per Carton

"UPS in shield design is a registered trademark of United Parcel Service of America, Inc. used by permission."

Output Impedance: 300 ohm / 75 ohm with included transformer

Recommended Preamp: AP Series

Made in U.S.A.

GAIN	CH.14	CH.32	CH.50	CH.69
dB over reference dipole	10.7dB	12.0dB	11.0dB	12.5dB
beamwidth at half power points	32°	23°	20°	17°
front-to-back ratio	-9dB	-17dB	-11dB	-9dB

POLAR PATTERNS

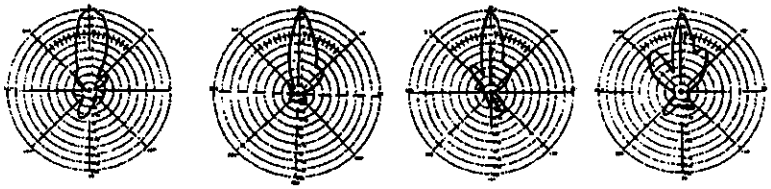

CH.14 CH. 32 CH.50 CH.69

Printed in U.S.A. Winegard Company, 3000 Kirkwood St., Burlington, IA 52601-2000

WINEGARD®
Clearly the World's Best®

PROSTAR® 1000 VHF/UHF/FM ANTENNA

engineering specifications

Model PR-5646

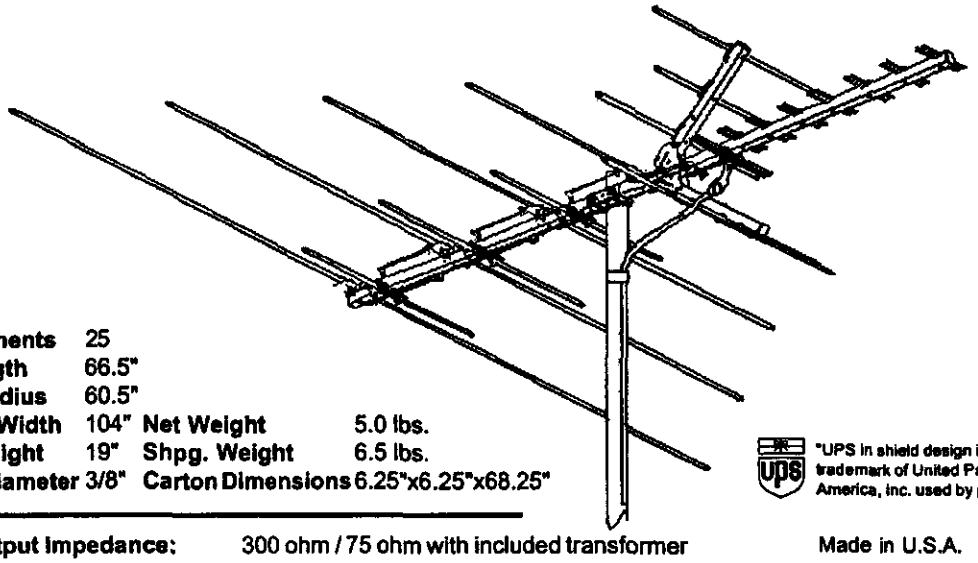

Active Elements	25		
Boom Length	66.5"		
Turning Radius	60.5"		
Maximum Width	104"	**Net Weight**	5.0 lbs.
Vertical Height	19"	**Shpg. Weight**	6.5 lbs.
Element Diameter	3/8"	**Carton Dimensions**	6.25"x6.25"x68.25"

"UPS In shield design is a registered trademark of United Parcel Service of America, inc. used by permission."

Output Impedance: 300 ohm / 75 ohm with included transformer

Recommended Preamp: AP Series

Made in U.S.A.

CHANNEL	CH.2	CH.4	CH.6	CH.7	CH.9	CH.11	CH.13	CH.14	CH.32	CH.50	CH.69
dB gain over reference dipole	3.0	3.5	2.2	7.1	7.4	7.7	7.2	9.0	9.4	9.4	7.8
beamwidth at half power points	77°	76°	74°	36°	39°	40°	40°	52°	50°	46°	31°
front-to-back ratio	3.5dB	7dB	9dB	9dB	7dB	8.5dB	13dB	8dB	19dB	17dB	11dB

POLAR PATTERNS

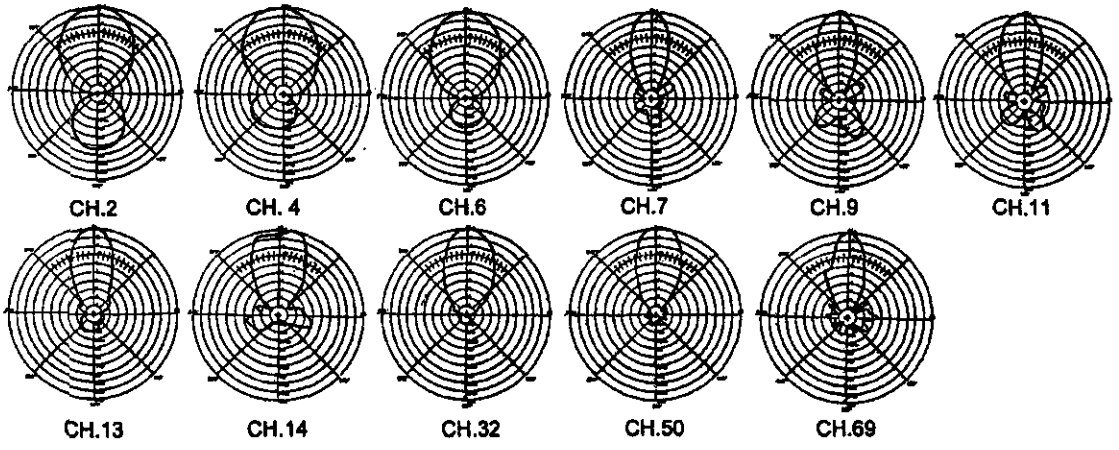

Printed in U.S.A. Winegard Company, 3000 Kirkwood St., Burlington, IA 52601-2000 Rev. 1/02

WINEGARD®
Clearly the World's Best®

PROSTAR® 1000 VHF/UHF/FM ANTENNA

engineering specifications

Model PR-7000

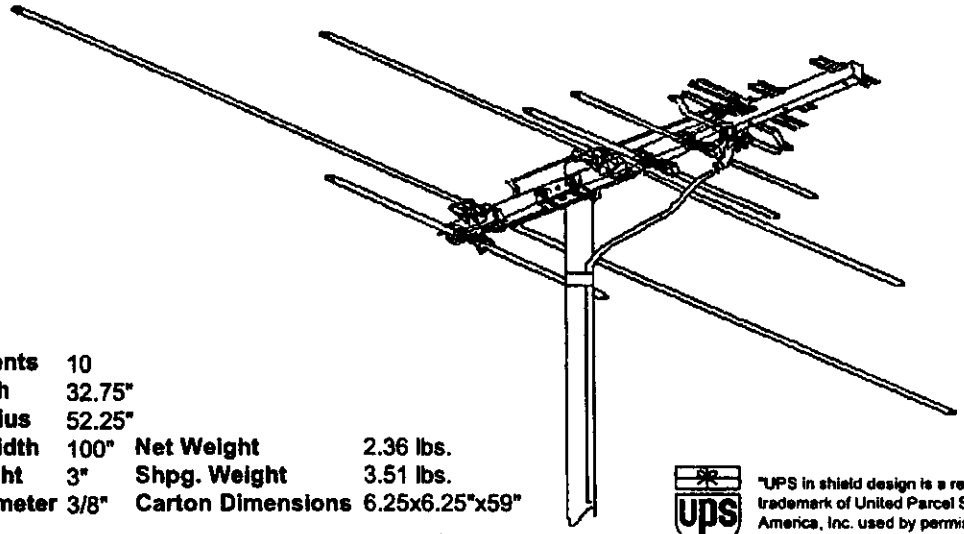

Active Elements	10		
Boom Length	32.75"		
Turning Radius	52.25"		
Maximum Width	100"	**Net Weight**	2.36 lbs.
Vertical Height	3"	**Shpg. Weight**	3.51 lbs.
Element Diameter	3/8"	**Carton Dimensions**	6.25x6.25"x59"

"UPS in shield design is a registered trademark of United Parcel Service of America, Inc. used by permission."

Output Impedance: 300 ohm / 75 ohm with included transformer
Recommended Preamp: AP Series

Made in U.S.A.

CHANNEL	CH.2	CH.4	CH.6	CH.7	CH.9	CH.11	CH.13	CH.14	CH.32	CH.50	CH.69
dB gain over reference dipole	.2	1.8	.5	5	5	5.3	4.1	3.6	5.1	6	6
beamwidth at half power points	83°	82°	78°	51°	66°	48°	33°	75°	54°	40°	43°
front-to-back ratio	1dB	1.5dB	3dB	8.5dB	12dB	12.5dB	4.5dB	7dB	10.5dB	14dB	11dB

POLAR PATTERNS

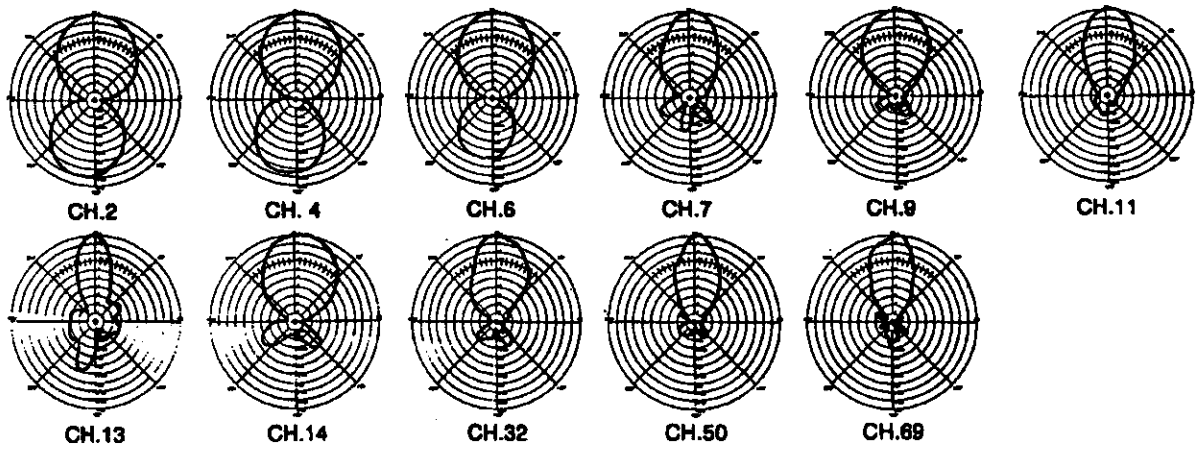

Printed in U.S.A. Winegard Company, 3000 Kirkwood St., Burlington, IA 52601-2000 Rev. 6/01