UNITED STATES DISTRICT COURT
DISTRICT OF NEBRASKA

FILED
U.S. DISTRICT COURT
DISTRICT OF NEBRASKA

2006 JAN 17 PM 3:54

OFFICE OF THE CLERK

SPRINT COMMUNICATIONS COMPANY L.P.,

Plaintiff,

v.

NEBRASKA PUBLIC SERVICE etc.; et al.,

Defendants.

No.: 4:05 CV 03260-TDT

STIPULATED RECORD ON APPEAL

VOLUME I

4:05cv3260-A45A

45

UNITED STATES DISTRICT COURT
DISTRICT OF NEBRASKA

SPRINT COMMUNICATIONS COMPANY L.P., Plaintiff, v. NEBRASKA PUBLIC SERVICE, etc.; et al., Defendants.	No: 4:05 CV 03260 **STIPULATION DESIGNATING RECORD ON APPEAL**

Plaintiff and Defendants, by and through their respective counsel, hereby stipulate and agree that the Record on Appeal in this proceeding shall contain the following documents:

Volume 1

Tab No.	Date Filed	Document Filed	Bates Range
1	5/23/05	Petition for Arbitration of Sprint Communications Company L.P., C-3429	0001 – 0034
2	5/26/05	NPSC's Letter of Notification to Sprint (acknowledging receipt of Petition for Arbitration, setting due dates, etc.), C-3429	0035
3	5/31/05	[SENTCO's] Motion for Commission to Act as Arbitrator, C-3429	0036 – 0038
4	6/1/05	Order Setting Oral Argument (Opinion and Findings; Order), C-3429	0039 - 0040
5	6/6/05	Sprint's Response to SENTCO's Motion for Commission to Act as Arbitrator, C-3429	0041 – 0043
6	6/14/05	Motion Granted (Opinion and Findings; Order), C-3429; 6/15/05 Certification of Order	0044 – 0046
7	6/15/05	Order Setting Prehearing Conference, C-3429; Certification of Order	0047 – 0048
8	6/17/05	Motion to Dismiss or, in the Alternative, Response of Southeast Nebraska Telephone Company to Petition for Arbitration, C-3429	0049 – 0098
9	7/12/05	Protective Order, C-3429; 7/15/05 Amended Certification of Order	0099 – 0109
10	7/25/05	Southeast Nebraska Telephone Company's Exhibit Designations, C-3429	0110 – 0112

Tab No.	Date Filed	Document Filed	Bates Range
11	7/27/05	Direct Testimony of James R. Burt, C-3429	0113 – 0149
12	7/29/05	Sprint Communications Company L.P.'s Motion in Limine and Request to Exclude Discovery and Documents Identified by Southeast Nebraska Telephone Company, C-3429	0150 - 0179
13	8/3/05	Pre-Filed Rebuttal Testimony of Steven E. Watkins, C-3429	0180 – 0226
14	8/5/05	Response of Southeast Nebraska Telephone Company to Sprint Communications Company L.P. Motion in Limine	0227 – 0243
15	8/5/05	Rebuttal Testimony of James R. Burt, C-3429	0244 – 0251
16	8/5/05	Hearing Officer Order (Opinion and Findings; Order), C-3429; 8/8/05 Certification of Order	0252 – 0254
17	8/9/05	Hearing Officer Order (Opinion and Findings; Order), C-3429; Certification of Order	0255 – 0256
18	8/9/05	Response of Southeast Nebraska Telephone Company to Sprint Communication L.P. Motion to Strike, C-3429	0257 – 0265
19	8/10/05	Sprint Communications Company L.P.'s Motion to Strike Rebuttal Testimony of Steven E. Watkins and Exhibits Thereto, C-3429	0266 – 0275
20	8/16/05	Transcript of Proceedings before the Nebraska Public Service Commission on 8/10/05, C-3429	0276 - 0432
21	8/16/05	Certification of Court Reporter (listing Exhibits made part of Transcript of Proceedings before the Nebraska Public Service Commission on 8/10/05, C-3429)	0433
22	8/16/05	8/10/05 Hearing Exhibit PSC 1 (*The Daily Record*, 5/27/05, p.8: New Public Notices NPSC, including C-3429)	0434
23	8/16/05	8/10/05 Hearing Exhibit PSC 2 (6/29/05 Certification of 6/28/05 Order, C-3429, with attached Order)	0435 – 0439
24	8/16/05	8/10/05 Hearing Exhibit Sprint 102 (7/25/05, Direct Testimony of James R. Burt, C-3429)	0440 – 0471
25	8/16/05	8/10/05 Hearing Exhibit Sprint 103 (8/3/05, Rebuttal Testimony of James R. Burt, C-3429)	0472 – 0479
26	8/16/05	8/10/05 Hearing Exhibit Sprint 104 (6/28/05, Planning Conference Order: Opinion and Findings; Order, C-3429)	0480 – 0483
27	8/16/05	8/10/05 Hearing Exhibit Sprint 105 (8/5/05, Hearing Officer Order: Opinion and Findings; Order, C-3429)	0484 – 0485

Tab No.	Date Filed	Document Filed	Bates Range
28	8/16/05	8/10/05 Hearing Exhibit Sprint 106 (not dated, Current Network Configuration Serving Subscribers in Lincoln, NE, Exhibit JRB-1)	0486 – 0487
29	8/16/05	8/10/05 Hearing Exhibit Sprint 107 (not dated, Network Configuration Envisioned to Serve Subscribers in Falls City, NE Compared to Existing Network in Lincoln, NE, Exhibit JRB-2)	0488
30	8/16/05	8/10/05 Hearing Exhibit Sprint 108 (Affidavit of Jeffrey Woosley)	0489
31	8/16/05	8/10/05 Hearing Exhibit SENTCO 1 (5/20/05, Petition for Arbitration of Sprint Communications Company L.P.; Exhibit 1: 12/22/04 letter from Paul M. Schudel, Woods & Aitken LLP, to Monica M. Barone, Esq. [Sprint, discussing steps to address before negotiation of an interconnection agreement]; Exhibit 2: [proposed] Interconnection and Reciprocal Compensation Agreement Between Southeast Nebraska Telephone Company and Sprint Communications, L.P.)	0490 – 0523
32	8/16/05	8/10/05 Hearing Exhibit SENTCO 2 (6/17/05, Motion to Dismiss Or, in the Alternative, Response of Southeast Nebraska Telephone Company to Petition for Arbitration, C-3429)	0524 – 0573
33	8/16/05	8/10/05 Hearing Exhibit SENTCO 3 (7/25/04, Pre-Filed Direct Testimony of Elizabeth A. Sickel with attached 7/25/04 Southeast Nebraska Telephone Company's Exhibit Designations, C-3429)	0574 – 0588
34	8/16/05	8/10/05 Hearing Exhibit SENTCO 4 (1/12/05 letter from Paul M. Schudel, Woods & Aiken LLP, to Monica M. Barone, Esq. [Sprint, detailing SENTCO's unanswered questions, attaching email and U.S. mail correspondence between Sprint and SENTCO, a copy of his 12/15/04 letter to the Commission re: C-3228, and suggesting a meeting between Sprint and SENTCO facilitated by representatives of the Commission and/or its Staff to discuss the nature of the interconnection arrangement Sprint seeks from SENTCO])	0589 – 0604
35	8/16/05	8/10/05 Hearing Exhibit SENTCO 5 (7/16/04, [Sprint's] Amended Application, Application No. 3204)	0605 – 0613
36	8/16/05	8/10/05 Hearing Exhibit SENTCO 6 (9/21/04, Sprint's Responses to Inte[r]venors' Data Requests, C-3204)	0614 – 0621

Tab No.	Date Filed	Document Filed	Bates Range
37	8/16/05	8/10/05 Hearing Exhibit SENTCO 8 (10/1/04, Testimony of James R. Burt on Behalf of Sprint, C-3204)	0622 – 0632
38	8/16/05	8/10/05 Hearing Exhibit SENTCO 10 (11/4/04, Transcript of Proceedings, C-3204, not verified by Reporter)	0633 – 0790
39	8/16/05	8/10/05 Hearing Exhibit SENTCO 12 (6/17/04, Application and Request for Authority *In the Matter of the Application of Time Warner Cable Information Services (Nebraska), LLC d/b/a Time Warner Cable for a Certificate of Authority to Provide Local and Interexchange Voice Services within the State of Nebraska*	0791 – 0834
40	8/16/05	8/10/05 Hearing Exhibit SENTCO 13	0835 – 0850
41	8/16/05	8/10/05 Hearing Exhibit SENTCO 14	0851 – 0862
42	8/16/05	8/10/05 Hearing Exhibit SENTCO 16 (9/17/04, Transcript of Proceedings re: Application No. C-3228, not verified by Reporter)	0863 – 0967
43	8/16/05	8/10/05 Hearing Exhibit SENTCO 18 (8/16/99-3/8/02, Tariff Schedule Applicable to Local Exchange Services Within the State of Nebraska Issued by Sprint Communications Company L.P., Nebraska Public Service Commission Local Exchange Tariff No. 1)	0968 – 1079
44	8/16/05	8/10/05 Hearing Exhibit SENTCO 19 (6/15/05, Time Warner Cable Information Services (Nebraska), LLC d/b/a Time Warner Cable, Nebraska Rules and Regulations and Schedule of Charges Applicable to Local and Interexchange Services, Nebraska P.S.C. Tariff No. 1)	1080 – 1126
45	8/16/05	8/10/05 Hearing Exhibit SENTCO 21 (7/29/05 letter from Brad A. Gasper, Sprint, to NPSC with attached 8/1/05 Sprint Communications Company, L.P. Nebraska Tariff P.S.C. No. 2 [introducing intrastate access service offered by Sprint's Competitive Local Exchange Carrier (CLEC)]).	1127 – 1243
46	8/16/05	8/10/05 Hearing Exhibit SENTCO 22 (8/3/05, Pre-Filed Rebuttal Testimony of Steven E. Watkins, C-3429)	1244 – 1290

Tab No.	Date Filed	Document Filed	Bates Range
47	8/16/05	8/10/05 Hearing Exhibit SENTCO 23 (8/9/05, notarized Certificate of NPSC Accountant John Burvainis [re: Sprint's Nebraska Tariff P.S.C. No. 1, that Sprint has no other tariff currently on file with the Commission; re: Time Warner Cable's Nebraska P.S.C. Tariff No. 1; that Time Warner has no other tariff currently on file with the Commission], C-3429)	1291 - 1292
48	8/16/05	8/10/05 Hearing Exhibit SENTCO 24 (8/9/05, notarized Certificate of NPSC Administrative Assistant Anne Bogus [attesting to accuracy and completeness of certain records and files relating to C-3204])	1293 – 1294
49	8/16/05	8/10/05 Hearing Exhibit SENTCO 25 (8/9/05, notarized Certificate of NPSC Administrative Assistant Anne Bogus [attesting to accuracy and completeness of certain records and files relating to C-3204])	1295 – 1296
50	8/17/05	Hearing Officer Order (Opinion and Findings; Order), C-3429; Certification of Order	1297 – 1299
51	9/2/05	Post-Hearing Brief of Southeast Nebraska Telephone Company, C-3429	1300 – 1320
52	9/2/05	[Southeast Nebraska Telephone Company's] Proposed Order-Interconnection Agreement Approved as Modified) , C-3429	1321 – 1341
53	9/9/05	Post-Hearing Brief of Sprint Communications Company L.P. , C-3429	1342 – 1434
54	9/9/05	Sprint Communications Company L.P.'s Proposed Order, C-3429	1435 – 1444
55	9/13/05	Findings and Conclusions; Order, C-3429; Certification of Order	1445 – 1460
56	10/11/05	Letter to NPSC with attached fully executed Interconnection and Reciprocal Compensation Agreement Between Southeast Nebraska Telephone Company and Sprint Communications L.P., C-3429	1461 – 1481
57	10/25/05	Notice of C-3429 application and public meeting 11/1/05	1482
58	11/2/05	Post-Decision Statement of Sprint Communications Company L.P. Concerning Interconnection Agreement To Be Approved Pursuant to Commission's September 13, 2005 Order, C-3429	1483 – 1486
59	11/2/05	Statement of Southeast Nebraska Telephone Company Concerning Interconnection Agreement To Be Approved Pursuant to Commission's September 13, 2005 Order	1487 – 1489
60	11/22/05	Opinion and Findings; Order; Certification of Order	1490 - 1492

The Record on Appeal shall also include a separate volume titled "Stipulated Confidential Record on Appeal" containing the following two documents:

Tab No.	Date Filed	Document Filed	Bates Range
1	8/16/05	8/10/05 Hearing Exhibit SENTCO 20 (7/18/05, Sprint Communications Company L.P.'s Responses to Southeast Nebraska Telephone Company's First Set of Interrogatories, Requests to Produce Documents and Requests for Admissions with attached unsealed envelope marked "[Confidential Attachments to Sprint Communications Company L.P. Responses to Data Requests]" containing two Wholesale Voice Services Agreements, and attached 10/8/04 Interconnection Agreement Between ALLTEL Nebraska, Inc. & Sprint Communications Company L.P., C-3429)	0001 Confidential – 0531 Confidential
2	8/16/05	8/10/05 Hearing Exhibit SENTCO 7 [Submitted in an envelope marked "Confidential"]	0532 Confidential – 0533 Confidential

Although plaintiff Sprint is e-filing this stipulation, due to the size of the stipulated record, the stipulated record need not be e-filed and instead Sprint has made arrangements to have a copy of the stipulated record and a copy of this stipulation delivered to the Clerk of the Court.

Dated: January 17, 2005

SPRINT COMMUNICATIONS COMPANY L.P.

By: s/

Raymond A. Cardozo, CA #173263
REED SMITH LLP
Two Embarcadero Center, Suite 2000
San Francisco, CA 94111
Tel:(415) 543-8700
Fax:(415) 391-8269
E-mail: rcardozo@reedsmith.com

Its Attorney

Dated: January 17, 2005

NEBRASKA PUBLIC SERVICE COMMISSION, FRANK E. LANDIS, JR., ANNE C. BOYLE, LOWELL JOHNSON, ROD JOHNSON AND GERALD L. VAP, Commission Defendants

By: s/

L. Jay Bartel, #17247
Assistant Attorney General
2115 State Capitol
Lincoln, NE 68509-8920
Tel: (402) 471-2682
E-mail: jay.bartel@ago.ne.gov

Their Attorney

Dated: January 17, 2005

SOUTHEAST NEBRASKA TELEPHONE COMPANY, Defendant/Intervenor

By: s/

Paul M. Schudel, #13723
James A. Overcash, #18627
WOODS & AITKEN LLP
301 South 13th Street, Suite 500
Lincoln, NE 68508
Tel: (402) 43607599
E-mail: pschudel@woodsaitken.com
E-mail: jovercash@woodsaitken.com

Its Attorneys

STATE OF NEBRASKA
PUBLIC SERVICE COMMISSION

IN RE:	)	
	)	**DOCKET NO.** C-3429
SPRINT COMMUNICATIONS COMPANY L.P.	)	
PETITION FOR ARBITRATION UNDER THE	)	
TELECOMMUNICATIONS ACT	)	
	)	

PETITION FOR ARBITRATION OF SPRINT COMMUNICATIONS COMPANY L.P.

Pursuant to Section 252 of the Telecommunications Act of 1996, Pub. L. No. 104-104, 110 Stat. 56 (1996) (codified at 47 U.S.C. § 151 *et seq.*) ("the Act"), Sprint Communications Company L. P. ("Sprint") petitions the Nebraska Public Service Commission ("the Commission") to arbitrate certain unresolved issues associated with the proposed interconnection agreement between Sprint and Southeast Nebraska Telephone Company ("Sentco").

PARTIES

Sprint is a competitive local exchange carrier ("CLEC") authorized to provide competitive local exchange telecommunications service within the state of Nebraska. Sprint's principal offices are located at 6200 Sprint Parkway, Overland Park, Kansas, 66251. Sentco is an incumbent local exchange carrier providing telephone exchange service and exchange access in the state of Nebraska. All correspondence, notices, inquiries and orders regarding this Petition should be directed to the parties and their counsel set forth below:

Diane C. Browning
6450 Sprint Parkway
Mailstop KSOPHN0212-2A511
Overland Park, KS 66251

Bradford E. Kistler
Kinsey Ridenouer Becker & Kistler, LLP
601 Lincoln Square
121 South 13th Street
Lincoln, NE 68501

RECEIVED
MAY 23 2005
NPSC-Comm. Dept.

Elizabeth A. Sickel
Southeast Nebraska Telephone Co.
110 W. 17th St.
Falls City, NE 68355

Paul M. Schudel
Woods & Aiken, LLP
301 S. 13th St., Suite 500
Lincoln, NE 68508

JURISDICTION

The Commission has jurisdiction over this Petition pursuant to the Act. In §252(b)(1), Congress created a specific arbitration procedure for ILECs and requesting telecommunications carriers to obtain state commission arbitration of any open issues arising after the ILEC receives a requesting telecommunications carrier's request for negotiation. Either party to a negotiation (the ILEC or the requesting telecommunications carrier) may request arbitration by the commission "during the period from the 135th to the 160th day after the date on which an incumbent local exchange carrier receives a request for negotiation under this section . . . ." §252(b)(1) of the Act.

Attached hereto as Exhibit 1 is a letter from Sentco's counsel dated December 22, 2004. This letter acknowledges December 16, 2004 as the date Sentco received Sprint's request for interconnection. Accordingly, the time period for filing this Petition for arbitration with the Commission, pursuant to §252(b)(1) of the Act, is April 29, 2005 through May 24, 2005. Sprint is filing this Petition for Arbitration timely, between the 135th and 160th day following Sentco's receipt of Sprint's interconnection request.

Sprint has complied with the statutory pre-condition to arbitration by issuing a request for negotiation to Sentco. Sprint is complying with the statutory procedural requirement by timely filing this Petition. Therefore, the requested arbitration falls squarely within the jurisdiction of the Commission.

BACKGROUND

Attached hereto as Exhibit 2 is the proposed draft Interconnection and Reciprocal Compensation Agreement ("the Agreement") between Sprint and Sentco. The Agreement reflects both the disputed and undisputed terms and conditions. Undisputed provisions are shown in normal text. Where there are known unresolved issues, each party's proposed language is identified and shown in italics. Sprint respectfully requests that the Commission order Sentco to enter into an interconnection agreement pursuant to the terms and conditions agreed to by the parties and, where no agreement exists, pursuant to the terms and conditions proposed by Sprint. If the parties identify any other provisions where the parties disagree, other than those identified in this Petition, Sprint respectfully requests that the Commission also resolve those issues.

ISSUES TO BE ARBITRATED

The issues in this arbitration stem from Sentco's assertion that the scope of the interconnection agreement should be limited to end users for whom Sprint is the customer-facing retail service provider. As set forth more fully below, the parties' dispute manifests itself primarily in two areas of the Agreement: the definition of "End User or End User Customer" and the definition of "Reciprocal Compensation." However, to the extent this issue affects any other provisions of the Agreement not specifically identified in this Petition, Sprint respectfully requests that the Commission also resolve the other affected provisions.

Sprint seeks to offer competitive alternatives in telecommunications services to consumers in the Falls City area, through a market entry model in which Sprint, working with other competitive telecommunications providers, provides competitive local voice telecommunications services. Specifically, Sprint has entered into a business arrangement with

Time Warner Cable ("Time Warner") to support Time Warner's offering of local and long distance voice services in the Falls City area. Pursuant to its arrangement with Time Warner, Sprint provides telecommunications services, including but not limited to interconnection to the public switched telephone network (PSTN), number acquisition and administration, submission of local number portability orders to the ILEC, inter-carrier compensation for local and toll traffic, E911 connectivity, operator services, directory assistance, directory assistance call completion and the placement of orders for telephone directory listings. Time Warner provides the "last mile" network over hybrid fiber coaxial facilities, marketing and sales, end user billing, and customer service.

Sprint has successfully implemented this market entry model with Time Warner in the Lincoln metropolitan area by entering into an interconnection agreement with the ILEC in that area. In addition, Sprint has implemented this market entry model in conjunction with various cable companies in twelve (12) other states: Missouri, Minnesota, Kansas, Illinois, Mississippi, Louisiana, Wisconsin, Ohio, Michigan, Texas, New York, and New Jersey. In these other ILEC territories, Sprint is currently providing the same services outlined above to nearly 400,000 subscribers without issue. Sprint is simply requesting the same arrangement with Sentco that Sprint has successfully implemented with the ILECs in these other territories.

In fact, it appears the NPSC has endorsed Sprint's business arrangement with Time Warner in Sprint's CLEC Certification Order, Docket No. C-3204, dated February 8, 2005 ("the Sprint CLEC Order"). The Sprint CLEC Order states on p. 2 as follows (italics added):

> "Initially, Sprint proposes to provide transport, switching and interconnection for the origination and termination of local and long distance traffic. These services will be provided upon request of wholesale customers within the state of Nebraska. No deposits will be required. Sprint intends to partner with cable companies who want to provide local and long distance service. One such relationship exists with Time Warner Cable, whose CLEC application was granted on November 23, 2004. Time Warner

Cable will provide end user billing, marketing and sales, customer service and customer access. *Sprint provides wholesale services that enable the Time Warner Cable retail service.*"

Clearly, the Commission contemplated and endorsed Sprint's business arrangement with Time Warner.

ISSUE NO. 1

Should the definition of "End User or End User Customer" include end users of a service provider for whom Sprint provides interconnection and other telecommunications services? (Section 1.6 and as applied elsewhere in the Agreement.)

SPRINT POSITION: As discussed above, the NPSC has already contemplated and endorsed Sprint's business arrangement with Time Warner in Sprint's CLEC Certification Order. Accordingly, the definition of "End User or End User Customer" in Section 1.6 should include end users of a service provider for whom Sprint provides interconnection and other telecommunications services, including Time Warner.

Sprint is a telecommunications carrier providing telecommunications services. Sprint is a telecommunications carrier[1] providing telecommunications services under the Act. Section 153(46) of the Act defines telecommunications services as the "offering of telecommunications for a fee directly to the public, *or to such class of users as to be effectively available directly to the public,* regardless of the facilities used." (italics added) Clearly, Sprint will be providing telecommunications services within the meaning of this definition.

Sentco's position would preclude Sprint from being able to provide the PSTN interconnection services the competing service providers require and want Sprint to provide for them. This position would effectively eliminate this form of local service competition in

[1] Section 153(44) of the Act provides that "[t]he term telecommunications carrier" means any provider of telecommunications services, except that such term does not include aggregators of telecommunications services (as defined in Section 226)." Sprint is not an aggregator as that term is defined under §226 the Act, because Sprint does not merely make telephones available to the public for interstate telephone calls using a provider of operator services.

Sentco's exchanges. Sentco is suggesting that this market entry business model is unacceptable. Allowing any ILEC, including an RLEC, to limit the forms of competition in its service area is contrary to the pro-competition goals of the Act. The Act contemplates, and the FCC embraces, innovative market entry models. The FCC's most recent Unbundled Network Element Order (Docket Number 04-313 and 01-338, released on February 4, 2005), states in paragraph two, "In this Order, the Commission takes additional steps to encourage the innovation and investment that come from facilities-based competition." Sprint is prepared to provide facilities-based competition as envisioned by the FCC, once it obtains interconnection with Sentco.

Sprint's third party business arrangements as a provider of PSTN services require Sprint to meet all inter-carrier contractual obligations required by state and/or federal law, rules, decisions or orders, including obtaining all necessary interconnection agreements. Sprint maintains that the execution of the Agreement would bind Sprint to all of the terms and conditions of the Agreement regardless of the direct or indirect relationship with an end user whose traffic is being exchanged. Sprint is the carrier that will be providing number acquisition, telephone number assignment (including LRNs), port requests, and switching and transport of local calls and exchange access to and from the PSTN (including calls to 911) for end users. Accordingly, Sentco's position that only service providers providing services directly to end user customers are eligible to enter into an interconnection agreement with Sentco is anti-competitive and establishes limitations to a competitor's market entry model, which is inconsistent with the spirit and letter of the Act.

The Public Utilities Commission of Ohio ("PUCO") has considered the very same issue. In its Finding and Order dated January 26, 2005, PUCO stated as follows:

> "The Commission observes that MCI is a certificated carrier in the state of Ohio. As such, MCI is a provider of telecommunications services and is qualified to submit an interconnection request to Applicants. Further, the commission finds that MCI is acting in a role no different than other telecommunications carriers whose network could interconnect with Applicants so that traffic is terminated to and from each network and across networks. Therefore, the Commission disagrees with Applicants that MCI is not a telecommunications carrier and that Applicants have no duty to interconnect with MCI."[2]

Further, in its recent Order on Rehearing dated April 13, 2005, PUCO denied rehearing on the issue of whether MCI was providing telecommunications service. The Order on Rehearing states as follows:

> "The Commission denies rehearing on Applicants' fifth assignment of error. The Commission agrees with Applicants that 47 U.S.C. §251(a)(1) and (c)(2) require Applicants to interconnect with other "telecommunications carriers" and that 47 U.S.C. §153(44) defines a "telecommunications carrier" as "any provider of telecommunications services." The Commission also observes, as do Applicants, that the 47 U.S.C. §153 definition of "telecommunications service" is "the offering of telecommunications for a fee directly to the public, or to classes of users as to be effectively available to the public, regardless of the facilities used." Applying this definition to MCI and its BFR, the Commission notes that MCI will doubtless collect a fee for providing telecommunications via interconnection with Applicants. *Further, MCI's arrangements with Time Warner will make the interconnection and services that MCI negotiates with Applicants "effectively available to the public, regardless of the facilities used."*[3]

While the Ohio ruling resulted from a rural exemption proceeding, which is not the context in which the instant case arises, the portion of the ruling pertaining to MCI's provision of telecommunications service is compelling. Sprint will, for a fee, be providing interconnection for purposes of access to the public switched telephone network (PSTN). Like MCI in the Ohio case, Sprint emphasizes that Sprint's proposed interconnection agreement with Sentco places Sprint in the same position as other intermediate carriers whose

---

[2] In the Matter of the Application and Petition in Accordance with Section II.A.2.b. of the Local Service Guidelines Filed by: The Champaign Telephone Company et. al, Case No. 04-1494-TP-UNC *et. seq.*, Finding and Order, January 26, 2005.

[3] In the Matter of the Application and Petition in Accordance with Section II.A.2.b. of the Local Service Guidelines Filed by: The Champaign Telephone Company et. al, Case No. 04-1494-TP-UNC *et. seq.*, Order on Rehearing, April 13, 2005 (italics added).

interconnections terminate traffic to and from each network and across networks. If Sentco were to prevail in its argument, by extension Sentco would have no duty to provide interconnection for transit purposes.

Sprint is entitled to interconnection under §251(a) and (b). As discussed above, Sprint is a telecommunications carrier within the meaning of §153(44) of the Act. As such, Sentco has a duty to interconnect directly or indirectly with Sprint pursuant to §251(a) of the Act.

§251(a) of the Act requires each telecommunications carrier to interconnect directly or indirectly with the facilities and equipment of other telecommunications carriers. This requirement is essential to ensure the operation of the nationally interconnected network that is in place today. Additionally, the FCC's regulations (47 CFR 51.5) include the following definition for interconnection: "Interconnection is the linking of two networks for the mutual exchange of traffic". The mutual exchange of traffic must include traffic from all end users and cannot be limited by Sentco to exclude end users of a service provider for which Sprint is providing telecommunications services.

Furthermore, as a telecommunications carrier, Sprint is entitled to all the rights enjoyed by telecommunications carriers under §251 of the Act, which includes rights under §251(b). The Federal Communications Commission ("FCC") has held that a directory assistance provider's provision of "call completion" entitled the provider to nondiscriminatory directory assistance database access under §251(b)(3), whether or not the provider was certified by the state as a CLEC.[4] As explained above, Sprint will be providing much more extensive

[4] *Provision of Directory Listing Information under the Telecommunications Act of 1934, as Amended*, CC-Docket No. 99-273, First Report and Order, 2001 FCC Lexis 473, para. 18 (2001).

telecommunications service than the directory assistance provider in the FCC ruling. Accordingly, Sprint is entitled to rights under §251(b).

Conclusion. Because Sprint is a telecommunications carrier under the Act, and Sprint is entitled to interconnection and other rights under §251(a) and (b) of the Act, the definition of "End User or End User Customer" in Section 1.6 of the Agreement should include end users of a service provider for whom Sprint provides interconnection and other telecommunications services.

SENTCO POSITION: The definition of "End User or End User Customer" in Section 1.6 of the Agreement should be limited to end users for whom Sprint is the customer-facing retail service provider. Sentco has not indicated to Sprint the basis for its position.

ISSUE NO. 2

Should the definition of "Reciprocal Compensation" include the transportation and termination on each carrier's network of all Local Traffic? (Section 1.21 and as applied elsewhere in the Agreement.)

SPRINT POSITION: The definition of "Reciprocal Compensation" should include the transportation and termination on each carrier's network of all Local Traffic (as that term is defined in Section 1.13 of the Agreement).

This issue relates to Sentco's assertion that the scope of the Agreement should be limited to those end users for whom Sprint is the customer-facing retail service provider. As discussed in detail above, the NPSC has contemplated and endorsed Sprint's business arrangement with Time Warner in Sprint's CLEC Certification Order. In addition, Sprint is a telecommunications carrier within the meaning of §153(44) of the Act and is entitled to interconnect under §251(a) and receive the benefits of §251(b) of the Act. Nothing in these

provisions suggests that the scope of the Agreement should be limited to end users for whom Sprint is the customer-facing provider of retail services.

SENTCO POSITION: The definition of Reciprocal Compensation should exclude end users of a service provider for whom Sprint provides interconnection and other telecommunications services, such as Time Warner. Sentco has not indicated to Sprint the basis for its position.

RELIEF REQUESTED

Sprint respectfully requests the Commission to:

1) Docket and refer the proceeding for arbitration of the unresolved issues identified in this Petition in accordance with the requirements of Sections 251 and 252 of the Act and the rules set forth in Progression Order No. 3, Docket No. C-1128, dated August 19, 2003;

2) Require the parties to enter into an interconnection agreement that includes all of the terms agreed to by the parties and, on all disputed issues, the terms and contract language proposed by Sprint in the Agreement attached as Exhibit 2;

3) Order the parties to file for approval, pursuant to Section 252(e) of the Act, an interconnection agreement incorporating the Commission's decisions as described above; and

4) Issue such other relief as is just and proper.

Respectfully submitted on this 20th day of May, 2005,

SPRINT COMMUNICATIONS COMPANY L.P.

By: Diane Browning

Diane C. Browning
6450 Sprint Parkway
Mailstop KSOPHN0212-2A511
Overland Park, KS 66251
Voice: 913-315-9284
Fax: 913-523-0571
diane.c.browning@mail.sprint.com

0010

CERTIFICATE OF SERVICE

The undersigned hereby certifies that the foregoing was served by Federal Express or U.S. mail, postage prepaid to the following on the 20th day of May, 2005:

Mr. Andy Pollock
Executive Director
Public Service Commission of Nebraska
1200 N St 300 The Atrium
Lincoln NE 68508

Elizabeth A. Sickel
Southeast Nebraska Telephone Company
110 W 17th St
Falls City NE 68355

Paul M. Schudel
Woods & Aiken LLP
301 S 13th St Ste 500
Lincoln NE 68508

Diane C. Browning

ALLEN L. OVERCASH
PAUL M. SCHUDEL
EDWARD H. TRICKER
WM. LEE MERRITT
JOSEPH H. BADAMI
KERRY L. KESTER
ROBERT B. EVNEN
JOEL D. HEUSINGER
TERRY C. DOUGHERTY
JENNIFER J. STRAND
CRAIG C. DIRRIM
BRUCE A. SMITH
JEFFERY T. PEETZ
KENT E. ENDACOTT
KRISTA L. KESTER
JAMES A. OVERCASH
NATHAN J. GURNSEY
KORY D. GEORGE
ANDREW B. KOSZEWSKI
TODD W. WEIDEMANN
DAVID J. MCCLURE

WOODS & AITKEN
L · L · P

DEC 2 7 2004

C-3429

LINCOLN OFFICE
SUITE 500
301 SOUTH 13TH STREET
LINCOLN, NEBRASKA 68508-2578
TELEPHONE 402-437-8500
FAX 402-437-8558

OMAHA OFFICE
SUITE 350
10250 REGENCY CIRCLE
OMAHA, NEBRASKA 68114-3754
TELEPHONE 402-898-7400
FAX 402-898-7401

WWW.WOODSAITKEN.COM
Please Respond to Lincoln Office

December 22, 2004

Email: PSchudel@woodsaitken.com
Direct Dial: (402) 437-8509

VIA UNITED STATES MAIL AND EMAIL

RECEIVED
MAY 2 3 2005
NPSC-Comm. Dept.

Monica M. Barone, Esq.
Mail Stop KSOPHN0212-2A203
6450 Sprint Parkway
Overland Park, Kansas 66251

Dear Monica:

Thank you for providing your December 16 letter in response to mine dated December 15, 2004. Certain points mentioned in your letter require further clarification or comment.

First, since your letter contains the initial identification of Sprint Communications Company, L.P. ("SCC") as the legal entity seeking interconnection, Southeast Nebraska Telephone Company ("SENTCO") will regard December 16, 2004 as the date of receipt of SCC's request.

Second, as you will note in the second paragraph of my December 15 letter to you, SENTCO did not condition negotiation of an interconnection arrangement upon the requesting party first obtaining a certificate. Rather, I noted that "certification is required prior to *implementing* any terms and conditions of an interconnection agreement." (emphasis added)

Third, in response to my request that you specifically identify the "interconnection, services or network elements" that are requested from SENTCO, you have referred SENTCO to the "diagrams depicting possible interconnection scenarios." With all due respect, the six diagrams depicted on the pages attached to Ms. Ruperto's November 13, 2004 letter are not sufficiently detailed to provide the specific information from which one could reasonably discern the aspect of Section 251(c) of the Communications Act of 1934, as amended (the "Act") that SCC contends is triggered by its request. In fact, one could reasonably interpret the diagrams you reference to implicate different provisions of Section 251 of the Act.

As you are aware, SCC, through its authorized representative, has affirmed under oath to the Nebraska Public Service Commission ("Commission") that SCC will abide by the requirements of Section 251(f) of the Act. *See generally* Testimony of James R. Burt, Application No. C-3204,

EXHIBIT 1

Transcript at 75-76. SCC's failure to respond with the specific information that SENTCO requested in my December 15 letter raises significant questions regarding SCC's representations to the Commission. Moreover, applicable Commission decisions suggest that Section 251(f) procedures must be addressed prior to any negotiations taking place. *See* Order, Application No. C-3228, issued November 23, 2004 at 5-6.

Accordingly, SENTCO renews its request that SCC "identify with particularity the nature of such "interconnection, services, or network elements" that it seeks from SENTCO." SENTCO December15, 2004 Letter at 1.

Finally, responsive to the next to last paragraph of your December 16 letter, SENTCO would like all future communications from SCC regarding this matter to be directed to me rather than to Ms. Sickel.

Very truly yours,

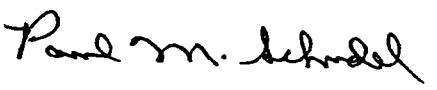

PMS|dh
cc: M. Gene Hand, Nebraska Public Service Commission
Elizabeth Sickel

EXHIBIT 2

C-3429

RECEIVED
MAY 23 2005
NPSC-Comm. Dept.

INTERCONNECTION AND RECIPROCAL COMPENSATION AGREEMENT

BETWEEN

SOUTHEAST NEBRASKA TELEPHONE COMPANY

AND

SPRINT COMMUNICATIONS, L.P.

TABLE OF CONTENTS

Page

I. Article I 1
- 1.0 INTRODUCTION 1
- 2.0 RECITALS 1

II. Article II 1
- 1.0 DEFINITIONS 1
- 2.0 INTERPRETATION AND CONSTRUCTION 4
- 3.0 SCOPE 4
- 4.0 SERVICE AGREEMENT 5
- 5.0 COMPENSATION 6
- 6.0 NOTICE OF CHANGES 7
- 7.0 GENERAL RESPONSIBILITIES OF THE PARTIES 8
- 8.0 TERM AND TERMINATION 8
- 9.0 CANCELLATION CHARGES 9
- 10.0 NON-SEVERABILITY 9
- 11.0 INDEMNIFICATION 9
- 12.0 LIMITATION OF LIABILITY 10
- 13.0 DISCLAIMER 11
- 14.0 REGULATORY APPROVAL 11
- 15.0 PENDING JUDICIAL APPEALS AND REGULATORY RECONSIDERATION 11
- 16.0 MOST FAVORED NATION PROVISION 12
- 17.0 MISCELLANEOUS 12
- 18.0 DISPUTE RESOLUTION 17

I. Article I

1.0 INTRODUCTION

This Interconnection and Reciprocal Compensation Agreement ("Agreement") shall be effective as of _____, 2005 (the "Effective Date"), by and between Southeast Nebraska Telephone Company ("SENTCO") with it principal place of business at 110 West 17th Street, Falls City, Nebraska 68355 and Sprint Communications, L. P., a Delaware limited partnership with its principal place of business at 6200 Sprint Parkway, Overland Park, Kansas 66251 ("Sprint").

2.0 RECITALS

WHEREAS, SENTCO is an incumbent Local Exchange Carrier providing Telephone Exchange Service and Exchange Access in the State of Nebraska;

WHEREAS, Sprint is authorized by the Commission to provide competitive local exchange telecommunications service within the State of Nebraska;

WHEREAS, SENTCO and Sprint wish to establish Interconnection and Reciprocal Compensation arrangements for exchanging traffic as specified below;

WHEREAS, SENTCO certifies that it is a rural telephone company and is exempt from Section 251(c) pursuant to Section 251(f) of the Communications Act of 1934, as amended by the Telecommunications Act of 1996 (the "Act");

WHEREAS, Sprint confirms to SENTCO that its request for interconnection with SENTCO was only intended to address the interconnection obligations under Section 251(a) and (b) of the Act and the procedures for negotiation, arbitration and approval of agreements under Section 252 of the Act;

WHEREAS, Sections 251 and 252 of the Act have specific requirements for Interconnection, and the Parties intend that this Agreement meets these requirements.

NOW, THEREFORE, in consideration of the mutual provisions contained herein and other good and valuable consideration, the receipt and sufficiency of which are hereby acknowledged, SENTCO and Sprint hereby agree as follows:

II. Article II

1.0 DEFINITIONS

Special meanings are given to common words in the telecommunications industry, and coined words and acronyms are common in the custom and usage in the industry. Words used in this contract are to be understood according to the custom and usage of the telecommunications industry, as an exception to the general rule of contract interpretation that words are to be

understood in their ordinary and popular sense. In addition to this rule of interpretation, the following terms used in this Agreement shall have the meanings as specified below:

1.1. "Act" means the Communications Act of 1934, as amended.

1.2. "Affiliate" means a person that (directly or indirectly) owns or controls, is owned or controlled by, or is under common ownership or control with, another person. For purposes of this paragraph, the term "own" means to own an equity interest (or the equivalent thereof) of more than 10 percent.

1.3. "End Office Switch" means a switch used to provide Telecommunications Service to subscribers and may include, but is not limited to one of the following:

(a) "Stand-Alone End Office Switch" is a switch in which the subscriber station loops are terminated for connection to either lines or trunks. The subscriber receives terminating, switching, signaling, transmission, and related functions for a defined geographic area by means of a Stand-Alone End Office Switch.

(b) "Remote End Office Switch" is a switch in which the subscriber station loops are terminated. The control equipment providing terminating, switching, signaling, transmission, and related functions would reside in a Host End Office Switch. Local switching capabilities may be resident in a Remote End Office Switch.

(c) "Host End Office Switch" is a switch with centralized control over the functions of one or more Remote End Office Switches. A Host End Office Switch can serve as a Stand-Alone End Office Switch as well as providing services to other Remote End Office Switches requiring terminating, signaling, transmission, and related functions including local switching.

1.4. "Commission" means the Public Service Commission of Nebraska.

1.5. "Effective Date" means the date first above written.

1.6. "End User or End User Customer" means the residence or business subscriber that is the ultimate user of Telecommunications Services provided by either of the Parties or by a third-party telecommunications carrier. **[NOTE: SENTCO's position is that a period should be placed following the word "Parties".]**

1.7. "Exchange Access" has the meaning given in the Act.

1.8. "FCC" means the Federal Communications Commission.

1.9. "Interconnection" for purposes of this Agreement is the linking of SENTCO and Sprint networks for the exchange of Local Traffic described in this Agreement.

1.10. "Interexchange Carrier" or "IXC" means a Telecommunications Carrier that

provides Telephone Toll Service, as defined in the Act

1.11. "ISP Bound Traffic" means traffic that is originated on the network of either of the Parties and is transmitted to or returned from the Internet at any point during the duration of the transmission; provided, however, that ISP Bound Traffic shall not include voice traffic.

1.12. "Local Service Area" means, the certified exchange service area within which SENTCO is authorized by the Commission to provide Telephone Exchange Service.

1.13. "Local Traffic" is defined for all purposes under this Agreement as traffic that is originated by and terminated to End Users physically located within the Local Service Area. Local Traffic includes traffic exchanged between the parties when some portion of such traffic is circuit switched but does not include ISP Bound Traffic.

1.14. "Local Exchange Carrier" or "LEC" is as defined in the Act.

1.15. "Non-Local Traffic" means any traffic that is not Local Traffic as defined above, but does not include ISP Bound Traffic.

1.16. "NPA" or the "Number Plan Area" also referred to as an "area code" refers to the three-digit code which precedes the NXX in a dialing sequence and identifies the general calling area within the North American Numbering Plan scope to which a call is routed (i.e., NPA/NXX-XXXX).

1.17. "NXX" means the three-digit code, which appears as the first three digits of a seven-digit telephone number within a valid NPA or area code.

1.18. "Party" means either SENTCO or Sprint, and "Parties" means SENTCO and Sprint.

1.19. "Point of Interconnection" ("POI") means that technically feasible point of demarcation located within SENTCO's network where the exchange of Local Traffic between the Parties takes place.

1.20. "Rate Center" means the specific geographic point and corresponding geographic area that is associated with one or more NPA-NXX codes that have been assigned to an incumbent LEC for its provision of Telecommunications Service.

1.21. "Reciprocal Compensation" means an arrangement between two carriers in which each receives compensation from the other carrier for the transport and termination on each carrier's network of Local Traffic, as defined in Section 1.13 above. **[NOTE: SENTCO requests the addition of the phrase "that originates on the network facilities of the other carrier" at the end of the preceding sentence.]**

1.22. "Telecommunications" has the meaning given in the Act.

1.23. "Telecommunications Carrier" has the meaning given in the Act.

1.24. "Telecommunications Service" has the meaning given in the Act.

1.25. "Telephone Exchange Service" has the meaning given in the Act.

1.26. "Telephone Toll Service" has the meaning given in the Act.

1.27. "Termination" means the switching of Local Traffic at the terminating carrier's End Office Switch, or equivalent facility, and delivery of such traffic to the called party.

1.28. "Transport" means the transmission of Local Traffic subject to Section 251(b)(5) of the Act from the Point of Interconnection between the Parties to the terminating carrier's End Office Switch that directly serves the called party, or equivalent facility provided by a carrier other than an incumbent LEC.

2.0 INTERPRETATION AND CONSTRUCTION

All references to Sections, Exhibits and Schedules shall be deemed to be references to Sections of, and Exhibits and Schedules to, this Agreement unless the context shall otherwise require. The headings of the Sections and the terms are inserted for convenience of reference only and are not intended to be a part of or to affect the meaning of this Agreement. Unless the context shall otherwise require, any reference to any agreement, other instrument or other third party offering, guide or practice, statute, regulation, rule or tariff is for convenience of reference only and is not intended to be a part of or to affect the meaning of a rule or tariff as amended and supplemented from time-to-time (and, in the case of a statute, regulation, rule or tariff, to any successor provision). The Parties acknowledge that some of the services, facilities, or arrangements described herein reference the terms of federal or state tariffs of the Parties. Each Party hereby incorporates by reference those provisions of any tariff that governs any terms specified in this Agreement. If any provision of this Agreement and an applicable tariff cannot be reasonably construed or interpreted to avoid conflict, the Parties agree that the conflicting provision contained in this Agreement shall prevail.

3.0 SCOPE

3.1. This Agreement is intended, inter alia, to describe and enable specific Interconnection and Reciprocal Compensation arrangements between the Parties. This Agreement does not obligate either Party to provide arrangements not specifically provided for herein.

3.2. This Agreement sets forth the terms, conditions, and rates under which the Parties agree to interconnect their networks for purposes of exchanging Local Traffic originated by the Parties' respective End Users.

3.3. Sprint represents that it is a provider of Telecommunications Service to End Users in Nebraska. Sprint's NPA/NXXs are listed in Telcordia's Local Exchange Routing Guide ("LERG"), and this Agreement shall apply to all Operating Company Numbers ("OCN") assigned to Sprint.

3.4. This Agreement is limited to SENTCO End Users' traffic for which SENTCO has

tariff authority to carry. SENTCO's NPA/NXXs are listed in the LERG under OCN 1591, in the State of Nebraska.

3.5. The traffic that is exchanged between the Parties through an Interexchange Carrier, on a toll basis, is not Local Traffic and is not subject to this Agreement, but rather is subject to Section 251(b)(3) and 251(g) of the Act.

4.0 SERVICE AGREEMENT

This Agreement provides for the following interconnection and arrangements between the networks of SENTCO and Sprint. Routing of traffic shall be as described in this section, except that, alternatives may be employed in the event of emergency or temporary equipment failure.

4.1. The Parties shall physically connect their networks via dedicated connections/circuits at the POI. Each Party shall be solely responsible for the cost and operation of the facilities to its side of the POI. The Parties acknowledge that options are available to each Party to accomplish such connections to the POI. These options include provision of dedicated circuits by the Party, provision of dedicated circuits arranged through third parties, or tariffed service offerings by SENTCO to the extent that Sprint so elects. If any third party is used by a Party to arrange for dedicated connection to the POI, such Party, in addition to bearing all costs associated with the use of such third party's network, shall be solely responsible for such third party's activities to accomplish such connection. If a Party elects to utilize a third party pursuant to this section, the other Party agrees to work cooperatively with such third party to establish and maintain the physical connection at the POI in a manner that is consistent with then existing industry technical standards.

4.2. Unless the Parties otherwise mutually agreed, all Local Traffic exchanged between the Parties shall be transmitted on trunks solely dedicated to such Local Traffic. Neither Party may terminate intra-LATA or inter-LATA toll switched access traffic or originate toll-free traffic over dedicated Local Traffic trunks. N11 codes (including but not limited to, 411, 611, & 911) shall not be sent between the Parties' networks via Local Traffic trunk groups. Local Traffic exchange shall be provided via two-way trunks where technically and operationally feasible unless both Parties agree to implement one-way trunks.

The Parties will cooperatively develop joint forecasting for traffic utilization over Local Traffic trunk groups provided pursuant to this Agreement. Orders for trunks that exceed forecasted quantities for forecasted locations will be accommodated as facilities and/or equipment becomes available. The Parties will make all reasonable efforts and cooperate in good faith to develop alternative solutions to accommodate orders when facilities are not available. Inter-company forecast information will be exchanged by the Parties upon reasonable request. The capacity of facilities provided by each Party will be based on mutual forecasts and sound engineering practice, as mutually agreed to by the Parties.

4.3. The Parties agree to exchange Local Traffic in a manner that is consistent with their respective duties to comply with applicable dialing parity requirements associated with such traffic.

5.0 COMPENSATION

5.1. Reciprocal Compensation is applicable for Transport and Termination of Local Traffic as defined in Section 1.13 and is related to the exchange of traffic described in Section 4. For the purposes of billing compensation for Local Traffic, billed minutes will be based upon records/reports provided by third parties or actual recorded usage. Measured usage begins when the terminating recording End Office Switch receives answer supervision from the called End User and ends when the terminating End Office Switch receives or sends disconnect (release message) supervision, whichever occurs first. The measured usage is aggregated at the end of the measurement cycle and rounded to a whole minute. Billing for Local Traffic shall be based on the aggregated measured terminating usage to SENTCO less traffic recorded as local that is Non-Local Traffic. Notwithstanding any provision to the contrary set forth herein, the Parties agree that Reciprocal Compensation for Transport and Termination of Local Traffic shall be determined on the basis of actual recorded usage. Further, and notwithstanding any provision to the contrary set forth herein, the Parties agree to exchange ISP Bound Traffic in accordance with Section 5.2.

5.2. The Parties agree to exchange ISP Bound Traffic in accordance with the Order on Remand by the FCC in CC Docket No. 96-98 on April 27, 2001. Specifically, SENTCO has not offered or adopted the FCC's rate caps as set forth in that Order; pursuant to paragraph 81 of that Order, SENTCO is required to pay intercarrier compensation for ISP Bound Traffic on a bill and keep basis. Further, the Parties acknowledge that because they did not exchange any ISP Bound Traffic pursuant to an interconnection agreement prior to the date of the above-referenced Order, all minutes of ISP Bound Traffic are to be exchanged on a bill and keep basis between the Parties in accordance with paragraph 81 of the Order, such that neither Party owes the other Party any compensation for the origination, transport or termination of such traffic.

5.3. The rate for Reciprocal Compensation shall be $0.024 per minute.

5.4. Non-Local Traffic shall be terminated to a Party subject to that Party's tariffed access charges. Each Party warrants and represents that it will not provision any of its services or exchange any traffic hereunder in a manner that permits the unlawful avoidance of the application of intrastate or interstate access charges by any other party including, but not limited to, third party carriers, aggregators and resellers. Each Party also agrees to take all reasonable steps to terminate any service to an End User that permits such End User to unlawfully avoid the application of access charges by the other Party. Telecommunications traffic to or from End Users that originates or terminates in areas other than the Local Service Area is subject to intrastate or interstate access charges regardless of whether the traffic may have been converted to Internet Protocol or any other transmission protocol during the routing and transmission of the call.

5.5. The following provisions shall apply to calculation of payments and billings:

5.5.1. SENTCO will compensate Sprint for Local Traffic delivered by SENTCO to Sprint for termination, as prescribed in Section 5.1, at the rate provided in Section 5.3, above. Sprint will compensate SENTCO for Local Traffic delivered to SENTCO for termination to SENTCO's End Users as prescribed in Section 5.1 at the rate provided in Section 5.3. As applicable, the Parties will compensate each other for Non-Local Traffic at the rates provided in Section 5.4

5.5.2. Each Party shall prepare monthly billing statement(s) to the other Party, that will separately reflect the calculation of Reciprocal Compensation payable pursuant to Sections 5.1 and 5.3 and access charges pursuant to Section 5.4.

6.0 NOTICE OF CHANGES

If a Party contemplates a change in its network, which it believes will materially affect the inter-operability of its network with the other Party, the Party making the change shall provide at least ninety (90) days advance written notice of such change to the other Party.

7.0 GENERAL RESPONSIBILITIES OF THE PARTIES

7.1. The Parties are each solely responsible for participation in and compliance with national network plans, including The National Network Security Plan and The Emergency Preparedness Plan. Each Party shall solely be responsible for its Communications Assistance for Law Enforcement Act ("CALEA") enforcement-related activity. Each Party shall also ensure that it takes all actions necessary for a full response to any CALEA and/or other law enforcement-related inquiry related in any manner to the originating/terminating traffic from an End User it serves and that such actions are completed in a timely manner. In the event that either Party fails to comply with any one or more of these obligations and an action is brought or costs imposed upon the other Party, the Party that failed to comply shall indemnify the other Party pursuant to the requirements of Section 11.0 of this Agreement. Neither Party shall use any service provided pursuant to this Agreement in any manner that prevents other persons from using or adversely impacts their Telecommunications Service, and subject to notice and a reasonable opportunity of the offending Party to cure any violation, either Party may discontinue or refuse service if the other Party violates this provision.

7.2. Both Parties agree to utilize SS7 Common Channel Signaling ("SS7") between their respective networks for the exchange of traffic addressed in this Agreement in order to track and monitor the traffic that is being exchanged at the POI. Both Parties shall provide SS7 connectivity in accordance with accepted industry practice and standard technical specifications, and shall exchange all originally-generated SS7 messages for call set-up, including without limitation, ISDN User Part ("ISUP") and Transaction Capability User Part ("TCAP") messages, and SS7-based features and functions between their respective networks, including CLASS features and functions.

7.3. Each Party is responsible for obtaining Local Exchange Routing Guide ("LERG")

listings of the Common Language Location Identifier ("CLLI") assigned to its switches.

7.4. 911/E911. Each Party is solely responsible for the receipt and transmission of 911/E911 traffic originated by End Users of its Telephone Exchange Service. The Parties acknowledge that calls to 911/E911 services shall not be routed over the interconnection trunk group(s). To the extent that a Party incorrectly routes such traffic over such arrangements, that Party shall fully indemnify and hold harmless the other Party for any claims, including claims of third parties, related to such calls.

8.0 TERM AND TERMINATION

8.1. Subject to the provisions of Section 14, the initial term of this Agreement shall be for a one (1) year term (the "Initial Term"), which shall commence on the Effective Date, and thereafter shall continue on a month to month basis, unless terminated or modified pursuant to the terms and conditions of this Agreement.

8.2. Either Party may request this Agreement to be renegotiated at any time after the expiration of the Initial Term. The Party desiring renegotiation shall provide written notice to the other Party. Not later than thirty (30) days following receipt of such notice, the receiving Party will acknowledge receipt of the written notice and the Parties will commence negotiation, which shall be conducted in good faith, except in cases in which this Agreement has been terminated for default. Provided the Parties are pursuing negotiation or arbitration of a new Agreement, this Agreement will continue in full force and effect until such new Agreement is effective.

8.3. If, within one hundred and thirty-five (135) days following the date of written notice of desire to renegotiate referred to in the preceding section, the Parties are unable to negotiate new terms, conditions and prices for a new agreement between the Parties, either Party may petition the Commission to establish appropriate terms, conditions and prices for such new agreement pursuant to 47 U.S.C. § 252. Any pricing terms and conditions of the new agreement between the Parties arrived at through negotiation and/or arbitration shall be retroactively effective as of the date of the written request seeking renegotiation. Unless the Parties otherwise mutually agree, true-ups or adjustments arising from any new pricing terms and conditions shall be implemented as of the effective date of the new agreement described herein.

8.4. The Parties agree that disputed and undisputed amounts due under this Agreement shall be handled as follows:

8.4.1. If any portion of an amount due to a Party (the "Billing Party") under this Agreement is subject to a bona fide dispute between the Parties, the Party billed (the "Non-Paying Party") shall, within thirty (30) days of its receipt of the invoice containing such disputed amount, give written notice to the Billing Party of the amounts it disputes ("Disputed Amounts") and include in such notice the specific details and reasons for disputing each item. The Non-Paying Party shall pay when due all undisputed amounts to the Billing Party. The Parties will work together in good faith to resolve issues relating to the disputed amounts. If the

dispute is resolved such that payment of the disputed amount is required, whether for the original full amount or for the settlement amount, the Non-Paying Party shall pay the full disputed or settlement amounts with interest at the lesser of (i) one and one-half percent (1-1/2%) per month or (ii) the highest rate of interest that may be charged under Nebraska's applicable law. In addition, the Billing Party may initiate a complaint proceeding with the appropriate regulatory or judicial entity, if unpaid undisputed amounts become more than 90 days past due, provided the Billing Party gives an additional 30 days notice and opportunity to cure the default.

8.4.2. Any undisputed amounts not paid when due shall accrue interest from the date such amounts were due at the lesser of (i) one and one-half percent (1-1/2%) per month or (ii) the highest rate of interest that may be charged under Nebraska's applicable law.

8.4.3. Undisputed amounts shall be paid within thirty (30) days of receipt of invoice from the Billing Party.

8.5. Upon termination or expiration of this Agreement in accordance with this section:

(a) Each Party shall comply immediately with its obligations as set forth in Section 8.2 above;

(b) Each Party shall promptly pay all amounts (including any late payment charges) owed under this Agreement;

(c) Each Party's indemnification obligations shall survive termination or expiration of this Agreement.

8.6. Either Party may terminate this Agreement in whole or in part in the event of a default of the other Party, provided, however, that the non-defaulting Party notifies the defaulting Party in writing of the alleged default and the defaulting Party does not implement mutually acceptable steps to remedy such alleged default within thirty (30) days after receipt of written notice thereof.

9.0 CANCELLATION CHARGES

Except as provided herein, no cancellation charges shall apply.

10.0 NON-SEVERABILITY

10.1. The services, arrangements, terms and conditions of this Agreement were mutually negotiated by the Parties as a total arrangement and are intended to be non-severable.

10.2. Nothing in this Agreement shall be construed as requiring or permitting either Party to contravene any mandatory requirement of federal or state law, or any regulations or orders adopted pursuant to such law.

11.0 INDEMNIFICATION

11.1. Each Party (the "Indemnifying Party") shall indemnify and hold harmless the other Party ("Indemnified Party") from and against loss, cost, claim, liability, damage, and expense (including reasonable attorney's fees) to End Users and other third parties for:

(a) damage to tangible personal property or for personal injury proximately caused by the negligence or willful misconduct of the Indemnifying Party, its employees, agents or contractors;

(b) claims for libel, slander, or infringement of copyright arising from the material transmitted over the Indemnified Party's facilities arising from the Indemnifying Party's own communications or the communications of such Indemnifying Party's End Users; and

(c) claims for infringement of patents arising from combining the Indemnified Party's facilities or services with, or the using of the Indemnified Party's services or facilities in connection with, facilities of the Indemnifying Party.

Notwithstanding this indemnification provision or any other provision in the Agreement, neither Party, nor its parents, subsidiaries, affiliates, agents, servants, or employees, shall be liable to the other for Consequential Damages (as defined in Section 12.3).

11.2. The Indemnified Party will notify the Indemnifying Party promptly in writing of any claims, lawsuits, or demands by End Users or other third parties for which the Indemnified Party alleges that the Indemnifying Party is responsible under this section, and, if requested by the Indemnifying Party, will tender the defense of such claim, lawsuit or demand in the event:

(a) The Indemnifying Party does not promptly assume or diligently pursue the defense of the tendered action, then the Indemnified Party may proceed to defend or settle said action and the Indemnifying Party shall hold harmless the Indemnified Party from any loss, cost liability, damage and expense.

(b) The Party otherwise entitled to indemnification from the other elects to decline such indemnification, then the Party making such an election may, at its own expense, assume defense and settlement of the claim, lawsuit or demand.

11.3. The Parties will cooperate in every reasonable manner with the defense or settlement of any claim, demand, or lawsuit.

11.4. Neither Party shall accept the terms of a settlement that involves or references the other Party in any matter without the other Party's approval.

12.0 LIMITATION OF LIABILITY

12.1. No liability shall attach to either Party, its parents, subsidiaries, affiliates, agents, servants, employees, officers, directors, or partners for damages arising from errors, mistakes, omissions, interruptions, or delays in the course of establishing, furnishing, rearranging, moving, terminating, changing, or providing or failing to provide services or facilities (including the obtaining or furnishing of information with respect thereof or with respect to users of the services or facilities) in the absence of gross negligence or willful misconduct.

12.2. Except as otherwise provided in Section 11.0, no Party shall be liable to the other Party for any loss, defect or equipment failure caused by the conduct of the first Party, its agents, servants, contractors or others acting in aid or concert with that Party, except in the case of gross negligence or willful misconduct.

12.3. Except as otherwise provided in Section 11.0, no Party shall have any liability whatsoever to the other Party for any indirect, special, consequential, incidental or punitive damages, including but not limited to loss of anticipated profits or revenue or other economic loss in connection with or arising from anything said, omitted or done hereunder (collectively, "Consequential Damages"), even if the other Party has been advised of the possibility of such damages.

13.0 DISCLAIMER

EXCEPT AS OTHERWISE PROVIDED HEREIN, NEITHER PARTY MAKES ANY REPRESENTATIONS OR WARRANTIES, EXPRESS OR IMPLIED, INCLUDING BUT NOT LIMITED TO ANY WARRANTY AS TO MERCHANTABILITY OR FITNESS FOR INTENDED OR PARTICULAR PURPOSE WITH RESPECT TO SERVICES PROVIDED HEREUNDER. ADDITIONALLY, NEITHER PARTY ASSUMES ANY RESPONSIBILITY WITH REGARD TO THE CORRECTNESS OF DATA OR INFORMATION SUPPLIED BY THE OTHER PARTY WHEN THIS DATA OR INFORMATION IS ACCESSED AND USED BY A THIRD-PARTY.

14.0 REGULATORY APPROVAL

The Parties understand and agree that this Agreement will be filed with the Commission. Each Party covenants and agrees to fully support approval of this Agreement by the Commission. The Parties, however, reserve the right to seek regulatory relief and otherwise seek redress from each other regarding performance and implementation of this Agreement. In the event the Commission rejects this Agreement in whole or in part, the Parties agree to meet and negotiate in good faith to arrive at a mutually acceptable modification of the rejected portion(s). Further, this Agreement is subject to change, modification, or cancellation as may be required by a regulatory authority or court in the exercise of its lawful jurisdiction.

The Parties agree that their entrance into this Agreement is without prejudice to any positions they may have taken previously, or may take in future, in any legislative,

regulatory, judicial or other public forum addressing any matters, including matters related to the same types of arrangements covered in this Agreement.

15.0 PENDING JUDICIAL APPEALS AND REGULATORY RECONSIDERATION

The Parties acknowledge that the respective rights and obligations of each Party as set forth in this Agreement are based on the text of the Act and the rules and regulations promulgated thereunder by the FCC and the Commission as of the Effective Date ("Applicable Rules"). In the event of any amendment to the Act, any effective legislative action or any effective regulatory or judicial order, rule, regulation, arbitration award, dispute resolution procedures under this Agreement or other legal action purporting to apply the provisions of the Act to the Parties or in which the FCC or the Commission makes a generic determination that is generally applicable which revises, modifies or reverses the Applicable Rules (individually and collectively, Amended Rules), either Party may, by providing written notice to the other Party, require that the affected provisions of this Agreement be renegotiated in good faith and this Agreement shall be amended accordingly to reflect the pricing, terms and conditions of each such Amended Rules relating to any of the provisions in this Agreement.

16.0 MOST FAVORED NATION PROVISION

Nothing in this Agreement shall alter or affect the rights of either Party pursuant to Section 252(i) of the Act.

17.0 MISCELLANEOUS

17.1. Authorization.

17.1.1. SENTCO is a corporation duly organized, validly existing and in good standing under the laws of the State of Nebraska and has full power and authority to execute and deliver this Agreement and to perform its obligations hereunder, subject to any necessary regulatory approval.

17.1.2. Sprint Communications, L.P. is a limited partnership duly organized, validly existing and in good standing under the laws of the state of Delaware, authorized to do business in the state of Nebraska and has full power and authority to execute and deliver this Agreement and to perform its obligations hereunder, subject to any necessary regulatory approval.

17.2. Compliance. Each Party shall comply with all applicable federal, state, and local laws, rules, and regulations applicable to its performance under this Agreement.

17.3. Independent Contractors. Neither this Agreement, nor any actions taken by Sprint or SENTCO in compliance with this Agreement, shall be deemed to create an agency or joint venture relationship between Sprint and SENTCO, or any relationship other than that of purchaser and seller of services. Neither this Agreement, nor any actions taken by Sprint or SENTCO in compliance with this Agreement, shall create a contractual, agency,

or any other type of relationship or third party liability between Sprint and SENTCO end users or others.

17.4. Force Majeure. Neither Party shall be liable for any delay or failure in performance of any part of this Agreement from any cause beyond its control and without its fault or negligence including, without limitation, acts of nature, acts of civil or military authority, government regulations, embargoes, epidemics, terrorist acts, riots, insurrections, fires, explosions, earthquakes, nuclear accidents, floods, work stoppages, equipment failure, power blackouts, volcanic action, other major environmental disturbances, unusually severe weather conditions or any other circumstances beyond the reasonable control and without the fault or negligence of the Party affected (collectively, a "Force Majeure Event"). If any Force Majeure condition occurs, the Party delayed or unable to perform shall give immediate notice to the other Party and shall take all reasonable steps to correct the force majeure condition. During the pendency of the Force Majeure, the duties of the Parties under this Agreement affected by the Force Majeure condition shall be abated and shall resume without liability thereafter.

17.5. Record Retention. During the Initial Term and any extended period that this Agreement is in effect, and within forty-five (45) days of a written request from either Party (the "Requesting Party"), the other Party (the "Providing Party") shall provide one complete month of all the call records associated with the traffic subject to Section 5.1, 5.2 and 5.4 (the "Test Month") that the Providing Party delivers to the Requesting Party through the Point of Interconnection ("POI") established under the Agreement; provided, however, that the Test Month selected shall not be older than 12 months from the date of the request. The call records shall conform to the then prevailing industry standard record format (or such other standard industry format as established from time to time). The first request in a given year of a Requesting Party for the call records of the Providing Party shall be provided to the Requesting Party at no charge. Any reasonable costs associated directly with additional requests in that same year for call records shall be borne by the Requesting Party, provided, however, that the Requesting Party is not required to pay such costs if it demonstrates that at least 30% of the traffic associated with those records falls outside of Section 5.1 of this Agreement. Each Party shall reasonably cooperate with the other in any investigation under this Section.

17.6. Confidentiality.

17.6.1. Any information such as specifications, drawings, sketches, business information, forecasts, models, samples, data, computer programs and other software and documentation of one Party (a Disclosing Party) that is furnished or made available or otherwise disclosed to the other Party or any of its employees, contractors, or agents (its "Representatives" and with a Party, a "Receiving Party") pursuant to this Agreement ("Proprietary Information") shall be deemed the property of the Disclosing Party. Proprietary Information, if written, shall be clearly and conspicuously marked "Confidential" or "Proprietary" or other similar notice, and, if oral or visual, shall be confirmed in writing as confidential by the Disclosing Party to the Receiving Party within ten (10) days after disclosure. Unless Proprietary Information was previously known by the

Receiving Party free of any obligation to keep it confidential, or has been or is subsequently made public by an act not attributable to the Receiving Party, or is explicitly agreed in writing not to be regarded as confidential, such information: (1) shall be held in confidence by each Receiving Party; (ii) shall be disclosed to only those persons who have a need for it in connection with the provision of services required to fulfill this Agreement and shall be used by those persons only for such purposes; and (iii) may be used for other purposes only upon such terms and conditions as may be mutually agreed to in advance of such use in writing by the Parties. Notwithstanding the foregoing sentence, a Receiving Party shall be entitled to disclose or provide Proprietary Information as required by any governmental authority or applicable law, upon advice of counsel, only in accordance with Section 17.6.2 of this Agreement.

17.6.2. If any Receiving Party is required by any governmental authority or by applicable law to disclose any Proprietary Information, then such Receiving Party shall provide the Disclosing Party with written notice of such requirement as soon as possible and prior to such disclosure. The Disclosing Party may then seek appropriate protective relief from all or part of such requirement. The Receiving Party shall use all commercially reasonable efforts to cooperate with the Disclosing Party in attempting to obtain any protective relief, which such Disclosing Party chooses to obtain.

17.6.3. In the event of the expiration or termination of this Agreement for any reason whatsoever, each Party shall return to the other Party or destroy all Proprietary Information and other documents, work papers and other material (including all copies thereof) obtained from the other Party in connection with this Agreement and shall use all reasonable efforts, including instructing its employees and others who have had access to such information, to keep confidential and not to use any such information, unless such information is now, or is hereafter disclosed, through no act, omission or fault of such Party, in any manner making it available to the general public.

17.7. Governing Law. For all claims under this Agreement that are based upon issues within the jurisdiction (primary or otherwise) of the FCC, the exclusive jurisdiction and remedy for all such claims shall be as provided for by the FCC and the Act. For all claims under this Agreement that are based upon issues within the jurisdiction (primary or otherwise) of the Commission, the exclusive jurisdiction for all such claims shall be with the Commission, and the exclusive remedy for such claims shall be as provided for by such Commission. In all other respects, this Agreement shall be governed by the domestic laws of the State of Nebraska without reference to conflict of law provisions.

The terms and conditions of this Agreement shall be subject to any and all applicable laws, rules, regulations or guidelines that subsequently may be adopted by any federal, state, or local government authority. Any modifications to this Agreement occasioned by such change shall be effected through good faith negotiations.

17.8. Taxes. Each Party purchasing services hereunder shall pay or otherwise be

responsible for all federal, state, or local sales, use, excise, gross receipts, transaction or similar taxes, fees or surcharges levied against or upon such purchasing Party (or the providing Party when such providing Party is permitted to pass along to the purchasing Party such taxes, fees or surcharges), except for any tax on either Party's corporate existence, status or income. Whenever possible, these amounts shall be billed as a separate item on the invoice. To the extent a sale is claimed to be for resale tax exemption, the purchasing Party shall furnish the providing Party a proper resale tax exemption certificate as authorized or required by statute or regulation by the jurisdiction providing said resale tax exemption. Failure to timely provide such sale for resale tax exemption certificate will result in no exemption being available to the purchasing Party.

17.9. Assignment. This Agreement shall be binding upon the Parties and shall continue to be binding upon all such entities regardless of any subsequent change in their ownership. Each Party covenants that, if it sells or otherwise transfers to a third party, unless the Party which is not the subject of the sale or transfer reasonably determines that the legal structure of the transfer vitiates any such need, it will require as a condition of such transfer that the transferee agree to be bound by this Agreement with respect to services provided over the transferred facilities. Except as provided in this paragraph, neither Party may assign or transfer (whether by operation of law or otherwise) this Agreement (or any rights or obligations hereunder) to a third party without the prior written consent of the other Party which consent will not be unreasonably withheld; provided that either Party may assign this Agreement to a corporate Affiliate or an entity under its common control or an entity acquiring all or substantially all of its assets or equity by providing prior written notice to the other Party of such assignment or transfer. Any attempted assignment or transfer that is not permitted is void ab initio. Without limiting the generality of the foregoing, this Agreement shall be binding upon and shall inure to the benefit of the Parties' respective successors and assigns.

17.10. Non-Waiver. Failure of either Party to insist on performance of any term or condition of this Agreement or to exercise any right or privilege hereunder shall not be construed as a continuing or future waiver of such term, condition, right or privilege.

17.11. Notices.

17.11.1. Notices given by one Party to the other Party under this Agreement shall be in writing and shall be: (i) delivered personally; (ii) delivered by express delivery service; (iii) mailed, certified mail, return receipt requested to the following addresses of the Parties:

Sprint:
Sprint Communications, L.P.
6450 Sprint Parkway
Overland Park, Kansas 66251
Attn: Director, Wholesale and
Interconnection Management
Phone Number: 913-315-9081

SENTCO:
Southeast Nebraska Telephone Co.
110 West 17th Street
Falls City, NE 68355
Attn: Elizabeth A Sickel, VP/Gen. Mgr
Phone Number: 402-245-4451
Fax Number: 402-245-4770

With a copy to:
Paul M. Schudel
Woods & Aitken, LLP
301 South 13th Street, Suite 500
Lincoln, Nebraska 68508
Phone Number: 402-437-8500
Fax Number: 402-437-8558

Or to such other address as either Party shall designate by proper notice. Notices will be deemed given as of the earlier of: (i) the date of actual receipt; (ii) the next business day when notice is sent via express mail or personal delivery; (iii) three (3) days after mailing in the case of certified U.S. mail.

17.11.2. In order to facilitate trouble reporting and to coordinate the repair of Interconnection Facilities, trunks, and other interconnection arrangements provided by the Parties under this Agreement, each Party has established contact(s) available 24 hours per day, seven days per week, at telephone numbers to be provided by the Parties. Each Party shall call the other at these respective telephone numbers to report trouble with connection facilities, trunks, and other interconnection arrangements, to inquire as to the status of trouble ticket numbers in progress, and to escalate trouble resolution.

24-Hour Network Management Contact:

For SENTCO:
NOC/Repair Contact Number: 402-245-4451 (Mon.-Fri. 8-5);
After Hours: 402-245-4905 or 402-245-2728 or 402-245-4577
Facsimile Number: 402-245-4770

For Sprint:
NOC/Repair Contact Number: 1-888-862-8293

Before either Peports a trouble condition, it must first use its reasonable efforts to isolate the trouble to the other Party's facilities, service, and arrangements. Each Party will advise the other of any critical nature of the inoperative facilities, service, and arrangements and any need for expedited clearance of trouble. In cases where a Party has indicated the essential or critical need for restoration of the facilities, services or arrangements, the other Party shall use its best efforts to expedite the clearance of trouble.

17.12. Publicity and Use of Trademarks or Service Marks. Neither Party nor its subcontractors or agents shall use the other Party's trademarks, service marks, logos or other proprietary trade dress in any advertising, press releases, publicity matters or other promotional materials without such Party's prior written consent.

17.13. Joint Work Product. This Agreement is the joint work product of the Parties and has been negotiated by the Parties and their respective counsel and shall be fairly

interpreted in accordance with its terms. In the event of any ambiguities, no inferences shall be drawn against either Party.

17.14. No Third Party Beneficiaries; Disclaimer of Agency. This Agreement is for the sole benefit of the Parties and their permitted assigns, and nothing herein expressed or implied shall create or be construed to create any third-party beneficiary rights hereunder. Except for provisions herein expressly authorizing a Party to act for another, nothing in this Agreement shall constitute a Party as a legal representative or agent of the other Party; nor shall a Party have the right or authority to assume, create or incur any liability or any obligation of any kind, express or implied, against, in the name of, or on behalf of the other Party, unless otherwise expressly permitted by such other Party. Except as otherwise expressly provided in this Agreement, no Party undertakes to perform any obligation of the other Party, whether regulatory or contractual, or to assume any responsibility for the management of the other Party's business.

17.15. No License. No license under patents, copyrights, or any other intellectual property right (other than the limited license to use consistent with the terms, conditions and restrictions of this Agreement) is granted by either Party, or shall be implied or arise by estoppel with respect to any transactions contemplated under this Agreement.

17.16. Technology Upgrades. Nothing in this Agreement shall limit either Parties' ability to upgrade its network through the incorporation of new equipment, new software or otherwise, provided it is to industry standards, and that the Party initiating the update shall provide the other Party written notice at least ninety (90) days prior to the incorporation of any such upgrade in its network which will materially impact the other Party's service. Each Party shall be solely responsible for the cost and effort of accommodating such changes in its own network.

17.17. Entire Agreement. The terms contained in this Agreement and any Schedules, Exhibits, tariffs and other documents or instruments referred to herein are hereby incorporated into this Agreement by reference as if set forth fully herein, and constitute the entire agreement between the Parties with respect to the subject matter hereof, superseding all prior understandings, proposals and other communications, oral or written. Neither Party shall be bound by any preprinted terms additional to or different from those in this Agreement that may appear subsequently in the other Party's form documents, purchase orders, quotations, acknowledgments, invoices or other communications. This Agreement may only be modified by a writing signed by an officer of each Party.

18.0 DISPUTE RESOLUTION

Except as provided under Section 252 of the Act with respect to the approval of this Agreement by the State Commission, the Parties desire to resolve disputes arising out of or relating to this Agreement without litigation. Accordingly, except for action seeking a temporary restraining order or an injunction related to the purposes of this Agreement, or suit to compel compliance with this dispute resolution process, the Parties

agree to use the following dispute resolution procedures with respect to any controversy or claim arising out of or relating to this Agreement or its breach.

18.1. Informal Resolution of Disputes. At the written request of a Party, each Party will appoint a knowledgeable, responsible representative, empowered to resolve such dispute, to meet and negotiate in good faith to resolve any dispute arising out of or relating to this Agreement. The Parties intend that these negotiations be conducted by non-lawyer, business representatives. The location, format, frequency, duration, and conclusion of these discussions shall be left to the discretion of the representatives. Upon agreement, the representatives may utilize other alternative dispute resolution procedures such as mediation to assist in the negotiations. Discussions and correspondence among the representatives for purposes of these negotiations shall be treated as Confidential Information developed for purposes of settlement, exempt from discovery, and shall not be admissible in the arbitration described below or in any lawsuit without the concurrence of all Parties. Documents identified in or provided with such communications, which are not prepared for purposes of the negotiations, are not so exempted and my, if otherwise discoverable, be discovered or otherwise admissible, be admitted in evidence, in the arbitration or lawsuit.

18.2. Formal Dispute Resolution. If negotiations pursuant to Section 18.1 fail to produce an agreeable resolution within ninety (90) days, then either Party may proceed with any remedy available to it pursuant to law, equity or agency mechanisms; provided, that upon mutual agreement of the Parties such disputes may also be submitted to binding arbitration. In the case of an arbitration, each Party shall bear its own costs. The Parties shall equally split the fees of any mutually agreed upon arbitration procedure and the associated arbitrator.

18.3. Continuous Service. The Parties shall continue providing services to each other during the pendency of any dispute resolution procedure, and the Parties shall continue to perform their payment obligations (including making payments in accordance with Section 4, 5, and 6) in accordance with this Agreement.

IN WITNESS WHEREOF, the Parties hereto have caused this Agreement to be executed as of the dates listed below.

Sprint Communications, L.P.	Southeast Nebraska Telephone Company
By:_____	By:_____
Name: _____	Name: _____
Title: _____	Title: _____
Date: _____	Date: _____

0034

Nebraska Public Service Commission

COMMISSIONERS:
ANNE C. BOYLE
L C. JOHNSON
JOHNSON
FRANK E. LANDIS
GERALD L. VAP

EXECUTIVE DIRECTOR:
ANDY S. POLLOCK

300 The Atrium, 1200 N Street, Lincoln, NE 68508
Post Office Box 94927, Lincoln, NE 68509-4927
Website: www.psc.state.ne.us
Phone: (402) 471-3101
Fax: (402) 471-0254

NEBRASKA CONSUMER HOTLINE:
1-800-526-0017

May 26, 2005

CERTIFIED MAIL

Diane C. Browning
6450 Sprint Parkway
Mailstop KSOPHN0212-2A511
Overland Park, KS 66251

LETTER OF NOTIFICATION

RE: Docket No. C-3429 In the Matter of Sprint Communications Company L.P. (Sprint), Overland, Kansas, petition for arbitration under the Telecommunications Act, of certain issues associated with the proposed interconnection agreement between Sprint and Southeast Nebraska Telephone Company.

Dear Ms.Browning:

Receipt is hereby acknowledged of the application of Sprint Communications Company L.P., Overland, Kansas, petition for arbitration under the Telecommunications Act

On May 23, 2005, this application was docketed under Docket No. C-3429 and will receive the prompt attention of this Commission. Pursuant to Commission policy, the parties have fifteen (15) days in which to select an arbitrator and advise the Commission of the selection, being June 10, 2005, as calculated by Commission Rules of Procedure. Parties are not bound to select an arbitrator from the Commission's list.

Please note that the Commission rules require that, if the applicant is represented by legal counsel at a hearing on this application, that counsel must be admitted to practice in Nebraska or be accompanied by local Nebraska counsel.

Sincerely,

Maurice Gene Hand
Communications Director

0035

MGH:dk

pc: Bradford E. Kistler, Kinsey RIdenouer Becker & Kistler, LLP, 601 Lincoln Square, 121 S. 13th St. Lincoln, NE 68501
Elizabeth A. Sickel, Southeast Nebraska Telephone Co., 110 W. 17th St., Falls City, NE 68355
Paul M. Schudel, Woods & Aiken, LLP, 301 S. 13th St., Ste. 500, Lincoln, NE 68508
*Henry Cordes, Omaha World Herald, World Herald Square, 14th & Dodge, Omaha, NE 68101
*Nancy Hicks, Journal Star, 9th & P Streets, Lincoln, NE 68508
*Mark Andersen, Journal Star, 9th & P Streets, Lincoln, NE 68508
*Michelle Hrbek, KOLN/KGIN, 40th & W Streets, P.O. Box 30350, Lincoln, NE 68503

Printed with soy ink on recycled paper

BEFORE THE NEBRASKA PUBLIC SERVICE COMMISSION

IN RE:	)	
	)	
SPRINT COMMUNICATIONS	)	
COMPANY L.P. PETITION FOR	)	**APPLICATION NO. C-3429**
ARBITRATION UNDER THE	)	
TELECOMMUNICATIONS ACT	)	

MOTION FOR COMMISSION TO ACT AS ARBITRATOR

Southeast Nebraska Telephone Company ("SENTCO"), the Respondent in this docket to the Petition for Arbitration filed in this matter by Sprint Communications Company L.P. ("Sprint") respectfully submits this Motion for the Commission to act as arbitrator of the issues presented in this docket. In support of this Motion, SENTCO states as follows:

1. As a result of extensive negotiations between representatives of Sprint and SENTCO, the parties have resolved all issues relating to the Interconnection and Reciprocal Compensation Agreement, a copy of which is attached to the Petition for Arbitration as Exhibit B (the "ICA"), with the exception of the two issues identified by Sprint in the Petition.

2. Although identified as two separate issues, in reality, both issues so identified rest on the common legal issue as to whether the ICA may be utilized by Sprint in connection with Sprint's provision of so-called "enabler services" to third party telecommunications carriers that are not parties to the ICA.

3. SENTCO believes that resolution of this common legal issue will be based on readily available facts and clear legal principles. In the event that an evidentiary hearing is required, SENTCO expects that such hearing will be of short duration,

RECEIVED
MAY 3 1 2005
NEBRASKA PUBLIC SERVICE COMMISSION

particularly if the parties are able to stipulate to substantially all of the facts that will be relevant to the resolution of the common legal issue in this docket.

4. Although SENTCO is not making a showing of "financial hardship" pursuant to paragraph 2 of the Commission's Arbitration Policy approved by Order dated August 19, 2003 and entered in Application No. C-1128 (the "Arbitration Policy"), SENTCO is requesting that the Commission enter its order herein determining that the Commission will act as the arbitrator in this matter as would be allowed in a case of "financial hardship" in accordance with paragraph 2 of the Arbitration Policy.

5. SENTCO submits that a decision by the Commission to act as the arbitrator would conserve the resources of the parties by eliminating the step of separate presentation of the issues in this docket to a Commission-appointed arbitrator, would not impose a burden on the Commission because the interconnection agreement approved by a third party arbitrator must be submitted to the Commission for review and approval pursuant to paragraphs 12 through 14 of the Arbitration Policy and as required by 47 U.S.C. § 252(b)(4)(C), and is appropriate due to the essential legal nature of the issues involved in this matter.

6. Moreover, in light of its actions in certifying Time Warner Cable Information Services LLC d/b/a Time Warner Cable and Sprint in Application No. 3228 and Application No. 3204, respectively, the Commission is well versed with the underlying proposed operations of Sprint. This fact, in turn, should permit additional efficiencies for all parties in this proceeding, as the Commission's experience will eliminate the "learning curve" necessarily required of any independent third party arbitrator.

WHEREFORE, SENTCO respectfully requests that the Commission enter its order herein determining that the Commission will act as the arbitrator in this matter.

REQUEST FOR ORAL ARGUMENT

In the event that Sprint does not join in this Motion, SENTCO respectfully request oral argument to more fully explain the rationale for the request set forth in this Motion.

Dated this 31st day of May, 2005.

SOUTHEAST NEBRASKA TELEPHONE COMPANY

By: Paul M. Schudel

Paul M. Schudel, #13723
James A. Overcash, #18627
WOODS & AITKEN LLP
301 South 13th Street, Suite 500
Lincoln, Nebraska 68508
(402) 437-8500

and

Thomas J. Moorman, D.C. Bar No. 384790
KRASKIN, MOORMAN & COSSON, LLC
2120 L Street, N.W., Suite 520
Washington, D.C. 20037
(202) 296-8890
Its Attorneys

CERTIFICATE OF SERVICE

The undersigned hereby certifies that a true and correct copy of the foregoing pleading has been served by hand delivery upon Gene Hand, Director of Telecommunications, and upon Shana Knutson, Staff Attorney, 300 The Atrium, 1200 N Street, Lincoln, NE 68508 and by United States Mail upon Sprint Communications Company L.P.'s attorney, Diane C. Browning, 6450 Sprint Parkway, Mailstop KSOPHN0212-2A511, Overland Park, KS 66251 on this 31st day of May, 2005.

Paul M. Schudel

Paul M. Schudel

0038

Nebraska Public Service Commission

COMMISSIONERS:
C. BOYLE
L C. JOHNSON
J JOHNSON
FRANK E. LANDIS
GERALD L. VAP

EXECUTIVE DIRECTOR:
ANDY S. POLLOCK

300 The Atrium, 1200 N Street, Lincoln, NE 68508
Post Office Box 94927, Lincoln, NE 68509-4927
Website: www.psc.state.ne.us
Phone: (402) 471-3101
Fax: (402) 471-0254

NEBRASKA CONSUMER HOTLINE:
1-800-526-0017

June 2, 2005

CERTIFICATION

To Whom It May Concern:

I, Andy S. Pollock, Executive Director of the Nebraska Public Service Commission, hereby certify that the enclosed is a true and correct copy of the original order made and entered in C-3429 on the 1st day of June 2005. The original order is filed and recorded in the official records of the Commission.

IN TESTIMONY WHEREOF, I have hereunto set my hand and affixed the Seal of the Nebraska Public Service Commission, Lincoln, Nebraska, this 1st day of June 2005.

Sincerely,

Andy S. Pollock
Executive Director

ASP:dk

Enclosure

cc: Diane C. Browning, 6450 Sprint Parkway, Mailstop KSOPHN0212-2A511, Overland Park, KS 66251
Bradford E. Kistler, Kinsey RIdenouer Becker & Kistler, LLP, 601 Lincoln Square, 121 S. 13th St. Lincoln, NE 68501
Elizabeth A. Sickel, Southeast Nebraska Telephone Co., 110 W. 17th St., Falls City, NE 68355
Paul M. Schudel, Woods & Aiken, LLP, 301 S. 13th St., Ste. 500, Lincoln, NE 68508

Printed with soy ink on recycled paper

BEFORE THE NEBRASKA PUBLIC SERVICE COMMISSION

In the Matter of the Application of Sprint Communications Company L.P. (Sprint), Overland, Kansas, petition for arbitration under the Telecommunications Act, of certain issues associated with the proposed interconnection agreement between Sprint and Southeast Nebraska Telephone Company.	)	Application No. C-3429 ORDER SETTING ORAL ARGUMENT Entered: June 1, 2005

BY THE HEARING OFFICER:

O P I N I O N A N D F I N D I N G S

This matter comes before the Commission on the Motion for Commission to Act as Arbitrator ("Motion") filed on May 31, 2005 by counsel for Southeast Nebraska Telephone Company (SENTCO). SENTCO, although not making a showing of financial hardship, requested the Commission act as Arbitrator because it believes the Commission is already well-acquainted with the issues being arbitrated. A request for oral argument was made. Accordingly, the Hearing Officer sets this motion for argument on June 7, 2005 at 11:00 a.m. in the Commission Hearing Room, 300 The Atrium, 1200 N Street, Lincoln, Nebraska 68508. A call-in number will be established for out-of-town counsel.

O R D E R

IT IS THEREFORE ORDERED by the Hearing Officer in this matter that oral argument be set on the Motion for Commission to Act as Arbitrator on June 7, 2005 at 11:00 a.m. in the Commission Hearing Room, 300 The Atrium Building, 1200 N Street, Lincoln, Nebraska 68508.

MADE AND ENTERED at Lincoln, Nebraska this 1st day of June, 2005.

NEBRASKA PUBLIC SERVICE COMMISSION

By: _____
Hearing Officer

Printed with soy ink on recycled paper

STATE OF NEBRASKA
PUBLIC SERVICE COMMISSION

IN RE:	)	
	)	**DOCKET NO. C-3429**
SPRINT COMMUNICATIONS COMPANY L.P.	)	
PETITION FOR ARBITRATION UNDER THE	)	
TELECOMMUNICATIONS ACT	)	
	)	

SPRINT'S RESPONSE TO SENTCO'S MOTION FOR COMMISSION TO ACT AS ARBITRATOR

Sprint Communications Company L. P. ("Sprint"), the Petitioner in the above-referenced proceeding, files this Response to Motion for Commission to Act as Arbitrator filed by Southeast Nebraska Telephone Company ("Sentco") on May 31, 2005. In support of its Response, Sprint states as follows:

1. While Sprint has no objection if the Commission decides to act as the arbitrator in the above-referenced proceeding, Sprint does not join in Sentco's Motion.

2. Sprint believes the Commission's arbitration policy under Docket No. C-1128, Progression Order No. 3 dated August 19, 2003 (the "Arbitration Policy") establishes fair and reasonable procedures for the arbitration of disputes under §252 of the Telecommunications Act. Sprint is willing to comply with the Arbitration Policy.

3. The Arbitration Policy does not contemplate the Commission acting as arbitrator except in the case of a showing of "financial hardship." Sentco's motion does not include any showing of financial hardship.

4. While the Commission certainly has authority over its Arbitration Policy and can decide to act as the arbitrator if it wishes, it is not clear to Sprint that a compelling reason exists for the Commission to do so.

JUN - 6 2005

5. Sprint disagrees with Sentco's contention that an evidentiary hearing on the issue in this case will necessarily be short and simple. Certainly the Commission is familiar with Sprint's proposed business arrangement with Time Warner as a result of both Time Warner's and Sprint's CLEC certification proceedings in Docket Nos. C-3228 and C-3204, respectively. However, the matters in dispute in the instant arbitration proceeding relate to a different issue, i.e. to Sprint's entitlement to interconnection under §251 of the Telecommunications Act. This is an entirely separate issue from the issues in the earlier proceedings regarding eligibility for certification as a CLEC. Sprint anticipates that it will introduce additional evidence to support Sprint's position as set forth in the arbitration petition. As a result, Sprint disagrees with Sentco's view that the parties are likely to stipulate to all the relevant facts. As a result, acting as the arbitrator could impose a burden on the Commission that the Commission would normally avoid by using an outside arbitrator.

6. As stated above, Sprint has no objection if the Commission decides to act as the arbitrator in this proceeding. However, Sprint submits this Response to inform the Commission that Sprint expects the evidentiary hearing in this proceeding will include the introduction of additional evidence above and beyond the facts with which the Commission is already familiar.

WHEREFORE, Sprint respectfully requests that the Commission enter its order herein denying Sentco's Motion.

Respectfully submitted on this 3rd day of June, 2005,

SPRINT COMMUNICATIONS COMPANY L.P.

By: Diane Browning

Diane C. Browning
6450 Sprint Parkway
Mailstop KSOPHN0212-2A511
Overland Park, KS 66251
Voice: 913-315-9284
Fax: 913-523-0571
diane.c.browning@mail.sprint.com

CERTIFICATE OF SERVICE

The undersigned hereby certifies tat a true and correct copy of the foregoing was served this 3rd day of June, 2005, via overnight mail or first class mail, postage prepaid, to the following:

Elizabeth A. Sickel
Southeast Nebraska Telephone Co.
110 W. 17th St.
Falls City, NE 68355

Paul M. Schudel
Woods & Aiken, LLP
301 S. 13th St., Suite 500
Lincoln, NE 68508

Gene Hand
Director of Telecommunications
Nebraska Public Service Commission
300 The Atrium
1200 N Street
Lincoln, NE 68508

Shana Knutson
Staff Attorney
Nebraska Public Service Commission
300 The Atrium
1200 N Street
Lincoln, NE 68508

Diane Browning
Diane C. Browning

0043

Nebraska Public Service Commission

MMISSIONERS:
E C. BOYLE
WELL C. JOHNSON
ROD JOHNSON
FRANK E. LANDIS
GERALD L. VAP

EXECUTIVE DIRECTOR:
ANDY S. POLLOCK

300 The Atrium, 1200 N Street, Lincoln, NE 68508
Post Office Box 94927, Lincoln, NE 68509-4927
Website: www.psc.state.ne.us
Phone: (402) 471-3101
Fax: (402) 471-0254

NEBRASKA CONSUMER HOTLINE:
1-800-526-0017

June 15, 2005

CERTIFICATION

To Whom It May Concern:

I, Andy S. Pollock, Executive Director of the Nebraska Public Service Commission, hereby certify that the enclosed is a true and correct copy of the original order made and entered in C-3429 on the 14th day of June 2005. The original order is filed and recorded in the official records of the Commission.

IN TESTIMONY WHEREOF, I have hereunto set my hand and affixed the Seal of the Nebraska Public Service Commission, Lincoln, Nebraska, this 14th day of June 2005.

Sincerely,

Andy S. Pollock
Executive Director

ASP:dk

Enclosure

cc: Diane C. Browning, 6450 Sprint Parkway, Mailstop KSOPHN0212-2A511, Overland Park, KS 66251
Bradford E. Kistler, Kinsey RIdenouer Becker & Kistler, LLP, 601 Lincoln Square, 121 S. 13th St. Lincoln, NE 68501
Elizabeth A. Sickel, Southeast Nebraska Telephone Co., 110 W. 17th St., Falls City, NE 68355
Paul M. Schudel, Woods & Aiken, LLP, 301 S. 13th St., Ste. 500, Lincoln, NE 68508

Printed with soy ink on recycled paper

BEFORE THE NEBRASKA PUBLIC SERVICE COMMISSION

In the Matter of Sprint Communications Company L.P., Overland Park, Kansas, Petition for arbitration under the Telecommunications Act, of certain issues associated with the proposed interconnection agreement between Sprint and Southeast Nebraska Telephone Company, Falls City.	)	Application No. C-3429 MOTION GRANTED Entered: June 14, 2005

BY THE COMMISSION:

0045

O P I N I O N A N D F I N D I N G S

This matter comes before the Commission on the Motion of James Overcash, counsel for Southeast Nebraska Telephone Company (SENTCO), Falls City, filed on May 31, 2005, requesting the Commission act as the Arbitrator in this Petition. Oral argument was held on June 7, 2005. Appearing for the movant was James Overcash. Brad Kistler and Diane Browning appeared for the Petitioner, Sprint. The Hearing Officer granted Mr. Kistler's request to move Ms. Browning's admittance to practice before the Commission in this proceeding.

At the oral argument, Mr. Overcash argued the Commission should eliminate a step in this proceeding by acting as the Arbitrator. Mr. Overcash argued the Commission was familiar with the disputed issues as it has previously been faced with them in Sprint's application for competitive local exchange authority. Further, Mr. Overcash argued that arbitrating this case would not be a burden on the Commission.

Ms. Browning disagreed with the arguments presented by Mr. Overcash. She stated the issues are different from those previously determined by the Commission and the case is more complex than what SENTCO portrays. She stated there would be factual disputes as well as questions of law for the Commission to determine. However, Ms. Browning stated Sprint does not object to the Commission acting as Arbitrator.

The Commission's Mediation and Arbitration policy provides that in cases of financial hardship, the parties have seven days to file a motion requesting the Commission act as arbitrator.[1]

[1] Application No. C-1128, Progression Order No. 3, *In the Matter of the Commission on its own motion, to set guidelines for Mediation, Arbitration, and Reviews of Negotiated Agreements under the Telecommunications Act of*

Printed with soy ink on recycled paper

The showing of financial hardship appears to be a condition precedent to having the Commission act as Arbitrator. However, based on the arguments presented, the Commission finds it may be appropriate to act as Arbitrator as in this case. The Commission finds that acting as Arbitrator may be more efficient and less costly for the parties as the Commission is at least tangentially familiar with the issues presented. Further, as neither party objects to the Motion to Designate the Commission as the Arbitrator, the Commission finds no cause to deny said motion. Accordingly, the Motion is granted.

O R D E R

IT IS THEREFORE ORDERED by the Nebraska Public Service Commission that the Motion to Designate the Commission as Arbitrator should be and it is hereby granted.

IT IS FURTHER ORDERED that a planning conference be set at the earliest practical date to set a case progression schedule.

MADE AND ENTERED at Lincoln, Nebraska this 14th day of June, 2005.

NEBRASKA PUBLIC SERVICE COMMISSION

COMMISSIONERS CONCURRING:

//s// Frank E. Landis
//s// Gerald L. Vap

Chairman

ATTEST:

Executive Director

1996, Order Adopting Proposed Amendments to the Mediation and Arbitration Policy (August 19, 2003).

Printed with soy ink on recycled paper

Nebraska Public Service Commission

COMMISSIONERS:
C. BOYLE
CLARK C. JOHNSON
ROD JOHNSON
FRANK E. LANDIS
GERALD L. VAP

EXECUTIVE DIRECTOR:
ANDY S. POLLOCK

300 The Atrium, 1200 N Street, Lincoln, NE 68508
Post Office Box 94927, Lincoln, NE 68509-4927
Website: www.psc.state.ne.us
Phone: (402) 471-3101
Fax: (402) 471-0254

NEBRASKA CONSUMER HOTLINE:
1-800-526-0017

June 15, 2005

CERTIFICATION

To Whom It May Concern:

I, Andy S. Pollock, Executive Director of the Nebraska Public Service Commission, hereby certify that the enclosed is a true and correct copy of the original order made and entered in C-3429 on the 15th day of June, 2005. The original order is filed and recorded in the official records of the Commission.

IN TESTIMONY WHEREOF, I have hereunto set my hand and affixed the Seal of the Nebraska Public Service Commission, Lincoln, Nebraska, this 15th day of June, 2005.

Sincerely,

Andy S. Pollock
Executive Director

ASP:ab

Enclosure

cc: Diane C. Browning, 6450 Sprint Parkway, Mailstop KSOPHN0212-2A511, Overland Park, KS 66251
Bradford E. Kistler, Kinsey Ridenouer Becker & Kistler, LLP, 601 Lincoln Square, 121 S. 13th St. Lincoln, NE 68501
Elizabeth A. Sickel, Southeast Nebraska Telephone Co., 110 W. 17th St., Falls City, NE 68355
Paul M. Schudel, Woods & Aiken, LLP, 301 S. 13th St., Ste. 500, Lincoln, NE 68508

Printed with soy ink on recycled paper

BEFORE THE NEBRASKA PUBLIC SERVICE COMMISSION

In the Matter of Sprint Communications Company L.P., Overland Park, Kansas, Petition for Arbitration under the Telecommunications Act, of certain issues associated with the proposed interconnection agreement between Sprint and Southeast Nebraska Telephone Company, Falls City.	)	Application No. C-3429 ORDER SETTING PREHEARING CONFERENCE Entered: June 15, 2005

BY THE HEARING OFFICER:

By Petition filed May 23, 2005, Sprint Communications Company L.P. Overland Park, Kansas, seeks arbitration under the Telecommunications Act, of certain issues associated with the proposed interconnection agreement between Sprint and Southeast Nebraska Telephone Company, Falls City. On June 14, 2005, the Commission granted SENTCO's request to act as the arbitrator in this case. As Hearing Officer, I hereby schedule a planning conference for June 22, 2005 at 2:00 p.m. in the Commission Library to determine a case progression schedule.

O R D E R

IT IS THEREFORE ORDERED by the Hearing Officer that a planning conference be held on June 22, 2005 at 2:00 p.m. in the Commission Library.

MADE AND ENTERED at Lincoln, Nebraska this 15th day of June, 2005.

NEBRASKA PUBLIC SERVICE COMMISSION

By: Frank Landis Jr.
Hearing Officer

Printed with soy ink on recycled paper

BEFORE THE NEBRASKA PUBLIC SERVICE COMMISSION

IN RE:	)	
	)	
SPRINT COMMUNICATIONS	)	
COMPANY L.P. PETITION FOR	)	**APPLICATION NO. C-3429**
ARBITRATION UNDER THE	)	
TELECOMMUNICATIONS ACT	)	

MOTION TO DISMISS OR, IN THE ALTERNATIVE, RESPONSE OF SOUTHEAST NEBRASKA TELEPHONE COMPANY TO PETITION FOR ARBITRATION

Southeast Nebraska Telephone Company ("SENTCO") hereby files this Motion to Dismiss or, in the Alternative, Response to the Petition of Sprint Communications Company L.P. ("Sprint") for resolution of issues relating to an interconnection agreement under the terms of Section 251(b) of the Communications Act of 1934, as amended (the "Act").

1. On May 23, 2005, Sprint filed a petition (the "Petition") with the Nebraska Public Service Commission ("Commission") to arbitrate issues remaining unresolved after negotiations for an interconnection agreement between Sprint and SENTCO pursuant to Section 252 of the 1996 revisions to the Act. *See* Pub. L. No. 104-104, 110 Stat. 56 (1996) (codified at 47 U.S.C. § 151, *et seq.*).

2. SENTCO is an incumbent local exchange carrier ("ILEC") and is a Nebraska corporation authorized by the Commission to provide local exchange service in Nebraska. The contact information concerning SENTCO set forth in the Petition under the heading "Parties" is accurate. The telephone number for Ms. Sickel is 402-245-4451 and the telephone number for Mr. Schudel, lead counsel for SENTCO, is 402-437-8500. Additional contact information for SENTCO's counsel is provided below.

RECEIVED
JUN 17 2005
NEBRASKA PUBLIC SERVICE COMMISSION

3. SENTCO is filing this Motion to Dismiss (the "Motion") or, in the alternative, Response to Sprint's Petition (the "Response") in an effort to ensure the most efficient utilization of the resources of the Commission and the parties in this proceeding. With respect to the portion of this filing labeled as "Response," SENTCO notes that it is being filed voluntarily pursuant to 47 U.S.C. § 252(b)(3). In the event that the Motion is not granted, SENTCO wishes to set forth its position on certain matters relating to the issues in this arbitration while reserving all rights to (and without waiver of its rights with respect to) the matters raised in the Motion. As such, nothing in the Response section of this filing can or should be construed as an admission or in conflict with the basis provided below as to why the Petition should be dismissed in its entirety.

I. JURISDICTION

4. For the reasons stated below, the Commission should dismiss the Petition in its entirety. Sprint does not possess the status of "telecommunications carrier" and thus cannot assert rights under Section 251(b) for the interconnection arrangements it seeks when Sprint acts as an enabler/vendor for a third party, the only of which identified by Sprint being Time Warner Cable ("TWC").[1] *See* 47 U.S.C. §252(a)(1); *see also* Petition at 3-4.[2] Sprint has alleged no fact in its Petition to support its contention that it possesses the status of a "telecommunications carrier" when it complies with its private contractual obligations to TWC. Quite to the contrary, Sprint admits facts that demonstrate it is not a telecommunications carrier. Sprint admits that it has a private

---

[1] SENTCO notes that Sprint references "Time Warner Cable." SENTCO presumes that this reference is to Time Warner Cable Information Services, LLC d/b/a Time Warner Cable, an entity that the Commission has certified as a local exchange carrier in Application No. C-3228 on November 23, 2004.

[2] While SENTCO agreed to voluntary negotiations with Sprint, SENTCO did not agree to negotiate arrangements "without regard to the standards set forth in subsection[ ] (b) . . .of Section 251." 47 U.S.C. §252(a)(1). See Attachment A.

agreement with TWC which was individually negotiated with TWC. Moreover, Sprint admits that it will not be the ultimate provider of end user services to any retail business or residential customer physically located in SENTCO's Fall City exchange. Accordingly, the Commission should dismiss the Petition in its entirety because Sprint is not a telecommunications carrier.

5. Even if Sprint were a telecommunications carrier (a finding that is entirely at odds with Sprint's admissions), the Petition should still be dismissed. Sprint has not demonstrated nor even alleged any fact within the Petition that it will provide retail end user services to customers within the SENTCO's Falls City exchange. The agreement at issue (*see* Petition, Exhibit 2) is to establish a reciprocal compensation arrangement pursuant to Section 251(b)(5) of the Act between the parties for the exchange of specifically identified end user traffic. Section 251(b)(5) arrangements are limited to telecommunications carriers with networks that "originate" the local traffic subject to Section 251(b)(5). Sprint cannot assert any Section 251(b) rights in this proceeding because, as Sprint admits, only TWC's network will "originate" end user traffic in SENTCO's local exchange area and any switching directly serving the calling end user is provided by TWC. Accordingly, the Petition, on its face, is deficient. The time window for submitting an arbitration petition has closed and Sprint is now barred from making any new substantive allegations in this proceeding. Any effort by Sprint to amend its Petition at this late date would unalterably change the substance of the Petition, an action that falls outside of the Act's 135 to 160 day arbitration request window. *See* 47 U.S.C. §252(b).

6. Assuming, *arguendo,* that the Petition is not dismissed on either of the grounds noted above (and without waiver of its rights and position regarding the dismissal), the Commission's jurisdiction to consider the Petition filed by Sprint pursuant to the Act, to resolve disputed issues, and to approve an interconnection agreement between the parties would be found in 47 U.S.C. § 252(c).

II. BACKGROUND

7. SENTCO concurs with Sprint that Exhibit 2 attached to the Petition is a true and correct copy of the proposed draft Interconnection and Reciprocal Compensation Agreement (the "Agreement") between Sprint and SENTCO that reflects both the disputed and undisputed terms and conditions consistent with the parties' negotiations. SENTCO notes that the agreement was negotiated solely with respect to the situation where Sprint would be the competing provider for retail end user customers physically located within the SENTCO Falls City exchange. In the event that SENTCO identifies additional provisions on which the parties disagree, other than those identified in the Agreement, SENTCO reserves the right to bring such matters before the Commission and respectfully requests that the Commission also resolve those issues.

8. While Sprint has identified two issues in its Petition, the two stated issues are grounded on the common issue as to whether Sprint is entitled to include provisions in the Agreement to facilitate Sprint's business model in which Sprint provides a variety of private carrier transport and back office, vendor-like services to other competitive service providers (*see* Petition at 4), and specifically with regard to Sprint's private "business arrangement" with TWC. *Id.* at 3-4. As Sprint has admitted, TWC "provides

the 'last mile' network over hybrid fiber coaxial cable facilities, marketing and sales, end use billing, and customer service." *Id.*

9. The evidence introduced by Sprint in Commission Application No. C-3204 confirms that Sprint does not intend to provide local exchange service to end users in the SENTCO exchanges. In the Commission's Order entered in Application No. C-3204 on February 8, 2005, at page 2, the Commission found:

> Initially, Sprint proposes to provide transport, switching and interconnection for the origination and termination of local and long distance traffic. These services will be provided upon request of wholesale customers within the state of Nebraska. No deposits will be required. *Sprint intends to partner with cable companies who want to provide local and long distance service.* One such relationship exists with Time Warner Cable, whose CLEC application was granted on November 23, 2004. *Time Warner Cable will provide end user billing, marketing and sales, customer service and customer access. Sprint provides wholesale services that enable the Time Warner Cable retail service.* (emphasis added)

Subsequently, on page 4 of such Order the Commission further found:

> Sprint also testified that customer contact would ultimately be the responsibility of the carrier to whom Sprint provides its wholesale service.

10. SENTCO notes that this is the first occasion for the Commission to address the issues described above regarding a rural ILEC operating in the State of Nebraska. However, the identical issues described above have been presented by Sprint in other states and have been the subject of recent decisions. On May 26, 2005, the Iowa Utilities Board ("IUB") issued its Order in *Sprint Communications Company L.P. v. Ace Communications Group, et al.,* Docket No. ARB-05-2, and a true and correct copy of such Order is attached to this Response as Attachment B. In such Order at pages 17-18, the IUB held:

> The motions [to dismiss the petitions for arbitration] are granted with respect to the assertions that Sprint Communications Company, L.P., is not a

"telecommunications carrier" within the meaning of § 153(44) of the Act in the RLEC exchanges and therefore does not have the right to invoke the compulsory arbitration process under § 252 of the Act.

11. Also, the holding in the Proposed Order entered by the Administrative Law Judge in *Cambridge Telephone Company, et al. Petitions for Declaratory Relief,* Cases No. 05-259, *et seq.* (Ill. Comm. Comn. May 15, 2005) at page 12 is as follows:

> It is therefore ordered by the Illinois Commerce Commission that because Sprint Communications, L.P. d/b/a Sprint Communications Company L.P. is not a "telecommunications carrier" in the context of its relationship with MCC Telephony of Illinois, Inc., Petitioners have no obligation to negotiate with Sprint Communications, L.P. d/b/a Sprint Communications Company L.P., or any similarly situated entity, under subsections (a) and (b) of Section 251 of the federal Telecommunications Act.

A true and correct copy of the above-quoted Proposed Order is attached to this Response as Attachment C. SENTCO is in the process of compiling a list of all proceedings concerning the enabler issue.

III. MOTION TO DISMISS

12. The fundamental flaw in Sprint's legal position with regard to the enabler issue is Sprint's claim that Sprint is a "telecommunications carrier" as defined in Section 153(44) of the Act when it acts in its role as providing purported "wholesale" services that enable other carriers, such as Time Warner Cable, to provide retail services to end users.

13. While Sprint claims in the Petition that in its "enabler" role it is a telecommunications carrier that will be providing "telecommunications services" as defined in § 153(46) of the Act, it is clear (and Sprint admits) that in actuality TWC is the local exchange carrier that will be responsible for providing local exchange services to the public. As Sprint has stated, it is TWC that will be providing the "last mile" network

and "marketing and sales" and "end user billing" and "customer service." Petition at 4. Sprint's acknowledged role is that of an entity providing contract services to TWC. *See id.*

14. A necessary condition for an entity to assert rights under §§ 251 (a) or (b) of the Act is that it must be a "telecommunications carrier" under § 153(44) of the Act. Section 153(44) defines "telecommunications carrier" as "any provider of telecommunications services, except that such term does not include aggregators of telecommunications services (as defined in Section 226)." Section 153(46), in turn, defines "telecommunications service" as "the offering of telecommunications for a fee directly to the public, or to such classes of users as to be effectively available directly to the public, regardless of the facilities used."

15. Sprint does not propose to offer any telecommunications service to the public and would have no direct relationship with any end user whose traffic would be exchanged under the Agreement. Rather, Sprint has entered into a contract with TWC to provide certain services and such services are not available to the public in the SENTCO exchanges.

16. Relevant Federal Communications Commission ("FCC") and judicial precedents have interpreted the "telecommunications carrier" definition to include only those entities that "common carriers." Under the undisputed facts, Sprint is not holding itself out as a common carrier in the SENTCO Falls City exchange and thus, Sprint is not a "telecommunications carrier" in such exchanges for the purpose of invoking the arbitration procedures of § 252 of the Act. *See, Virgin Islands Telephone v. FCC,* 198 F.3d 921 (D.C.Cir. 1999) ("*VITELCO*") and *National Ass'n of Regulatory Util. Comm'rs*

v. FCC, 525 F.2d 630 (D.C. Cir. 1976) ("*NARUC I*"). Sprint, in its contract relationship with TWC, is not "holding oneself out to serve indiscriminately" (*NARUC-I,* 525 F.2d at 642), which the *VITELCO* court made clear is the "key determinant" (*VITELCO,* 198 F.3d at 927) of common carrier/telecommunications carrier status.

17. Since Sprint does not intend to offer its proposed services in the SENTCO Falls City exchanges to any party other than TWC pursuant to the individually-negotiated contract with TWC, Sprint is not holding itself out to serve all potential users indiscriminately. As such, Sprint is not a common carrier under *NARUC I,* and therefore is not a "telecommunications carrier" under § 153(46) as interpreted by the *Virgin Islands* Court and the FCC.

18. The decision of the Public Utilities Commission of Ohio in the case of *In the Matter of the Application and Petition in Accordance with Section II.A.2.b of the Local Service Guidelines Filed by: The Champaign Telephone Company, et al.,* Case No. 04-1494-TP-UNC, *et. seq.,* Findings and Order, Jan. 26, 2005, cited by Sprint in the Petition, improperly failed to consider the principles established by *NARUC I* and *Virgin Islands.* Such decision by the PUCO was appropriately criticized by the IUB and by the Illinois Administrative Law Judge in the decisions, copies of which are attached as Attachments B and C, respectively. While SENTCO is aware that the New York Public Service Commission has addressed the TWC/Sprint relationship, the relevant case law noted by Illinois and Iowa was not addressed in the decision. *See Order Resolving Arbitration Issues,* Cases 05-C-0170 and 05-C-0183, (the New York Public Service Commission, May 24, 2005).

19. Based on the facts as plead by Sprint, and those the Commission is well aware of based on its decision in Application No. C-3204, Sprint "third party business arrangements" (Petition at 6) are private, individually negotiated arrangements with telecommunications carriers such as TWC (*see* Application No. C-3228) to provide network arrangements on a private carrier basis or other vendor-like services such as retention of numbering resources, managing inter-carrier compensation and various directory listing and related services. To be sure, the record is void of any individually negotiated contract carrier offering or an agreement filed with the Commission for approval between Sprint and TWC.

20. This Commission must conclude that Sprint is a *non-telecommunications carrier* (*i.e.*, a private carrier or vendor) when Sprint provides its purported "wholesale" non-retail end user services to TWC. Accordingly, the Commission should dismiss the Petition, thereby avoiding further expenditure of resources by the Commission and the parties in this matter. That result, in turn, not only advances the public interest, but SENTCO respectfully submits that the dismissal of the Petition ensures proper application of the construct under which Congress sought to ensure that telecommunications carriers, *and only telecommunications carriers,* should be permitted to seek interconnection under Section 251 and compete for retail end user customers.

21. Even if the Commission were to look past the admissions of Sprint and applicable case law which supports the dismissal of the Petition for the reasons stated above, the Commission should still dismiss the Petition. Taken on its face, the Petition is devoid of any allegation that suggests that Sprint would serve retail end user customers physically located within SENTCO's exchange. Put another way, Sprint's Petition is

solely addressing its need for an interconnection agreement ("ICA") to effect its private business/contractual arrangements with TWC. The issues raised by Sprint, however, relate solely to the parameters under which the parties would exchange traffic subject to the reciprocal compensation obligations of Section 251(b)(5) of the Act. Those obligations, however, apply only to the carriers operating the "originating" network.

22. Congress, in establishing the pricing standards for reciprocal compensation, stated clearly that "such terms and conditions provide for the mutual and reciprocal recovery by each carrier of costs associated with the transport and termination on each carrier's network *of calls that originate on the network facilities of the other carrier.*" 47 U.S.C. § 252(d)(2)(ii) (emphasis added). Sprint admits that some other "third party" owns the "last mile" over which the end user will "originate" a call. *See* Petition at 4. The "origination" of a call occurs *only* on the network of the ultimate provider of end user service. The FCC has confirmed this analysis.

> We define "transport," for purposes of section 251(b)(5), as the transmission of terminating traffic that is subject to section 251(b)(5) from the interconnection point between the two carriers to the terminating carrier's end office switch that *directly serves the called party (or equivalent facility provided by an non-incumbent carrier).*

In the Matter of Implementation of the Local Competition Provisions in the Telecommunications Act of 1996; Interconnection between Local Exchange Carriers and Commercial Radio Service Providers, First Report and Order, CC Docket Nos. 96-98 and 95-185, 11 FCC Rcd 15499 (1996) ("*FCC Interconnection Order*") at 16015 (¶1039) (emphasis added). As the middle man in a "third party business arrangement " (Petition at 6), Sprint *does not* "directly serve[,] the called party." *FCC Interconnection Order* at

0058

16015 (¶1039). The equivalent facility is "the 'last mile' network" operated by TWC. Petition at 4.

23. Accordingly, to allow Sprint to assert Section 251(b)(5) rights, Sprint would need to operate the originating network, which is not stated in the Petition. To now expand the Petition to include a suggestion that Sprint wants to utilize the ICA to provide retail end user services to compete directly with SENTCO, *i.e.*, that Sprint would be operating the "originating" network that "directly serves" the end user making a call, would materially modify the Petition. Such a substantive revision to the Petition is time barred by the Act since the amendment falls outside Congress' 135 to 160 time frame established for arbitration requests. See 47 U.S.C. §252(b). Thus, the Petition should be dismissed for this independent reason.

IV. RESPONSE TO ARBITRATION ISSUES RAISED BY SPRINT

24. Assuming, *arguendo,* that the Commission does not dismiss the Petition in its entirety for the reasons stated in Section III, *supra,* SENTCO without waiving any of its rights or positions stated above, hereby responds to the issues raised in Sprint's Petition.

25. Issue No. 1 presented by Sprint is:

> **Should the definition of "End User or End User Customer" include end users of a service provider for whom Sprint provides interconnection and other telecommunications services? (Section 1.6 and as applied elsewhere in the Agreement.)**

26. Sprint claims "the NPSC has already contemplated and endorsed Sprint's business arrangement with Time Warner in Sprint's CLEC Certification Order." While SENTCO disputes Sprint's characterization of the Commission's Order entered in Application No. C-3204 on February 8, 2005, and notes the obvious fact that the terms of

such Order speak for themselves, such claim is entirely irrelevant to the resolution of Issue No. 1. Also irrelevant is Sprint's recitation of other arrangements it has entered with telephone companies in other states. *See* Petition at 4. Telephone companies, if they wish, are free to negotiate arrangements outside of the Act. (*see* 47 U.S.C. §251(a)(1)) However, SENTCO has elected, as is its right, *not* to negotiate an arrangement outside of the Act with Sprint.[3] Finally, Sprint's reliance on an FCC decision regarding directory listing and call completion is incomplete. *See* Petition at 8. Sprint fails to acknowledge that the FCC went on to state that when a directory assistance ("DA") provider is designated by a CLEC or another carrier (such as the case here where Sprint has entered into a private, individually negotiated "third party business arrangement[ ]" with TWC (*id.* at 6)), the DA providers' rights are subject to the terms and conditions of the ICA that the CLEC or other carrier has with the LEC whose database is being accessed. *See Provision of Directory Listing Information under the Telecommunications Act of 1934, As Amended, First Report and Order,* 16 FCC Rcd. 2736, 2748 (¶27)(2001)

27. With this background and with respect to the issue Sprint frames above, the appropriate answer is "no." Reciprocal compensation is only applicable to those carriers where they are the originating network provider directly serving the retail end user making the calls. *See* Section III,¶¶12-23, *supra.*

28. Thus, SENTCO respectfully requests that the Commission reject Sprint's additional language and adopt SENTCO's proposed end user definition.

---

[3] Sprint's reference to an FCC statement regarding Unbundled Networks Elements ("UNEs") is misleading. UNEs are required to be offered by non-rural ILECs under Section 251(c), a section not applicable to SENTCO because it is a rural telephone company as defined under the Act see 47 U.S.C. §153(37) and 47 U.S.C. §251(f)(1)). Moreover, this proceeding does not address any Section 251 (c) issue.

29. Issue No. 2 presented by Sprint is:

Should the definition of "Reciprocal Compensation" include the transportation and termination on each carrier's network of all Local Traffic? (Section 1.21 and as applied elsewhere in the Agreement.)

30. In the Petition, Sprint's discussion of this Issue is essentially limited to a summary reiteration of the arguments advanced in support of Sprint's position concerning Issue No. 1. SENTCO submits that not only are such arguments equally unavailing concerning Issue No. 2, but also there are additional obvious flaws in Sprint's position regarding this Issue.

31. Consistent with Section 252(d)(2)(a) and the *FCC Interconnection Order* (¶1039), SENTCO's position is that the phrase "that originates on the network facilities of the other carrier" should be added to the language of Section 1.21 of the Agreement which, as proposed by Sprint reads:

> "Reciprocal Compensation" means an arrangement between two carriers in which each receives compensation from the other carrier for the transport and termination on each carrier's network of Local Traffic, as defined in Section 1.13 above.

For the reasons stated in Issue 1, the "Local Traffic" at issue must be limited to traffic that is originated by and terminated to end users who are customers of either Sprint or SENTCO (the parties to the Agreement), as opposed to end user customers of a non-party to the Agreement such as TWC.

32. Based upon Sprint's stated service intentions in the SENTCO Falls City exchange, no Sprint end user customers will originate any traffic on which reciprocal compensation will be owed, and will not terminate any traffic on which Sprint will be owed reciprocal compensation by SENTCO. The reason for this is simple – Sprint will have no end user customers in the SENTCO exchange. If and when it does have its own

end user customers originating and terminating traffic in the SENTCO exchanges, the terms of the Agreement worded as proposed by SENTCO, would apply.

33. SENTCO reiterates the points and arguments in support of its positions concerning Issue No. 1 as set forth in paragraphs 24 through 28, *supra,* with regard to Issue No. 2 as if fully set forth herein. Accordingly, SENTCO respectfully requests that the Commission, should it need to, resolve Issue No. 2 as proposed by SENTCO.

34. To the extent not admitted in the preceding paragraphs, SENTCO denies each and every of the allegations set forth in the Petition, except to the extent that any of such allegations constitute admissions against the interests of Sprint.

RELIEF REQUESTED

SENTCO respectfully requests that the Commission issue its Order herein:

(1) Dismissing Sprint's Petition for Arbitration for the reason that Sprint is not a "telecommunications carrier" within the meaning of § 153(44) of the Act in the SENTCO exchanges and therefore has no right to invoke the compulsory arbitration process under § 252 of the Act;

(2) Dismissing Sprint's Petition for Arbitration for the reason that Sprint has not alleged that it will be the originating network for end users directly served by it and thus it cannot sustain any Section 251(b)(5) and is likewise time barred from involving the compulsory arbitration process under § 252 of the Act;

(3) Assuming, *arguendo,* that the Petition is not dismissed in its entirety for the reasons stated, requiring the parties to enter into an interconnection agreement that includes all of the terms agreed to by the parties, but excludes any and all provisions that actually or purportedly would exclude end user customers of third parties that are non-

parties to the Agreement from the scope of the Agreement, resolving Issues No. 1 and 2 in favor of SENTCO, and requiring Sprint and SENTCO to file for approval, pursuant to Section 252(e) of the Act, the Agreement with terms and conditions that conform with the above-described resolution of the Issues; and

(4) Granting SENTCO such other and further relief as may be equitable and proper.

Dated this 17th day of June 2005.

Respectfully submitted,

SOUTHEAST NEBRASKA TELEPHONE COMPANY

By: _____

Paul M. Schudel, #13723
James A. Overcash, #18627
WOODS & AITKEN LLP
301 South 13th Street, Suite 500
Lincoln, Nebraska 68508
(402) 437-8500

and

Thomas J. Moorman, D.C. Bar No. 384790
KRASKIN, MOORMAN & COSSON, LLC
2120 L Street, N.W., Suite 520
Washington, D.C. 20037
(202) 296-8890
Its Attorneys

0063

CERTIFICATE OF SERVICE

The undersigned hereby certifies that a true and correct copy of the foregoing **Motion to Dismiss or, in the Alternative, Response of Southeast Nebraska Telephone Company to Petition for Arbitration** has been served via hand-delivery upon Gene Hand, Director of Telecommunications, and upon Shana Knutson, Staff Attorney, 300 The Atrium, 1200 N Street, Lincoln, NE 68508, and by United States Mail upon Sprint Communications Company L.P.'s attorney, Diane C. Browning, 6450 Sprint Parkway, Mailstop KSOPHN0212-2A511, Overland Park, KS 66251, on this 17th day of June, 2005.

James A. Overcash

ALLEN L. OVERCASH
PAUL M. SCHUDEL
EDWARD H. TRICKER
WM. LEE MERRITT
JOSEPH H. BADAMI
KERRY L. KESTER
ROBERT B. EVNEN
JOEL D. HEUSINGER
TERRY C. DOUGHERTY
JENNIFER J. STRAND
CRAIG C. DIRRIM
BRUCE A. SMITH
JEFFERY T. PEETZ
KENT E. ENDACOTT
KRISTA L. KESTER
JAMES A. OVERCASH
NATHAN J. GURNSEY
KORY D. GEORGE
ANDREW B. KOSZEWSKI
TODD W. WEIDEMANN
DAVID J. MCCLURE

WOODS & AITKEN
L · L · P

LINCOLN OFFICE
SUITE 500
301 SOUTH 13TH STREET
LINCOLN, NEBRASKA 68508-2578
TELEPHONE 402-437-8500
FAX 402-437-8558

OMAHA OFFICE
SUITE 350
10250 REGENCY CIRCLE
OMAHA, NEBRASKA 68114-3754
TELEPHONE 402-898-7400
FAX 402-898-7401

WWW.WOODSAITKEN.COM

FILE Corr

January 12, 2005

Email: Pschudel@woodsaitken.com
Direct Dial: (402) 437-8509

Please Respond to Lincoln Office

VIA EMAIL AND U.S. MAIL

Monica M. Barone, Esq.
Mail Stop KSOPHN0212-2A203
6450 Sprint Parkway
Overland Park, Kansas 66251

Dear Monica:

On behalf of Southeast Nebraska Telephone Company ("SENTCO"), this letter responds to your January 5, 2005 correspondence written on behalf of Sprint Communications Company L.P. ("Sprint"). You may be correct that a call between us may have assisted efforts to resolve the confusion created by Sprint's various "stops and starts" that have occurred with respect to the nature of the interconnection that Sprint seeks from SENTCO. One constructive step that we can accomplish at this point is to assure that our respective files are complete with regard to prior communications between our clients on this subject. SENTCO received communications during 2004 from three Sprint representatives, Nicole E. Corsair, John Chuang and Vanessa J. Ruperto relating to interconnection matters. Several of such communications were in the form of emails. Because the attachments to your letter to me represent only a portion of such communications, I have attached copies of the remaining communications between Sprint and SENTCO that bear upon this matter of which I am aware. If you are aware of any other relevant communications, please feel free to share them with me.

From the outset, I want to make sure that you are aware of SENTCO's position regarding Sprint's communications concerning interconnection. In order to establish a clear understanding as to the nature of the interconnection sought by Sprint, SENTCO has consistently asked for information that would assist it in evaluating Sprint's request. The attached documentation confirms this fact. However, Sprint has consistently either declined to specify the interconnection arrangement it seeks from SENTCO or has modified the nature of such arrangement. Ms. Sickel's letter to John Chuang dated September 9, 2004 (a copy of which is attached to your January 5 letter), specifically stated that SENTCO "would be willing to discuss a voluntary schedule as a basis

Attachment A

for future discussions," assuming responses were provided to SENTCO's questions seeking additional information. Any inference in your letter that SENTCO is refusing to discuss interconnection matters with Sprint does not accurately portray the record of communications between the parties.

In any event, your January 5 letter still does not provide additional clarity to the unanswered question SENTCO has recently raised. Namely, what aspect of Section 251(c) does Sprint believe its request triggers? In fact, a reasonable reading of your January 5 letter creates additional questions.

For example, there is an inference in early paragraphs of your letter that Sprint's transmittal of the November 13 letter to the Nebraska Public Service Commission was an error, culminating in your explicit statement on page 2 (paragraph 2) that Sprint "is **not** seeking UNEs, resale or collocation. Sprint is not sure what else it can provide at this point." (emphasis in original). From these statements, one might conclude that Section 251(c) is not implicated at all in Sprint's request. On the other hand, your very next statement is that the "parties must sit down to discuss Sprint's proposal so that Sprint and SENTCO can jointly determine if Section 251(c) obligations are even implicated and thus, whether the Section 251(f)(1) rural exemption is even an issue."[1] Quite frankly, it is Sprint, *and not SENTCO*, that must determine what it seeks, and the implications that arise therefrom as relates to Section 251(c) and Section 251(f)(1).

Similarly, SENTCO does not know how to interpret your discussion of the Commission's policies and procedures established in the Order entered in Application No. C-3228 with respect to addressing requests for interconnection in which Sprint's purported "enabler" status is implicated. If Sprint's November 13 letter was transmitted to SENTCO to address Sprint's services to retail end user customers, then please say so. If not, then the procedures provided in the C-3228 Order appear to be relevant. To that end, it may simply be more efficient for both Sprint and SENTCO to seek the Commission's guidance on this aspect of your letter, particularly since SENTCO has notified the Commission previously that such direction was necessary. *See* attached copy of my letter to Mr. Hand dated December 23, 2004.

Rather than continue to belabor these points, however, SENTCO believes it would be constructive for the parties to participate in a meeting facilitated by one or more representatives of the Commission and/or its Staff. The purpose of such meeting would be solely to discuss the nature of the interconnection arrangement that Sprint seeks from SENTCO and to exchange information

---

[1] You mention later that "I am sure you are aware, a rural carrier is only relieved of its obligations under 251(c) of the Act (until the relevant Commission lifts the rural carrier's exemption)." Possibly a drafting error occurred in this aspect of your letter because I am not sure I fully understand your use of the term "until" in the context of your sentence. In any event, I can agree that the Act makes clear that a rural telephone company's exemption from the requirements established in Section 251(c) continues until the state commission removes the exemption pursuant to the procedures established in Section 251(f)(1).

that would ensure each party understands the scope of the request being made. The Commission's involvement will not only help us address the impact of the Commission's Order in Application No. C-3228 on Sprint's November 13 correspondence, but moreover such involvement should also facilitate achievement of Sprint's stated goal of ending "the apparent continued confusion" (an objective that SENTCO fully supports). As such, subject to identifying a mutually acceptable date for all parties, SENTCO agrees that this meeting should take place by the January 19 date you mention or as soon thereafter as possible.

In the spirit of ensuring clarity with respect to SENTCO's position, and based on your letter, SENTCO envisions that our discussion would address Section 251(b) arrangements that Sprint seeks from SENTCO as it relates to the services that Sprint will be providing to its retail end users. SENTCO's Section 251(a) offerings to other carriers are reflected in its exchange access tariffs. The discussion regarding the Commission's Order entered in Application No. C-3228 would address whether the Commission or its Staff believes that the procedures established in that decision apply. While SENTCO does not understand that Sprint has adopted a contrary position, SENTCO also wants to make clear that it does not intend to engage in discussions with respect to arrangements that are "without regard to the standards set forth in subsection[ ] (b) . . . of section 251." 47 U.S.C. §252(a)(1). To the extent that Sprint may seek to discuss any arrangement that is "without regard" to the established interconnection standards and controlling rules associated with Sections 251(b) of the Act, please let me know. Finally, each party would reserve its respective rights under Section 251(f)(1) of the Act in the event such rights are asserted at a later date

SENTCO looks forward to your response. SENTCO reaffirms its request that all correspondence regarding this matter be sent to me. If, in the future, SENTCO determines a different procedure should be used, I will let you know.

Very truly yours,

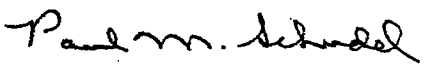

PMS|dh
Enclosures
cc: Mr. M. Gene Hand, Nebraska Public Service Commission (Via Hand Delivery, w/encls.)
Angela Melton, Esq., Nebraska Public Service Commission (Via Hand Delivery, w/encls.)
Elizabeth Sickel (via Email and US Mail, w/encls.)

STATE OF IOWA

DEPARTMENT OF COMMERCE

UTILITIES BOARD

IN RE ARBITRATION OF: SPRINT COMMUNICATIONS COMPANY L.P., Petitioning Party, vs. ACE COMMUNICATIONS GROUP, CLEAR LAKE INDEPENDENT TELEPHONE COMPANY, FARMERS MUTUAL COOPERATIVE TELEPHONE CO. OF SHELBY, FARMERS TELEPHONE COMPANY, FARMERS MUTUAL TELEPHONE COMPANY, GRAND RIVER MUTUAL TELEPHONE CORPORATION, HEART OF IOWA COMMUNICATIONS COOPERATIVE, HEARTLAND TELECOMMUNICATIONS COMPANY OF IOWA d/b/a HICKORYTECH, HUXLEY COMMUNICATIONS, IOWA TELECOMMUNICATIONS SERVICES, INC., d/b/a IOWA TELECOM f/k/a GTE MIDWEST, KALONA COOPERATIVE TELEPHONE, LA PORTE CITY TELEPHONE COMPANY, LEHIGH VALLEY COOPERATIVE TELEPHONE ASSOCIATION, LOST NATION-ELWOOD TELEPHONE COMPANY, MINBURN TELECOMMUNICATIONS, INC., ROCKWELL COOPERATIVE TELEPHONE ASSOCIATION, SHARON TELEPHONE, SHELL ROCK TELEPHONE COMPANY d/b/a BEVCOMM c/o BLUE EARTH VALLEY TELEPHONE COMPANY, SOUTH CENTRAL COMMUNICATIONS, INC., SOUTH SLOPE COOPERATIVE TELEPHONE COMPANY, SWISHER TELEPHONE COMPANY, VAN BUREN TELEPHONE COMPANY, INC., VENTURA TELEPHONE COMPANY, INC., VILLISCA FARMERS TELEPHONE COMPANY, WEBSTER CALHOUN COOPERATIVE TELEPHONE ASSOCIATION, WELLMAN COOPERATIVE TELEPHONE ASSOCIATION, and WEST LIBERTY TELEPHONE COMPANY d/b/a LIBERTY COMMUNICATIONS, Responding Parties.	DOCKET NO. ARB-05-2

ORDER GRANTING MOTIONS TO DISMISS

(Issued May 26, 2005)

Attachment B

PROCEDURAL HISTORY AND BACKGROUND

On March 31, 2005, Sprint Communications Company L.P. (Sprint) filed a petition with the Utilities Board (Board) requesting arbitration of certain terms and conditions of a proposed interconnection agreement between Sprint and several rural incumbent local exchange carriers,[1] hereinafter referred to as the RLECs. The petition was filed pursuant to § 252(b) of the Communications Act of 1934, as amended by the Telecommunications Act of 1996, Pub. L. No. 101-104, 110 Stat. 56 (1996) (hereinafter referred to as the "Act"). Although there are 27 individual interconnection agreements that underlie this arbitration petition, the unresolved issues are identical for each individual RLEC. Sprint filed one petition for arbitration and asked that the Board treat the filing as a consolidated petition for arbitration with respect to each RLEC identified and consider the issues in one docket. On April 12, 2005, the Board granted that request and identified the matter as Docket No. ARB-05-2.

On April 13, 2005, Heartland Telecommunications Company of Iowa, d/b/a HickoryTech (Heartland), filed a motion to dismiss Sprint's petition as not timely.

[1] Ace Communications Group, Clear Lake Independent Telephone Company, Farmers Mutual Cooperative Telephone Co. of Shelby, Farmers Telephone Company, Farmers Mutual Telephone Company, Grand River Mutual Telephone Corporation, Heart of Iowa Communications Cooperative, Heartland Telecommunications Company of Iowa d/b/a HickoryTech, Huxley Communications, Iowa Telecommunications Services, Inc. d/b/a Iowa Telecom f/k/a GTE Midwest, Kalona Cooperative Telephone, La Porte City Telephone Company, Lehigh Valley Cooperative Telephone Association, Lost Nation-Elwood Telephone Company, Minburn Telecommunications, Inc., Rockwell Cooperative Telephone Association, Sharon Telephone, Shell Rock Telephone Company d/b/a BEVCOMM c/o Blue Earth Valley Telephone Company, South Central Communications, Inc., South Slope Cooperative Communications Company, Swisher Telephone Company, Van Buren Telephone Company, Inc., Ventura Telephone Company, Inc., Villisca Farmers Telephone Company, Webster Calhoun Cooperative Telephone Association, Wellman Cooperative Telephone Association, and West Liberty Telephone Company d/b/a Liberty Communications.

Heartland alleges that Sprint's petition was filed on March 31, 2005, but that Sprint has admitted that the "window" for filing for arbitration under the act does not open until May 4, 2005. In support of this statement, Heartland attaches two letters it received from Sprint in February and March of 2005, in which Sprint indicates that the window for arbitration will open on May 4, 2005, and close on May 31, 2005.

On April 15, 2005, the RLEC Group[2] filed a motion to dismiss and a response to the petition. The RLEC Group moves to dismiss because, it argues, Sprint is not a competitive local exchange carrier, or CLEC, that is authorized to provide local exchange service in any of the exchanges served by the RLEC Group. The RLEC Group also asserts that the petition should be dismissed because Sprint is not a "telecommunications carrier" within the meaning of § 153(44) of the Act because Sprint does not provide, or intend to provide, local exchange service to end-users in any of the RLEC Group exchanges.

The RLEC Group also asserts that the Sprint petition is untimely and should therefore be dismissed. The RLEC Group points out that Sprint's original requests for negotiation stated that the date of the notices, October 20, 2004, "shall serve as the starting point for the one hundred thirty-five (135) day negotiation window under Section 252." Counting days from October 20, 2005, the RLEC Group alleges that the arbitration window closed March 29, 2005, so the petition missed the window.

Finally, the RLEC Group points to Sprint's letters of February 15 and March 23, 2005, in which Sprint represented the arbitration window as being from

[2] Being all of the RLECs except Iowa Telecommunications Services, Inc., d/b/a Iowa Telecom.

May 4 to May 31, 2005. The RLEC Group asserts its members have been prejudiced by the filing of the petition in advance of that window because "[t]his matter could have been resolved during the month of April with some time for contract discussions, if the arbitration window was open in accord with the Sprint letter." (RLEC Group motion to dismiss at page 7.)

Also on April 15, 2005, Iowa Telecommunications Services, Inc., d/b/a Iowa Telecom (Iowa Telecom), filed a motion to dismiss and response to the petition for arbitration. The Iowa Telecom motion is substantially similar to the RLEC Group motion.

On April 19, 2005, Sprint filed a response to the Heartland motion to dismiss, pointing out that § 252(b)(1) of the Act provides that either party to a proposed interconnection agreement may petition a state commission for arbitration during the period from the 135th to the 160th day, inclusive, after the date on which the incumbent local exchange carrier received the request for negotiation. Attached to Sprint's response is an overnight mail receipt showing that Heartland received Sprint's request for negotiations on October 22, 2004, so pursuant to statute the arbitration window was open from March 4, 2005, through March 31, 2005. Sprint admits that its letters of February 18 and March 23, 2005, inadvertently substituted the word "May" for "March" when reciting these dates, but asserts Heartland was not prejudiced by this error.

On April 26, 2005, Sprint filed a response to the motions to dismiss filed by Iowa Telecom and the RLEC Group. With regard to the timeliness issue, Sprint

makes the same response as it made to Heartland: The requests were received by the companies on October 22, 2005, so the last day to request arbitration was March 31, 2005, the date that Sprint filed its petition. As to the typographical errors in the letters of February 18 and March 23, 2005, Sprint asserts that the RLECs were not prejudiced by the error because they were not negotiating with Sprint at any time, so they cannot credibly claim that the matter might have been resolved by negotiations during the month of April.

As to the other issues raised by the RLEC Group and Iowa Telecom motions to dismiss, Sprint asserts that it is a telecommunications carrier offering telecommunications service under § 153(44) and § 153(46) of the Act because MCC Telephony of Iowa, Inc. (MCC), will be the "customer-facing" retail provider of local exchange services in the RLEC exchanges while Sprint will be providing interconnection and other telecommunications services to MCC. Sprint points out that § 153(46) of the Act defines "telecommunications services" as the "offering of telecommunications for a fee directly to the public, or to such class of users as to be effectively available directly to the public, regardless of the facilities used." Sprint argues that its proposed services fall within this definition.

Sprint also argues that its status as a certificated CLEC in any of the movants' exchanges is not dispositive of the issue of whether Sprint has a right to interconnect pursuant to §§ 251(a) and (b) of the Act. Sprint argues it is a local exchange carrier by virtue of providing "telephone exchange service" as defined in § 153(47) of the Act because Sprint will be providing local exchange service through its arrangements

with MCC and other providers. Thus, the end-users, or subscribers, will not subscribe directly with Sprint, but Sprint's switches, transmission equipment, and other facilities will be used by the subscribers to complete calls.

On April 29, 2005, the RLEC Group, Iowa Telecom, and Sprint all filed briefs in support of their positions regarding the motions to dismiss. The briefs expand on the respective positions of the parties, as described above, but for purposes of this order a separate summary of the briefs is not required. The cases and other authorities relied upon in the briefs will be discussed in the Board's analysis as relevant.

SUMMARY OF ARGUMENTS AND BOARD DISCUSSION

ISSUE ONE: Whether Sprint's petition is timely.

RLEC Position: In all the notices attached to Sprint's March 31, 2005, petition for arbitration, the date of the bona fide request was shown as October 20, 2004. The RLECs maintain that, based on the initial representations of Sprint as to the starting date of the 135-day negotiation window under Section 252, the window was open on March 4, 2005, and closed on March 29, 2005.

The RLECs also provide letters from Sprint representing that the arbitration window would open on May 4, 2005, and close on May 31, 2005. The RLECs state they relied upon the representation of the arbitration window made by Sprint in these letters. According to the RLECs, the issue is whether Sprint can represent that varying dates will apply, but be bound by none of them.

Sprint's Position: The Act clearly states that the arbitration window consists of the period from the 135th to the 160th day (inclusive) after the date on which an

incumbent local exchange carrier receives a request for negotiation. Sprint provides copies of overnight mail receipts for each of the 25 members of the RLEC Group indicating they received Sprint's request for interconnection on October 22, 2004. Sprint filed its petition on March 31, 2005, the 160th day of the window. Sprint acknowledges it erroneously quoted the arbitration window as May 4 through May 31, 2005, in two letters to the RLECs. Sprint states the error was inadvertent, and upon discovery of the error, Sprint contacted counsel for the RLECs to correct this error. Nonetheless, Sprint states the error does not relieve the RLECs of their own responsibility to keep track of the statutory arbitration window.

Board Discussion: The Board will deny the motions to dismiss based on the allegation that Sprint's petition was untimely filed with the Board. In this respect, the Act is clear. The window for requesting arbitration is to be calculated from the date the request for negotiations was received by the incumbent local exchange carrier. The RLECs received the requests on October 22, 2004, and Sprint's petition was therefore filed in a timely manner. Moreover, Sprint's unilateral[3] (and inadvertent) mis-statement of those dates cannot change the statute, at least in the absence of some showing of prejudice to the other parties. Here, the RLEC Group, Heartland, and Iowa Telecom have claimed prejudice, arguing that if the arbitration window had really been in May, they might have negotiated an interconnection agreement with

[3] The Board is aware that the parties to § 252 proceedings often, by agreement, designate a different date for the receipt of the request, and therefore extend the negotiating period beyond 160 days, but there is no provision for either party to do so unilaterally.

Sprint during April, but this argument assumes that the parties were negotiating in the first place. Instead, it appears that little or no negotiation took place between October of 2004 and March of 2005, making it reasonable to believe that there would have been no negotiations in April, either.

The motions to dismiss the petition based upon the date of filing are denied.

ISSUE TWO: Whether the RLECs have a duty to establish interconnection agreements with Sprint.

Iowa Telecom and RLEC Group Position: Sprint represents in its petition that it will be providing facilities-based competitive services, but it is clear that MCC is the local exchange carrier which will be responsible for providing local exchange services to the public. Sprint's role is that of a wholesaler providing contract services for MCC.

A necessary condition for an entity to assert rights under §§ 251(a), (b), and (c) of the Act is that it must be a "telecommunications carrier" pursuant to § 153(44) of the Act. Section 153(44) defines "telecommunications carrier" as "any provider of telecommunications services, except that such term does not include aggregators of telecommunications services (as defined in Section 226)." Section 153(46), in turn, defines "telecommunications service" as "the offering of telecommunications for a fee directly to the public, or to such classes of users as to be effectively available directly to the public, regardless of the facilities used." Because Sprint itself would offer no service to the public and would have no direct relationship with any end-user whose traffic would be exchanged under the proposed interconnection agreements, for the

purposes of this proceeding Sprint is not a telecommunications carrier and does not offer telecommunications service. Thus, the petition should be dismissed.

Even if Sprint were a "telecommunications carrier" under the Act, it would have no right to demand an interconnection agreement pursuant to § 251(b) of the Act, which is reserved only for local exchange and Commercial Mobile Wireless Service (CMRS) providers. Pursuant to § 153(26) a local exchange carrier is an entity "engaged in the provision of telephone exchange service or exchange access." Sprint's Iowa tariff defines its exchange area to include only the exchanges of Qwest Corporation. Authority to provide service in Qwest's exchanges as a CLEC does not give Sprint any right to insist on a local interconnection agreement with RLECs in other exchanges. Because Sprint is not authorized to provide exchange service beyond the exchanges of Qwest, the service Sprint proposes to offer does not qualify as telephone exchange service or exchange access service.

Sprint's Position: The motions to dismiss state that since Sprint is not a CLEC authorized to provide service in any of the exchanges of the RLECs, Sprint has no right to insist on a local interconnection agreement with the RLECs. Sprint argues that its status as a certificated CLEC in the RLEC exchanges is not determinative of interconnection rights under §§ 251(a) and (b) of the Act. Sprint's right to interconnection under § 251 is established by Sprint's status as a "telecommunications carrier" providing "telecommunications services" pursuant to §§ 153(44) and 153(46) of the Act. It is not necessary for Sprint to be a certificated

CLEC in any of the LEC's exchanges in order for it to be entitled to interconnection rights under § 251.

Federal law does not require CLEC certification as a pre-condition for interconnection. Instead, it allows for variations in how telecommunications services may be provided. This flexibility is demonstrated by the different requirements for CLEC certification in various states. For example, Iowa requires Board approval of a retail tariff before granting CLEC status. However, in other states, Sprint has received statewide CLEC status for the purpose of providing interconnection services to cable companies like the arrangement Sprint is proposing with MCC in Iowa. CLEC status is not a blanket requirement for interconnection under § 251 of the Act.

The RLECs allege that only local exchange and CMRS providers are eligible to assert interconnection rights under § 251(b). This is contrary to the FCC's ruling regarding the provision of directory listing information under the Act.[4] In that case, the FCC held that a directory assistance provider's provision of "call completion" service entitles the provider to nondiscriminatory directory assistance database access under § 251(b)(3), regardless of whether the provider is certified by the state as a CLEC.

In addition, even if it were true that only local exchange and CMRS providers are eligible to assert rights under § 251(b), Sprint is a local exchange carrier[5] by

[4] Provision of Directory Listing Information Under the Telecommunications Act of 1934, as Amended, CC-Docket No. 99-273, First Report and Order, 2001 FCC Lexis 473, para. 15-18 (rel. 1-23-01).
[5] Section 153(26) provides that the term "local exchange carrier" means any person that engages in the provision of telephone exchange service or exchange access.

virtue of providing "telephone exchange service" within the meaning of the Act. Sprint's provision of service to MCC will enable MCC customers to originate and terminate local telephone calls. This falls squarely within the definition of telephone exchange service under § 153(47).[6]

Because Sprint is providing "telephone exchange service" pursuant to § 251(b), Sprint is also entitled to local number portability parity pursuant to § 251(b)(2) and dialing parity pursuant to § 251(b)(3). Additionally, pursuant to § 251(b)(5) Sprint is entitled to reciprocal compensation arrangements for transport and termination of telecommunications traffic by nature of its status as a "telecommunications carrier."

Board Discussion: The Board will grant the motions to dismiss based on Sprint's status. The key language in § 153(46), providing that a telecommunications carrier must offer "telecommunications for a fee directly to the public, or to such classes of users as to be effectively available directly to the public," is not as clear as the statutory language relevant to the first issue, above. However, as the parties have pointed out in their briefs, this statutory definition has been the subject of interpretation by the Federal Communications Commission (FCC) and the courts. These bodies have interpreted the definition to require that a "telecommunications

[6] Section 153(47) provides that the term "local exchange carrier" means A) service within a telephone exchange, or within a connected system of telephone exchanges within the same exchange area operated to furnish to subscribers intercommunicating service of the character ordinarily furnished by a single exchange, and which is covered by the exchange service charge, or (B) comparable service provided through a system of switches, transmission equipment, or other facilities (or combination thereof) by which a subscriber can originate and terminate a telecommunications service.

carrier" can be either a retail or wholesale provider, but it must be a common carrier. Based on those interpretations, Sprint is not a "telecommunications carrier" in these exchanges for purposes of invoking the negotiation and arbitration procedures of § 252 of the Act because it is not, in this context, holding itself out as a common carrier.

The most relevant case is Virgin Islands Telephone v. FCC, 198 F.3d 921 (D.C. Cir. 1999), in which the court reviewed an FCC order granting AT&T Submarine Systems, Inc. (AT&T-SSI), rights to land an undersea cable even though AT&T-SSI was not a common carrier. In reviewing the AT&T-SSI application, the FCC determined that AT&T-SSI was not a "telecommunications carrier" under the Act because it would not function as a common carrier. AT&T-SSI proposed to offer its services to retail telecommunications carriers and relied upon the retail service offerings by its wholesale customers in claiming it was, itself, a telecommunications carrier, much like Sprint is relying on the proposed retail service offerings of MCC to support Sprint's claim to be a telecommunications carrier. The FCC rejected AT&T-SSI's arguments, and the court affirmed.

In its own analysis of the Virgin Islands decision, Sprint points out that the FCC's order in that case observed that the Act's definition of "telecommunications service" includes wholesale services to other carriers. (Sprint brief at page 9.) In other words, the FCC's focus, and therefore the reviewing court's focus, was not on the question of whether AT&T-SSI was a retailer or a wholesale; instead, it was on the question of whether AT&T-SSI was a common carrier or a private carrier. Thus,

the FCC's order and the court's decision "minimize the distinction between 'directly to the public' and 'effectively available directly to the public'...." (Sprint brief at page 8.) The Board agrees that the FCC and the Virgin Islands Court did not adopt a wholesale/retail distinction in interpreting the language of the statute. However, the FCC's interpretation, affirmed by the court, distinguishes between common carriers and private carriers and determined that a "telecommunications carrier" under the Act must be a "common carrier." That term, in turn, is defined by a two-pronged test: First, whether the carrier holds itself out to serve all potential users indifferently and second, whether the carrier allows customers to transmit information of the customer's own design and choosing. United States Telecom Ass'n v. FCC, 295 F.3d 1326, 1329 (D.C. Cir. 2002) (hereinafter USTA), citing National Ass'n of Regulatory Util. Comm'rs v. FCC, 525 F.2d 630, 642 (D.C. Cir. 1976).

In this proceeding, it is clear that Sprint does not intend to offer its proposed service in the RLEC exchanges to any party other than its private business partners, pursuant to individually-negotiated contracts. At no point in this proceeding has Sprint asserted that it will make its proposed services available on a common carrier basis. Thus, Sprint cannot satisfy the first prong of the NARUC 1 test, is not a common carrier (in this respect), and therefore is not a "telecommunications carrier" under § 153(46) as interpreted by the Virgin Islands Court and the FCC.[7]

[7] The test for determining whether a carrier is a "common carrier" is analyzed in some detail in the USTA decision. The key question for purposes of this case appears to be whether in these RLEC exchanges Sprint will hold itself out indiscriminately to serve all within the class of potential customers. USTA, 295 F.3d at 1329-30, citing various FCC decisions. Again, there is nothing in Sprint's petition to demonstrate that it will serve all customers on the same terms and conditions; instead, it appears

The parties refer to a number of other decisions in support of their respective positions, but none of them are as directly relevant to this matter as the decisions summarized above. For example, the RLEC Group refers to the Board's recent order in Re: Level 3 Communications, LLC, Docket No. TF-05-31 (TCU-99-1), for the proposition that the Board distinguishes carriers that offer service to the public from carriers who limit service to business partners. (RLEC Group brief at 8.) However, that order was concerned only with Iowa Code § 476.29, which makes a clear distinction between retail and wholesale services; it is not directly relevant to interpretation of the federal statutes at issue here.

This distinction is also reflected in the Board's decision in Re: Intrado Communications, Inc., Docket No. TCU-02-1, "Order Denying Application For Certificate (Without Prejudice)" (issued March 15, 2002), in which the Board determined that certification pursuant to Iowa Code § 476.29 is not a prerequisite to being considered a telecommunications carrier under the Act. In Intrado, the carrier proposed to offer a wholesale 911 emergency call-related service to any local exchange carrier that wanted it. This was sufficient to qualify the company as a common carrier and therefore a telecommunications carrier under the Act. The fact that the carrier was not eligible for a § 476.29 certificate was irrelevant.

Sprint cites the Board to a decision of the Public Utilities Commission of Ohio, In the Matter of the Application and Petition in Accordance with Section II.A.2.b of the

---

Sprint intends to negotiate separately with each potential customer, to the extent it has customers other than MCC.

Local Service Guidelines Filed by: The Champaign Telephone Company, et al., Case No. 04-1494-TP-UNC *et seq.*, "Finding And Order" (issued January 26, 2005) and the associated "Order On Rehearing" issued April 13, 2005. In that case, which involved an ILEC assertion of rural exemption status under the Act, the Ohio commission concluded that MCI was a "telecommunications carrier" under the Act when it had made arrangements to provide services to Time Warner, which would then make those services available to the public. Sprint argues that it is in the same position in Iowa, as an "intermediate carrier."

The Ohio commission's decision appears to be based solely on the language of the Act, without reference to the FCC and court decisions interpreting the statute. In particular, the decision makes no mention of the D.C. Circuit's Virgin Islands decision and the FCC rulings reviewed therein. Thus, the Ohio decision never addresses the question of whether MCI is proposing to operate as a common carrier. For this reason, the Board finds the Champaign order to be of little help in this proceeding.

Moreover, the Board notes that in the Ohio proceedings, MCI represented to the commission that it would "submit order to Applicants on Time Warner's behalf...." This language implies an agency relationship between MCI and Time Warner that, on this record, does not exist between Sprint and MCC. That is, Sprint does not seek to negotiate and, if necessary, arbitrate an interconnection agreement on MCC's behalf; instead, it seeks an interconnection agreement in its own name, which it will then use

to handle traffic from customers of MCC and, potentially, other telecommunications carriers that do not have their own interconnection agreements with the RLECs.

This is a significant distinction between the Ohio decision and the case before the Board. It appears that if Sprint had sent the RLECs a request for negotiations on behalf of MCC, the RLECs would have been required to participate in the § 252 negotiation and arbitration process. By seeking an agreement in its own name, in contrast, Sprint removed these negotiations from the § 252 process. This decision may have had a legitimate business purpose from Sprint's point of view, but the difference may be more than a technicality to the RLECs; the compensation that may be owed by one party to an interconnection agreement to the other party can depend upon where the calls originated, what type of carrier they originated with, and other factors. If the RLECs have separate interconnection agreements with each telecommunications carrier providing service in their exchanges, they may have a better chance of correctly identifying and classifying the traffic they receive and therefore that the compensation they pay or receive is correct.

It is possible that this issue might have been resolved during negotiation and arbitration, if the parties had chosen to pursue that option. The Board believes the RLECs could have waived their objection to negotiating and arbitrating with Sprint in these circumstances, but the Act did not require them to do so.

The result of the RLECs' refusal to negotiate with Sprint is that MCC's entry as a competitor in the RLEC exchanges will be delayed while Sprint (or MCC) submits a new request and starts the process over. On its face, this result may appear to be

contrary to the public's interest in having a choice of telecommunications service providers as soon as possible. However, it would be even worse if the Board were to deny the motion to dismiss and invest time and resources in arbitrating an interconnection agreement between Sprint and the RLECs, only to be reversed in court because of a lack of jurisdiction under the Act.

Moreover, when the parties start over, they will be able to actually negotiate regarding the appropriate terms and conditions of their interconnection agreements. No such negotiations have taken place to date. The Board believes it will be beneficial if the negotiations process required by § 252(b)(5) is pursued before arbitration begins.

ORDERING CLAUSES

IT IS THEREFORE ORDERED:

1. The "Motion to Dismiss Petition for Arbitration as Not Timely" filed by Heartland Telecommunications Company of Iowa, d/b/a HickoryTech, on April 13, 2005, is denied.

2. The motions to dismiss filed by the RLEC Group and Iowa Telecommunications Services, Inc., d/b/a Iowa Telecom, on April 15, 2005, are granted in part and denied in part. The motions are denied with respect to the assertions that the petitions for arbitration filed in this docket on March 31, 2005, were not timely filed. The motions are granted with respect to the assertions that Sprint Communications Company, L.P., is not a "telecommunications carrier" within

the meaning of § 153(44) of the Act in the RLEC exchanges and therefore does not have the right to invoke the compulsory arbitration process under § 252 of the Act.

3. Docket No. ARB-05-2 is closed.

UTILITIES BOARD

/s/ John R. Norris

/s/ Diane Munns

ATTEST:

/s/ Judi K. Cooper
Executive Secretary

/s/ Elliott Smith

Dated at Des Moines, Iowa, this 26th day of May, 2005.

STATE OF ILLINOIS

ILLINOIS COMMERCE COMMISSION

Cambridge Telephone Company	:	
C-R Telephone Company	:	
El Paso Telephone Company	:	
Geneseo Telephone Company	:	05-0259
Henry County Telephone Company	:	05-0260
Mid Century Telephone Company	:	05-0261
Reynolds Telephone Company	:	05-0262
Metamora Telephone Company	:	05-0263
Harrisonville Telephone Company	:	05-0264
Marseilles Telephone Company	:	05-0265
Viola Home Telephone Company	:	05-0270
	:	05-0275
Petitions for Declaratory Relief and/or	:	05-0277
Suspension or Modification Relating	:	05-0298
to Certain Duties under Sections	:	
251(b) and (c) of the Federal	:	(Cons.)
Telecommunications Act, pursuant to	:	
Section 251(f)(2) of that Act; and for	:	
any other necessary or appropriate	:	
relief.	:	

PROPOSED ORDER

By the Commission:

I. INTRODUCTION

From April 15, 2005 through May 4, 2005, Cambridge Telephone Company, C-R Telephone Company, El Paso Telephone Company, Geneseo Telephone Company, Henry County Telephone Company, Mid Century Telephone Company, Reynolds Telephone Company, Metamora Telephone Company, Harrisonville Telephone Company, Marseilles Telephone Company, and Viola Home Telephone Company (collectively "Petitioners") each filed with the Illinois Commerce Commission ("Commission") a verified petition requesting extensive relief from certain obligations under the federal Telecommunications Act ("Federal Act"), 47 U.S.C. 151 et seq. Because the petitions are nearly identical, the dockets have been consolidated.

As an initial matter, Petitioners asks the Commission to promptly enter an interim order without hearing staying any obligation they have to negotiate reciprocal compensation or interconnection with Sprint Communications, L.P. d/b/a Sprint Communications Company L.P. ("Sprint") and staying any arbitration proceeding which may arise from Petitioners and Sprint's inability to agree on certain interconnection

Attachment C

matters until this proceeding has concluded. Thereafter, Petitioners seek a declaratory ruling by the Commission, pursuant to 83 Ill. Adm. Code 200.220, finding that they have no duty under Section 251(b)(2) and (5) of the Federal Act to negotiate reciprocal compensation or local number portability and no duty under Section 251(c) of the Federal Act to negotiate interconnection with an indirect transiting carrier or any carrier that does not intend to provide local exchange telecommunications service in their respective local serving areas. In response to an April 21, 2005 legal inquiry by the Administrative Law Judge ("ALJ"), Petitioners clarify the relief they seek by stating that if the Commission does not issue the initial declaratory ruling sought by Petitioners, the Commission should issue a declaratory ruling concluding that Petitioners are exempt from negotiating any terms of interconnection or reciprocal compensation by virtue of its rural exemption under Section 251(f)(1) of the Federal Act.

If the Commission does not enter either of the declaratory rulings sought by Petitioners, they seek an order, pursuant to Section 251(f)(2) of the Federal Act, suspending or modifying their obligation to negotiate reciprocal compensation or local number portability under Section 251(b)(2) and (5) with an indirect transiting carrier that does not intend to provide local exchange telecommunications service in their respective local serving areas and has no ability to unambiguously identify the traffic it would terminate as "local" to Petitioners. Also pursuant to Section 251(f)(2) of the Federal Act, Petitioners seek a suspension or modification of their obligation to negotiate interconnection under Section 251(c) with a carrier seeking to force them to establish and support a point of interconnection outside of their respective local serving areas. In the event that they are not able to obtain the desired suspensions or modifications under Section 251(f)(2), Petitioners ask that the Commission identify the terms and conditions, including timeframes, under which they may have a duty to negotiate with Sprint.

Only Sprint filed a petition to intervene, which was granted by the ALJ. Commission Staff ("Staff") participated as well. The aforementioned April 21, 2005 inquiry from the ALJ also specified the date by which Staff and any intervener should respond to the declaratory ruling request. A deadline was also established by which Petitioners should reply to any response from Staff and any intervener. Sprint offered a response to the ALJ's April 21, 2005 inquiry as well as a response to the merits of Petitioners' declaratory ruling requests. Staff, however, only responded to the ALJ's inquiry and specifically declined to offer any opinion on the substance or merits of the petitions. Petitioners each filed a reply to the responses of Staff and Sprint.

Although Petitioners seek an interim order staying any obligation to negotiate with Sprint, the Commission believes that it can sufficiently address the issues raised by Petitioners in a timely manner with a single order. In accordance with Section 200.220(h) of the Commission's rules, the Commission disposes of the requests for the declaratory rulings on the basis of the written submissions before it.

II. BACKGROUND

Petitioners are small facilities-based incumbent local exchange carriers ("LEC") providing local exchange services, as defined in Section 13-204 of the Public Utilities Act ("Act"), 220 ILCS 5/1-101 et seq., subject to the jurisdiction of the Commission. Cambridge Telephone Company provides service in the Cambridge and Osco exchanges. C-R Telephone Company serves the Cornell and Ransom exchanges. El Paso Telephone Company serves only the El Paso exchange. Geneseo Telephone Company provides service in the Geneseo and Green River exchanges. Henry County Telephone Company serves the Atkinson and Annawan exchanges. Mid Century Telephone Company serves the Ellisville, Altona, Williamsfield, Table Grove, Summum, Fairview, Smithfield, Maquon, Gilson, Victoria, Marietta, Bishop Hill, and Lafayette exchanges. Reynolds Telephone Company serves only the Reynolds exchange. Metamora Telephone Company provides service in the Metamora and Germantown Hills exchanges. Harrisonville Telephone Company serves the Columbia, Dupo Prairie Du Rocher, Red Bud, Renault, Valmeyer, and Waterloo exchanges. Marseilles Telephone Company serves only the Marseilles exchange while Viola Home Telephone Company serves only the Viola exchange. Petitioners each provide service to less than 2% of subscriber lines nationwide. Petitioners are each a "rural telephone company" within the meaning of Section 153(37) of the Federal Act and Section 51.5 of the rules of the Federal Communications Commission ("FCC"). As rural telephone companies, Petitioners each possess a rural exemption under Section 251(f)(1)(A) of the Federal Act from the requirements of Section 251(c) of the Federal Act.

Sprint is an interexchange telecommunications carrier authorized to provide interexchange services throughout Illinois. Sprint is authorized by the Commission to provide resold and facilities-based local exchange telecommunications services as well in those portions of Illinois served by Illinois Bell Telephone Company and Verizon North, Inc. and Verizon South, Inc. According to Sprint's petition to intervene, such local authority was granted in Docket Nos. 96-0141 and 96-0598, respectively. Pursuant to the Order entered in Docket No. 96-0261, Sprint states that it is also authorized to provide resold local exchange services in those portions of MSA-1 served by Central Telephone Company of Illinois ("Centel"). Sprint relates that it received authority to provide local exchange service in those portions of Illinois outside of MSA-1 served by Centel in Docket No. 97-0295. Sprint reports that the Centel exchanges have subsequently been sold to Illinois Bell Telephone Company and Gallatin River Communications L.L.C. Sprint currently is not authorized to provide local exchange services within any of the Petitioners' serving areas. On May 6, 2005, however, Sprint filed an application requesting authority to provide resold and facilities-based local and interexchange services throughout Illinois. Sprint's application is identified as Docket No. 05-0301.

As indicated above, Petitioners have initiated these proceedings to resolve certain disputes with Sprint. On September 7, 2004, Sprint sent a letter to each Petitioner seeking to begin negotiations for an interconnection agreement pursuant to Sections 251 and 252 of the Federal Act. Over the next few months, Petitioners and

Sprint exchanged correspondence intended to focus and clarify the interconnection request. Sprint does not seek to interconnect with Petitioners pursuant to Section 251(c) of the Federal Act. Rather, Sprint wishes to interconnect and exchange traffic pursuant to subsections (a) and (b) of Section 251.

SAME CASE AS ONE.

According to Sprint, it seeks interconnection with Petitioners to offer competitive alternatives in telecommunications services to consumers in rural Illinois through a business model in which Sprint provides telecommunications services to other competitive service providers seeking to offer local voice service. With regard to Illinois, Sprint has entered into a business arrangement with MCC Telephony of Illinois, Inc. ("MCC") to support its offering of local and long distance voice services.[1] Sprint states that the relationship enables MCC to enter the local and long distance voice market without having to "build" a complete telephone company. In effect, MCC has outsourced much of the network functionality, operations, and back-office systems to Sprint. Sprint relates that it has relationships utilizing this same market entry model with Wide Open West, Time Warner Cable, Wave Broadband, Blue Ridge Communications, and others not publicly announced serving almost 300,000 customers across over a dozen states including Illinois.

Under the arrangement between MCC and Sprint, MCC is responsible for marketing and sales, end-user billing, customer service, and the "last mile" portion of the network which includes the MCC hybrid fiber coax facilities, the same facilities it uses to provide video and broadband Internet access. Service is provided in MCC's name. Sprint provides the public switched telephone network ("PSTN") interconnection utilizing Sprint's switch (MCC does not own or provide its own switching), competitive LEC status, and the interconnection agreements it has or is negotiating with incumbent LECs. Sprint also uses existing numbers or acquires new numbers, provides all number administration functions including filing of number utilization reports with the North American Numbering Plan Administrator, and performs the porting function whether the port is from the incumbent LEC or a competitive LEC to Sprint or vice versa. Sprint is also responsible for all inter-carrier compensation, including exchange access and reciprocal compensation. Sprint provisions 9-1-1 circuits to the appropriate Public Safety Answering Points ("PSAP") through the incumbent LEC selective routers, performs 9-1-1 database administration, and negotiates contracts with PSAPs where necessary. Finally, Sprint places MCC directory listings in the incumbent LEC or third party directories.

In light of the relationship between Sprint and MCC, specifically the services provided by Sprint to MCC, Petitioners contend that it has no obligation to negotiate reciprocal compensation, local number portability, or interconnection with Sprint.

[1] On December 15, 2004, the Commission entered an Order in Docket No. 04-0601 authorizing MCC to provide resold and facilities-based local and interexchange telecommunications services throughout Illinois. MCC is an affiliate of Mediacom Communications Corporation, a cable television provider within parts of Petitioner's serving area.

Petitioners maintain this position regardless of its rural carrier exemption under Section 251(f)(1)(A).

III. SECTION 251(f)(1)(A) THRESHOLD INQUIRY

Despite Petitioners' insistence to the contrary, a threshold inquiry involving Section 251(f) exists that could resolve this matter, at least in part. As previously noted, Section 251(f)(1)(A) exempts Petitioners, as rural telephone companies, from the obligations imposed in Section 251(c).[2] Nevertheless, Petitioners seek a declaratory ruling that it need not negotiate interconnection as required by Section 251(c), or, in the alternative, a suspension under Section 251(f)(2) of the obligation to negotiate interconnection as required by Section 251(c). Although Petitioners seek the relief regarding Section 251(c) independent of the Section 251(f)(1)(A) exemption, the Commission is not inclined to expend limited resources answering questions that are moot. Because Petitioners possess an exemption from Section 251(c), the type of arrangement Sprint has with MCC and the services provided by Sprint to MCC are irrelevant as they relate to Section 251(c). Accordingly, the Commission declines to issue a declaratory ruling regarding the obligations established by Section 251(c), which is within its discretion to do under Section 200.220(a). Nor will the Commission consider a suspension of the Section 251(c) obligations under Section 251(f)(2) given the exemption Petitioners already possess. In any event, the Commission notes Sprint's claim that it is not seeking interconnection under Section 251(c).

The next step in the inquiry is to determine whether Petitioners' exemption from Section 251(c) also covers their obligations under Section 251(b). Section 251(c)(1) obligates all incumbent LECs to negotiate in good faith terms and conditions of agreements fulfilling the obligations established for all LECs (both incumbent and competitive) in Section 251(b). Petitioners argue that their duty to negotiate the obligations of Section 251(b) arise from Section 251(c). If Section 251(c) does not apply to them, Petitioners conclude that Section 251(b) can not either. Staff, however, contends that Petitioners overstate the reach of their exemption from Section 251(c). Section 251(b), according to Staff, establishes obligations of all LECs independent from any exemption of Section 251(c) for rural incumbent LECs. Because it seeks to interconnect under Section 251(a) and (b), Sprint maintains that Section 251(f)(1) provides no exemption for Petitioners. Consistent with the FCC's treatment of this issue, the Commission finds that an exemption from Section 251(c) does not encompass the obligations imposed in Section 251(b). Section 251(f)(1)(A) provides relief only from the requirements of Section 251(c).

In light of the limited scope of Section 251(f)(1)(A), Petitioners' declaratory ruling request regarding Section 251(b)(2) and (5) remains for the Commission's consideration. Whether Petitioners have any duty under Section 251(a) and (b) to provide number portability and establish reciprocal compensation arrangements for the

[2] The Commission also notes that it has not received a bona fide request seeking to lift any of the Petitioners' exemption pursuant to Section 251(f)(1)(B).

transport and termination of telecommunications under the circumstances described above is the focus of the remainder of this Order.

IV. PETITIONERS' DUTY TO NEGOTIATE[3]

A. Petitioners' Position

While Petitioners do not deny that Sprint is a telecommunications carrier that provides telecommunications services in various areas of Illinois, Petitioners do not believe that this fact means that Sprint is a telecommunications carrier for all purposes. Petitioners note Sprint's acknowledgement of the fact that the focus of both the state and federal definitions of telecommunications services is primarily upon the services being provided rather than the provider of those services. Petitioners point out that Section 51.703(a) of the FCC's rules provides that LECs must "establish reciprocal compensation arrangements for transport and termination of telecommunications traffic with any requesting *telecommunications carrier*." (emphasis added) Section 153(44) of the Federal Act defines "telecommunications carrier" as:

> any provider of telecommunications services, except that such term does not include aggregators of telecommunications services (as defined in section 226). A telecommunications carrier shall be treated as a common carrier under [the Federal Act] only to the extent that it is engaged in providing telecommunications services, except that the [FCC] shall determine whether the provision of fixed and mobile satellite service shall be treated as common carriage.

Section 153(46) of the Federal Act defines "telecommunications service" as "the offering of telecommunications for a fee directly to the public, or to such classes of users as to be effectively available directly to the public, regardless of the facilities used."

Petitioners apply the Federal Act's definitions to the service that Sprint intends to provide MCC and conclude that Sprint is not acting as a telecommunications carrier. Specifically, Petitioners state that Sprint clearly will not be providing the services over which it seeks negotiation "directly" to the public. Nor, Petitioners continue, can it be said that Sprint will be providing services "to such classes of users as to be effectively available directly to the public" when it provides services to MCC which will then provide services to the public. Petitioners acknowledge that the Public Utilities Commission of Ohio ("PUCO") recently issued a decision rejecting the arguments Petitioners now make. In the PUCO docket,[4] similarly situated small rural incumbent LECs sought exemptions under Section 251(f)(1) and (2) of the Federal Act when confronted with an arrangement between MCImetro Access Transmission Services, LCC, Intermedia

---

[3] As noted above, when given the opportunity, Staff declined to address the merits of Petitioners' declaratory ruling request.

[4] *In the Matter of the Application and Petition in Accordance With Section II.A.2.b. of the Local Guidelines Filed by: The Champaign Telephone Company* et al. 04-1494-TP-UNC et seq., Finding and Order, January 26, 2005; Order on Rehearing, April 13, 2005.

Communications, Inc., and Time Warner Cable Information Services (Ohio), LLC similar to the arrangement between Sprint and MCC. Petitioners contend that the PUCO is simply wrong.

In support of its view of the PUCO decision, Petitioners state that both the FCC and United States Court of Appeals for the District of Columbia Circuit have rejected the argument that a service can be interpreted as effectively available directly to the public by looking to how a private carriers' telecommunications carrier customers use that service. According to Petitioners, in *Virgin Islands Telephone Corp. v. FCC*, 198 F.3d 921 (1999), the D.C. Circuit affirmed the FCC's conclusion that the term "telecommunications carrier" under the Federal Act incorporates the preexisting definition of "common carrier" established by the earlier case of *National Association of Regulatory Commissioners v. FCC* ("*NARUC*"), 525 F.2d 630 (D.C. Cir. 1976). (*See Virgin Islands Telephone Corp.*, 198 F.3d at 925-26)

Under the *NARUC* test, Petitioners state that "common carrier" status turns on whether the carrier "undertakes to carry for all people indifferently." (*Id.* at 926 (citing *NARUC*, 525 F.2d at 642)) In *Virgin Islands Telephone*, the court reviewed an FCC finding that an AT&T affiliate called AT&T-SSI was not acting as a common carrier by making capacity on its submarine cables available to other telecommunications providers that would, in turn, make that capacity available through services provided to end-user customers. The FCC had concluded that a service will not be considered "available to the public" or "effectively available to a substantial portion of the public" if it is "provided only for internal use or only to a specified class of eligible users under the Commission's rules." The FCC also stated that "whether a service is effectively available directly to the public depends on the type, nature, and scope of users for whom the service is intended and whether it is available to 'a significantly restricted class of users." (*Virgin Islands Telephone*, 198 F.3d at 924) The FCC rejected the argument that AT&T-SSI would be making a service effectively available directly to the public because AT&T-SSI's *customers* would use the capacity to provide a service to the public, noting that "[s]uch an interpretation is contrary to the plain language of the [Federal Act] by focusing on the service offerings AT&T-SSI's customers may make rather than on what AT&T-SSI will offer." (*Id.*)

In reaffirming the *NARUC* test, Petitioners note that the FCC specifically rejected the inclusion of a "carrier's carrier" in the definition of telecommunications carrier and specifically rejected the suggestion that the Federal Act "introduce[d] a new concept whereby we must look to the customers' customers to determine the status of a carrier." (*Id.* at 926) According to the court, Petitioners continue, the key to common carrier status is "the characteristic of holding oneself out to serve indiscriminately." (*Id.* at 927) (quoting *NARUC*, 525 F.2d at 642) Petitioners state that the court approved the FCC's decision to contrast such common carrier/telecommunications carrier behavior to "private carrier" activity under which a carrier makes individualized decisions about whether and on what terms to serve done under contract between carriers. (*Virgin Islands Telephone Corp.*, 198 F.3d at 925)

Under this analysis, Petitioners argue that Sprint is clearly acting as a private carrier in its dealings with MCC. Petitioners add that it makes no difference whether Sprint is acting as a transiting carrier or a private switching and back office service provider. So long as Sprint is not providing service to end-users or making its service available indiscriminately to all takers, Petitioners aver that Sprint is providing private carrier or vendor services to MCC and is not providing service to the public. As a private carrier, Petitioners maintain that Sprint is not a telecommunications carrier and is not seeking to negotiate for the provision of telecommunications service in Petitioners' respective serving areas.

Petitioners also argue that Sprint's definition of telecommunications carrier does not comply with common sense. For example, even though Sprint seeks to negotiate reciprocal compensation, Petitioners assert that Sprint will originate no traffic on which reciprocal compensation will be owed and will terminate no traffic on which it will be owing. Any such traffic, Petitioners continue, would be MCC's and MCC should be primarily responsible. Similarly, while Sprint seeks an agreement on local number portability, the entity to which such numbers would be ported to and portable from would be MCC. Petitioners contend that MCC should be responsible for such obligations directly to it. The same is true, Petitioners add, with dialing parity. In all cases, Petitioners argue, the contractual rights that Sprint is seeking would be properly negotiated by MCC and the contractual obligations for which they will be negotiating should be obligations on MCC for which they should have rights enforceable against MCC. Petitioners aver that the overall design of subsections (b) and (c) of Section 251 is to establish contractual privity between the parties that have the reciprocal rights and obligations. Petitioners do not believe that it makes any sense to interpose a back office service provider into the middle of that relationship. If MCC intends to provide telecommunications services, Petitioners maintain that MCC should be the one seeking negotiations.

All good points.

Moreover, if taken to its extreme, Petitioners claim that Sprint's position would mean that every vendor whose services are incorporated into a telecommunications service is a "telecommunications carrier." This could not only allow every vendor in the industry to demand negotiations, Petitioners point out, it would also impose a number of regulatory burdens on vendors that have no ability to meet those burdens. Nor, according to Petitioners, does it make sense that a carrier that is certificated to provide telecommunications services somewhere (or even actually provides telecommunications services somewhere) is therefore entitled to negotiate agreements everywhere. In order for Section 251 to make practical sense, Petitioners contend that it must be limited to negotiations with carriers that have some plan to be a telecommunications carrier and provide telecommunications services within the serving area of the LEC with which they seek to negotiate. Petitioners insist that Sprint simply does not meet those threshold conditions, whether measured under the terms of the Federal Act as interpreted by the FCC and federal courts or measured by a simple common sense reading of the obligations of the Federal Act.

Because Sprint will not be acting as a telecommunications carrier providing telecommunications services within the meaning of the Federal Act, Petitioners maintain that Sprint is the wrong entity to be negotiating the reciprocal compensation and local number portability arrangement that Sprint is seeking. Petitioners characterize Sprint's claim to be a telecommunications carrier and its reliance on MCC's intent to provide broadband voice information services in competition with Petitioners as a shell game. They state that the only role Sprint truly proposes to play under the agreement it proposes to negotiate with them is as private vendor to MCC.

So that their position is clear, Petitioners expressly state that they have no objection to the "business arrangement" that they understand to exist between Sprint and MCC. If MCC, whether directly or through its affiliates, intends to provide telecommunications services and be a telecommunications carrier in Illinois and in their respective serving areas, Petitioners asserts that this entire issue would be avoided if, as the Federal Act contemplates, MCC initiated the negotiation process with them. Petitioners contend that the absence of the purported local service provider overshadows what services Sprint may or may not provide. In their opinion, there is no apparent legitimate reason not to impose on the purported service provider the obligation to initiate and conduct negotiations and be a party to the resulting agreement, no matter whether it intends to self-provision or rely on third parties such as Sprint.

B. Sprint's Position

Sprint maintains that Petitioners are obligated by the Federal Act to interconnect with it and provide number portability and establish reciprocal compensation arrangements despite the fact that MCC is the entity directly serving the end-user. Sprint relates that it has entered into agreements with telecommunications service providers that intend to compete with the Petitioners' local voice services. These agreements require Sprint to provide certain services, including but not limited to number acquisition and administration, telephone number assignment, including local routing numbers, port requests, switching, and transport of local calls, and exchange access to and from the PSTN, including calls to 9-1-1 for end-users.

Like Petitioners, Sprint too relies on the definition of "telecommunications service" in Section 153(46) of the Federal Act to support its position. Sprint emphasizes the latter part of the definition ("..., or to such class of users as to be effectively available directly to the public, ...") and notes the PUCO's recent decision relying on this portion of the definition.[5] As discussed above, the PUCO rejected arguments similar to those raised by Petitioners in a case involving services similar to those which Sprint intends to provide to MCC. The PUCO specifically found that MCI was a telecommunications carrier and that the rural incumbent LECs had a duty to interconnect with MCI. The PUCO also concluded that MCI was acting in a role no different than other telecommunications carriers whose network could interconnect with the rural incumbent LECs so that traffic is terminated to and from each network and across networks. Like MCI, Sprint contends that its proposed interconnection with

[5] See Footnote No. 4.

Petitioners places it in the same position as other intermediate carriers whose interconnections terminate traffic to and from each network and across networks. Because its services will be effectively available to the public (through MCC), Sprint maintains that it is a telecommunications carrier offering telecommunications services.

Because it is telecommunications carrier, Sprint argues further that Section 251(a) of the Federal Act establishes an independent basis for interconnection. Section 251(a) requires each telecommunications carrier to interconnect directly or indirectly with the facilities and equipment of other telecommunications carriers. Sprint reports that neither subsection (f)(1) nor (f)(2) of Section 251 provide Petitioners with an exemption from their obligation to allow for direct or indirect interconnection. Moreover, Sprint points out that it has not requested interconnection pursuant to Section 251(c). In this regard, Sprint is a facilities-based carrier that does not require access to Section 251(c) provisions such as unbundled network elements, collocation, and resale. Sprint states that it is much like a wireless carrier in that it owns all of its own facilities and, therefore, does not need to take advantage of the rights granted to telecommunications carriers under Section 251(c) to use an incumbent LEC's network to compete against the incumbent LEC.

Sprint adds that Section 251(a) does not specifically mention the types of traffic to be exchanged nor does it exclude certain types of traffic. In this regard, Sprint states that Congress has provided definitions of not only "telephone exchange service," but also "telephone toll service."[6] Congress, Sprint continues, could easily have excluded any one of these services or limited Section 251(a)'s applicability to any one of these services, but it did not. Sprint contends that Petitioners may not, therefore, impose a restriction on Sprint that is not contained in the statute. To allow Petitioners to do so, Sprint argues, would undermine one of the enduring tenants of statutory construction – that is – to give effect, if possible, to every clause and word of a statute. Accordingly, Sprint concludes that Petitioners must interconnect either directly or indirectly with it for the exchange of local traffic pursuant to Section 251(a).

Not only does the plain language of Section 251(a) require Petitioners to interconnect with Sprint independent of Section 251(c), Sprint observes that it appears the Commission has approved an agreement between Geneseo Telephone Company and a wireless carrier, Nextel Partners, that contains terms for both direct and indirect interconnection and reciprocal compensation without reference to Section 251(a) of the Federal Act.[7] Of particular interest to Sprint is the part of the agreement that requires the originating party to pay any transiting charges when the parties exchange traffic on an indirect basis.[8] Sprint states that this is exactly the type of arrangement Sprint seeks to enter with Petitioners. Sprint is adamant that Petitioners should not be permitted to

---

[6] 47 U.S.C. §§ 153(47) and 153(48).
[7] *See* Order entered on April 21, 2004 and Amendatory Order entered on May 26, 2004 in Docket No. 04-0120; *NPCR, Inc. d/b/a Nextel Partners, as agent for Nextel WIP License. Corp. and Nextel WIP Extension Corp. and Geneseo Telephone Company; Joint Petition for Approval of Interconnection Agreement between Geneseo Telephone Company and NPCR, Inc. pursuant to 47 U.S.C. § 252.*
[8] See *Id* at Section 4.5.

discriminate against it. Indeed, Sprint insists, any such discrimination would be antithetical to the FCC's policy pronouncement that "all telecommunications carriers that compete with each other should be treated alike regardless of the technology used..."[9] Both it and Nextel Partners, Sprint points out, are telecommunications carriers that are obligated to comply with and are entitled to all the rights and privileges that result from Section 251(a).

C. Commission Conclusion

Sprint and MCC's interest in competing in certain of the more rural exchanges in Illinois is significant in that it represents one of the first, if not the first, competitive landline ventures into the relevant exchanges. Unfortunately for Sprint, however, *Virgin Islands Telephone* compels the Commission to conclude that Sprint is not providing a telecommunications service, as that term is defined in Section 153(46) of the Federal Act. As noted by Petitioners, the D.C. Circuit Court concluded that making telecommunications "effectively available directly to the public" so as to constitute a telecommunications service can not be done through a third party that is the entity actually/directly serving the public. Because, in this situation, Sprint is not serving the public directly and instead is providing its services to MCC, which is the entity directly serving the public (albeit through the services procured from Sprint), the Commission finds itself bound by the *Virgin Islands Telephone* decision and concludes that Sprint is not providing a telecommunications service. Since Sprint is not providing a telecommunications service under the *Virgin Islands Telephone* decision, Sprint is not a telecommunications carrier with which Petitioners must negotiate local number portability and reciprocal compensation under subsections (a) and (b) of Section 251 of the Federal Act.

The Commission recognizes that its decision is contrary to that of the PUCO cited above. The Commission can not explain the PUCO's decision. The Commission notes, however, that neither the PUCO's January 26, 2005 Finding and Order nor its April 13, 2005 Order on Rehearing cite or discuss the *Virgin Islands Telephone* decision.

In coming to this conclusion, the Commission in no way wishes to discourage those who would like to offer competitive local exchange services to Illinois' more rural telephone customers. Nor should this statement or any other aspect of this Order, however, be construed as an indication as to how the Commission would rule on a future request for a suspension or modification pursuant to Section 251(f)(2) of the Federal Act. The Commission continues to urge all Illinois telecommunications carriers to cooperate in providing competitive telecommunications services to consumers.

---

[9] *Implementation of the Local Competition Provisions of the Telecommunications Act of 1996*, CC Docket Nos. 96-98, 95-185, First Report and Order, 11 FCC Rcd 15499, ¶ 993 (1996) (*Local Competition Order*) (subsequent history omitted).

V. FINDINGS AND ORDERING PARAGRAPHS

The Commission, having considered the entire record herein, is of the opinion and finds that:

(1) Petitioners provide local exchange telecommunications services as defined in Section 13-204 of the Act;

(2) the Commission has jurisdiction over the parties hereto and the subject matter hereof;

(3) the facts recited and conclusions reached in the prefatory portion of this Order are supported by the record and are hereby adopted as findings of fact and law;

(4) as rural telephone companies, Petitioners possess a rural exemption under Section 251(f)(1)(A) of the Federal Act from the requirements of Section 251(c) of the Federal Act;

(5) in light of Petitioners' exemption from the requirements of Section 251(c) of the Federal Act, the Commission need not rule on Petitioners' requests regarding its obligations under Section 251(c);

(6) given the manner in which Sprint proposes to serve MCC, Sprint is not a telecommunications carrier in this instance with which Petitioners must negotiate under subsections (a) and (b) of Section 251 of the Federal Act;

(7) in light of resolution of the issues, no ruling regarding Petitioners' requests under Section 251(f)(2) of the Federal Act is necessary; and

(8) all motions, petitions, objections, and other matters in this proceeding which remain unresolved should be disposed of consistent with the conclusions herein.

IT IS THEREFORE ORDERED by the Illinois Commerce Commission that because Sprint Communications, L.P. d/b/a Sprint Communications Company L.P. is not a "telecommunications carrier" in the context of its relationship with MCC Telephony of Illinois, Inc., Petitioners have no obligation to negotiate with Sprint Communications, L.P. d/b/a Sprint Communications Company L.P., or any similarly situated entity, under subsections (a) and (b) of Section 251 of the federal Telecommunications Act.

IT IS FURTHER ORDERED that all motions, petitions, objections, and other matters is this proceeding which remain unresolved are disposed of consistent with the conclusions herein.

IT IS FURTHER ORDERED that subject to the provisions of 83 Ill. Adm. Code 200.880, this Order is final; it is not subject to the Administrative Review Law.

DATED: May 13, 2005

Briefs on Exceptions must be received by May 19, 2005.
Briefs in Reply to Exceptions must be received by May 25, 2005.

Administrative Law Judge

Nebraska Public Service Commission

:NERS:
. BOYLE
)WELL C. JOHNSON
)D JOHNSON
RANK E. LANDIS
ERALD L. VAP

XECUTIVE DIRECTOR:
NDY S. POLLOCK

300 The Atrium, 1200 N Street, Lincoln, NE 68508
Post Office Box 94927, Lincoln, NE 68509-4927
Website: www.psc.state.ne.us
Phone: (402) 471-3101
Fax: (402) 471-0254

NEBRASKA CONSUMER HOTLINE:
1-800-526-0017

July 15, 2005

AMENDED CERTIFICATION

To Whom It May Concern:

I, Andy S. Pollock, Executive Director of the Nebraska Public Service Commission, hereby certify that the enclosed is a true and correct copy of the original order made and entered in C-3429 on the 12th of July, 2005. The original order is filed and recorded in the official records of the Commission.

IN TESTIMONY WHEREOF, I have hereunto set my hand and affixed the Seal of the Nebraska Public Service Commission, Lincoln, Nebraska, this 12th day of July, 2005.

Sincerely,

Andy S. Pollock
Executive Director

ASP:ab

Enclosure

cc Diane C. Browning, 6450 Sprint Parkway, Mailstop KSOPHN0212-2A511, Overland Park, KS 66251
Bradford E. Kistler, Kinsey Ridenouer Becker & Kistler, LLP, 601 Lincoln Square, 121 S. 13th St., Lincoln, NE 68501
Elizabeth A. Sickel, Southeast Nebraska Telephone Co., 110 W. 17th St., Falls City, NE 68355
Paul M. Schudel, Woods & Aiken, LLP, 301 S. 13th St., Ste. 500, Lincoln, NE 68508
James Overcash, #18627, Woods & Aitken, LLP, 301 South 13th Street, Suite 500, Lincoln, NE 68508
Thomas J. Moorman, DC Bar No. 384790, KRASKIN, MOORMAN & COSSON, LLC, 2120 L Street, NW 520, Washington, DC 20037

Printed with soy ink on recycled paper

BEFORE THE NEBRASKA PUBLIC SERVICE COMMISSION

In the Matter of Sprint Communications Company L.P., Overland Park, Kansas, Petition for Arbitration under the Telecommunications Act, of certain issues associated with the proposed interconnection agreement between Sprint and Southeast Nebraska Telephone Company, Falls City.	APPLICATION NO. C-3429 PROTECTIVE ORDER Entered: July 12, 2005

0100

BY THE COMMISSION:

This matter comes before the Commission in anticipation that the parties hereto will exchange or offer into evidence Confidential Information, as defined below. The Commission upon consideration, and being otherwise fully advised, finds that a protective order should be entered. The following protective order is hereby entered with respect to all confidential information contained in the above-captioned application or filed by any of the parties in any proceedings in this application or produced in discovery.

1. Confidential Information: All documents and information (including confidential information in computer storage media or devices of every type or description) filed with the Commission or furnished to other parties as part of testimony or briefs or pursuant to any requests for information, subpoenas, or other modes of discovery (formal or informal), and including depositions, that are claimed to be of a trade secret, proprietary, or confidential nature (hereinafter referred to as confidential information) shall be so marked by the party so claiming, by stamping the same with a designation indicating its trade secret, proprietary or confidential nature. Confidential information should also be copied onto yellow paper if practical. Access to and review of confidential information shall be strictly controlled by the terms of this order. A producing party's inadvertent failure to designate any material produced in discovery as "confidential" will not be deemed a waiver of such a claim of confidentiality. Upon discovery of the inadvertent failure to designate, the producing party may correct the error by providing to the receiving party(ies) written notice and an additional copy of the material marked "confidential," in which case the receiving party(ies) will return or destroy the material inadvertently produced. If a party inadvertently produces a document it later discovers to be

Printed with soy ink on recycled paper

covered by the attorney-client privilege, work product, or other applicable privilege or immunity, the production will not be deemed to constitute a waiver of applicable privilege(s).

2. Nondisclosure Agreement: No access to confidential information shall be authorized under the terms of this order to any person until the person desiring access to such information signs a nondisclosure agreement in the form that is attached hereto and incorporated herein as "Exhibit A." The nondisclosure agreement (Exhibit A) shall require the person to whom disclosure is to be made to certify in writing that he or she has read this order and agrees to be bound by its terms and conditions. The agreement shall contain the signatory's full name, permanent address and employer, and the name of the party with whom the signatory is associated. Such agreement shall be filed with the Commission and served on all parties to this proceeding.

3. Availability to the Commission and Parties: Confidential information shall be accessible to the Commission, Commission counsel, and Commission staff members and shall not be used or disclosed except for the purpose of conducting, issuing orders in, and otherwise participating in, this proceeding. Confidential information shall be disclosed to a party's counsel, witnesses, or experts only as follows:

a. Except as set forth in paragraph 3(f), confidential information may not be disclosed to any individual who has marketing, pricing, product development, market analysis, market entry, or strategic planning responsibilities for (i) any party to this proceeding or any competitor of a party; or (ii) any person employed by or reasonably anticipated to be employed by a party or a competitor of a party, or any person who will have those responsibilities in the foreseeable future.

b. Prior to receipt of confidential information, the individual seeking disclosure shall provide to the disclosing party an executed nondisclosure agreement.

c. If the disclosing party believes in good faith that disclosure should not be made to any person seeking confidential information pursuant to paragraph 4, the disclosing party may respond to the notice by filing a written objection. If the parties cannot resolve the dispute informally, the matter shall be submitted to the Commission by motion. Disclosure of confidential information is not required pending resolution by the Commission.

d. If any party believes that, due to the highly sensitive nature of any information to be disclosed in this proceeding, the provisions of this protective order do not provide sufficient protection, the disclosing party may apply to the Commission for extraordinary protection.

e. While in the custody of the Commission, the original and all copies of material containing information claimed under this order to be confidential shall be kept in a sealed envelope or box, which envelope or box is marked "CONFIDENTIAL--SUBJECT TO PROTECTIVE ORDER IN APPLICATION NO. C-3429."

f. Any counsel of record or employee of a party participating in this proceeding who has marketing, pricing, product development, market analysis, market entry, or strategic planning responsibilities for any party to this proceeding shall be entitled to review confidential information subject to signing the nondisclosure agreement and will strictly limit the use of such information solely to this proceeding, or for preparation of and conduct of any appeals or subsequent FCC filing arising directly from this proceeding.

g. Segregation of Files: The materials containing the confidential information and proceedings and orders of the Commission with regard thereto will be sealed and marked as provided in this order of the Commission, segregated in the files of the Commission and withheld from inspection by any person except under the conditions established in this order, unless such confidential information is released from the restrictions of this order either through agreement of the parties or, after notice to the parties and hearing, pursuant to the order of the Commission and/or final order of a court having jurisdiction.

h. Preservation of Confidentiality: No persons who are afforded access to any confidential information by reason of this order shall use or disclose the confidential information for purposes of business or competition, or any other purpose other than the purpose of preparation of and conduct of this proceeding, or for preparation of and conduct of any appeals or subsequent FCC filing arising directly from this proceeding. Persons afforded access to confidential information shall use such information solely as contemplated herein, and shall take all reasonable precautions to keep the confidential information secure as trade secret, confidential or proprietary information and

Printed with soy ink on recycled paper

in accordance with the purposes and intent of this order. No person may copy, microfilm, microfiche or otherwise reproduce the information without the written consent of the party claiming protection except for his or her own use, or the use of persons permitted access to the information and who have signed a nondisclosure agreement.

i. Use of Confidential Material: In the event any party intends to use or uses information obtained pursuant to the nondisclosure agreement under this protective order in testimony, exhibits, discovery or discovery responses, cross-examination, briefs or any other pleading or document to be filed in this proceeding, the following shall apply:

1. Testimony, briefs or other pleadings containing the information claimed to be confidential shall be filed under seal with the Commission by the party preparing and using the same in sealed envelopes or other appropriate containers, which shall be prominently marked with the legend "CONFIDENTIAL--SUBJECT TO PROTECTIVE ORDER IN APPLICATION NO. C-3429." A copy thereof shall be served on the parties who have signed nondisclosure agreements. The complete document containing the protected material shall not be filed in the public record.

2. The pages of the documents which contain information claimed to be confidential shall be clearly marked.

3. Any party who has not executed a nondisclosure agreement shall receive a copy of the documents from which information claimed to be protected has been omitted.

j. Testimony, exhibits and discovery responses containing the information claimed to be confidential shall be filed under seal with the Commission by the party preparing and using the same in sealed envelopes or other appropriate containers, which shall be prominently marked with the legend, "CONFIDENTIAL-- SUBJECT TO PROTECTIVE ORDER IN APPLICATION NO. C-3429." A copy thereof shall be served on the parties who have signed nondisclosure agreements. The complete document containing the protected material shall not be filed in the public record. Any party who has not executed a nondisclosure agreement shall receive a copy from which information claimed to be protected has been omitted.

0103

k. In the course of this proceeding, any hearings during which documents or information obtained pursuant to the terms of this order are likely to be disclosed shall be conducted in camera, attended only by persons authorized to have access to such information under this order, provided that there has been no prior Commission determination that the documents or information in question are not confidential. The transcript of such in camera proceedings shall be kept under seal.

4. Access to Record:

a. General: Access to sealed testimony, records and information shall be limited to the Commission and persons who have signed the nondisclosure agreement set for in Exhibit A, unless such information is released from the restrictions of this order either through agreement of the parties or after notice to the parties and hearing, pursuant to the order of the Commission or the final order of a court having final jurisdiction.

b. Appeal: Sealed portions of the record in this proceeding may be forwarded to any court of competent jurisdiction for purposes of an appeal, but under seal as designated herein for the information and use of the court. If a portion of the record is forwarded to a court under seal for the purposes of an appeal, the providing party shall notify all parties which portion of the sealed record has been designated as necessary to the record on appeal.

5. Continuation of Protection: Unless otherwise ordered, confidential information, including transcripts of any depositions to which a claim of confidentiality is made, shall remain under seal and shall continue to be subject to the protective requirements of this order after final settlement or conclusion of this matter, including administrative or judicial relief thereof.

6. Challenge to Confidentiality: This protective order establishes a procedure for the expeditious handling of information that a party claims is confidential; it shall not be construed as an agreement or ruling on the confidentiality of any document. In the event that any party challenges a claim for protection under this protective order, the party objecting to the removal of the confidential designation bears the burden of demonstrating the harm that would result from public disclosure of the material for which protection is sought. Any party may

Printed with soy ink on recycled paper

challenge the characterization of any document or specific information claimed by the providing party to be confidential in the following manner:

a. A party challenging the confidentiality of any materials pursuant to this order shall first contact counsel for the providing party and attempt to resolve any differences informally;

b. If the parties cannot resolve the disagreement informally, the party challenging the claim for protection shall do so by filing a motion with the Commission, which identifies with specificity, the material challenged and requests a ruling whether a document or information is confidential.

c. Within three business days of service of a motion for determination of confidentiality, the party claiming confidentiality shall deliver under seal all of the relevant documents and information to the Commission for an in camera inspection by the Commission or its designated hearing officer.

d. A ruling on the confidentiality of the challenged document or specific information shall be made by the Commission after an in camera hearing which shall be conducted under circumstances such that only those persons duly authorized hereunder to have access to such confidential materials shall be present. Such hearing shall be held as expeditiously as is practicable following delivery of the relevant documents and information to the Commission.

e. The record of said in camera hearing shall be marked "CONFIDENTIAL -- SUBJECT TO PROTECTIVE ORDER IN APPLICATION NO. C-3429." Court reporter notes of such hearing shall be separately bound, segregated, sealed and withheld from inspection by any person who has not executed a nondisclosure agreement in accordance with this order.

f. If the Commission rules that any document or specific information should be removed from the restrictions imposed by this order, no party shall disclose such document or specific information, or use it in the public record for five business days unless authorized by the providing party to do so. The provisions of this subparagraph are entered to enable the party claiming protection to seek a stay or other relief from the Commission's order denying that party such protection.

7. Return of Documents: Confidential information provided pursuant to this protective order shall be returned to the disclosing party within 30 days of the conclusion of the proceeding or any appeal.

8. Responses to Subpoena or Order: If any person receiving confidential information receives a subpoena or order for production of confidential information produced under the terms of this order, that person shall promptly notify the affected party's counsel after receiving the subpoena or order and before the documents are produced, identifying the date and location of the ordered or requested production.

9. Damages: Any person who violates this protective order by reason of unauthorized use, or disclosure or failure to keep the information confidential may be liable for damages and penalties as provided by law.

O R D E R

IT IS THEREFORE ORDERED by the Nebraska Public Service Commission that the terms and conditions of the protective order be, and hereby are, as set forth herein.

MADE AND ENTERED at Lincoln, Nebraska, this 12th day of July, 2005.

Nebraska Public Service Commission

Commissioners Concurring:

//s// Rod Johnson
//s// Frank E. Landis
//s// Gerald L. Vap

Chairman

Attest:

Executive Director

Printed with soy ink on recycled paper

Printed with soy ink on recycled paper

EXHIBIT A

BEFORE THE NEBRASKA PUBLIC SERVICE COMMISSION

In the Matter of Sprint Communications Company L.P., Overland Park, Kansas, Petition for Arbitration under the Telecommunications Act, of certain issues associated with the proposed interconnection agreement between Sprint and Southeast Nebraska Telephone Company, Falls City.	APPLICATION NO. C-3429

NONDISCLOSURE AGREEMENT

I hereby certify that I am familiar with the terms and conditions of the Protective Order entered by the Commission in the above-captioned docket and agree to be bound by the terms and conditions thereof.

I further agree that the information requested shall be used only for the valid purposes of these proceedings as provided in said Order.

DATED this _____ day of _____, 2005.

Signature: _____

Name (type or print) _____

Address and Telephone: _____

_____

_____

Representing: _____

Position: _____

Printed with soy ink on recycled paper

Printed with soy ink on recycled paper

RECEIVED
JUL 25 2005
NEBRASKA PUBLIC SERVICE COMMISSION

BEFORE THE NEBRASKA PUBLIC SERVICE COMMISSION

IN RE:	)	
SPRINT COMMUNICATIONS	)	
COMPANY L.P. PETITION FOR	)	**APPLICATION NO. C-3429**
ARBITRATION UNDER THE	)	
TELECOMMUNICATIONS ACT	)	

SOUTHEAST NEBRASKA TELEPHONE COMPANY'S EXHIBIT DESIGNATIONS

Southeast Nebraska Telephone Company ("SENTCO") hereby identifies and designates the following exhibits in accordance with the Planning Conference Order entered herein by the Hearing Officer on June 28, 2005:

#	Description	Offered	Accepted
1	Petition for Arbitration, Application No. C-3429, May 23, 2005, filed by Sprint Communications Company L.P. ("Sprint")		
2	Motion to Dismiss or, in the Alternative, Response of Southeast Nebraska Telephone Company to Petition for Arbitration, Application No. C-3429, filed June 17, 2005 by Southeast Nebraska Telephone Company ("SENTCO")		
3	Direct Testimony of Elizabeth A. Sickel, Application C-3204, filed July 25, 2005, with attachment		
4	Correspondence from Paul Schudel to Monica Barone dated January 12, 2005		
5	Sprint's Amended Application for Statewide CLEC Authority, Application No. C-3204, filed with the Nebraska Public Service Commission and dated July 16, 2004		
6	Sprint's Responses to Intervenors' Data Requests, Application No. C-3204, dated September 21, 2004.		
7	Sprint's Confidential Responses to Intervenors' Data Requests, Application No. C-3204, dated September 21, 2004, including Supplements and including Wholesale Voice Services Agreement between Time Warner Cable Inc. and Sprint Communications Company, L.P. dated December 5, 2003		
8	Pre-filed Testimony of James R. Burt, Application No. C-3204, dated October 1, 2004		
9	Pre-filed Testimony of Dr. Brian K. Staihr, Application No. C-3204, dated October 1, 2004		
10	Transcript of hearing held on November 4, 2004, Application No. C-3204		
11	Post-Hearing Comments of Sprint, Application No. C-3204, dated January 3, 2005		
12	Application and Request of Time Warner Cable Information		

#	Description	Offered	Accepted
12	Application and Request of Time Warner Cable Information Services (Nebraska), LLC d/b/a Time Warner Cable ("Time Warner") for Statewide CLEC Authority, Application No. C-3228, filed with the Nebraska Public Service Commission, dated June 17, 2004, with attachments		
13	Time Warner's Responses and Objections to Data Requests of Commission Staff and Interveners, Application No. C-3228, dated September 1, 2004		
14	Pre-Filed Testimony of Julie Y. Patterson, Application No. C-3228, dated September 1, 2004		
15	Pre-Filed Testimony of Steven E. Watkins, Application No. C-3228, filed September 16, 2004		
16	Transcript of Hearing, Application No. C-3228, September 17, 2004		
17	Time Warner's Post-Hearing Brief, Application No. C-3228, dated October 7, 2004		
18	Sprint Communications Company, L.P. Tariffs filed with the Nebraska Public Service Commission		
19	Time Warner Cable Information Services, LLC d/b/a Time Warner Cable, Nebraska Tariffs filed with the Nebraska Public Service Commission		
20	Sprint Communications Company, L.P. Responses to Southeast Nebraska Telephone Company's First Set of Interrogatories, Requests to Produce Documents and Requests for Admissions dated July 14, 2005, with attachments		

DATED: July 25, 2005.

SOUTHEAST NEBRASKA TELEPHONE COMPANY

By: _____

Paul M. Schudel, No. 13723
James A. Overcash, No. 18627
WOODS & AITKEN LLP
301 South 13th St, Ste 500
Lincoln, NE 68508
(402) 437-8500

and

Thomas J. Moorman, D.C. Bar No. 384790
KRASKIN, MOORMAN & COSSON, LLC
2120 L Street, N.W., Suite 520
Washington, D.C. 20037
(202) 296-8890
Its Attorneys

CERTIFICATE OF SERVICE

I hereby certify that true and correct copies of the foregoing **SOUTHEAST NEBRASKA TELEPHONE COMPANY'S** were sent by First-Class U.S. Mail and electronic mail on July 25, 2005, to the following:

Diane C. Browning
6450 Sprint Parkway,
Mailstop KSOPHN0212-2A511
Overland Park, KS 66251

Shana Knutson
Nebraska Public Service Commission
300 The Atrium
1200 N Street
Lincoln, NE 68508

_____
Paul M. Schudel

BEFORE THE NEBRASKA PUBLIC SERVICE COMMISSION

DIRECT TESTIMONY

OF

JAMES R. BURT

Application No. C-3429

July 25, 2005

0113

RECEIVED
JUL 27 2005
NPSC-Comm. Dept.

TABLE OF CONTENTS

		PAGE
I.	Mr. Burt's professional background.	1
II.	This testimony describes the type of telecommunications service Sprint proposes to provide in SENTCO's serving territories, the network Sprint will use to provide this service, and how Sprint qualifies for interconnection under the Telecommunications Act of 1996.	3
III.	Sprint's business model proposes to bring a new competitive voice service to SENTCO's serving territories.	4
IV.	Sprint's business model utilizes the combined resources of two service providers to bring cost-effective new voice telecommunications services to Nebraska customers sooner than if either service provider attempted to provide the service alone.	5
V.	Sprint's business model is wholly consistent with the pro-competition goals of Telecommunications Act of 1996.	10
VI.	In the Sprint business model, Sprint provides the same switching and interconnection capabilities that it provides for its other telecommunications services, while the loop connection to the customer is provided by another service provider.	15
VII.	Under Sprint's business model, the customer receives a voice service, not a cable modem service or an Internet Telephony (VoIP) service.	17
VIII.	Sprint is entitled to reciprocal compensation from SENTCO for the voice calls that SENTCO's customers terminate on the Sprint network.	19
IX.	The Commission already has approved at least one arrangement similar to the one for which Sprint is seeking interconnection with SENTCO.	22
X.	Sprint offers its services indiscriminately.	24
XII.	Sprint has attempted to negotiate with SENTCO an interconnection agreement that is similarly situated to SENTCO's existing approved agreement with SENTCO.	27
XII.	Sprint's position on arbitration issues 1 and 2.	30

0114

1 **I. MR. BURT'S PROFESSIONAL BACKGROUND**

2 **Q. Please state your name, business address, employer and current position.**

3 A. My name is James R. Burt. My business address is 6450 Sprint Parkway,
4 Overland Park, KS 66251. I am employed as Director – Regulatory Policy for
5 Sprint/United Management Company.
6

7 **Q. Please summarize your educational and professional background.**

8 A. I received a Bachelor of Science degree in Electronics Engineering from the
9 University of South Dakota in 1980 and a Masters in Business Administration
10 from Rockhurst College in 1989.
11

12 I became Director – Regulatory Policy in February of 2001. I am responsible for
13 developing state and federal regulatory policy and legislative policy for Sprint
14 Corporation, including the coordination of regulatory and legislative policies
15 across the various Sprint business units and the advocacy of such policies before
16 regulatory and legislative bodies.
17

18 From 1997 to February of 2001, I was Director-Local Market Planning. I was
19 responsible for policy and regulatory position development and advocacy from a
20 CLEC perspective. In addition, I supported Interconnection Agreement
21 negotiations and had responsibility for various other regulatory issues pertaining
22 to Sprint's CLEC efforts.
23

24 From 1996 to 1997, I was Local Market Director responsible for Sprint's
25 Interconnection Agreement negotiations with BellSouth.
26
27 I was Director – Carrier Markets for Sprint's Local Telecom Division from 1994
28 to 1996. My responsibilities included inter-exchange carrier account management
29 and management of one of Sprint's Inter-exchange Carrier service centers.
30
31 From 1991 to 1994, I was General Manager of United Telephone Long Distance,
32 a long distance subsidiary of Sprint/United Telephone Company. I had P&L,
33 marketing and operations responsibilities.
34
35 From 1989 to 1991, I held the position of Network Sales Manager responsible for
36 sales of business data and network solutions within Sprint's Local Telecom
37 Division.
38
39 From 1988 to 1989, I functioned as the Product Manager for data and network
40 services also for Sprint's Local Telecom Division.
41
42 Prior to Sprint I worked for Ericsson Inc. for eight years with positions in both
43 engineering and marketing.
44

45 **Q. Have you testified before any regulatory commissions?**

46 **A.** Yes. I have testified in Georgia, Louisiana, Pennsylvania, Maryland, Illinois,
47 Nebraska, Florida and Iowa, and have supported the development of testimony in
48 many other states.

49

50 **Q. On whose behalf are you testifying?**

51 **A.** I'm testifying on behalf of Sprint Communications Company L.P (hereafter
52 referred to as "Sprint").

53

54 **II. THIS TESTIMONY DESCRIBES THE TYPE OF**
55 **TELECOMMUNICATIONS SERVICE SPRINT PROPOSES TO**
56 **PROVIDE IN SENTCO'S SERVING TERRITORIES, THE NETWORK**
57 **USED TO PROVIDE THIS SERVICE, AND HOW SPRINT QUALIFIES**
58 **FOR INTERCONNECTION UNDER THE TELECOMMUNICATIONS**
59 **ACT OF 1996.**
60
61 **Q. What is the purpose of your testimony?**

62 **A.** The purpose of my testimony is to:

63 • Describe the facilities-based local voice telephone service that Sprint, together
64 with other competitive service providers such as Time Warner Cable
65 ("TWC"), seeks to offer to all customers of such services in Nebraska, and
66 more specifically, the areas served by Southeast Nebraska Telephone
67 Company ("SENTCO").

68 • Explain to the Commission the precise manner in which Sprint and the other
69 service providers plan to cooperate to offer competitive local voice service to
70 customers in SENTCO local service territories, to explain to the Commission

71 that the service is not a private service, but will be offered to the public,
72 without restriction, and to explain that Sprint intends to offer its
73 interconnection services to all entities in the applicable class (i.e., all entities
74 who desire the services and who have comparable "last mile" facilities to the
75 cable companies);

76 • Describe the network configuration Sprint plans to utilize to serve customers
77 in SENTCO's local service areas;

78 • Explain the policy reasons why Sprint believes that the business model it
79 seeks to employ with TWC to allow facilities-based local voice services to be
80 offered in competition with SENTCO supports the pro-competitive purposes
81 of the Communications Act of 1934, as amended by the Telecommunications
82 Act of 1996, 47 U.S.C. §151 *et seq.* (the "Act");

83 • Contrast the nature of Sprint's services with cable modem Internet services
84 and Voice Over Internet Protocol ("VoIP") services; and

85 • Address Sprint's positions as to Arbitration Issues 1 and 2.

86

87 **III. SPRINT'S BUSINESS MODEL PROPOSES TO BRING A NEW**
88 **COMPETITIVE VOICE SERVICE TO SENTCO'S SERVING**
89 **TERRITORIES.**
90

91 **Q. Can you describe your understanding of the current competitive**
92 **environment in SENTCO serving territories?**

93 **A:** Setting aside the discussion of the proposed services that are at issue in this
94 Arbitration proceeding, currently there is little or no competition for local voice
95 telephone services in SENTCO's serving territories. SENTCO is serving most, if

96 not all, of the customers of local voice services in its territories. The larger
97 Nebraska cities such as Lincoln and Omaha have experienced some competitive
98 local exchange carrier ("CLEC") entry, by cable companies, traditional CLECs,
99 and inter-exchange carriers ("IXCs") providing local exchange services. In
100 contrast, Nebraska's rural exchanges have seen little, if any, facilities-based
101 competition.
102
103 **Q. How will Sprint's service help introduce competition into SENTCO's serving**
104 **territories?**
105 **A.** The service resulting from Sprint's business model would be one of the first, if
106 not the first, competitive landline telecommunications ventures into SENTCO's
107 serving territories. In addition, the service does not require the customer to invest
108 in a broadband connection and a computer, which the customer would have to
109 purchase to utilize a Voice over Internet Protocol ("VoIP") service. Sprint
110 believes that there is a demand in those areas for services provided by carriers
111 other than SENTCO. For example, TWC provided to Sprint the attached letter
112 from a potential subscriber of the competitive local voice service (see Exhibit
113 JRB-3).
114
115 **IV. SPRINT'S BUSINESS MODEL UTILIZES THE COMBINED**
116 **RESOURCES OF TWO SERVICE PROVIDERS TO BRING COST-**
117 **EFFECTIVE NEW VOICE TELECOMMUNICATIONS SERVICES TO**
118 **NEBRASKA CUSTOMERS SOONER THAN IF EITHER SERVICE**
119 **PROVIDER ATTEMPTED TO PROVIDE THIS SERVICE ALONE.**
120

121 **Q. Please describe the business model that Sprint has chosen to bring local voice**
122 **telephone services to Nebraska consumers in SENTCO's serving territories.**
123 **A.** Sprint has chosen to combine and leverage resources, capabilities, expertise,
124 assets and market position with other competitive service providers, including
125 TWC, to bring facilities-based competitive voice services to consumers in
126 Nebraska. These services are positioned to compete directly with urban and rural
127 ILEC services. The model is simple. Sprint provides switching; public switched
128 telephone network ("PSTN") interconnectivity including all inter-carrier
129 compensation; numbering resources, administration and porting; domestic and
130 international toll service; operator and directory assistance and numerous back-
131 office functions. In this case, TWC provides last-mile facilities to the customer
132 premise (commonly referred to as the loop), sales, billing, customer service, and
133 installation. This business model has proven to be effective in providing over
134 400,000 consumers a viable alternative to their ILEC service in 13 states. Sprint
135 is providing these services under approved interconnection agreements in Kansas,
136 Missouri, Minnesota, Illinois, Wisconsin, Ohio, Mississippi, Louisiana, Michigan,
137 Texas, New Jersey and New York. In addition, other carriers (for example, MCI)
138 are providing similar services under approved interconnection agreements in other
139 states, including Ohio, California, North Carolina, South Carolina, Tennessee and
140 Hawaii. Sprint continues to look for additional relationships similar to those
141 already established by it and competitors seeking to compete with ILECs to
142 provide local exchange services.
143

144 **Q. Please explain the relationship between Sprint and TWC in providing the**
145 **proposed voice service to Nebraska customers.**
146 A. Sprint and TWC have entered into a contract to provide facilities-based
147 competitive local and long distance voice service within several markets already
148 receiving cable TV and broadband services from TWC. These markets
149 encompass several states and include the State of Nebraska. Within the State of
150 Nebraska, TWC operates primarily in the ILEC franchise territories of Alltel,
151 Qwest, Citizens and SENTCO. To a much smaller degree TWC operates in the
152 franchise territories of four other small independent telephone companies. In fact,
153 Sprint is currently providing services identical to those it seeks to provide in
154 SENTCO territory in Lincoln, Nebraska with TWC and under an interconnection
155 agreement with Alltel. In Lincoln alone, the Sprint/TWC service has over 4,000
156 customers. In general, the business model, as Sprint refers to this arrangement,
157 requires Sprint to perform certain duties and TWC to perform certain duties.
158 Together, Sprint and TWC provide the network and functions necessary for the
159 retail offering of these competitive telecommunications services. I will discuss
160 more specifics of this business model later in my testimony.
161
162 **Q: As to the services proposed to be offered, are Sprint and TWC each the agent**
163 **of the other party?**
164 A: Although SENTCO would like to assert that Sprint and TWC must be "agents" of
165 each other, this assertion is mis-directed. As explained below, both Sprint and
166 TWC have independent obligations under their contract to provide parts of their

167 network and expertise to provide the competitive local voice products to
168 customers in SENTCO's serving territory. But as a regulated provider of toll
169 services and interexchange services in Nebraska, Sprint is required to abide by all
170 relevant regulations, orders, resolutions, and legal requirements established by the
171 Commission and the Federal Communications Commission ("FCC"). In addition,
172 the contract between Sprint and TWC obligates Sprint to abide by all local, state,
173 and federal laws and regulations and to obtain, file, and maintain all Regulatory
174 Requirements (as that term is defined by the contract) as may be required by any
175 governmental authority having jurisdiction over its business.
176
177 **Q. Why have Sprint and TWC chosen this business model?**
178 **A.** While I do not speak for TWC, I believe that one of the more important reasons
179 why Sprint and TWC have chosen this business model are because it capitalizes
180 on the resources and capabilities of both companies to allow for market entry far
181 sooner than if either TWC or Sprint were to attempt to enter the market alone.
182
183 **Q. What resources does Sprint contribute to this business model?**
184 **A.** For its part, Sprint has switches capable of providing competitive local and long
185 distance voice services, a nationwide long distance network consisting of
186 transport facilities and switches, knowledge of CLEC services, experience in
187 interconnection, number portability, dialing parity, inter-carrier compensation, an
188 operator services platform, etc., but it does not have facilities directly to the
189 customer premises in certain areas such as the SENTCO serving territory. It

190 would be expensive for Sprint to duplicate the loop facilities maintained by
191 ILECS such as SENTCO or the "loop like" facilities such as those maintained by
192 TWC, and difficult to do so using unbundled network elements ("UNEs").
193 Accordingly, the synergies of the proposed Sprint/TWC model are obvious.
194 TWC has last-mile facilities consisting of their Hybrid Fiber Coax ("HFC")
195 network and existing relationships with current video and high-speed Internet
196 customers. Sprint has over a hundred years of experience in the voice
197 telecommunications market, a robust long distance network, switches and other
198 equipment with connections to the PSTN, and years of experience negotiating
199 interconnection and provisioning facilities-based competitive voice service.
200
201 **Q. What resources does TWC contribute to this business model?**
202 **A.** TWC has facilities to customer premises and existing relationships with
203 customers. On the other hand, it is Sprint's understanding that TWC does not
204 have many of the network elements and systems to allow voice
205 telecommunications service to be provided over those facilities in ways that are
206 indistinguishable to users from Plain Old Telephone Service ("POTS"). TWC
207 does not have a switch, has not negotiated interconnection agreements with
208 ILECs, does not have a nationwide long distance network, does not have the
209 systems to bill reciprocal compensation or exchange access, and did not desire to
210 hire or develop the necessary expertise to perform many of the functions required
211 to operate a competitive local exchange carrier.
212

213 **Q. What customer benefit will result from implementation of the business model**

214 **described above?**

215 A. Implementation of this business model permits Nebraska customers in SENTCO's

216 serving areas to have a meaningful alternative for local telephone services The

217 presence of that choice, alone, might produce competitive advantages to

218 customers in the form of lower prices and better services as competitors respond

219 to the new competition offered through this business model.

220

221 **V. SPRINT'S BUSINESS MODEL IS WHOLLY CONSISTENT WITH THE**
222 **PRO-COMPETITION GOALS OF TELECOMMUNICATIONS ACT OF**
223 **1996.**

224

225 **Q. Is the business model described above consistent with the intent and**

226 **structure of the Act as you understand it?**

227 A. Yes. Although the business model described above may not be the only way to

228 bring competitive facilities-based services to customers in SENTCO territory, it is

229 a legitimate business model which qualifies for interconnection under the Act.

230 The business model being utilized by Sprint and TWC is consistent with my

231 understanding of the intent of the Act. As shown in the Preamble of the Act itself,

232 and in sections like Section 157, one of Congress' primary purposes in passing the

233 Act was to encourage competition in the local marketplace and to encourage the

234 provision of new technologies and services to the public. Sprint seeks to do just

235 that. The Act gives potential competing local exchange carriers the option: (i) of

236 self-provisioning service, (ii) reselling the telecommunications services of an

237 ILEC or other local exchange carrier, or (iii) purchasing unbundled network

238 elements from an ILEC and providing services though the use of these "leased"
239 elements.

240 **Q. Is the business model at issue here consistent with the three forms of**
241 **competition contemplated by the Act? Please explain.**

242 **A.** Yes, the business model at issue here is consistent with these three forms of
243 competition, because the Act gives new entrants considerable flexibility to choose
244 whether to use any or all of the three identified methods. A competitive entrant
245 may use resale of another carrier's services entirely, or may provide each of the
246 network elements itself by building out an entire duplicative network that mirrors
247 the ILEC traditional monopoly network facilities. On the other hand, new
248 entrants may seek a combined approach, where the carrier provides some, but not
249 all, of the network itself, and relies upon other carriers to provide other parts of
250 the network. The business model is an example of the "combined" approach
251 where some portion of facilities essential to permit local exchange services is
252 provided by Sprint and another service provider such as TWC. The end result,
253 however, is the same. The customer is permitted to place or receive a telephone
254 call from his or her premises over the PSTN. The customer thus has a choice
255 whether to use SENTCO or Sprint and another service provider such as TWC to
256 receive such services.

257

258 **Q. Before discussing the specific Sprint/TWC arrangement, can you please**
259 **describe the network elements or functions that a competitive entrant must**
260 **obtain in order to provide local service.**

261 **A.** In its simplest form, a competitive entrant must obtain three network elements or
262 functions in order to provide local service: (1) it must have access to a connection
263 to the customer premise, e.g., the last mile or the loop; (2) it must have access to
264 an end office switching function; and (3) it must be able to interconnect to the
265 PSTN which allows the calls to be routed to and from the called and calling
266 parties.
267
268 **Q. You stated above that a competitive entrant has various choices in how it**
269 **obtains each of three network elements or functions you just described.**
270 **Please explain.**
271 **A.** Yes. As I mentioned above, the Act gives competitive entrants flexibility in how
272 it obtains these three network elements or functions. It can provide them itself or
273 it can outsource them to other telecommunications carriers or the ILEC. For
274 example, to get to the customer premise, a competitive entrant can build and use
275 its own loop, purchase the loop from an ILEC, or purchase it from another service
276 provider. The same is true for switching and interconnection; the CLEC can self-
277 provision these capabilities or purchase them from the ILEC or another service
278 provider.
279
280 **Q. Please provide an example of how a competitive voice provider is allowed**
281 **under the Act to enter the market through the exclusive use of another**
282 **entity's network.**

283 **A.** There are two examples of how a competitive entrant can use the network
284 elements or functions of another entity exclusively. The first is called the
285 "Unbundled Network Element Platform," commonly referred to as UNE-P. The
286 second is resale. UNE-P is typically purchased from the ILEC. A competitive
287 entrant purchases all the network elements and functions from the ILEC,
288 combines them, brands the service as its own, and provides and bills the
289 completed service at retail to its customers. The second example involves a
290 CLEC which provides services through resale. There are two forms of resale:
291 resale of an ILEC's service or resale of a CLEC's service. In both forms of resale
292 instances, the competitive entrant purchases a completed service consisting of
293 loop, switching, and interconnection, re-brands the service as its own, and
294 provides it at retail to its customers.
295
296 **Q. Please expand on the resale example in which a competitive entrant**
297 **purchases a completed service from a CLEC and re-brands the service in its**
298 **own name for sale to its customers.**
299 **A.** The Act requires all local exchange carriers, including CLECs, to resell their
300 services. As a result of this requirement of the Act, a facilities-based CLEC
301 owning its own switch and provisioning its own local interconnection trunks
302 pursuant to a Section 251 interconnection agreement with an ILEC is required to
303 resell its service, including the local interconnection function, to any other
304 requesting carrier. In other words, assume CLEC 'A' is a facilities-based CLEC
305 with its own switch interconnected to the ILEC pursuant to a Section 251

306 agreement. CLEC 'B' has the right to resell the telecommunications services of
307 CLEC 'A'. The resulting situation would be a retail customer served by CLEC
308 'B' using the switch and interconnection trunks of CLEC 'A'. This is exactly
309 what Sprint and TWC have agreed to do. Therefore, the business model being
310 utilized by Sprint and TWC is consistent with a business model that is required in
311 the Telecom Act.
312
313 **Q. Please provide an example of the combined approach you mentioned above**
314 **and compare it to the Sprint/TWC arrangement.**
315 **A.** There are two forms of the combined approach I would like to describe and
316 compare to the Sprint/TWC arrangement.
317 Example 1: In over 30 markets across the United States, Sprint, as the retail
318 service provider, has purchased switching and interconnection from another
319 CLEC and purchased its own loops from the ILEC. This is comparable to the
320 Sprint/TWC arrangement in that Sprint is the retail provider (comparable to TWC
321 in the current situation) purchasing switching and interconnection from another
322 CLEC (comparable to Sprint's role in the current situation).
323 Example 2: Sprint has purchased unbundled network elements in the form of
324 UNE-P from another CLEC who has purchased them from the ILEC. Sprint is
325 providing retail service in this manner in over 30 states and the District of
326 Columbia. This is comparable to the Sprint/TWC arrangement because, again,
327 Sprint as the retail service provider has purchased the network elements and
328 functions necessary to provide a completed local service from another CLEC.

329

330 **Q. Is the provision of a retail service utilizing the combined networks of two**

331 **service providers a form of local competition authorized by the Act?**

332 **A.** Yes. Regardless of the scenario selected, the Act established a framework to

333 permit competitors to enter the market in a variety of ways to allow customers to

334 receive the benefits of having more choices for their telecommunications services.

335 Second, the two examples being used by Sprint that I just explained are very

336 similar to the Sprint/TWC arrangement. In both instances one carrier, Sprint, is

337 providing the retail service and another carrier is using its rights under the Act to

338 acquire UNEs and/or local interconnection and providing it to Sprint. The

339 Sprint/TWC arrangement is essentially the same but puts Sprint in the opposite

340 position of being the carrier attempting to exercise its rights to interconnect with

341 SENTCO and provide that service to TWC, the retail provider. The Sprint/TWC

342 arrangement may be the only model that will provide the consumers in

343 SENTCO's franchise territory an alternative to SENTCO itself.

344

345 **VI. IN THE SPRINT BUSINESS MODEL, SPRINT PROVIDES THE SAME**
346 **SWITCHING AND INTERCONNECTION CAPABILITIES THAT IT**
347 **PROVIDES FOR ITS OTHER TELECOMMUNICATIONS SERVICES,**
348 **WHILE THE LOOP CONNECTION TO THE CUSTOMER IS PROVIDED**
349 **BY ANOTHER SERVICE PROVIDER.**
350

351 **Q. Under this business model, which company provides the three network**

352 **elements or functions: the loop, switching and interconnection?**

353 **A.** The business model can be explained in terms of these three elements or functions

354 I described earlier. Sprint provides switching and interconnection, and TWC

355 provides the loop connecting the customer premises to Sprint's Class 5 end office
356 switch. A head end is the originating point of the video signals in a cable
357 television system.
358
359 **Q. Please describe the network configuration being deployed by Sprint and**
360 **TWC.**
361 **A.** Following is a description of the network configuration being deployed by Sprint
362 and TWC. Please refer to Exhibit JRB-1 for a diagram of what I am describing.
363 TWC's customers will have a device located in their home called an eMTA or
364 embedded Multi-media Terminal Adapter. This device connects the customer's
365 telephones and the coaxial cable that enters the home. The coaxial cable exits the
366 customer's home and terminates in TWC's head end where the television signals
367 are separated out from the voice telecommunications signals. A head end is the
368 originating point of the video signals in a cable television system. The voice
369 signals are routed to a device called a CMTS or Cable Modem Termination
370 System. The CMTS is connected to a PBX-like switch owned by TWC. This
371 device aggregates customer voice traffic for transmission to Sprint's Class 5 end
372 office switch. The Sprint Class 5 end office switch uses the calling party and
373 called party information to route the traffic to the appropriate destinations. For
374 example, if the calling party and called party are within the same local calling
375 area the call will be routed to the interconnection trunks between Sprint and the
376 ILEC for termination to the appropriate called party. If the customer dials 911,
377 the call is routed over the trunks Sprint has provisioned between the Sprint Class

378 5 end office switch to the appropriate selective router based on the physical
379 location of the customer dialing 911. The eMTA, coaxial cable, CMTS and PBX-
380 like switch are all provided by TWC. Sprint provides the Class 5 end office
381 switch. The transport between the PBX-like switch and Sprint's Class 5 switch
382 can be provided by either Sprint or TWC. Sprint is responsible for all the
383 interconnectivity to the PSTN for the termination of local, 911, toll, operator and
384 directory calls.
385

386 **VII. UNDER SPRINT'S BUSINESS MODEL, THE CUSTOMER RECEIVES A**
387 **VOICE SERVICE, NOT A CABLE MODEM SERVICE OR AN**
388 **INTERNET TELEPHONY (VOIP) SERVICE.**
389

390 **Q: Is the proposed service a cable modem service?**

391 **A.** No. The proposed service is not cable modem service, and does not provide
392 connection to the public Internet as is the case with cable modem service. Cable
393 modem service provides customers with high speed access to the Internet, over
394 the fixed cable network of the cable company. In contrast, the proposed services
395 are local voice telephone services that are indistinguishable from the Plain Old
396 Telephone Service ("POTS") provided by SENTCO and other local exchange
397 carriers. Customers can use the same type of telephones used by SENTCO
398 customers. The customers of the proposed service will only be able to originate
399 and terminate calls from the customer's premises as SENTCO's customers
400 currently do. The proposed services do not require the customer to have a
401 broadband Internet connection, and do not require a computer at either end of the

402 potential voice telephone call. The customer's "telephone number" is fixed to his
403 or her physical location, and therefore, the proposed services are not "mobile."

404 **Q. Is the proposed service an Internet Telephony or Voice over Internet**
405 **Protocol ("VoIP") service?**

406 **A.** No, the proposed service is not an Internet Telephony or VoIP service as these
407 terms are generally used in the industry. The terms Internet Telephony and/or
408 VoIP are usually used to describe voice services that utilize the public Internet.
409 An example would be the service provided by Vonage. By contrast, the proposed
410 service does not use the public Internet as its transport mechanism. Internet
411 Telephony services also tend to be nomadic services. In other words, customers
412 of Internet Telephony services can use the service wherever they have a
413 broadband Internet connection. The voice service provided by Sprint and TWC is
414 not nomadic; the customers only use the service in their homes. Internet
415 Telephony services have also struggled with providing 911 service consistent with
416 customer or public safety official expectations. The voice service provided by
417 Sprint and TWC provides reliable E-911 service in the same manner as SENTCO
418 provides E-911 to its customers.

419

420 **Q. How could any observer confuse Internet Telephony or VoIP services with**
421 **the voice service being provided by Sprint and TWC?**

422 **A.** There is one factor that is sometimes used to attempt to create confusion between
423 Internet Telephony or VoIP service and the voice service being provided by
424 Sprint and TWC. It is the fact that both services happen to use the Internet

425 protocol.[1] Since both services use the Internet protocol, there is a tendency to
426 claim (out of misunderstanding or convenience) the services are the same when
427 nothing could be further from the truth as I described above. The mere fact that
428 there is one technical similarity, use of the Internet protocol, should not lead one
429 to the conclusion that the services are the same. Doing so would be like saying
430 because a Lamborghini and a Ford Escort both utilize black rubber tires, they are
431 the same types of automobiles. They obviously use the same technology, i.e.,
432 black rubber tires to make contact with the road, but they are not the same type of
433 automobile. In fact, about the only substantial similarity is the fact that they are
434 both considered automobiles. This is also the case for Internet Telephony or VoIP
435 and the voice service being provided by Sprint and TWC, they are both voice
436 services, but the similarities beyond that are minimal and certainly should not be
437 confused in any way.
438

439 **VIII. SPRINT IS ENTITLED TO RECIPROCAL COMPENSATION FROM**
440 **SENTCO FOR THE VOICE CALLS THAT SENTCO'S CUSTOMERS**
441 **TERMINATE ON THE SPRINT NETWORK.**
442
443 **Q. Who owns and operates the Class 5 switch that performs the switching and**
444 **routing function and through which all calls originate and terminate to the**
445 **PSTN?**
446 A. Sprint owns the Class 5 switch that switches the residential subscribers' voice
447 calls. Sprint's switch performs all switching and routing functions for local,
448 domestic and foreign toll, emergency, operator assisted, directory assistance calls.

[1] The Internet protocol is part of the TCP/IP family of protocols that establish the rules or protocol that must be followed by devices connected to one another utilizing the protocol.

449 It is important to note that every call passing between the PSTN and the
450 customers of the service being provided pass through Sprint's switch. It is the
451 only device connected to the PSTN. This switch is identified in the Local
452 Exchange Routing Guide ("LERG") and is identified by a Common Language
453 Location Identifier ("CLLI") code. The Local Routing Number associated with
454 the telephone numbers assigned to the customers directs calls to Sprint's switch.
455 The Point Codes used for SS7 signaling identify Sprint's switch. Sprint is the
456 entity whose switch is performing every function associated with the
457 telecommunications services being provided. Therefore, Sprint is the ultimate
458 and only party that is interconnecting with SENTCO under this business model.
459

460 **Q. SENTCO suggests that Sprint is not entitled to reciprocal compensation**
461 **because the traffic does not originate or terminate to end users who are**
462 **customers of Sprint. Do the facts in this case support SENTCO's assertion?**
463 **A.** No, the facts I have presented and which I will expand upon do not support
464 SENTCO's assertion. The basis for reciprocal compensation does not depend on
465 who is actually serving an end user. It is based on the usage of a carrier's
466 network. Reciprocal compensation is an arrangement between two carriers in
467 which each of the two carriers receives compensation from the other carrier for
468 the transport and termination on each carrier's network of telecommunications
469 traffic that originates on the network facilities of the other carrier. Transport is
470 the transmission and any necessary tandem switching of telecommunications
471 traffic from the interconnection point between the two carriers to the terminating

472 carrier's end office switch that directly serves the called party, or equivalent
473 facility provided by a carrier other than an incumbent LEC. Termination is the
474 switching of telecommunications traffic at the terminating carrier's end office
475 switch, or equivalent facility, and delivery of such traffic to the called party's
476 premises. Termination does not include the cost of local loops.
477
478 **Q. Describe the services Sprint provides to TWC and other competitive service**
479 **providers.**
480 **A.** Sprint provides telecommunications services including, but not limited to, PSTN
481 interconnection utilizing Sprint's switch, number assignment using existing
482 numbers or by acquiring new numbers, number administration functions including
483 the filing of number utilization reports (NRUF) with the North American
484 Numbering Plan Administrator (NANPA). Sprint will also perform the porting
485 function, whether the port is from the ILEC or a CLEC to Sprint or vice versa.
486 Sprint will also be responsible for all inter-carrier compensation including
487 exchange access and reciprocal compensation. Sprint will be responsible for such
488 direct end-user services as operator services, directory assistance and directory
489 assistance call completion. Sprint will also provision 911 circuits to the
490 appropriate Public Safety Answering Points (PSAP) through the ILEC selective
491 routers, perform 911 database administration, and negotiate contracts with PSAPs
492 where necessary. Sprint will place directory listings on behalf of the end-user
493 customers in the ILEC or third-party directories. In addition, it should be noted
494 that exchange access is part of the service Sprint provides to the general public

495 and the service Sprint provides to TWC and similarly situated providers. The
496 exchange access is provided directly in Sprint's name, on all toll calls made and
497 received by the customers. Sprint provides exchange access, which is
498 unquestionably a telecommunications service, indiscriminately, regardless of who
499 the toll carrier is, on a common carrier basis.
500

501 **IX. THE COMMISSION HAS ALREADY APPROVED AT LEAST ONE**
502 **ARRANGEMENT SIMILAR TO THE ONE FOR WHICH SPRINT IS**
503 **SEEKING INTERCONNECTION WITH SENTCO.**
504
505 **Q. Has the Commission approved any arrangements in which two entities**
506 **combine to provide local voice services in a manner similar to that proposed**
507 **by Sprint and TWC here?**
508 **A.** Yes. The Commission has approved the arrangement in which Sprint and TWC
509 currently serve approximately 4,000 customers in the Lincoln, NE metropolitan
510 area under a model that is indistinguishable from the proposed model for
511 SENTCO territory. Although the relevant interconnection agreement covering
512 Lincoln was voluntarily negotiated by Alltel and Sprint, and not the subject of an
513 interconnection arbitration, the agreement was approved by this Commission in
514 Docket No. C-3300 by Order dated December 14, 2004. In its Order, the
515 Commission stated in the third paragraph that "the implementation of the
516 agreement is consistent with the public interest, convenience, and necessity." In
517 fact, Sprint and TWC today are providing the identical services in Lincoln under
518 its interconnection agreement with Alltel. If SENTCO's position prevails, it
519 might encourage carriers such as Alltel to assert arguments about the continued

520 viability of their voluntarily negotiated agreements. If carriers such as Alltel do
521 so, even customers in major metropolitan areas such as Lincoln could likewise be
522 deprived of competitive facilities-based services. As I understand it, such a result
523 would be contrary to the intent of the Act and serve only to preserve the
524 monopolies enjoyed by ILECs and RLECs. Competitive market entry has seen
525 countless legal challenges since the passage of the Act in 1996 because it was
526 impossible for Congress to foresee every single issue that could arise or every
527 novel approach to competition that the human mind might devise. The
528 Sprint/TWC model appears to be just such an approach. It is one that fits fully
529 within the flexible framework set forth in the Act, yet was not specifically
530 identified such as "UNEs."
531
532 **Q. Are the network structure and elements you described above for the**
533 **proposed services the same as what is being used to serve customers in**
534 **Lincoln, NE?**
535 **A.** Yes. The network is essentially the same. Exhibit JRB-2 is a comparison
536 between what Sprint is proposing for SENTCO territory in Exhibit JRB-1 and
537 what is actually deployed in Lincoln. The differences are a result of the different
538 geographic details and the fact that the ILEC in Lincoln is Alltel.
539
540 **Q. Is the network configuration and interconnection you are seeking with**
541 **SENTCO comparable to a typical ILEC to ILEC interconnection?**

542 A. Yes. The network configuration and interconnection I've described are
543 comparable to a typical ILEC to ILEC interconnection. Generally, ILECs provide
544 their own loops from their switch to their customers and interconnect to other
545 ILECs via an interconnection trunk comparable to the type Sprint is seeking from
546 SENTCO.
547
548 **Q. Does SENTCO currently have any wireless or ILEC interconnections you've**
549 **described above?**
550 A. Although I don't have first hand knowledge that there is a wireless
551 interconnection, SENTCO does have an interconnection agreement with Western
552 Wireless, a wireless provider. I would assume the purpose of this interconnection
553 agreement is to enable SENTCO and Western Wireless to exchange local traffic
554 over interconnection trunks provisioned pursuant to the terms and conditions of
555 the contract.
556
557 **X. SPRINT OFFERS ITS SERVICES INDISCRIMINATELY.**
558 **Q. When did Sprint begin discussions with cable companies such as TWC?**
559 **A.** Although I do not work in the department that developed the strategy of creating
560 relationships with cable companies and other similarly situated companies, I
561 provide regulatory support for this effort. I first got involved in this work in early
562 2003.
563

564 **Q. How did Sprint approach this new business opportunity you have previously**
565 **described as jointly provided service?**
566 A. Sprint identified cable companies as natural partners for a jointly provided
567 competitive voice service offering. Sprint identified potential "business partners"
568 through various means including trade associations such as the National Cable
569 Television Cooperative ("NCTC"), a buying consortium that represents over
570 1,000 independent cable operators, including many smaller operators; attendance
571 at trade shows; etc. Sprint attended one trade show in 2003, four trade shows in
572 2004, and three trade shows so far in 2005. The purpose of attending these trade
573 shows and meeting with the NCTC was to convey to as many cable companies as
574 possible that Sprint was interested in forming relationships to provide competitive
575 voice services.
576
577 **Q. Are cable companies divided into categories and has Sprint offered its**
578 **services to each of them?**
579 A. Yes, the cable industry is divided into categories labeled Tier 1, Tier 2 and Tier
580 3.[2] Tier 1 consists of the top 10 companies, Tier 2 consists of numbers 11-44 and
581 Tier 3 are number 45 and above. Sprint has approached virtually all cable
582 companies through the various means I mentioned above. Sprint has held
583 discussions with all of the Tier 1 companies, a majority of the Tier 2 companies
584 and several of the Tier 3 companies.
585

[2] Ranking of cable companies is from the 2004 Kagan Broadband Cable Financial Databook.

586 **Q. Briefly describe Sprint's results working with cable companies.**

587 A. Sprint has seen considerable success to date in working with cable companies.
588 Sprint has publicly announced agreements with seven cable companies covering
589 more than 18 states serving over 30 million households. Sprint's agreements
590 cover cable companies of all sizes bringing customers a choice of voice services
591 in large and small, urban and rural communities across the United States.

592

593 **Q; Is the proposed service intended to be a private service offered only to certain**
594 **types of customers?**

595 A. No. As is the case with the Sprint/TWC offering in Lincoln under the
596 interconnection agreement between Sprint and Alltel, the service will be available
597 to all customers in the SENTCO serving territory who wish to purchase them.

598

599 **Q. Will Sprint provide its interconnection services to all parties within a class**
600 **similarly situated to TWC, on a non-discriminatory basis?**

601 A. Yes. Sprint intends to offer its interconnection services, including those services
602 previously listed, to all entities that are similarly situated to TWC. That means,
603 Sprint intends to provide the interconnection services to all entities who desire to
604 take them and who have comparable "last mile" facilities to the cable companies.

605

606 **Q. Does the policy to provide the interconnection services to all within a class**
607 **substantially similar to TWC mean that the network configuration will be**
608 **identical for each provider? If not, why not?**

609 A. Sprint will provide the same services to all within the class similar to TWC to
610 allow those services effectively to be offered to the public. But, the networks of
611 the other providers will not be identical, nor will the amount of services
612 purchased. Some carriers for example will require different switching capabilities
613 from other carriers, but all will be offered the opportunity indiscriminately to
614 purchase use of Sprint's Class 5 end office switch. Because the Sprint/last-mile
615 provider relationship is a business relationship, some aspects of the final
616 agreement will, of necessity, reflect business differences and will be negotiated
617 separately. The presence of such differences, however, does not mean that Sprint
618 will discriminate between members in the class; just as a carrier offering a tariff
619 services is not discriminating when it is permitted to price the product differently
620 depending upon the minimum commitment level purchased. As in the tariff
621 example, as long as the tariffing carrier offers the same conditions to entities
622 within each class to which it is offered, no discrimination occurs. To be clear,
623 Sprint will offer the services previously identified to all within the class of entities
624 who desire the services and who have comparable "last mile" facilities to the
625 cable companies. In fact, should the Commission require Sprint to file a tariff for
626 this offering, it will make the offering available in a tariff.
627

628 **XI. SPRINT HAS ATTEMPTED TO NEGOTIATE WITH SENTCO AN**
629 **INTERCONNECTION AGREEMENT THAT IS SIMILARLY SITUATED**
630 **TO SENTCO'S EXISTING APPROVED AGREEMENT WITH WESTERN**
631 **WIRELESS.**
632

633

634 **Q. What approach has Sprint taken in its negotiations with SENTCO?**

635 A. Sprint has made a business decision to utilize, with some modifications, a
636 template based on the interconnection agreement SENTCO has negotiated with
637 Western Wireless. Many times new entrants evaluate whether existing
638 interconnection contracts meet their needs rather than negotiating an entirely new
639 agreement.

640

641 **Q. Does the Western Wireless agreement meet all of Sprint's needs with respect**
642 **to the type of interconnection Sprint is seeking with SENTCO?**

643 A. The Western Wireless agreement meets Sprint's goal of getting into the market as
644 quickly as possible. However, the agreement is not consistent with all of the
645 positions Sprint generally takes when negotiating with ILECs. Certain
646 modifications have been made to accommodate the fact that Sprint is a wireline
647 company rather than a wireless company, since the local calling scopes for
648 purposes of reciprocal compensation are different between a wireless company
649 and a wireline company. In addition, the following modifications were made to
650 the agreement (other than the open issues that are the subject of the Arbitration
651 proceeding): (i) the term of the agreement was changed; (ii) the terms of record
652 retention were clarified and revised to ensure both parties' ability to comply; (iii)
653 indirect interconnection language was removed because Sprint agreed that it
654 would interconnect directly with SENTCO; and (iv) language was added to
655 ensure both parties' compliance with CALEA, requirements for providing SS7
656 information, and requirements for 911. Even though Sprint may not agree with

657 all the terms and conditions of the contract and under different circumstances may
658 have arbitrated additional issues, Sprint felt the simplest approach would be to
659 make minimal modifications to the Western Wireless agreement.
660
661 **Q. Why did Sprint decide not to arbitrate some of the terms and conditions of**
662 **the Western Wireless agreement if they were not consistent with positions**
663 **Sprint generally takes with ILECs ?**
664 **A.** It is Sprint's goal to interconnect with SENTCO in order to bring a service to
665 these rural Nebraska customers that they've never seen before: a wireline
666 facilities-based voice service alternative to the service of their current monopoly
667 ILEC, SENTCO. Sprint felt the least controversial approach would be to attempt
668 to use, to the extent possible, an existing SENTCO interconnection agreement.
669 This would allow the Commission to focus on the threshold issue being disputed,
670 Sprint's right to interconnect with SENTCO.
671
672 **Q. How would you characterize the negotiations between Sprint and SENTCO?**
673 **A.** The negotiations between Sprint and SENTCO have been tentative because of the
674 conflict over the issues in this proceeding related to Sprint's intent to interconnect
675 for purposes of the business model described in my testimony. Negotiations,
676 other than this point, have been comparable to other ILEC/CLEC negotiations,
677 given Sprint's willingness to accept the majority of terms and conditions of an
678 agreement already in use.
679

680 **XII. SPRINT'S POSITION ON ARBITRATION ISSUES 1 AND 2.**

681 **Arbitration Issue No. 1 – Should the definition of "End User or End User**
682 **Customer" include customers of a service provider for whom Sprint provides**
683 **interconnection and other telecommunications services? (Section 1.6 and as**
684 **applied elsewhere in the Agreement)**

685

686 **Q. Please describe Arbitration Issue No. 1.**

687 **A.** Arbitration Issue No. 1 addresses the core issue in the disagreement between
688 Sprint and SENTCO, which is whether the term "End User" in the
689 interconnection contract should allow Sprint to include the local traffic of
690 customers of third party service providers.

691

692 **Q. What is Sprint's position on Arbitration Issue No. 1?**

693 A. It is Sprint's position that the definition of "End User and End User Customer" in
694 Section 1.6 should include customers of a service provider for whom Sprint
695 provides interconnection and other telecommunications services, including TWC.

696

697 **Arbitration Issue No. 2 – Should the definition of "Reciprocal**
698 **Compensation" include the transportation and termination on each carrier's**
699 **network of all local traffic? Section 1.21 and as applied elsewhere in the**
700 **Agreement.**

701

702

703 **Q. Please describe Arbitration Issue No. 2.**

704 A. Arbitration Issue No. 2 is a result of SENTCO's position on Arbitration Issue No.
705 1. Since SENTCO does not agree that Sprint is a telecommunications carrier, it
706 will not agree on the definition of Reciprocal Compensation. SENTCO merely
707 extends its position on Arbitration Issue No. 1 to another aspect of the contract
708 terms and conditions.

709

710 **Q. Please describe Sprint's position on Arbitration Issue No. 2.**

711 A. It is Sprint's position on Arbitration Issue No. 2 that the definition of Reciprocal
712 Compensation should include the transportation and termination on each carrier's
713 network of all Local Traffic as that term is defined in Section 1.3 of the
714 Agreement.

715

716 **Q. Does this conclude your testimony?**

717 A. Yes it does.

Current Network Configuration Serving Subscribers in Lincoln, NE

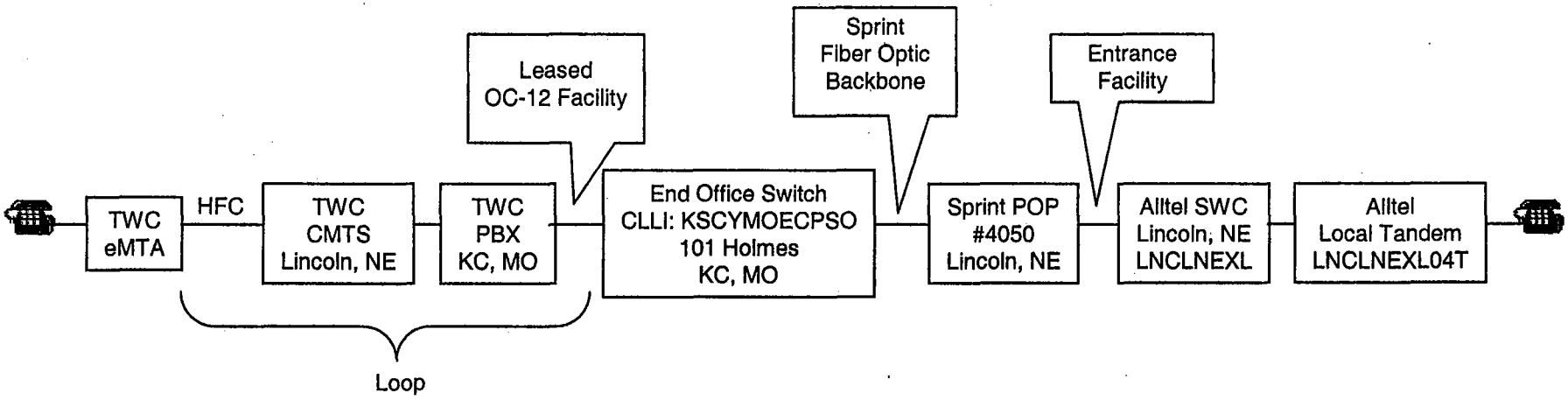

Legend:
eMTA = embedded multi-media terminal adapter
HFC = hybrid fiber coax
CMTS = cable modem termination system
PBX = private branch exchange
CLLI = common language location identifier
POP = point of presence
SWC = serving wire center

Network Configuration Envisioned to Serve Subscribers in Falls City, NE Compared to Existing Network in Lincoln, NE

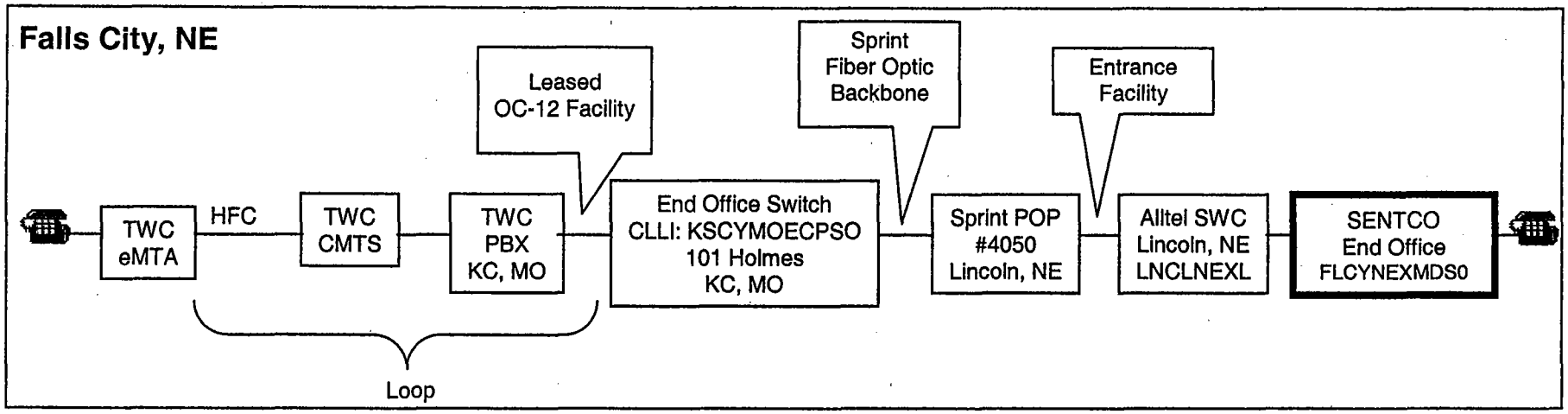

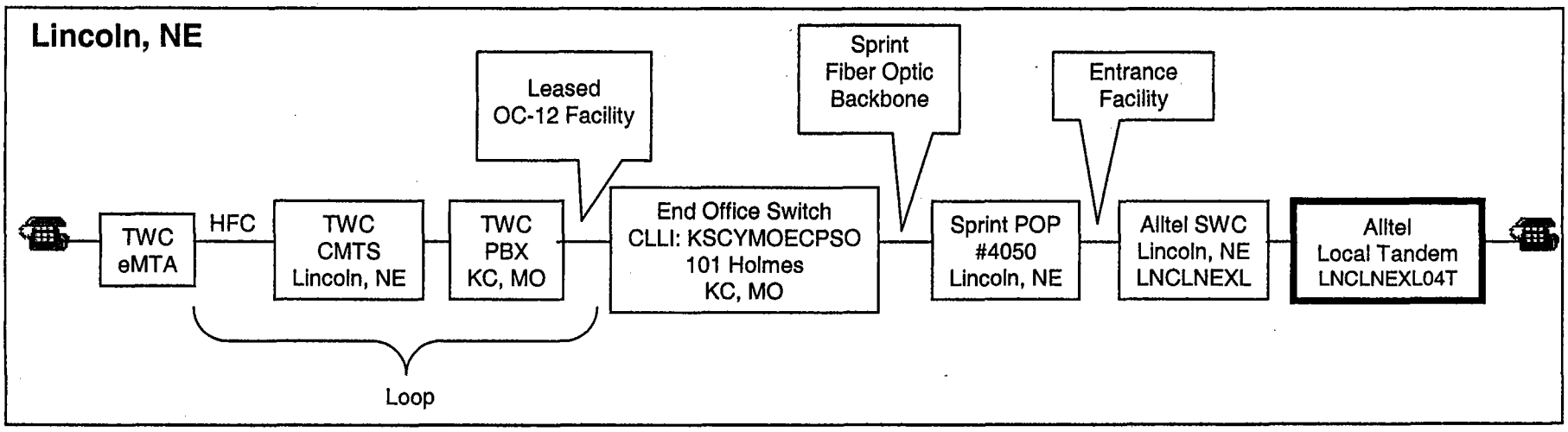

Exhibit JRB-3

To: Any Concerned,
Amber Mez and myself are satisfied Time Warner Cable customers. We currently have cable and high speed internet service from Time Warner. We are very interested in becoming customers of Time Warner's digital phone service as well. We feel it would benefit the Falls City residents for several reasons. First and foremost, competitors in a closed market area create benefits for all the area customers. Better and more services, competitive pricing, more responsive customer support, and break through technology are some of the benefits. For us, there is the added convenience of a simplified billing and bill paying process. We hope digital service will also bring other technologies and greater coverage in the area for other services, including cable, high speed internet, and wireless phone services.
We have found Time Warner to be a customer friendly and dependable company, and service provider. We look forward to the possibility of trying Time Warner digital phone service, and seeing what other services Time Warner may be able to bring to the Falls City area.

Sincerely, Jeffrey Woosley.

CERTIFICATE OF SERVICE

The undersigned hereby certifies that the foregoing was served by electronic mail and U.S. mail, postage prepaid to the following on the 25th day of July, 2005:

Shana Knutson
Nebraska Public Service Commission
1200 N St. 300 The Atrium
Lincoln, NE 68508

Paul M. Schudel
Woods & Aiken LLP
301 S 13th St Ste 500
Lincoln NE 68508

James A. Overcash
Woods & Aitken LLP
301 S 13th St Ste 500
Lincoln, NE 68508

Diane C. Browning

BEFORE THE NEBRASKA PUBLIC SERVICE COMMISSION

IN RE:	APPLICATION NO: C-3429
SPRINT COMMUNICATIONS COMPANY L.P.'S PETITION FOR ARBITRATION UNDER THE TELECOMMUNICATIONS ACT.	

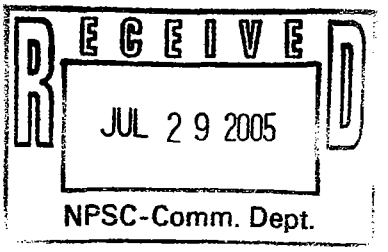

SPRINT COMMUNICATIONS COMPANY L.P.'S MOTION IN LIMINE AND REQUEST TO EXCLUDE DISCOVERY AND DOCUMENTS IDENTIFIED BY SOUTHEAST NEBRASKA TELEPHONE COMPANY

Pursuant to Rules 16.01, 16.11and 17.02 of the Rules of Commission Procedure and Rules 26 and 37 of the Nebraska Discovery Rules for All Civil Cases (the "Nebraska Discovery Rules"), Sprint hereby objects to certain discovery responses filed by Southeast Nebraska Telephone Company ("SENTCO") in this matter, and moves for an order, *in limine*, excluding the exhibits, testimony, discovery responses, and other documents identified herein.

Sprint requests an order excluding the items identified by SENTCO in its Response to Sprint's Request for Production No. 1 and listed as Exhibit Nos. 3, 5, 6, 7, 8, 9, 10, 11, 12, 13, 14, 15, 16, and 17 of SENTCO's Exhibit Designations dated July 25, 2005 in this proceeding, consisting of the applications, the applicants' respective discovery responses, the entire hearing transcript, all testimony, and post-hearing briefs comprising virtually the entire administrative record in each of the following two proceedings:

(1) *In Re: Request of Time Warner Cable Information Services (Nebraska), LLC d/b/a Time Warner Cable, for Statewide CLEC Authority*, Docket No. C-3228, (June 17, 2004) (the "Time Warner CLEC Certification Proceeding"); and

(2) *In Re: Sprint Communications Company L.P.'s Request for Statewide CLEC Authority*, Docket No. C-3204 (Amended Application July 16, 2004) (the "Sprint CLEC Certification Proceeding").

I. FACTUAL BACKGROUND PERTINENT TO MOTION IN LIMINE

Following a period of negotiation, on or about May 20, 2005, Sprint filed its Petition for Arbitration Under the Telecommunications Act ("Sprint's Petition), to have the Commission resolve issues on which the parties were unable to agree. Sprint sought the Commission's participation to confirm that Sprint is a "telecommunications carrier" under the Act with respect to the proposed services and thus that Sprint is entitled to interconnection with SENTCO pursuant to Section 251(a) of the Act, and is entitled to certain requirements set forth in Section 251(b) of the Act. The Commission entered a procedural order in this case, pursuant to which the parties propounded and responded to written discovery requests. The parties filed direct testimony on July 25, 2005 and a hearing has been set for August 10, 2005.

In its Response to Sprint's Request for Production No. 1, SENTCO stated as follows:

"The documents identified by SENTCO as of this date are:

1. The following documents relating to Application No. C-3204, Sprint's request for statewide CLEC authority filed with the Nebraska Public Service Commission: Amended Application dated July 16, 2004; Sprint's Responses to Intervenors' Data Requests dated September 21, 2004; Sprint's Confidential Responses to Intervenors' Data Requests, dated September 21, 2004, including but not limited to Wholesale Voice Services Agreement between Time Warner Cable Inc. and Sprint Communications Company L.P. dated December 5, 2003; any supplements to such Responses; Pre-filed Testimony of James R. Burt dated October 1, 2004; Pre-filed Testimony of Dr. Brian K. Staihr dated October 1, 2004; Transcript of hearing held on November 4, 2004; and Post-Hearing Comments of Sprint dated January 3, 2003.

2. The following documents relating to Application No C-3228, the request of Time Warner Cable Information Services (Nebraska), LLC d/b/a Time Warner Cable ("Time Warner") for statewide CLEC authority filed with the Nebraska Public Service Commission: Application and Request for Authority dated June 17, 2004, with attachments; Responses and Objections to Data Requests of Commission Staff and Interveners [sic] dated September 1, 2004, including, but not limited to Wholesale Voice Services Agreement between Time Warner Cable Inc. and Sprint Communications Company L.P. dated

December 5, 2003; Pre-Filed Testimony of Julie Y. Patterson dated September 1, 2004; Pre-Filed Testimony of Steven E. Watkins filed with the Commission on September 16, 2004; Transcript of hearing held on September 17, 2004; and Time Warner's Post-Hearing Brief dated October 7, 2004."

(A true and correct copy of SENTCO's Response to Sprint's Data Requests is attached hereto as Exhibit A and incorporated herein). SENTCO did not identify which portions of the documents it intends to rely on.

In addition, SENTCO identified all of the above-referenced documents in Exhibit Nos. 3, 5, 6, 7, 8, 9, 10, 11, 12, 13, 14, 15, 16, and 17 in its Exhibit Designations. (A true and correct copy of SENTCO's Exhibit Designations dated July 25, 2005 is attached hereto as Exhibit B and incorporated herein.) SENTCO has therefore sought to import virtually the entire administrative records from two other Commission proceedings into the present case.

The Commission entered protective orders in the Sprint CLEC Certification Proceeding and the Time Warner CLEC Certification Proceedings (collectively, the "Protective Orders"). (A true and correct copy of each Protective Order is attached hereto as Exhibit C and D, respectively, and incorporated herein).

II. ARGUMENT

A. Sprint Was Not A Party To The Time Warner CLEC Certification Proceeding.

Sprint was not a party, and did not participate in, the Time Warner CLEC Certification Proceeding. Sprint therefore has had no access to the documents upon which SENTCO now apparently seeks to rely, no opportunity to examine or cross-examine either Time Warner or SENTCO witnesses in connection with that proceeding, and no opportunity to object to the introduction into evidence of any of the exhibits in that proceeding. SENTCO should not be permitted to introduce into evidence the entire administrative record from a proceeding in which Sprint did not have an opportunity to review the documents relied upon by SENTCO or to cross-examine third party witnesses who are not expected to be called in this case. Furthermore, because Sprint was not a party to the Time Warner CLEC Certification Proceeding, Sprint does not currently possess any of the documents from that proceeding. SENTCO did not timely

produce, in response to Sprint's discovery requests, either the documents or the portions thereof on which it intends to rely. The deadline (July 25, 2005) for supplementation of discovery responses as set forth in the Commission's Discovery Order dated July 8, 2005 has now passed. Accordingly, SENTCO should not be permitted to introduce the entire administrative record from the Time Warner CLEC Certification Proceeding.

B. The CLEC Certification Proceedings Presented Only State Law Issues And Are Irrelevant To This Proceeding.

By seeking to import the entire administrative record from the two closed CLEC Certification Proceedings (*i.e.* all pleadings, all discovery and the entire hearing transcript), SENTCO is attempting to re-litigate issues either lost or the resolution of which it remains dissatisfied. SENTCO's use of the CLEC Certification Proceeding documents is irrelevant to this case because unlike here, which is an action solely under the federal Act, the CLEC Certification Proceedings presented only state law issues that are distinguishable from this case. The time for moving to reconsider those findings or to appeal from the Commission's decisions has long since passed. SENTCO cannot seek to re-litigate resolved issues through the guise of discovery. The only evidence relevant to the instant proceeding is the proposed interconnection agreement and the evidence produced and admitted during this proceeding. Some of SENTCO's discovery requests prove that it understood that it was required to propound whatever discovery it wanted from Sprint in this case. For example, although SENTCO apparently had at least one copy of the Sprint-Time Warner agreement from other proceedings, it nevertheless propounded a request for that agreement here. Sprint complied and provided a redacted copy subject to the protective order in this case. SENTCO clearly could have propounded whatever discovery it determined it needed in this case from Sprint (or from third parties). Having failed to do so, however, SENTCO cannot do an "end around" its failure to seek discovery by importing wholesale the proceedings in two distinct dockets which presented distinguishable state law issues only.

C. Permitting SENTCO To Import The Entire Administrative Record From Distinct Proceedings Would Needlessly Waste Resources And Jeopardize The Procedural Order In This Proceeding.

The Commission has established an aggressive procedural schedule to complete compulsory arbitration of unresolved disputes under the federal Act in this proceeding. SENTCO's wholesale identification of documents from two distinct state law proceedings is hardly circumscribed. In SENTCO's response to Sprint's discovery here, it identified not only the petitions in each CLEC Certification Proceeding, but apparently substantially all of the applicants' respective discovery responses in each proceeding (to staff and intervenors), as well as the entire hearing transcript, all testimony, and post-hearing briefing. SENTCO did not identify the portions of these document on which SENTCO intends to rely. The Commission and Sprint would be forced to sift through numerous documents in order to guess at which portions of the record SENTCO intends to rely upon. The Commission would be forced to alter the procedural schedule in this case in order to permit such review and to provide opportunity for further objections, which would jeopardize compliance with the statutory timeframes in which the Commission must act in approving or rejecting the proposed interconnection agreement.

D. SENTCO Has Violated The Terms Of Two Protective Orders.

By attempting to admit the entire administrative records of both the Sprint and Time Warner CLEC Certification Proceedings, SENTCO has already violated the express terms of the Protective Orders in those proceedings by failing to carve out confidential information. In fact, SENTCO's Response to Sprint's Request for Production No. 1 and its Exhibit Designations blatantly reference Sprint's "Confidential" discovery responses. Because Sprint was not a party to the Time Warner CLEC Certification Proceeding, Sprint has no direct knowledge of what parts of the administrative record constitute confidential information in that proceeding. However, the fact that a Protective Order was entered indicates that some or all of the administrative record contains confidential information. Accordingly, SENTCO has violated both Protective Orders by attempting to admit the entire administrative records of both proceedings without carving out confidential information.

The Protective Orders expressly limited the use of all confidential information obtained therein solely to those proceedings. The Protective Orders provided as follows with respect to defined "Confidential Information":

> Confidential information shall be accessible to the Commission, Commission counsel, and Commission staff members and **shall not be used or disclosed except for the purpose of conducting, issuing orders in, and otherwise participating in, this proceeding.**
>
> (Exh. C, p.2, ¶3). (Emphasis added).

> All persons who may be entitled to receive, or who are afforded access to, any Confidential Information by reason of this Order shall neither use nor disclose the Confidential Information for purposes of business or competition, **or any purpose other than the purposes of preparation for and conducting these proceedings, and then solely as contemplated herein**, and shall take those precautions that are necessary to kept he Confidential Information secure and in accordance with the purposes and intent of this Order.
>
> (Exh. D, p.3, ¶8). (Emphasis added).

SENTCO has not appeared in either of the CLEC Certification Proceedings to request modification or lifting of the Protective Orders, and apparently has failed to notify Time Warner Cable of its intent to rely upon confidential matters protected from such use by the Protective Order in the Time Warner CLEC Proceeding. To Sprint's knowledge, Time Warner has not stipulated to release documents from that case for use in future proceedings, and likewise, Sprint has not received notice that the Commission has modified or lifted the protective orders in either of the CLEC Certification Proceedings.

III. CONCLUSION

Although civil contempt penalties may lie under Nebraska law against SENTCO for the identification and reliance upon confidential documents in violation of existing protective orders, Sprint merely seeks an order from this Commission granting Sprint's Motion in Limine and excluding all of the exhibits and other information identified in SENTCO's Response to Sprint's Request for Production No. 1 and listed as Exhibit Nos. 3, 5, 6, 7, 8, 9, 10, 11, 12, 13, 14, 15, 16, and 17 of SENTCO's Exhibit Designations dated July 25, 2005 in this proceeding.

DATED this the 28th day of July, 2005.

SPRINT COMMUNICATIONS COMPANY L.P.

By: Diane Browning

Diane C. Browning

Attorney – Law and External Affairs
6450 Sprint Parkway
KSOPHN0212-2A511
Overland Park, KS 66251
913-315-9284
913-523-0571 (fax)

And

REED SMITH LLP
Darren S. Weingard
Raymond A. Cardozo
Two Embarcadero Center, Suite 2000
San Francisco, CA 94111
(415) 543-8700
(415) 391-8269

CERTIFICATE OF SERVICE

The undersigned hereby certifies that the foregoing was served by electronic mail and U.S. mail, postage prepaid to the following on the 28th day of July, 2005:

Shana Knutson
Nebraska Public Service Commission
1200 N St. 300 The Atrium
Lincoln, NE 68508

Paul M. Schudel
Woods & Aiken LLP
301 S 13th St Ste 500
Lincoln NE 68508

James A. Overcash
Woods & Aitken LLP
301 S 13th St Ste 500
Lincoln, NE 68508

Diane Browning

Diane C. Browning

EXHIBIT A

REQUESTS FOR PRODUCTION OF DOCUMENTS

REQUEST FOR PRODUCTION NO. 1

Please produce all documents that relate to your contention that Sprint's agreement with Time Warner Cable is individually negotiated and not indiscriminately available to all class of entities as to be effectively available to the public.

RESPONSE TO REQUEST: All General Objections and all objections to definitions and instructions are incorporated into the objection regarding this Request for Documents. Without waiving and subject to the foregoing objections and request, SENTCO provides the following response to this Request for Documents:

The documents identified by SENTCO as of this date are:

1. The following documents relating to Application No. C-3204, Sprint's request for statewide CLEC authority filed with the Nebraska Public Service Commission: Amended Application dated July 16, 2004; Sprint's Responses to Intervenors' Data Requests dated September 21, 2004; Sprint's Confidential Responses to Intervenors' Data Requests, dated September 21, 2004, including but not limited to Wholesale Voice Services Agreement between Time Warner Cable Inc. and Sprint Communications Company, L.P. dated December 5, 2003; any supplements to such Responses; Pre-filed Testimony of James R. Burt dated October 1, 2004; Pre-filed Testimony of Dr. Brian K. Staihr dated October 1, 2004; Transcript of hearing held on November 4, 2004; and Post-Hearing Comments of Sprint dated January 3, 2005.

2. The following documents relating to Application No. C-3228, the request of Time Warner Cable Information Services (Nebraska), LLC d/b/a Time Warner Cable ("Time Warner") for statewide CLEC authority filed with the Nebraska Public Service Commission: Application and Request for Authority dated June 17, 2004, with attachments; Responses and Objections to Data Requests of Commission Staff and Interveners dated September 1, 2004, including but not limited to Wholesale Voice Services Agreement between Time Warner Cable Inc. and Sprint Communications Company, L.P. dated December 5, 2003; Pre-Filed Testimony of Julie Y. Patterson dated September 1, 2004; Pre-Filed Testimony of Steven E. Watkins filed with the Commission on September 16, 2004; Transcript of hearing held on September 17, 2004; and Time Warner's Post-Hearing Brief dated October 7, 2004.

3. Petition for Arbitration filed in this proceeding.

4. Any and all Tariffs and all amendments filed by Sprint Communications Company L.P. with the Nebraska Public Service Commission.

5. Any and all Tariffs and all amendments filed by Time Warner with the Nebraska Public Service Commission.

The foregoing documents are either already in Sprint's possession or are matters of public record that are equally or more readily available to Sprint than obtaining the documents from SENTCO. On information and belief, SENTCO also anticipates that Sprint's responses to discovery in this proceeding will also constitute a document responsive to this request for production

REQUEST FOR PRODUCTION NO. 2

Please produce all documents that relate to your contention that the interconnection obligation in Section 251(a) of the Act applies only to an entity with a retail relationship with an end-user customer.

RESPONSE TO REQUEST: All General Objections and all objections to definitions and instructions are incorporated into the objection regarding this Request for Documents. Additionally, to the extent that this Request for Documents seeks identification of legal authorities, legal theories or any other non-fact information, SENTCO objects to this Request for Documents as improper discovery. Without waiving and subject to the foregoing objections and request, SENTCO provides the following response to this Request for Documents:

Please refer to SENTCO's response to Request for Production No. 1. At the present time, SENTCO possesses no further documents responsive to this Request that would not be characterized as legal authority.

REQUEST FOR PRODUCTION NO. 3

Please produce all documents that relate to your contention that "Sprint does not propose to offer any telecommunications service to the public."

RESPONSETO REQUEST: All General Objections and all objections to definitions and instructions are incorporated into the objection regarding this Request for Documents.

Additionally, to the extent that this Request for Documents seeks identification of legal authorities, legal theories or any other non-fact information, SENTCO objects to this Request for Documents as improper discovery. Without waiving and subject to the foregoing objections and request, SENTCO provides the following response to this Request for Documents:

Please refer to SENTCO's response to Request for Production No. 1.

REQUEST FOR PRODUCTION NO. 4

Please produce all documents that relate to your contention that "Sprint is not holding itself out as a common carrier in the SENTCO Falls City exchange."

RESPONSETO REQUEST: All General Objections and all objections to definitions and instructions are incorporated into the objection regarding this Request for Documents. Additionally, to the extent that this Request for Documents seeks identification of legal authorities, legal theories or any other non-fact information, SENTCO objects to this Request for Documents as improper discovery. Without waiving and subject to the foregoing objections and request, SENTCO provides the following response to this Request for Documents:

Please refer to SENTCO's response to Request for Production No. 1.

REQUEST FOR PRODUCTION NO. 5

Please produce all documents that relate to your contention that "Sprint is not holding itself out as a common carrier in the SENTCO Falls City exchange."

RESPONSETO REQUEST: All general objections and all objections to definitions and instructions are incorporated into the objection regarding this Request for Documents. In addition to these objections, SENTCO objects to this request on the basis that it is improper because the request is duplicative of Document Request No. 4.

DATED: July 14, 2005.

VERIFICATION

STATE OF NEBRASKA)
) ss:
COUNTY OF RICHARDSON)

I, Elizabeth A. Sickel, declare and say that I am the Vice-President and General Manager of Southeast Nebraska Telephone Company ("Company"), and that I make this verification on its behalf, being authorized to do so. I have read the foregoing Objections and Responses to Data Requests and Requests for Production of Documents prepared with the advice and assistance of counsel and of employees and representatives of the Company, and under penalty of perjury, I state, subject to inadvertent or undiscovered errors and reserving the right to make changes in the foregoing Objections and Responses if it appears at any time that errors or omissions have been made therein, that the matters therein, that are specific to the Company are true and correct to the best of my knowledge, information and belief.

Elizabeth A. Sickel
Vice President and General Manager

Subscribed and sworn to before me, a Notary Public, this 13th day of July, 2005.

Barbara J. Brunette
NOTARY PUBLIC

GENERAL NOTARY - State of Nebraska
BARBARA J. BRUNETTE
My Comm. Exp. June 27, 2007

0161

SOUTHEAST NEBRASKA TELEPHONE COMPANY

By: _____

Paul M. Schudel, No. 13723
James A. Overcash, No. 18627
WOODS & AITKEN LLP
301 South 13th St, Ste 500
Lincoln, NE 68508
(402) 437-8500

and

Thomas J. Moorman, D.C. Bar No. 384790
KRASKIN, MOORMAN & COSSON, LLC
2120 L Street, N.W., Suite 520
Washington, D.C. 20037
(202) 296-8890
Its Attorneys

CERTIFICATE OF SERVICE

I hereby certify that true and correct copies of the foregoing **SOUTHEAST NEBRASKA TELEPHONE COMPANY'S OBJECTIONS AND RESPONSES TO DATA REQUESTS AND REQUESTS FOR PRODUCTION OF DOCUMENTS FROM SPRINT COMMUNICATIONS COMPANY, L.P.** were sent by First-Class U.S. Mail and electronic mail on July 14, 2005, to the following:

Diane C. Browning
6450 Sprint Parkway,
Mailstop KSOPHN0212-2A511
Overland Park, KS 66251

Shana Knutson
Nebraska Public Service Commission
300 The Atrium
1200 N Street
Lincoln, NE 68508

_____
Paul M. Schudel

EXHIBIT B

BEFORE THE NEBRASKA PUBLIC SERVICE COMMISSION

IN RE:	)	
SPRINT COMMUNICATIONS	)	
COMPANY L.P. PETITION FOR	)	**APPLICATION NO. C-3429**
ARBITRATION UNDER THE	)	
TELECOMMUNICATIONS ACT	)	

SOUTHEAST NEBRASKA TELEPHONE COMPANY'S EXHIBIT DESIGNATIONS

Southeast Nebraska Telephone Company ("SENTCO") hereby identifies and designates the following exhibits in accordance with the Planning Conference Order entered herein by the Hearing Officer on June 28, 2005:

#	Description	Offered	Accepted
1	Petition for Arbitration, Application No. C-3429, May 23, 2005, filed by Sprint Communications Company L.P. ("Sprint")		
2	Motion to Dismiss or, in the Alternative, Response of Southeast Nebraska Telephone Company to Petition for Arbitration, Application No. C-3429, filed June 17, 2005 by Southeast Nebraska Telephone Company ("SENTCO")		
3	Direct Testimony of Elizabeth A. Sickel, Application C-3204, filed July 25, 2005, with attachment		
4	Correspondence from Paul Schudel to Monica Barone dated January 12, 2005		
5	Sprint's Amended Application for Statewide CLEC Authority, Application No. C-3204, filed with the Nebraska Public Service Commission and dated July 16, 2004		
6	Sprint's Responses to Intervenors' Data Requests, Application No. C-3204, dated September 21, 2004.		
7	Sprint's Confidential Responses to Intervenors' Data Requests, Application No. C-3204, dated September 21, 2004, including Supplements and including Wholesale Voice Services Agreement between Time Warner Cable Inc. and Sprint Communications Company, L.P. dated December 5, 2003		
8	Pre-filed Testimony of James R. Burt, Application No. C-3204, dated October 1, 2004		
9	Pre-filed Testimony of Dr. Brian K. Staihr, Application No. C-3204, dated October 1, 2004		
10	Transcript of hearing held on November 4, 2004, Application No. C-3204		
11	Post-Hearing Comments of Sprint, Application No. C-3204, dated January 3, 2005		
12	Application and Request of Time Warner Cable Information		

#	Description	Offered	Accepted
12	Application and Request of Time Warner Cable Information Services (Nebraska), LLC d/b/a Time Warner Cable ("Time Warner") for Statewide CLEC Authority, Application No. C-3228, filed with the Nebraska Public Service Commission, dated June 17, 2004, with attachments		
13	Time Warner's Responses and Objections to Data Requests of Commission Staff and Interveners, Application No. C-3228, dated September 1, 2004		
14	Pre-Filed Testimony of Julie Y. Patterson, Application No. C-3228, dated September 1, 2004		
15	Pre-Filed Testimony of Steven E. Watkins, Application No. C-3228, filed September 16, 2004		
16	Transcript of Hearing, Application No. C-3228, September 17, 2004		
17	Time Warner's Post-Hearing Brief, Application No. C-3228, dated October 7, 2004		
18	Sprint Communications Company, L.P. Tariffs filed with the Nebraska Public Service Commission		
19	Time Warner Cable Information Services, LLC d/b/a Time Warner Cable, Nebraska Tariffs filed with the Nebraska Public Service Commission		
20	Sprint Communications Company, L.P. Responses to Southeast Nebraska Telephone Company's First Set of Interrogatories, Requests to Produce Documents and Requests for Admissions dated July 14, 2005, with attachments		

DATED: July 25, 2005.

SOUTHEAST NEBRASKA TELEPHONE COMPANY

By: _____

Paul M. Schudel, No. 13723
James A. Overcash, No. 18627
WOODS & AITKEN LLP
301 South 13th St, Ste 500
Lincoln, NE 68508
(402) 437-8500

and

Thomas J. Moorman, D.C. Bar No. 384790
KRASKIN, MOORMAN & COSSON, LLC
2120 L Street, N.W., Suite 520
Washington, D.C. 20037
(202) 296-8890
Its Attorneys

CERTIFICATE OF SERVICE

I hereby certify that true and correct copies of the foregoing **SOUTHEAST NEBRASKA TELEPHONE COMPANY'S** were sent by First-Class U.S. Mail and electronic mail on July 25, 2005, to the following:

Diane C. Browning
6450 Sprint Parkway,
Mailstop KSOPHN0212-2A511
Overland Park, KS 66251

Shana Knutson
Nebraska Public Service Commission
300 The Atrium
1200 N Street
Lincoln, NE 68508

_____
Paul M. Schudel

EXHIBIT C

BEFORE THE NEBRASKA PUBLIC SERVICE COMMISSION

In the Matter of Application of Sprint Communications Company L.P. for an Amendment to its Certificate of Public Convenience and Necessity to Provide Local Exchange Telecommunications Service in all Exchanges within the State of Nebraska in which Sprint is not Currently Certified to Provide Local Exchange Service	)	Application No. C-3204

PROTECTIVE ORDER

BY THE COMMISSION:

This matter came before the Hearing Officer in this application during the hearing on discovery held September 13, 2004. The Nebraska Public Service Commission (Commission) upon consideration, and being otherwise fully advised, finds that a protective order should be entered. The following protective order is hereby entered with respect to all confidential information contained in the above-captioned application or filed by any of the parties in any proceedings in this application or produced in discovery.

1. Confidential Information: All documents and information (including confidential information in computer storage media or devices of every type or description) filed with the Commission or furnished to other parties as part of testimony or briefs or pursuant to any requests for information, subpoenas, or other modes of discovery (formal or informal), and including depositions, that are claimed to be of a trade secret, proprietary, or confidential nature (hereinafter referred to as confidential information) shall be so marked by the party so claiming, by stamping [*2] the same with a designation indicating its trade secret, proprietary or confidential nature. Access to and review of confidential information shall be strictly controlled by the terms of this order.

2. Nondisclosure Agreement: No access to confidential information shall be authorized under the terms of this order to any person until the person desiring access to such information signs a nondisclosure agreement in the form that is attached hereto and incorporated herein as "Exhibit A." The nondisclosure agreement (Exhibit A) shall require the person to whom disclosure is to be made to certify in writing that he or she has read this order and agrees to be bound by its terms and conditions. The agreement shall contain the signatory's full name, permanent address and employer, and the name of the party with whom the signatory is associated. Such agreement shall be filed with the Commission and served on all parties to this proceeding.

3. Availability to the Commission and Parties: Confidential information shall be accessible to the Commission, Commission counsel, and Commission staff members and shall not be used or disclosed except for the purpose of conducting, issuing orders in, and otherwise participating in, this proceeding.

Confidential information shall be disclosed to a party's counsel, witnesses, or experts only as follows:

a. Except as set forth in paragraph 3(F), confidential information may not be disclosed to any individual who has marketing, pricing, product development, market analysis, market entry, or strategic planning responsibilities for any party to this proceeding or for any competitor of Sprint or who will have those responsibilities in the foreseeable future.

b. Prior to receipt of confidential information, the individual seeking disclosure shall provide to the disclosing party an executed nondisclosure agreement including 1) his or her name, employer, title, job description and experience and area of expertise; 2) a statement that he or she does not have responsibility for marketing, pricing, product development, market analysis, market entry, or strategic planning for any party to the proceeding or competitor of Sprint, nor does he or she anticipate having those responsibilities in the foreseeable future.

c. If the disclosing party believes in good faith that disclosure should not be made to any person seeking confidential information pursuant to paragraph 4, the disclosing party may respond to the notice by filing a written objection. If the parties cannot resolve the dispute informally, the matter shall be submitted to the Commission by motion. No confidential information need be disclosed pending resolution by the Commission.

d. If any party believes that, due to the highly sensitive nature of any information to be disclosed in this proceeding, the provisions of this protective order do not provide sufficient protection, the disclosing party may apply to the Commission for extraordinary protection.

e. While in the custody of the Commission, the original and all copies of material containing information claimed under this order to be confidential shall be kept in a sealed envelope or box, which envelope or box is marked "CONFIDENTIAL--SUBJECT TO PROTECTIVE ORDER IN APPLICATION NO. C-3204."

f. Any counsel of record or employee of a party participating in this proceeding who has marketing, pricing, product development, market analysis, market entry, or strategic planning responsibilities for any party to this proceeding or for any competitor of Sprint shall be entitled to review confidential information subject to signing the nondisclosure agreement and will be strictly limited to use of such

information solely in this proceeding, or for preparation of and conduct of any appeals or subsequent FCC filing arising directly from this proceeding.

g. Segregation of Files: The materials containing the confidential information and proceedings and orders of the Commission with regard thereto will be sealed and marked as provided in this order of the Commission, segregated in the files of the Commission and withheld from inspection by any person except under the conditions established in this order, unless such confidential information is released from the restrictions of this order either through agreement of the parties or, after notice to the parties and hearing, pursuant to the order of the Commission and/or final order of a court having jurisdiction.

h. Preservation of Confidentiality: No persons who are afforded access to any confidential information by reason of this order shall use or disclose the confidential information for purposes of business or competition, or any other purpose other than the purpose of preparation of and conduct of this proceeding, or for preparation of and conduct of any appeals or subsequent FCC filing arising directly from this proceeding. Persons afforded access to confidential information shall use such information solely as contemplated herein, and shall take all reasonable precautions to keep the confidential information secure as trade secret, confidential or proprietary information and in accordance with the purposes and intent of this order. No person may copy, microfilm, microfiche or otherwise reproduce the information without the written consent of the party claiming protection except for his or her own use, or the use of persons permitted access to the information and who have signed a nondisclosure agreement.

i. Use of Confidential Material: In the event any party intends to use or uses information obtained pursuant to the nondisclosure agreement under this protective order in testimony, exhibits, discovery or discovery responses, cross-examination, briefs or any other pleading or document to be filed in this proceeding, the following shall apply:

j. Testimony, briefs or other pleadings containing the information claimed to be confidential shall be filed under seal with the Commission by the party preparing and using the same in sealed envelopes or other appropriate containers, which shall be prominently marked with the legend "CONFIDENTIAL--SUBJECT TO PROTECTIVE ORDER IN APPLICATION NO. C-3204." A copy thereof shall be served on the parties who have signed nondisclosure agreements. The complete document containing the protected material shall not be filed in the public record.

k. The pages of the documents referred to in paragraph 6(A) above which contains information claimed to be confidential shall be clearly marked.

l. Any party who has not executed a nondisclosure agreement shall receive a copy of the documents referred to in paragraph 6(A) above from which information claimed to be protected has been omitted.

m. Testimony, exhibits and discovery responses containing the information claimed to be confidential shall be filed under seal with the Commission by the party preparing and using the same in sealed envelopes or other appropriate containers, which shall be prominently marked with the legend, "CONFIDENTIAL--SUBJECT TO PROTECTIVE ORDER IN APPLICATION NO. C-3204." A copy thereof shall be served on the parties who have signed nondisclosure agreements. The complete document containing the protected material shall not be filed in the public record. Any party who has not executed a nondisclosure agreement shall receive a copy from which information claimed to be protected has been omitted.

n. In the course of this proceeding, any hearings during which documents or information obtained pursuant to the terms of this order are likely to be disclosed shall be conducted in camera, attended only by persons authorized to have access to such information under this order, provided that there has been no prior Commission determination that the documents or information in question are not confidential. The transcript of such in camera proceedings shall be kept under seal.

4. Access to Record:

a. General: Access to sealed testimony, records and information shall be limited to the Commission and persons who have signed the nondisclosure agreement set for in Exhibit A, unless such information is released from the restrictions of this order either through agreement of the parties or after notice to the parties and hearing, pursuant to the order of the Commission or the final order of the final order of a court having final jurisdiction.

b. Appeal: Sealed portions of the record in this proceeding may be forwarded to any court of competent jurisdiction for purposes of an appeal, but under seal as designated herein for the information and use of the court. If a portion of the record is forwarded to a court under seal for the purposes of an appeal, the providing party shall be notified which portion of the sealed record has been designated by the appealing party as necessary to the record on appeal.

5. Continuation of Protection: Unless otherwise ordered, confidential information, including transcripts of any depositions to which a claim of confidentiality is made, shall remain under seal and shall continue to be subject to the protective requirements of this order after final settlement or conclusion of this matter, including administrative or judicial relief thereof.

6. Challenge to Confidentiality: This protective order establishes a procedure for the expeditious handling of information that a party claims is confidential; it shall not be construed as

an agreement or ruling on the confidentiality of any document. In the event that any party challenges a claim for protection under this protective order, the party objecting to the removal of the confidential designation bears the burden of demonstrating the harm that would result from public disclosure of the material for which protection is sought. Any party may challenge the characterization of any document or specific information claimed by the providing party to be confidential in the following manner:

a. A party challenging the confidentiality of any materials pursuant to this order shall first contact counsel for the providing party and attempt to resolve any differences informally;

b. If the parties cannot resolve the disagreement informally, the party challenging the claim for protection shall do so by filing a motion with the Commission, which identifies with specificity, the material challenged and requests a ruling whether a document or information is confidential.

c. Within three business days of service of a motion for determination of confidentiality, the party claiming confidentiality shall deliver under seal all of the relevant documents and information to the Commission for an in camera inspection by the Commission or its designated hearing officer.

d. A ruling on the confidentiality of the challenged document or specific information shall be made by the Commission after an in camera hearing which shall be conducted under circumstances such that only those persons duly authorized hereunder to have access to such confidential materials shall be present. Such hearing shall be held as expeditiously as is practicable following delivery of the relevant documents and information to the Commission.

e. The record of said in camera hearing shall be marked "CONFIDENTIAL -- SUBJECT TO PROTECTIVE ORDER IN APPLICATION NO. C-3204." Court reporter notes of such hearing shall be separately bound, segregated, sealed and withheld from inspection by any person who has not executed a nondisclosure agreement in accordance with this order.

f. If the Commission rules that any document or specific information should be removed from the restrictions imposed by this order, no party shall disclose such document or specific information, or use it in the public record for five business days unless authorized by the providing party to do so. The provisions of this subparagraph are entered to enable the party claiming protection to seek a stay or other relief from the Commission's order denying that party such protection.

7. Return of Documents: Confidential information provided pursuant to this protective order shall be returned to the disclosing party within 30 days of the conclusion of the proceeding or any appeal taken therefrom.

a. Responses to Subpoena or Order: If any person receiving confidential

information receives a subpoena or order for production of confidential information produced under the terms of this order, that person shall promptly notify the effected party's counsel after receiving the subpoena or order and before the documents are produced, identifying the date and location of the ordered or requested production.

b. Damages: Any person who violates this protective order by reason of unauthorized use, or disclosure or failure to keep the information confidential may be liable for damages and penalties as provided by law.

IT IS THEREFORE ORDERED by the Nebraska Public Service Commission that the terms and conditions of the protective order for Docket No. C-3204 be, and hereby are, as set forth herein.

MADE AND ENTERED at Lincoln, Nebraska, this 21st day of September 2004.

By: _____
Frank E. Landis
Hearing Officer

EXHIBIT A

BEFORE THE NEBRASKA PUBLIC SERVICE COMMISSION

In the Matter of Application of Sprint Communications Company L.P. for an Amendment to its Certificate of Public Convenience and Necessity to Provide Local Exchange Telecommunications Service in all Exchanges within the State of Nebraska in which Sprint is not Currently Certified to Provide Local Exchange Service	)	Application No. C-3204

NONDISCLOSURE AGREEMENT

I hereby certify that I am familiar with the terms and conditions of the Protective Order entered by the Commission in the above-captioned docket and agree to be bound by the terms and conditions thereof.

I further agree that the information requested shall be used only for the valid purposes of these proceedings as provided in said Order.

DATED this _____ day of _____, 2004.

Signature: _____

Name (type or print) _____

Address and Telephone: _____

_____

_____

Representing: _____

Position: _____

EXHIBIT D

BEFORE THE NEBRASKA PUBLIC SERVICE COMMISSION

In the Matter of the Application of Time Warner Cable Information Services (Nebraska) LLC d/b/a Time Warner Cable for a certificate of authority to provide local and interexchange voice services within the state of Nebraska.	)	Application No. C-3228 MOTION FOR PROTECTIVE ORDER GRANTED Entered: September 8, 2004

BY THE COMMISSION:

OPINION AND FINDINGS

By Motion for Protective Order filed September 7, 2004, Southeast Nebraska Telephone Company (Intervenor) requests that the Commission enter the Protective Order attached to its Motion and identified as Exhibit A. The Commission believes that a Protective Order is necessary in order to adequately protect the parties' interests in the event that confidential information is exchanged at any point during this proceeding.[1] Accordingly, in consideration of the Motion for Protective Order, the Commission finds that a Protective Order should be issued. The Protective Order attached to the Motion for Protective Order as Exhibit A should be adopted. Parties seeking access to confidential and proprietary information must abide by said Protective Order and must execute the nondisclosure agreement attached thereto.

ORDER

IT IS THEREFORE ORDERED by the Nebraska Public Service Commission that the Protective Order attached hereto as Exhibit A be and it is hereby adopted.

MADE AND ENTERED at Lincoln, Nebraska, this 8th day of September 2004.

NEBRASKA PUBLIC SERVICE COMMISSION

COMMISSIONERS CONCURRING:

Anne C. Boyle

Rod Johnson

//s// Gerald L. Vap

Chairman Gerald L. Vap

ATTEST:

Frank J. Pollock

Executive Director

[1] The Commission considers this Motion for Protective Order separate and apart from the Motion to Compel. The Hearing Officer has not yet made a ruling on the pending discovery issues.

Printed with soy ink on recycled paper

BEFORE THE NEBRASKA PUBLIC SERVICE COMMISSION

IN THE MATTER OF THE APPLICATION OF TIME WARNER CABLE INFORMATION SERVICES (NEBRASKA), LLC d/b/a TIME WARNER CABLE FOR A CERTIFICATE OF AUTHORITY TO PROVIDE LOCAL AND INTEREXCHANGE VOICE SERVICES WITHIN THE STATE OF NEBRASKA.	)	APPLICATION NO. C-3228

PROTECTIVE ORDER

This Matter came before the Nebraska Public Service Commission ("Commission") upon Southeast Nebraska Telephone Company's (herein referred to as "Intervener") Motion for Protective Order in this application and proposed form of Protective Order. The Commission having considered the Motion, the responses of the parties, and being otherwise fully advised, finds that the Motion should be granted and the Protective Order entered. The following Protective Order is hereby entered with respect to all confidential information (as defined herein) filed by any of the parties in this proceeding or produced in discovery during this proceeding:

1. Confidential Information. All documents, data, information, studies and other matters filed with the Commission or served on a party that are claimed by a party to be trade secret, privileged or confidential in nature shall be furnished pursuant to the terms of this Order, and shall be treated by all persons accorded access thereto pursuant to this Order as constituting trade secret, confidential or privileged commercial and financial information (hereinafter referred to as "Confidential Information"), and shall neither be used nor disclosed except for the purposes of these proceedings, and solely in accordance with this Order.

2. Exchange of Confidential Information. All Confidential Information made available pursuant to this Order shall be given to counsel for the parties, and shall not be used or

disclosed except for purposes of these proceedings; provided, however, that access to any specific Confidential Information may be authorized by said counsel, solely for the purpose of these proceedings, to consultants or employees of any party to this proceeding, if said person has signed an agreement to be bound by the terms and conditions of this Protective Order.

3. Notice of Order. Any person to be given access to the Confidential Information contemplated herein shall receive a copy of this Protective Order and execute in writing an agreement in the form attached hereto as Exhibit A to comply with and be bound by all of the terms of this Order; and counsel shall furnish copies of said agreement to comply and be bound by the terms of this Order to Shana Knutson, Counsel for the Nebraska Public Service Commission.

4. Marking Confidential Information. Where feasible, Confidential Information will be marked as such prior to delivery to counsel for the party requesting such Confidential Information by copying information on to yellow colored paper.

5. Segregation of Information. The materials containing the Confidential Information shall be segregated from any and all other files of the party receiving such Confidential Information and shall be withheld from inspection by any person except under the conditions established pursuant to this Order, unless such Confidential Information is released from the restrictions of this Order either through agreement of the parties or by order of the Commission.

6. Disputes. In the event that the parties hereto are unable to agree that certain documents, data, information, studies or other matters constitute trade secret, confidential or privileged commercial and financial information, the party objecting to the trade secret claim shall forthwith submit the said matters to the Hearing Officer for their review pursuant to this

Order and in accordance with applicable Rules and legal precedents of the Commission. When the Hearing Officer rules on the question of whether any documents, data, information, studies or other matters submitted to them for review and determination are Confidential Information, the Hearing Officer will enter an order resolving the issue. In the event that either party is dissatisfied with the Hearing Officer's ruling, such party may request the Commission's review of the Hearing Officer's order.

7. Commission Procedure For Information. All written information filed by the parties in these proceedings that has been designated as Confidential Information, if filed with the Commission, will be sealed by the Commission, segregated in the files of the Commission, and withheld from inspection by any person not bound by the terms of this Order, unless such Confidential Information is released from the restrictions of this Order, either through agreement of the parties or, after notice to the parties and hearing, pursuant to an order of the Commission and/or final order of a court having jurisdiction.

8. Restrictions on Use. All persons who may be entitled to receive, or who are afforded access to, any Confidential Information by reason of this Order shall neither use nor disclose the Confidential Information for purposes of business or competition, or any purpose other than the purposes of preparation for and conducting these proceedings, and then solely as contemplated herein, and shall take those precautions that are necessary to keep the Confidential Information secure and in accordance with the purposes and intent of this Order.

9. Appeal Rights. This Order shall in no way constitute any waiver of the rights of any party herein to contest any assertion or finding of trade secret, confidentiality or privilege, and to appeal any such determination of the Hearing Officer or such assertion by a party.

10. Protection of Information During Appeal. In the event of an appeal of the determination of these proceedings, portions of the proceeding record containing Confidential Information may be sealed upon motion of a party hereto and forwarded to any court of competent jurisdiction for purposes of an appeal, but under seal as designated herein for the information and use of the court. If a portion of the record is forwarded to a court under seal for the purposes of an appeal, the providing party shall be notified which portion of the sealed record has been designated by the appealing party as necessary to the record on appeal. Unless otherwise ordered, Confidential Information shall remain under seal and shall continue to be subject to the protective requirements of this Protective Order after final settlement or conclusion of this matter, including administrative or judicial relief thereof.

11. Procedure at Completion of Application. Upon completion of these proceedings, including any administrative or judicial review thereof, all Confidential Information, whether the original or any duplication or copy thereof, furnished under the terms of this Protective Order, shall be returned to the party furnishing such Confidential Information. Confidential Information made part of the record in these proceedings shall remain in the possession of the Commission.

12. Responses to Subpoena or Order. If any person receiving Confidential Information receives a subpoena or order for production of Confidential Information produced under the terms of this Protective Order, that person shall notify the counsel of record for each party in this proceeding within 24 hours after receiving the subpoena or order and before the documents are produced, identifying the date and location of the ordered or requested production.

DATED this ____ day of September, 2004.

NEBRASKA PUBLIC SERVICE COMMISSION

_____
CHAIRMAN

ATTEST:

_____
Executive Director

COMMISSIONER'S CONCURRING:

EXHIBIT A

BEFORE THE NEBRASKA PUBLIC SERVICE COMMISSION

IN THE MATTER OF THE APPLICATION OF TIME WARNER CABLE INFORMATION SERVICES (NEBRASKA), LLC d/b/a TIME WARNER CABLE FOR A CERTIFICATE OF AUTHORITY TO PROVIDE LOCAL AND INTEREXCHANGE VOICE SERVICES WITHIN THE STATE OF NEBRASKA.	)	**APPLICATION NO. C-3228**

NONDISCLOSURE AGREEMENT

I hereby certify that I am familiar with the terms and conditions of the Protective Order entered by the Commission in the above-captioned docket and agree to be bound by the terms and conditions thereof.

_____, 2004

_____
Name (print or type)

_____
Title

_____
Representing

_____
Business Address

_____
Signature

RECEIVED
AUG - 3 2005
NEBRASKA PUBLIC SERVICE COMMISSION

BEFORE THE NEBRASKA PUBLIC SERVICE COMMISSION

IN RE:	)	
	)	
SPRINT COMMUNICATIONS COMPANY L.P. PETITION FOR ARBITRATION UNDER THE TELECOMMUNICATIONS ACT	)	**APPLICATION NO. C-3429**

PRE-FILED REBUTTAL TESTIMONY OF STEVEN E. WATKINS

Q: Please state your name, business address and telephone number for the record.

A: My name is Steven E. Watkins. My business address is 2120 L Street, N.W., Suite 520, Washington, D.C., 20037. My business phone number is (202) 296-9054.

Q: What is your current position?

A: I am Special Telecommunications Management Consultant to the Washington, D.C. law firm of Kraskin, Moorman & Cosson, LLC.

Q: What are your duties and responsibilities in your Telecommunications Management Consultant position with Kraskin, Moorman & Cosson, LLC?

A: I provide telecommunications management consulting services and regulatory assistance to smaller local exchange carriers ("LECs") and other smaller firms providing telecommunications and related services in more rural areas of the United States. My work involves assisting client LECs and related entities in their analysis of regulatory requirements and industry matters requiring specialty expertise; negotiating, arranging and administering connecting carrier arrangements; and assisting clients in compliance with the rules and regulations arising from the passage of the Telecommunications Act of 1996 (the "Act"). Prior to working with Kraskin, Moorman & Cosson, I was the senior

1 policy analyst for the National Telephone Cooperative Association ("NTCA"), a trade
2 association whose membership consists of approximately 500 small and rural telephone
3 companies. While with NTCA, I was responsible for evaluating the then proposed Act,
4 the implementation of the Act by the Federal Communications Commission ("FCC") and
5 was largely involved in the NTCA's efforts with respect to the advocacy of provisions
6 addressing the issues specifically related to rural companies and their customers.

7 **Q: Have you prepared and attached further information regarding your background**
8 **and experience?**

9 A: Yes, this information is included in Attachment A following my testimony.

10 **Q: On whose behalf are you submitting this Rebuttal Testimony?**

11 A: I am submitting this Rebuttal Testimony to the Nebraska Public Service Commission
12 ("Commission") on behalf of Southeast Nebraska Telephone Company, Inc.
13 ("SENTCO").

14 **Q: What is the purpose of your Rebuttal Testimony?**

15 A: The purpose of my Rebuttal Testimony is to respond to the testimony of James R. Burt
16 submitted in this docket on behalf of Sprint Communications L.P. ("Sprint") on July 25,
17 2005. I will address three points in response to Sprint witness Burt and my review of his
18 testimony in this proceeding.

19 1. First, Mr. Burt attempts to shield Time Warner Cable Information Services,
20 LLC d/b/a Time Warner Cable ("Time Warner Cable") from scrutiny in its role as the
21 actual Local Exchange Carrier ("LEC") providing telephone exchange service to end user
22 customers in competition with SENTCO. In doing so, Mr. Burt and Sprint are
23 attempting, presumably together with Time Warner Cable, to ignore the directives of this

1 Commission as set forth in the Order granting Application No. C-3228 dated November
2 23, 2004 (the "C-3228 Order").
3 2. Second, the Sprint witness has distorted the FCC's interconnection rule
4 definitions and the proper application of such rules in an attempt to establish that Sprint is
5 the LEC that proposes to provide telephone exchange service to end users located in
6 SENTCO's exchanges, when in fact it is Time Warner Cable that is the LEC that
7 proposes to provide such service. The FCC's local interconnection requirement rules
8 reflect the requirements of Section 251(b)(5) of the Act. Those requirements apply to the
9 LEC that directly terminates calls to the end user's premises. In this case, it is Time
10 Warner Cable that occupies that role, not Sprint. The record already before the
11 Commission demonstrates this fact. Time Warner Cable's and Sprint's own admitted
12 facts are contrary to Mr. Burt's attempts to rationalize some other explanation
13 inconsistent with the facts and the rules.
14 3. Finally, and as explained in the SENTCO Direct Testimony of Ms. Sickel, it
15 would be Time Warner Cable that would be the Local Exchange Carrier providing
16 telephone exchange service to end users in competition with SENTCO, and it must be
17 Time Warner Cable that enters into an interconnection agreement with SENTCO that sets
18 forth the terms and conditions between the two LEC competitors consistent with the
19 requirements of Section 251(b) of the Act. Sprint is nothing more than a provider of
20 contract services to Time Warner Cable – self-described by Sprint as an "enabler" or
21 provider of wholesale services. As a contract services provider, Sprint is assisting Time
22 Warner Cable in its role as the LEC that proposes to engage in the provision of telephone
23 exchange service to end user customers in SENTCO's service area.

1 **Q: Based on your observations, what weight do you believe the Commission should**
2 **accord to Mr. Burt's testimony?**
3 **A:** To the degree that Mr. Burt mischaracterizes, alters, or omits discussion of the facts
4 bearing upon the issues in this arbitration that have already been established on the record
5 before the Commission in the certification proceedings for Sprint and Time Warner Cable
6 or fails to reflect properly the application of Section 251(b)(5) and the FCC rules to this
7 proceeding, the credibility of his testimony must be questioned. Therefore, the
8 Commission should not accord evidentiary weight to Mr. Burt's testimony to the extent
9 that it seeks to support Sprint's efforts to circumvent SENTCO's rights under the Act to
10 enter into an interconnection agreement with the Local Exchange Carrier that seeks to
11 provide competitive telephone exchange service within SENTCO's service area.

12 **I. SPRINT SHOULD NOT BE ALLOWED TO SHIELD TIME WARNER CABLE**
13 **FROM THE REQUIREMENTS THAT THE COMMISSION HAS ALREADY**
14 **ESTABLISHED FOR TIME WARNER CABLE AS THE POTENTIAL**
15 **COMPETITOR TO SENTCO.**
16
17 **Q: You mention the proceeding in Application No. C-3228 regarding the application of**
18 **Time Warner Cable for a certificate of authority in Nebraska. Did you participate**
19 **in that proceeding?**
20 **A:** Yes. I provided prepared testimony and I appeared at the hearing to testify. In that
21 connection, I reviewed all materials filed in the docket and was present during the
22 entirety of the hearing.
23 **Q: How is your testimony in the Time Warner Cable certification proceeding relevant**
24 **to this proceeding?**

1 **A:** Time Warner Cable's certification request for the provision of local exchange service in
2 SENTCO's service area was premised on Time Warner Cable's use of certain facilities
3 and services to be provided by Sprint. (*See,* Application No. C-3228 Hearing Transcript
4 at 14:12-15 and 49:2-20, Attachment B hereto.) My testimony in the Time Warner
5 Cable proceeding sets forth concerns that the application of Time Warner Cable was
6 "unique because the result of [Time Warner Cable's] proposal would be that it would not
7 enter into interconnection agreements with [incumbent local exchange carriers.]" (C-
8 3228 Order at p. 4, Attachment C hereto.) My testimony concluded that while it was
9 Time Warner Cable's intent "to serve the end-user with local exchange service, it does
10 not intend to have interconnection arrangements directly with the other carriers in
11 Nebraska that terminate a call from a Time Warner Cable end user or that originate a call
12 to that end user." (*Id.*) Instead, as was apparent in the Time Warner Cable certification
13 proceeding and as is even clearer here, it is the intent for Sprint, and not Time Warner
14 Cable, to have an interconnection agreement with SENTCO, even though it is Time
15 Warner Cable that is the LEC that proposes to provide telephone exchange service in
16 competition with SENTCO.
17 Pursuant to the most fundamental application of Sections 251 and 252 of the Act,
18 SENTCO has the right to negotiate and enter into an agreement with the LEC that will be
19 providing telephone exchange service in competition with SENTCO. Such a contractual
20 agreement is necessary to establish the rights and responsibilities between two carriers
21 that are competing with each other. Sprint's attempt to distort its roles versus that of
22 Time Warner Cable as the competing LEC would deny SENTCO these rights. If Time
23 Warner Cable expects to compete with SENTCO in the provision of LEC services, then

1 Time Warner Cable is the carrier that has interconnection obligations to SENTCO under
2 Section 251(b) of the Act. These obligations apply to all LECs that compete with each
3 other. SENTCO is not obligated to provide interconnection to Time Warner Cable in the
4 absence of negotiation and the execution of a written agreement with Time Warner
5 Cable.

6 **Q: How did the Commission address your concerns?**

7 **A:** The Commission agreed that my concerns presented on behalf of SENTCO were valid
8 and should be addressed with specific requirements: "The Commission has lingering
9 concerns, however, with the impact of [Time Warner Cable's] request for authority in
10 [SENTCO's] territory . . . and with respect to Mr. [Watkins's] testimony that this
11 Applicant unlike other carriers, does not plan to enter into an interconnection agreement
12 with the incumbent local exchange carrier (ILEC)." (*Id.* at p. 5)

13 The Commission went on to conclude that Time Warner Cable "as the retail
14 provider who seeks to compete in a rural incumbent's area and who benefits from this
15 competition should be likewise accountable to the Commission during this process."
16 (*Id.*) The Commission, among other requirements imposed on Time Warner Cable as
17 prerequisites to moving forward to offer service in competition with SENTCO or any
18 other rural telephone company, concluded specifically that Time Warner Cable "must
19 either: 1. Through negotiation or arbitration, reach an interconnection/resale agreement
20 with the pertinent local exchange carrier and receive Commission approval of the
21 interconnection/resale agreement; or 2. In the event a certificated local carrier provides a
22 wholesale tariff, purchase rates from that tariff, and filed its own tariff." (*Id.* at p. 6.)

1 **Q: Does Mr. Burt's testimony recognize or address the foregoing Commission**
2 **requirements placed upon Time Warner Cable?**
3 **A:** No. While Mr. Burt clearly recognizes that Sprint will be performing on a contract basis
4 some of the functions that Time Warner Cable will require in order to provide its
5 proposed LEC services, Mr. Burt nevertheless ignores the Commission's requirements
6 and does not explain how or whether these requirements will be fulfilled by Time Warner
7 Cable. At page 9 of Mr. Burt's testimony, he explicitly states that Time Warner Cable
8 does not have interconnection agreements with incumbent LECs. Instead, Mr. Burt
9 vaguely attempts to characterize Sprint as the Local Exchange Carrier in the arrangement
10 between Sprint and Time Warner Cable (*see,* Burt Testimony at pp. 13-14). However,
11 Mr. Burt acknowledges, as he must, that it is Time Warner Cable, and not Sprint, that
12 will have the retail customer relationship with the end users. (*See,* Burt Testimony, page
13 9, lines 202-203; page 14, lines 319-322). Accordingly, it is clear that Sprint intends to
14 assist Time Warner Cable in an effort to frustrate and circumvent the Commission's
15 directives in the C-3228 Order.
16 **Q: Under the intended approach, is Sprint the Local Exchange Carrier providing**
17 **service to end users in SENTCO's service area?**
18 **A:** No. Even though Mr. Burt attempts throughout his testimony to suggest that somehow
19 Sprint is the LEC regarding Time Warner Cable's proposed offering of
20 telecommunications services in SENTCO's service area, that assertion makes no sense. I
21 will address later in this Rebuttal Testimony other definitional aspects of Mr. Burt's
22 testimony that demonstrate that Sprint's role does not fit the definitions of a LEC
23 interconnecting with another LEC pursuant to Section 251(b)(5) of the Act. For now,

however, it is proper to note that Time Warner Cable, in its certification proceeding and in its own tariff, has clearly established that it is Time Warner Cable that is providing local exchange service to end users. The following portions of the record in Application No. C-3228 demonstrate that Time Warner Cable would be the Local Exchange Carrier in connection with a competitive telephone exchange service offered to end users in SENTCO's service area:

1. "Description of Services" set forth in Exhibit E to Time Warner Cable's Application filed in Application No. C-3228.
2. Time Warner Cable's Responses and Objections to Data Requests No. 2 and 5 of the Data Requests of the Commission Staff and Interveners in Application No. C-3228.
3. Pages 5 and 6 of the Direct Testimony of Julie Y. Patterson, dated September 1, 2004, admitted as Exhibit 3 at the hearing of Application No. C-3228.
4. Application No. C-3228 Hearing Transcript, page 11, lines 5-23, Time Warner Cable's witness describes the services that *Time Warner Cable* intends to provide *to end users;* page 15, lines 2-10, Time Warner Cable's witness admits that it is the LEC responsible for compensation to other Local Exchange Carriers as prescribed in Section 251(b)(5) of the Act; page 16, lines 8-25, Time Warner Cable's witness admits that it is solely responsible to Time Warner Cable's customers for "customer service, and the provision of service to end users;" page 36, lines 11-17, Time Warner Cable's witness states that the retail customer would be "Time Warner Cable's customer exclusively;" and page 53, lines 1-6, Time Warner Cable's witness states that Sprint has no relationship with any end

1 user customer of Time Warner Cable. (All of the foregoing referenced portions of
2 the Transcript are included in Attachment B hereto.)
3 5. Time Warner Cable's Tariff, by way of example, specifies in Section 2.1.2A that
4 local and interexchange service as defined in such tariff is offered by Time
5 Warner Cable and such service "is furnished for the use of End Users in placing
6 and receiving calls within Nebraska." "End User" is defined in Section 1.2 of
7 such Tariff.
8 Yet, Mr. Burt now advances a new explanation, inconsistent with the sworn
9 testimony in Application No. C-3228, that claims that Sprint also is a retail service
10 provider to Time Warner Cable's end user customers.
11 **Q: Can Mr. Burt's Testimony be squared with the record in the Time Warner Cable**
12 **certification proceeding?**
13 **A:** No. While Mr. Burt appears to recognize the same relationship between Sprint and Time
14 Warner Cable as discussed by Time Warner Cable during its certification proceeding, his
15 analysis now adopts a revisionist approach to that relationship. We all understand that
16 Sprint may be a provider to Time Warner Cable of certain support facilities and functions
17 pursuant to the "Wholesale Voice Services Agreement" entered into between Sprint and
18 Time Warner Cable that will allow Time Warner Cable to provide service to end users.
19 Both Time Warner Cable and Sprint have established this fact in their respective
20 certification proceedings. For example, in Sprint's Response to Interveners' Data
21 Request No. 5 in Application No. C-3204, dated September 21, 2004, Sprint states:
22 "Time Warner Cable and USA Companies are wholesale customers of Sprint in the state
23 of Nebraska. Attached as Confidential Exhibit A to this response is the redacted version

1 of the wholesale agreement between Sprint and Time Warner that provides evidence of
2 the relationship." However, in Mr. Burt's Testimony at page 3, lines 68-70, page 6, lines
3 140-142, page 7, lines 156-159, pages 8-9, lines 184-199, and page 11, lines 250-256.
4 Mr. Burt now offers a new and revised description of that relationship, suggesting that
5 Sprint is the LEC providing service to Time Warner Cable's customers.
6 **Q: Are there any other indications that it is Time Warner Cable that will be the retail**
7 **Local Exchange Carrier service provider to end users?**
8 **A:** Yes. In its tariff on file with the Commission, at Section 0.3, Time Warner Cable states
9 that it may provide its services utilizing facilities of carriers other than Time Warner
10 Cable, but "[s]ervice provided by [Time Warner Cable] is not part of a joint undertaking
11 with any other carrier providing telecommunications channels, facilities, or services."
12 Mr. Burt now attempts to advance the contrary position that both Sprint and Time Warner
13 Cable would be providing local exchange service to Time Warner Cable's end users.
14 Moreover, in its response to Request for Admission No. 1, Sprint admits that Time
15 Warner Cable is the entity that has the relationship with the end user customer.
16 **Q: Do you agree with Mr. Burt at page 8, lines 180-181, that the business model he**
17 **describes "allow[s] for market entry far sooner than if either Time Warner Cable or**
18 **Sprint were to attempt to enter the market alone"?**
19 **A:** No. It is part of the obfuscation that Mr. Burt engages in within his testimony. If Time
20 Warner Cable needs network, network services or other functions it does not have, it can
21 contract privately (like it has done) to arrange for those services. The same is true for
22 Sprint (as Mr. Burt notes later in his testimony at page 14 that Sprint has already done).
23 Those private arrangements are distinct from the requirements of the Act and the

obligations of the competing LEC to seek terms and conditions directly with the incumbent LEC (or in this case SENTCO). Mr. Burt's statements should not be used to blur the issues that the Commission must address in this proceeding nor the fact that Time Warner Cable is the LEC competitor of SENTCO, not Sprint.

II. SPRINT SHOULD NOT BE PERMITTED TO DISTORT THE SECTION 251(b)(5) RULES GOVERNING THE EXCHANGE OF LOCAL TRAFFIC BETWEEN TWO COMPETING LOCAL EXCHANGE CARRIERS

Q: On pages 19-22, Witness Burt claims that Sprint is the party that is entitled to a so-called "reciprocal compensation" arrangement for the exchange of local traffic. What section of the FCC's rules address the terms that define such arrangements?

A: The interconnection requirements discussed by Mr. Burt arise under Section 251(b)(5) of the Act. Subpart H of the FCC's Part 51 Rules are the rules that define the terms that apply to traffic exchanged between Local Exchange Carrier competitors. (*See* 47 C.F.R. Part 51, Subpart H, Sections 51.701 through 51.717.) Subpart H describes the requirements for the transport and termination of telecommunications traffic. With regard to telecommunications traffic between wireline carriers, the Subpart H requirements are confined to the exchange of local traffic (defined as traffic that is not interstate or intrastate exchange access or information access). (47 C.F.R. Section 51.701(b)(1).)

Q: How do the terms of the FCC's Subpart H rules apply with respect to transport and termination?

A: For purposes of Subpart H, a reciprocal compensation arrangement is between <u>two carriers</u>. (47 C.F.R. Section 51.701(e).) It is an arrangement between <u>two carriers</u> in which each carrier receives compensation for the "Transport" and "Termination" on its

1 network for telecommunications traffic that "originates on the network facilities of the
2 other carrier." These rules are expressed in terms of *two carriers* - one that originates
3 and one that terminates traffic.

4 **Q: How are "Transport" and "Termination" defined in the Subpart H rules?**

5 **A:** "Transport" is defined for purposes of the Subpart H rules, as "the transmission and any
6 necessary tandem switching of telecommunications traffic subject to Section 251(b)(5) of
7 the Act from the interconnection point between the two carriers to *the terminating*
8 *carrier's end office switch that directly serves the called party, or equivalent facility*
9 *provided by a carrier other than an incumbent LEC."* (emphasis added) (*See* 47 C.F.R.
10 Section 51.701(c)). "Termination" is defined in the next section of the rules as "the
11 switching of telecommunications traffic at the terminating carrier's end office switch, or
12 equivalent facility, and delivery of such traffic to the called party's premises." (*See* 47
13 C.F.R. Section 51.701(d).)

14 **Q: What relevant conclusion do you draw from the application of the relationship**
15 **between Time Warner Cable and Sprint to the definitions of Transport and**
16 **Termination in the FCC Rules?**

17 **A:** It is Time Warner Cable that provides switching functions and facilities for delivery of
18 traffic to the called party's premises. And it is Time Warner Cable that directly serves
19 the called party for a local call originated by a SENTCO customer to be terminated to a
20 Time Warner Cable customer. In the context of adopting these rules, the FCC explained
21 that the Transport and Termination of traffic subject to Section 251(b)(5) of the Act "is
22 intended for a situation in which two carriers collaborate to complete a local call." (*See*
23 *In the Matter of Implementation of the Local Competition Provisions in the*

1 *Telecommunications Act of 1996, First Report and Order*, 11 FCC Rcd 15499 ("*First*
2 *Report and Order*") at para. 1034.) These rules only apply to a Local Exchange Carrier
3 that originates or terminates a local call and not in this case where Sprint is only acting as
4 an "enabler" of the telephone exchange service that Time Warner Cable will offer in
5 competition with SENTCO. In fact, the only three-carrier arrangement even mentioned
6 by the FCC is adopting these rules is one in which access charges apply -- "a situation in
7 which three carriers -- typically, the originating LEC, the [interexchange carrier], and the
8 terminating LEC -- collaborate to complete a long distance call." (*Id.*)
9 Some carriers have designed novel arrangements and act as intermediary network
10 providers between originating and terminating LECs, sometimes referred to as "transit"
11 service arrangements. The intermediary carrier, however, is neither the originating nor
12 the terminating carrier in the context of applying the Subpart H Rules.
13 Moreover, such novel transit arrangements are not even a requirement under the
14 FCC's interconnection rules. There are no rules that establish obligations for carriers
15 under such three-party arrangements. In an arbitration proceeding between the
16 incumbent LEC, Verizon, and three competitive local exchange carriers in Virginia, the
17 FCC confirmed that the FCC's Rules do not address such three-party arrangements. (*See*
18 *Memorandum Opinion and Order*, CC Docket Nos. 00-218, 00-249, and 00-251 released
19 by the FCC on July 17, 2002 at para. 117.) Therefore, to the extent that Sprint provides
20 some novel form of intermediary service, it does so outside of the scope of the FCC's
21 interconnection rules, including outside the scope of the Subpart H Rules.
22 The inescapable fact is that in over 700 pages of the *First Report and Order* and
23 the FCC's implementing interconnection rules, neither the concepts of "transit service,"

1 "transit traffic," nor the word "transit" ever appears. And as I stated above, the only
2 three-party arrangement ever mentioned are those with interexchange carriers which are
3 subject to the terms of access, not Subpart H.

4 **Q: Are there any other indications that Sprint is not the carrier providing the retail**
5 **service to the end user?**

6 A: Yes. In Sprint's Amended Application filed in Application No. C-3204, at para. 17,
7 Sprint states that it intends to provide transport, switching and interconnection for the
8 origination and termination of local and long distance traffic to "be provided upon
9 request of wholesale customers within the state of Nebraska." In Sprint's Responses to
10 Interveners' Data Requests filed in Application No. C-3204 on September 21, 2004,
11 Sprint states in Response to Request No. 2 that "Sprint does not provide service at the
12 customer premise and there is no central office."

13 Request No. 5 under that same Date Request asks Sprint to confirm whether what
14 Sprint describes as "wholesale customers" would include Time Warner Cable in the
15 anticipated arrangement and, if so, to explain the network arrangements that Sprint will
16 have with Time Warner Cable. In response, Sprint admits that Time Warner Cable would
17 be the wholesale customer. Further, in response to Data Request No. 6, Sprint states:
18 "Sprint has no current plans to provide retail telecommunications services within the
19 geographic areas for which Sprint seeks certification pursuant to the Amended
20 Application. *Sprint is seeking certification so that it can provide services on a wholesale*
21 *basis to entities seeking to outsource functions necessary to provide voice services.*"
22 (emphasis added) Consistent with the foregoing statements, during cross examination,
23 Mr. Burt testified as follows at the hearing on Application No. C-3204:

1 Q. As an enabler, to use your term, will Sprint offer
2 telecommunications for a fee to the general public?
3 A. As an enabler – I want to make sure I understand what you
4 – when I say enabler, that is describing the wholesale
5 relationship we have with the cable company. *In that*
6 *instance, we are not providing a service to an end user.*
7 *The cable company provides the service.*" (emphasis
8 added)
9 (*See,* Transcript of Hearing, Application No. C-3204, 73:3-9).
10 **Q: Did Time Warner Cable describe its switching resources in connection with its**
11 **network arrangement that is being enabled by Sprint?**
12 **A:** Referring again to the Hearing Transcript in the Application No. C-3228 proceeding,
13 Time Warner Cable's witness confirmed that Time Warner Cable operates a soft switch
14 that will switch calls between Time Warner Cable customers, and calls from a Time
15 Warner Cable customer to a non-Time Warner Cable customer will be routed by Time
16 Warner Cable's soft switch to a gateway device and the call would then be routed to
17 Sprint. (*See,* C-3228 Transcript 13:11-14:15; 31:5-32:10)[1]
18 **Q: In Mr. Burt's testimony, page 16, line 361 through page 17, line 382, he refers to a**
19 **"Class 5 end office switch. What is meant by a "Class 5 end office switch?"**
20 **A:** A Class 5 end office switch is one that switches calls between two end user premises or
21 between a central office trunk and an end user premise. In contrast, a Class 4 tandem

[1] References to Sprint's Confidential Responses to Interveners' Data Requests in Application No. C-3204 are also relevant to this answer. However, pending the Commission's ruling on the pending Motion in Limine filed by Sprint in this case, SENTCO will refrain from reference thereto. Nonetheless, SENTCO reserves the right to supplement Mr. Watkins testimony following the Commission's ruling on such Motion.

1 switch switches calls between two sets of trunks, where those trunks are between the
2 Class 4 tandem and a Class 5 office, or trunks between the Class 4 tandem and another
3 Class 4 tandem. This classification indicates a switching hierarchy in the network.
4 **Q: Do the FCC's interconnection rules or *First Report and Order* address the Class 5**
5 **distinction?**
6 **A:** No. In 700 pages, the words "Class 5" do not occur. Instead, the FCC defines it rules
7 solely with respect to the concept of "end office" in the context of the Subpart H Rules.
8 And the FCC further defines this concept also to include the concept of an "equivalent
9 facility provided by a carrier other than an incumbent LEC." I would note that Mr. Burt
10 has "evolved" his discussion of network arrangement to claim now at p. 16, line 370 that
11 Time Warner Cable provides a "PBX-like switch." Mr. Burt attempts to manufacture a
12 new explanation apparently in an attempt to claim some new distinction. Mr. Burt has
13 conveniently omitted information that he and Time Warner Cable previously provided
14 regarding the fact that Time Warner Cable will switch calls to and from its own end
15 users. It does not matter whether the so-called Class 5 distinction can be applied
16 logically to a soft switch application of cable providers because the FCC has defined the
17 interconnection rules in terms of "end office" including the concept of an alternative,
18 equivalent application provided by a carrier other than an incumbent LEC. In this case,
19 Time Warner Cable is the carrier other than an incumbent, and it is Time Warner Cable
20 that is providing the equivalent application to that of an end office. No matter how
21 "PBX-like" Mr. Burt would have us believe Time Warner Cable's network application to
22 be, it is a mischaracterization of the facts of record to claim that Time Warner Cable will
23 not be providing end office switching when both Sprint and Time Warner Cable have

1 previously represented that Time Warner Cable provides an end office switching
2 function.

3 **Q: Can you explain the concept of end office?**

4 **A:** Yes. The FCC describes the concept of end office in its *First Report and Order* as the
5 last end-office switch closest to the end user to which traffic must be delivered for
6 termination to a customer's premises and this concept is reflected in the rule defining
7 "Termination." The concept of end office is the same as that used in the framework of
8 access. Interstate access tariffs define end office as "a local Telephone Company
9 switching system where Telephone Exchange Service customer station loops are
10 terminated for purposes of interconnection to each other and to trunks. This term
11 includes Remote Switching Modules/Systems served by a Host Central Office in a
12 different wire center." (*See* Tariff No. 5 filed by the National Exchange Carrier
13 Association, definitions section.) The interconnection rules extend this concept to those
14 switches that are equivalent and provided by competitive carriers.

15 From the descriptions provided by Time Warner Cable, it is apparent that the end
16 users to be served by Time Warner Cable in SENTCO's service area will not have
17 dedicated circuits or channels to the Sprint switch. When one Time Warner Cable end
18 user in Nebraska places a call to another Time Warner Cable end user in Nebraska, the
19 call will be switched to the called party by Time Warner Cable, not Sprint. (This is same
20 as with SENTCO. When an end user of SENTCO places a call to another SENTCO end
21 user, SENTCO switches that call to its destination where the called party is served by an
22 end office of SENTCO.) Moreover, it is apparent that while a call originated from
23 anywhere else in the public switched network may be switched at a higher level, tandem

1 basis by Sprint, such call will be delivered to Time Warner Cable's "PBX-like switch"
2 and this switch will be necessary for "end office" routing to the appropriate end user
3 premises of the customer served by Time Warner Cable. No amount of slight of hand on
4 the part of Mr. Burt will change this fundamental arrangement.

5 **Q: What conclusions do you draw from this analysis?**

6 **A:** It is *Time Warner Cable that is the provider of the end office for terminating calls to its*
7 *end user customers*; Time Warner Cable is the terminating carrier, and it is Time Warner
8 Cable that is providing the terminating carrier's end office switch that directly serves the
9 called party (or equivalent facility provided by a carrier other than an incumbent LEC) as
10 the FCC's rules define this function pursuant to the Subpart H rules.

11 **III. TIME WARNER CABLE IS THE COMPETING LOCAL EXCHANGE**
12 **CARRIER AND NOT SPRINT WHO IS AN "ENABLER" OF TIME WARNER**
13 **CABLE'S TELEPHONE EXCHANGE SERVICE THAT IS INTENDED TO**
14 **COMPETE WITH SENTCO.**
15

16 **Q: Have you reviewed Mr. Burt's testimony regarding Sprint's intent to hold itself out**
17 **"indiscriminately"?**

18 **A:** Yes.

19 **Q: Do you agree with Mr. Burt?**

20 **A:** No because a variety of facts state otherwise.

21 **Q: What facts are you referencing?**

22 **A:** First, the private contract between Sprint and Time Warner Cable is not public. In fact, I
23 had to sign a non-disclosure agreement so that I could review it for this case. Thus,
24 Sprint does not publicly hold itself out. Second, Mr. Burt admits that any agreement will
25 be individually tailored to the cable company and Sprint. Mr. Burt states at page 27, lines

610-612, that "the networks of the other providers will not be identical, nor will the amount of services purchased." Moreover, he states at page 27, lines 614-617 that "[b]ecause the Sprint/last-mile provider relations is a business relationship, some aspects of the final agreement will, of necessity, reflect business differences and will be negotiated separately." Third, Mr. Burt admits at page 27, lines 625-626 that there is no tariff in place by Sprint describing the business relationship that it will offer to a "last mile provider." Fourth, the only service that Mr. Burt unequivocally states will be offered "to the general public" is Sprint's offering of "exchange access." At pages 21-22, lines 493-499, Mr. Burt states that

> [i]n addition, it should be noted that exchange access is part of the service Sprint offers to the general public and the service Sprint provides to TWC and similarly situated providers. The exchange access is provided directly in Sprint's name, on all toll calls made and received by the customers. Sprint provides exchange access, which is unquestionably a telecommunications service, indiscriminately, regardless of who the toll carrier is, on a common carrier basis."

I note that "exchange access," as Mr. Burt acknowledges, is the function provided by a LEC to a toll carrier. Accordingly, one might conclude that because Mr. Burt says Sprint is providing exchange access that is tantamount to saying that all traffic it plans to deliver to or receive from SENTCO will be subject to access charges also to be assessed by SENTCO. Sprint can do this because its function in the arrangement it has described with Time Warner Cable is as a "tandem" operator, and a tandem operator can properly

1 assess access charges for the services it provides to toll carriers. In any event, however,
2 Sprint's role as an exchange access provider is for a service different that the holding out
3 for the provision of "local" traffic that is subject to Section 251(b)(5) that is originated
4 by or terminated to a Time Warner Cable end user. A tandem switching access provider
5 provides service to interexchange carriers, not end users.

6 While Mr. Burt indicates at pages 24-26 of his testimony that Sprint talked with a
7 number of potential cable companies (and he admits he was not involved in such
8 discussions), only Time Warner Cable is a wholesale customer of Sprint in Nebraska.
9 Accordingly, I do not believe that Mr. Burt has committed Sprint to a practice that
10 accepts all potential entities on something other an individualized basis and on specific
11 terms that will be negotiated, nor can Mr. Burt sustain his position that Sprint is holding
12 itself out indiscriminately through the private, non-public contract it has with Time
13 Warner Cable.

14 **Q: Do you have any opinion as to the reason that Mr. Burt makes this claim?**

15 **A:** Yes. Holding oneself out to provide services "indiscriminately" is one of the factors I
16 understand is considered when one is required to determine if an entity is a "common
17 carrier." I also understand that the FCC has determined "common carriers" to be
18 "telecommunications carriers" and only telecommunications carriers can seek the
19 arrangements that are addressed in the interconnection agreement at issue in this
20 proceeding. These concepts were pivotal in the Iowa Utilities Board's decision in Docket
21 No. ARB-05-2, a copy of which decision is attached to SENTCO's Motion to Dismiss or,
22 in the Alternative, Response to the Petition for Arbitration filed herein.

1 **Q: So if Sprint files the tariff that Mr. Burt states at page 27, lines 624-626, that Sprint**
2 **is willing to do, Sprint could seek the interconnection arrangements at issue on**
3 **behalf of Time Warner Cable?**
4 **A:** No. As I indicated above, since Sprint is not offering the end office switching (or its
5 functional equivalent) or termination to the end user, only Time Warner Cable can
6 properly seek the interconnection arrangement at issue in this proceeding, and that is the
7 conclusion that the Commission has already agreed should be the case in its C-3228
8 Order.
9 As the FCC concluded in its *First Report and Order* at para. 1045, " pursuant to
10 section 251(b)(5) of the Act, all local exchange carriers, including small incumbent LECs
11 and small entities offering competitive local exchange services, have a duty to establish
12 reciprocal compensation for the transport and termination of local exchange service."
13 Time Warner Cable, as the entity offering competitive local exchange services, has the
14 duty to establish the transport and termination arrangement with SENTCO.
15 **Q: Do you agree with Mr. Burt's assertion at pages 22-23 of his testimony that prior**
16 **Commission actions approving an interconnection agreement with ALLTEL have**
17 **any bearing on this proceeding?**
18 **A:** No. First, SENTCO was not party to the discussions and negotiations that some other
19 LEC had with Sprint. Accordingly, no one knows what "gives and takes" were included
20 in those discussions and SENTCO cannot be bound by them. Second, whether an
21 incumbent LEC wants to seek arrangements with some other entity that fall outside of the
22 requirements of the Act is up to that incumbent and I have reviewed Attachment A to
23 SENTCO's Response to Sprint's Petition for Arbitration filed herein that specially states

1 that SENTCO did not engage in those discussions. Finally, Mr. Burt's purported fear
2 about what ALLTEL may or may not do once the Commission concludes that Sprint's
3 position in this proceeding should be rejected is nothing more than a scare tactic,
4 presumably geared to provide pause to the Commission as to how properly to implement
5 the requirements of the Act. In any event, if Sprint's concern was real, I am confident
6 that Sprint considered that possibility when it negotiated its arrangement with ALLTEL
7 and included provisions to address that possibility. If Sprint did not, then any result
8 arises from Sprint's conduct and not the Commission's actions in this proceeding.
9 **Q: Does this conclude your rebuttal testimony?**
10 **A:** Yes.

SUMMARY OF WORK EXPERIENCE AND EDUCATION

Steven E. Watkins

July 2005

My entire 29-year career has been devoted to service to smaller, independent telecommunications firms that primarily serve the small-town and rural areas of the United States.

I have been a consultant working with the firm of Kraskin, Moorman & Cosson, LLC since June, 1996 (formerly known as Kraskin, Lesse & Cosson, LLC). The firm concentrates its practice in providing professional services to small telecommunications carriers. My work at Kraskin, Moorman & Cosson, LLC, has involved assisting smaller, rural, independent local exchange carriers ("LECs") and competitive local exchange carriers ("CLECs") in their analysis of a number of regulatory and industry issues, many of which have arisen with the passage of the Telecommunications Act of 1996. I am involved in regulatory proceedings in several states and before the Federal Communications Commission on behalf of small LECs. These proceedings are examining the manner in which the Act should be implemented. My involvement specifically focuses on those provisions most affecting smaller LECs.

I have over the last nine years instructed smaller, independent LECs and CLECs on the specific details of the implementation of the Act including universal service mechanisms, interconnection requirements, and cost recovery. On behalf of clients in several states, I have analyzed draft interconnection agreements and conducted interconnection negotiations and arbitrations pursuant to the 1996 Act.

For 12 years prior to joining Kraskin, Moorman & Cosson, LLC, I held the position of Senior Industry Specialist with the Legal and Industry Division of the National Telephone Cooperative Association ("NTCA") in Washington, D.C. In my position at NTCA, I represented several hundred small and rural local exchange carrier member companies on a wide array of regulatory, economic, and operational issues. My work involved research, analysis, formulation of policy, and expert advice to member companies on industry issues affecting small and rural telephone companies.

My association work involved extensive evaluation of regulatory policy, analysis of the effects of policy on smaller LECs and their rural customers, preparation of formal written pleadings in response to FCC rulemakings and other proceedings, weekly contributions to association publications, representation of the membership on a large number of industry committees and task forces, and liaison with other telecom associations, regulators, other government agencies, and other industry members. I also attended, participated in and presented seminars and workshops to the membership and other industry groups too numerous to list here.

For those not familiar with NTCA, it is a national trade association of

Attachment A

approximately 500 small, locally-owned and operated rural telecommunications providers dedicated to improving the quality of life in rural communities through advanced telecommunications. The Association advocates the interests of the membership before legislative, regulatory, judicial, and other organizations and industry bodies.

Prior to my work at NTCA, I worked for over eight years with the consulting firm of John Staurulakis, Inc., located in Seabrook, Maryland. I reached a senior level position supervising a cost separations group providing an array of management and analytical services to over 150 small local exchange carrier clients. The firm was primarily involved in the preparation of jurisdictional cost studies, access rate development, access and exchange tariffs, traffic analysis, property records, regulatory research and educational seminars.

For over ten years during my career, I served on the National Exchange Carrier Association's ("NECA") Industry Task Force charged with reviewing and making recommendations regarding the interstate average schedule cost settlements system. For about as many years, I also served in a similar role on NECA's Universal Service Fund ("USF") industry task force.

I graduated from Western Maryland College in 1974 with a Bachelor of Arts degree in physics. I have also attended industry seminars too numerous to list on a myriad of industry subjects over the years.

During my career representing small telecommunications firms, I estimate that I have prepared formal written pleadings for submission to the Federal Communications Commission on behalf of NTCA member and Kraskin, Lesse & Cosson client LECs in over two hundred proceedings. I have also contributed written comments in many state proceedings on behalf of Kraskin, Moorman & Cosson client LECs. I have provided testimony in proceedings before the Georgia, Pennsylvania, Indiana, Kentucky, Missouri, Nebraska, Minnesota, Montana, Tennessee, Kansas, South Carolina, New Mexico, West Virginia, Louisiana, Iowa, and South Dakota public service commissions. Finally, I have testified before the Federal-State Joint Board examining jurisdictional separations changes.

BEFORE THE NEBRASKA PUBLIC SERVICE COMMISSION

IN THE MATTER OF THE APPLICATION OF TIME WARNER CABLE INFORMATION SERVICES (NEBRASKA), LLC d/b/a TIME WARNER CABLE FOR A CERTIFICATE OF AUTHORITY TO PROVIDE LOCAL AND INTEREXCHANGE VOICE SERVICES WITHIN THE STATE OF NEBRASKA.	)	**APPLICATION NO. C-3228**

[SELECTED PAGES FROM NEBRASKA PUBLIC SERVICE COMMISSION TRANSCRIPT]

Attachment

B

1 P R O C E E D I N G S

2

3 COMR. LANDIS: The hearing in Application
4 Number C-3228 will come to order. I am Frank Landis,
5 and I will be the hearing officer this morning.
6 Joining me here at the Lincoln site is Commissioner
7 Rod Johnson. Joining us at the McCook site is
8 Commissioner Jerry Vap who is the chairman of our
9 Commission. Anne Boyle, Commissioner Boyle, is a
10 speaker at a conference in San Francisco today or she
11 would be here. She has a great deal of interest in
12 this particular docket. Lowell Johnson has been
13 undergoing some medical treatments and he may or may
14 not be here, but, of course, he has an abiding
15 concern in this docket, also. Shana Knutson is here
16 at the Lincoln site. She is the staff attorney who
17 is handling this particular docket. Also here in the
18 Lincoln site is our attorney, Angela Melton. Angela
19 is handling a companion case which is Sprint CLEC
20 application. So, we have asked Angela to sit in on
21 this hearing today. I understand that Jill Gettman
22 had a motion she wanted to file.
23 MS. KNUTSON: I believe she had a motion pro
24 hac vice. She wanted to move the admittance of Mr.
25 Goodwin and she is on the phone.

1 customer?

2 A Sure. In the case of a Time Warner Cable

3 telephone customer calling anyone else that is not on

4 the Time Warner Cable network, so, someone served by

5 another telephone company, the call would leave the

6 customer premise in Internet Protocol or packet form.

7 Our soft switched device would recognize the

8 telephone number dialed as being a non-Time Warner

9 Cable telephone number and would route that call to

10 what is called a gateway device that would convert

11 the call from Internet Protocol form to traditional

12 circuit switched or TBM format. At which point, it

13 would be passed to Sprint Communications Corporation

14 which would take the call and terminate it to its

15 final destination. Whether that be a local call

16 within Lincoln, for instance, or an intrastate toll

17 call somewhere else in Nebraska or an interstate or

18 an international call. In that case, Sprint would,

19 on behalf of Time Warner Cable, pay inter-carrier

20 compensation as I mentioned previously either

21 reciprocal compensation, intrastate access, or

22 interstate access based on the originating number and

23 the terminating number. Would also in the case of

24 911 calls, 711 telecommunications, relay service

25 calls or directory assistance calls, pass those to

1 other CLECs in other parts of the country.
2 Q In Exhibit E to your application filed in
3 this matter, the second page of Exhibit E, Time
4 Warner describes a, quote, partnership and while not
5 therein named, it is obviously a partnership with
6 Sprint that you are referring to. Wouldn't that be
7 correct?
8 A It is in terms of the party. I think the
9 term partnership was a misuse of the word in the
10 sense that it was not intended to connote a legal
11 term of art. It is not a partnership. It is a
12 relationship.
13 Q So, isn't it correct that in fact, the
14 relationship between Time Warner and Sprint is that
15 of an independent contractor as opposed to, for
16 example, a joint venture or a legal partnership?
17 A Yes. I would view us as a customer of
18 Sprint, a wholesale customer in many respects.
19 Q I didn't hear the last part.
20 A As a wholesale customer of Sprint's.
21 Q Thank you. On Page 3 of your testimony,
22 Lines 15 through 25, you assert that Time Warner,
23 quote, has extensive managerial and technical
24 experience in the telecommunications industry. If
25 you need to refer to it again, the three ring binder

1 background is in the practice of telecommunications
2 law, in private practice at the Federal
3 Communications Commission, and with an Internet
4 telephony company prior to joining Time Warner Cable.
5 Q Okay. Can you please describe the services
6 that Time Warner Cable Information Services intends
7 to provide to customers in the state of Nebraska?
8 A The applicant proposes to provide voice
9 services using voice over Internet Protocol
10 technology. To the consumer, the consumer will be
11 offered a bundle of local and long distance voice
12 services packaged as a bundle. That would include
13 certain vertical features such as call waiting, call
14 waiting with Caller ID, and Caller ID. Also included
15 in the services would be Enhanced 911 functionality
16 access to telecommunications relay service, the
17 ability to port a telephone number, access to
18 international calling, access to directory
19 assistance, and operator services, directory
20 listings, and the ability to call anyone on the
21 public switched telephone network or to receive a
22 call from anyone on the public switched telephone
23 network.
24 Q Will you be paying inter-carrier
25 compensation for these services?

1 the appropriate location as well.

2 Q So, who is ultimately responsible for

3 payment of access charges to the LECs?

4 A As the originating provider, the applicant

5 is responsible for that. We have made arrangements

6 contractually through Sprint to have them administer

7 and actually make those payments based on again the

8 originating number and the terminating number so that

9 the call is treated jurisdictionally as it would be

10 in the normal course.

11 Q In the application, there is a Section 2

12 reservation of rights. Can you please describe that

13 for us?

14 A Sure. Based on the number of proceedings

15 going on throughout the country at the state and

16 federal level relating to voice over Internet

17 Protocol technology and voice services using voice

18 over Internet Protocol technology. We have included

19 in our application a reservation of rights stating

20 what we believe would be the case even without

21 associating. That should the law change, we would

22 abide by the ruled law if the FCC, a state

23 commission, the state legislature, the Congress,

24 changed the status of voice over Internet Protocol.

25 Services and the proposed services that we will be

1 offering fall within that definition. So, just a
2 statement that while we agree and submit to the
3 jurisdiction of the Commission, should the law
4 change, we would abide by any change in future law.
5 Unless and until that law changes, we are submitting
6 and agreeing to the jurisdiction of the Nebraska
7 Public Service Commission.
8 Q As far as your relationship with Sprint goes
9 to terminate traffic, do you intend to make Sprint
10 responsible to your end users for service quality or
11 is it that responsibility going to lie with Time
12 Warner?
13 A All obligations with respect to end user
14 customers, customer service, and the provision of
15 service to end users is entirely with Time Warner
16 Cable information services.
17 Q Likewise, does Time Warner intend to make
18 Sprint responsible to this Commission for compliance
19 with the Commission's rules and regulations for the
20 service offerings you have in the state?
21 A No. As the provider of service to end users
22 and as an applicant for a certificate of authority,
23 the applicant is fully responsible for all
24 obligations pursuant to rule and statute of this
25 Commission.

1 I asked you. Is there any basis that you know of to
2 support your testimony you gave a moment ago that
3 Sprint is already terminating calls to the Southeast
4 Nebraska service area?
5 A I said that, again -- based on -- to the
6 extent that Sprint has retail customers in the state
7 of Nebraska, my understanding would be, and I don't
8 have personal knowledge of this, that it can
9 terminate calls to all other customers located in
10 Nebraska.
11 Q In my hypothetical, would the Time Warner
12 customer be Sprint's retail customer or Time Warner's
13 retail customer?
14 A With the Time Warner Cable, the originating
15 caller in your scenario --
16 Q Right.
17 A Time Warner Cable's customer exclusively.
18 Q So, those scenarios that Sprint has today
19 where it is serving its retail customers has nothing
20 to do with the arrangement that you are proposing
21 since your end users will be Time Warner's retail
22 customers and not Sprint's. Isn't that correct?
23 A Other than the fact that when a call from a
24 Time Warner customer reaches Sprint, Sprint's
25 obligation is to carry and terminate that call, and

1 Q Just to confirm, in the arrangement that is
2 being proposed between Time Warner and Sprint, Sprint
3 will not be providing any retail services to Time
4 Warner customers. Is that true?
5 A Sprint has no relationship with any end user
6 customer of Time Warner Cable.
7 Q Does Time Warner intend to request any
8 interconnection arrangements with any incumbent LECs
9 in Nebraska?
10 A I can't answer for the future at this point.
11 We have not requested any interconnection and have no
12 immediate plans to do so. However, I can't speak for
13 the indefinite future.
14 Q Again, going back to the Sprint-Time Warner
15 agreement, and if you need a section reference,
16 Section 9.2, and my intent again is to not refer to
17 the content of that section directly, is it true that
18 in the event that it is concluded by Time Warner that
19 Sprint is unable to reach an interconnection
20 arrangement with one or more incumbent LECs, that
21 Time Warner reserves to itself the right to directly
22 negotiate and seek interconnection with an incumbent
23 LEC?
24 A Yes, we have the right to do so. We reserve
25 that right.

1 Q Does Time Warner Cable intend to provide
2 telephone relay service to customers in the state of
3 Nebraska?
4 A Yes.
5 Q Does Time Warner Cable intend to provide
6 operator services to customers in the state of
7 Nebraska?
8 A Yes, customers will be able to make and
9 receive collect calls and other operator assisted
10 calls.
11 Q Can you explain how calls are terminated
12 from one Time Warner customer to another Time Warner
13 customer?
14 A In the case of a Time Warner Cable
15 customer in Nebraska calling another Time Warner
16 Cable telephone customer, the call would be handled
17 entirely by Time Warner Cable on its own network.
18 So, a call would leave the customer's premise and be
19 carried on Time Warner Cable's network and be routed
20 to the other Time Warner Cable customer, never
21 touching the public switched telephone network. In
22 that case, the call would be in Internet Protocol or
23 packet form for the entire duration of the call.
24 Q Can you explain how a call would be routed
25 between a Time Warner customer and a non-Time Warner

1 would be located within the Falls City, Nebraska,
2 exchange to complete a local call to a southeast
3 Nebraska telephone customer also located in that
4 exchange.
5 A A call originated by a Time Warner Cable
6 customer in that exchange would traverse, and I use
7 the term Time Warner Cable generally here. I mean,
8 the applicant is doing business as Time Warner Cable
9 but to traverse the Time Warner Cable cable
10 facilities, leaving the home over the cable
11 facilities in packet form, meaning the voice messages
12 spoken into phones be digitized and packetized could
13 leave the home in packet form, be routed to Time
14 Warner Cable's facilities, Time Warner Cable soft
15 switched device would recognize that call as being an
16 off-net call or one made to a non-Time Warner Cable
17 customer.
18 Q Let me interrupt you. Where would the soft
19 switch be located?
20 A The soft switch is located in, and I believe
21 it is in the application, Kansas City.
22
23 INTERROGATION 0214
24 By Commissioner Landis:
25 Q If I might interrupt. Is that what you

1 refer to as a gateway device?

2 A No.

3 Q Is this off-switch.

4 A The gateway device would be located in

5 Nebraska. The soft switch device would be

6 responsible for the routing of the call, would

7 recognize the call as being not destined for a Time

8 Warner Cable telephone customer. Would therefore

9 route the call to a gateway device located in

10 Nebraska.

11

12 FURTHER CROSS-EXAMINATION

13 By Mr. Schudel:

14 Q Where in Nebraska?

15 A In Lincoln.

16 Q All right.

17 A It would be transformed from Internet

18 Protocol format into traditional circuits which

19 format and would be passed to Sprint.

20 Q Where would the point of interconnection

21 with Sprint be?

22 A It would be at the point of the gateway.

23 Q In Lincoln, Nebraska.

24 A Yes.

25 Q Please continue.

Nebraska Public Service Commission

COMMISSIONERS:
'NE C. BOYLE
JWELL C. JOHNSON
ROD JOHNSON
FRANK E. LANDIS
GERALD L. VAP

EXECUTIVE DIRECTOR:
ANDY S. POLLOCK

300 The Atrium, 1200 N Street, Lincoln, NE 68508
Post Office Box 94927, Lincoln, NE 68509-4927
Website: www.psc.state.ne.us
Phone: (402) 471-3101
Fax: (402) 471-0254

NEBRASKA CONSUMER HOTLINE:
1-800-526-0017

November 24, 2004

CERTIFICATION

To Whom It May Concern:

I, Andy S. Pollock, Executive Director of the Nebraska Public Service Commission, hereby certify that the enclosed is a true and correct copy of the original order made and entered in C-3228 on the 23rd day of November, 2004. The original order is filed and recorded in the official records of the Commission.

IN TESTIMONY WHEREOF, I have hereunto set my hand and affixed the Seal of the Nebraska Public Service Commission, Lincoln, Nebraska, this 23rd day of November, 2004.

Sincerely,

Andy S. Pollock
Executive Director

ASP:ab

Enclosure

pc: Jill Gettman, Kutak Rock LLP, The Omaha Building, 1650 Farnam Street, Omaha, NE 68102-2186
Loel P. Brooks, #15352, Brooks, Pansing Brooks, PC, LLO, 948 Wells Fargo Center, 1248 O Street, Lincoln, NE 68508-1424
Letty S.D. Friesen, AT&T Law Department, 1875 Lawrence Street, Suite 1575, Denver, CO 80202
Timothy J. Goodwin, Qwest Services Corporation, 1801 California, Suite 4900, Denver, CO 80202
Steve G. Seglin, #13756, Crosby Guenzel. LLP, Federal Trust Building, 134 South 13th Street, Suite 400, Lincoln, NE 68508
Paul M. Schudel, #13723/James A. Overcash, #18627, Woods & Aitken, LLP, 301 South 13th Street, Suite 500, Lincoln, NE 68508
Jack L. Shultz, #15472, Harding, Shultz & Downs, 800 Lincoln Square, 121 South 13th Street, P.O. Box 82028, Lincoln, NE 68501-2028
Timothy F. Clare, #19970/Troy S. Kirk, #22589, Rembolt, Ludtke & Berger, LLP, 1201 Lincoln Mall, Suite 102, Lincoln, NE 68508
Ellen Thompson, Department of Revenue, P.O. Box 94818, Lincoln, NE 68509-4818
Travis S. Tyler, Frasier, Stryker, Meusey, Olson, Boyer & Bloch, P.C., 500 Energy Plaza, 409 South 17th Street, Omaha, NE 68102

Attachment C

Printed with soy ink on recycled paper

BEFORE THE NEBRASKA PUBLIC SERVICE COMMISSION

In the Matter of the Application of Time Warner Cable Information Services, LLC, d/b/a Time Warner Cable, Nebraska, Stamford, Connecticut, for a Certificate of Authority to provide local and interexchange voice services within the state of Nebraska.	)	Application No. C-3228 GRANTED Entered: November 23, 2004

APPEARANCES:

For the Applicant:
Travis S. Tyler
Russell Westerhold
Fraser, Stryker, Meusey, Olson, Boyer & Bloch, PC
500 Energy Plaza
409 South 17th Street
Omaha, Nebraska 68102

For the Intervenors:
Southeast Telephone Company, Hemingford Cooperative Telephone Company, Rural Independent Companies and Alltel Nebraska Inc.
Paul M. Schudel
James A. Overcash
Woods & Aitken, LLP
301 South 13th Street
Suite 500
Lincoln, Nebraska 68508

For Nebraska Telecommunications Association:
Jack L. Shultz
800 Lincoln Square
121 South 13th Street
P.O. Box 82028
Lincoln, Nebraska 68501

For Qwest Communications Corporation:
Jill Vinjamuri Gettman
Kutak Rock LLP
The Omaha Building
1650 Farnam Street
Omaha, Nebraska 68102
and
Timothy Goodwin
1801 California
Suite 4900
Denver, Colorado 80202

NOV 2004 RECEIVED WOODS, AITKEN

Printed with soy ink on recycled paper

For Rural Independent Intervenors:
Timothy F. Clare
Troy S. Kirk
Rembolt, Ludtke & Berger, LLP
1201 Lincoln Mall
Suite 102
Lincoln, Nebraska 68508

For AT&T:
Loel P. Brooks
Brooks, Pansing Brooks PC, LLO
984 Wells Fargo Center
1248 O Street
Lincoln, Nebraska 68508
and
Gary Witt
1875 Lawrence Street
Suite 1575
Denver, Colorado 80202

For the Commission:
Shana Knutson
300 The Atrium
1200 N Street
Lincoln, Nebraska 68508

BY THE COMMISSION:

By Application filed July 17, 2004, Time Warner Cable Information Services, Nebraska LLC, d/b/a Time Warner Cable (TWCIS or Applicant), Stamford, Connecticut, seeks authority to provide local and interexchange voice services within the state of Nebraska. Notice of the application was published in The Daily Record, Omaha, Nebraska, on July 21, 2004. Petitions of Formal Intervention were filed by the following: Southeast Telephone Company; Alltel Nebraska Inc.; Hemingford Cooperative Telephone Company; the Rural Independent Companies; the Nebraska Telecommunications Association, Qwest Communications Corporation; Benkelman Telephone Company; Arapahoe Telephone Company; Cozad Telephone Company; Curtis Telephone Company; Diller Telephone Company; Glenwood Telephone Membership Corporation; Keystone-Arthur Telephone Company; Wauneta Telephone Company; and Mainstay Communications. AT&T filed a Petition for Informal Intervention. A hearing on the application was held in the Commission Library on September 17, 2004, with appearances as shown above.

Printed with soy ink on recycled paper

E V I D E N C E

TWCIS is a limited liability company owned by Time Warner Cable Inc. and Time Warner Entertainments-Advance/Newhouse Partnership. The ultimate corporate parent of each of these entities is Time Warner Cable Inc. TWCIS seeks to provide facilities-based competitive local and long distance Internet Protocol voice services to customers in the State of Nebraska that have access to the cable facilities of Time Warner Cable in the Nebraska communities of Lincoln, Fremont, Columbus, York, Nebraska City, Seward, Crete, Fairbury, Falls City, Tecumseh, David City, Auburn, Pawnee City, Humboldt, Denton, and Table Rock. The application was made pursuant to Neb. Rev. Stat. §§ 86-128 and 86-129 (2002 Cum. Supp.) and Title 291, Article 5 §§ 002.49 and 003.12A of the Nebraska Public Service Commission Telecommunications Rules and Regulations.

Initially, Applicant's service will be offered only to customers who subscribe to its high-speed modem data service. The Applicant's service will be offered on a bundled, flat-rate basis and will allow local and long distance calling in addition to operator services, directory assistance, white page directory listings, E911 services, outbound 800 toll free calling, local number portability and access to telephone relay services. Applicant's customers will be able to call and be called by any other IP voice service subscriber of TWCIS. Customers will also have access to the public switched telephone network and thus will be able to call and be called by all other parties connected to the public switched telephone network. Applicant will bill for the digital phone monthly package in advance, although additional charges for international calling, directory assistance and operator services will be billed in arrears. Applicant does not plan to collect deposits.

Applicant further testified that it will contribute to the federal and state universal service funds in accordance with applicable law. Applicant's voice services will also fully comply with all requirements applicable to telecommunications services including all applicable E911 obligations, CALEA, universal service and telephone relay service requirements. Applicant will provide customers with access to directory assistance, operator assistance and directory listings.

0219

The service provided by Applicant will be carried over its proprietary IP network and will not travel over the public Internet. This provides Applicant with sufficient control to ensure that its services meet or exceed the applicable technical standards for service quality. All appropriate intercarrier

Printed with soy ink on recycled paper

compensation will be paid on calls originating from Applicant's network and all jurisdictional determinations and payments will be made in accordance with existing compensation regimes. Applicant will rely on its underlying carrier, identified as Sprint, for further technical and managerial support.

Mr. Steven E. Watkins testified for the Formal Intervenor Southeast Nebraska Telephone Company. His testimony was also represented as the viewpoints and concerns of the other rural independent companies. Mr. Watkins observed that this application is unique because the result of Applicant's proposal would be that it would not enter into interconnection agreements with ILECs. Mr. Watkins further testified that while Applicant intends to serve the end-user with local exchange service, it does not intend to have arrangements directly with the other carriers in Nebraska that terminate a call from a Time Warner end user or that originate a call to that end user.

OPINION AND FINDINGS

As the Hearing Officer previously stated in the prehearing conference, the Commission's review of this Application is based upon the Commission's Rules in the Neb. Admin. Code Title 291, Ch. 5, Rule 002.49. Accordingly, the Commission considers this application for authority in light of the following criteria and standards established in the Commission's telecommunications rules:

(a) Whether the Applicant has provided the information required by the Commission;

(b) Whether the Applicant has provided a performance bond, if required;

(c) Whether the Applicant possesses adequate financial resources to provide the proposed service;

(d) Whether the Applicant possesses adequate technical competence and resources to provide the proposed service;

(e) Whether the Applicant possesses adequate managerial competence to provide the proposed service; and

(f) Whether granting the Applicant a certificate preserves and advances universal service, protects the public safety and welfare, ensures the continued quality of telecommunications services and safeguards the rights of consumers, pursuant to Section 253(b) of the Act.

Printed with soy ink on recycled paper

Applicant has demonstrated that it meets the standards of financial, technical and managerial competence. No party in this proceeding refuted the Applicant's competence.

The Applicant's ability to meet the Commission's public interest criteria was a disputed issue. Southeast Nebraska Telephone Company (Southeast) in particular raised concerns with Applicant's ability to provide access to emergency services or to provide service in the event of a power loss. Applicant committed to filing its disclaimers to customers in this regard and to working with the Commission in the event that it has concerns with these issues. The Commission finds that these commitments sufficiently address the concerns raised in this regard.

The Commission has lingering concerns, however, with the impact of Applicant's request for authority in Southeast's territory where the rural exemption has not been lifted, and with respect to Mr. Watkin's testimony that this Applicant unlike other carriers, does not plan to enter into an interconnection agreement with the incumbent local exchange carrier (ILEC). Rather, Applicant testified that it has entered into an agreement with Sprint, a competitive local exchange carrier, for the exchange of traffic. The Commission agrees with Mr. Watkins that this presents a unique circumstance and that new issues with respect to rural carriers are likely to arise. The Commission finds that the concerns proffered by Mr. Watkins although uncontroverted, did not rise to the level to defeat Applicant's evidence that a grant would serve the public interest. While we find that Applicant met its burden of proof, the Commission recognizes there are some legitimate concerns regarding when and how the rural exemption is addressed. The substance of Mr. Watkin's concerns will be more appropriately addressed at the point at which there has been a request to lift the rural exemption and when interconnection agreement approval is requested. The Commission believes that Applicant as the retail provider who seeks to compete in a rural incumbent's area and who benefits from this competition should be likewise accountable to the Commission during this process. Accordingly, prior to the offering of service in competition with Southeast Nebraska Telephone Company or any other rural telephone company under this certificate the Applicant must:

1. File written notice with the Commission when a bona fide request has been sent either by it or its underlying carrier to a rural ILEC.

0221

Printed with soy ink on recycled paper

2. The rural ILEC then will have 30 days in which to notify the Commission that it intends to raise the rural exemption as a reason not to negotiate or arbitrate an agreement.

3. The Commission will rule on the rural exemption in accordance with the Telecommunications Act of 1996 (Act).

4. The parties will either negotiate or arbitrate an agreement. The parties will file the agreement for approval. The Commission will then approve or reject the agreement in accordance with the Act.

The Commission finds Applicant will be required to notify the Commission of the above-listed events and triggers and may be considered by the Commission as a necessary party in future Commission proceeding where the issue involves when and how Applicant's retail service is to be offered in competition with a rural carrier.

Moreover, in all certificated areas, before the Applicant is allowed to provide local service to its users, it must either:

1. Through negotiation or arbitration, reach an interconnection/resale agreement with the pertinent local exchange carrier and receive Commission approval of the interconnection/resale agreement; or

2. In the event a certified local carrier provides a wholesale tariff, purchase rates from that tariff, and file its own tariff.

The opinions and findings in this Order carry no precedential value other than establishing minimum standards and criteria to apply when considering applications to provide interexchange and local exchange service in the above-mentioned territories. All telecommunications carriers seeking such a certificate must demonstrate that they meet, at a minimum, the standards and criteria set forth herein.

This order does not terminate, waive or in any manner diminish the exemptions and protections created by the Act for rural carriers, as defined by the Act. This order does not address the issue of the rural local exchange carrier exemption

Printed with soy ink on recycled paper

under the Act. Rural exemptions may be terminated, suspended or modified only as provided in Section 251(f) of the Act. Prior to providing local exchange service in any area in the state of Nebraska, Applicant must file tariffs in accordance with the provisions of section 002.21 of Neb. Admin. Code title 291, chapter 5.

As a provider of local telecommunications service in the state of Nebraska, Applicant is subject to the same laws, rules and regulations, both federal and state (including any laws, rules or regulations regarding universal service, restrictions on joint marketing and quality of service), applicable to any other local exchange company except those obligations imposed on ILECs pursuant to Section 251(c) of the Act.

Finally, the Commission turns to the objections of AT&T. During the course of the hearing, AT&T objected to the admittance of the testimony filed by Southeast Telephone Company on the grounds that it did not receive notice of the extension of time for intervenors to file testimony and it was not served with Southeast's prefiled testimony.[1] AT&T objected further to the fact that it was not given copies of the testimony prior to the hearing. Accordingly, AT&T asserted at the hearing and in its post-hearing brief, due process was not fulfilled. The Hearing Officer gave AT&T the opportunity to assert its objection, but overruled this objection.

Upon review of the Commission's rules, the Commission finds that due process was not subverted by the Hearing Officer's

---

[1] AT&T further argues in its post-hearing brief that the Commission has continually failed to serve it with its orders in this proceeding. AT&T insinuates the Commission had a malicious intent to overlook AT&T in this proceeding. As an example, AT&T states that it has not yet been served a copy of the Commission's Hearing Officer Order of August 6, 2004. However, we note for the record that AT&T filed its Petition for Informal Intervention on August 8, 2004. Accordingly, the Commission would not have served a copy of its August 6, 2004, Order on AT&T because it was prior to their interest being on record. However, the Commission further notes that it erroneously did not serve a copy of the Hearing Officer's Order denying oral argument and denying the requested continuance which also moved the deadline for prefiled testimony. This was due to an administrative error. There was no malice in this oversight and the Commission believes that such error was harmless as AT&T could not have changed its position and AT&T was given the opportunity at the hearing to object and to request portions be stricken from the record.

Moreover, upon review of this case, it became apparent that neither the Applicant nor Southeast served a copy of its prefiled testimony on AT&T, the Commission believes this to be an oversight on the part of both parties and cannot deduce from the record that there was an intention to exclude AT&T by either party.

Printed with soy ink on recycled paper

decision to extend the comment deadline. After discovery responses had been filed, the Commission received a Motion to Compel from Southeast regarding Request No. 6. Simultaneous with that Motion to Compel, the Commission was also informed that the Applicant and Southeast continued to communicate to resolve the discovery dispute and Applicant had agreed to provide Southeast with further information responsive to Request No. 6. The Commission did not schedule an oral argument on the Motion to Compel on that basis.

On September 9, 2004, the Commission received a Motion to set Oral Argument on the Motion to Compel and also received a Motion to Continue the Hearing from Southeast. In support of the Motion to Continue the Hearing, Southeast stated in writing that because it had just received information from the Applicant responsive to Request No. 6, it needed additional time to prepare for the hearing. The Hearing Officer overruled those motions and instead, because information was just exchanged between the parties, decided to extend the time frame for intervenor testimony from the original due date of September 10, 2004 (which was the deadline respective to all intervenors, including informal intervenors) to September 16, 2004 at 2:30.[2] The extension of time was granted for all intervenors.

Rule 017 of Commission Procedure provides the Hearing Officer with the power to rule on issues, including substantive issues, as long as the ruling is not dispositive of the case. The Hearing Officer in this case ruled on procedural motions, i.e., the Motions for Continuance and for Oral Argument which arose during a discovery dispute, and said rulings were not dispositive to this case. In the interest of time, oral argument was not scheduled on either the discovery motion or the motion for continuance; rather, the Commission dealt with the issues on the pleadings. This was permissible procedurally and fully within the discretion of the hearing officer.

Finally, at the hearing, it was argued that an informal intervenor could not offer objections into the record because of their limited status. While it is true that an informal intervenor cannot elicit testimony from others during the hearing, cannot participate in discovery, and is limited to a prefiled statement of one witness at the hearing, there is no rule which explicitly provides that an informal intervenor may

[2] The Commission notes that its request for prefiled testimony is purely discretionary. Prefiled testimony is generally not required except by Commission or Hearing Officer order. The purpose of requesting prefiled testimony is to assist the Commission and to expedite the hearing.

Printed with soy ink on recycled paper

not make oral or written objections on the record. The Commission believes it is in the discretion of the Hearing Officer to entertain objections from informal intervenors. Generally speaking, where it is discretionary, the Commission believes it good public policy to err in favor of including information, rather than excluding it. In this case, the Hearing Officer heard the objections of the informal intervenor and made his ruling. The Hearing Officer included the testimony of Mr. Watkins and overruled the motion to strike or exclude the testimony. Upon further review the Commission finds this to be a proper ruling. Time Warner's application and testimony contained a reservation of rights regarding jurisdiction. We view testimony of Mr. Watkins as responsive to this reservation of rights and not outside the scope of the proceeding. The testimony of Mr. Watkins contained the intervenors' concerns with the enforceability and operation of the reservation of rights clause and was not a broad discourse on the issue of regulating VoIP generally. The Commission has considered the testimony presented by all interested persons and gives the testimony the weight that it merits in this proceeding.

O R D E R

IT IS THEREFORE ORDERED by the Nebraska Public Service Commission that Application No. C-3228 filed by Time Warner Cable Information Services be and it is hereby granted to the extent provided herein.

IT IS FURTHER ORDERED that the Applicant comply with Section 251(f)(1)(B) of the Telecommunications Act of 1996 and that the Applicant submit any bona fide request(s) for interconnection, services or network elements from a rural telephone company to the Commission for its approval prior to the provision of any service under the certification in a rural telephone company area.

IT IS FURTHER ORDERED that Applicant is obligated to abide by the same laws, rules and regulations, both federal and state (including any laws, rules or regulations regarding universal service, restrictions on joint marketing and quality of service), applicable to any other interexchange and local exchange carriers, except obligations imposed on incumbent local exchange carriers pursuant to Section 251(c) of the Act.

IT IS FURTHER ORDERED that, to the extent Applicant provides access line service as referenced in the Telecommunications Relay System Act, Neb. Rev. Stat. §§ 86-301 through 315 (Relay Act) and defined in Neb. Admin. R. & Reg.

Printed with soy ink on recycled paper

Title 291, ch. 5 § 001.01B, the Applicant shall collect from its subscribers a surcharge (Relay Surcharge) pursuant to the relay act and the Commission's annual orders establishing the amount of the surcharge, and shall remit to the Commission the proceeds from the relay surcharge as provided by the relay act.

IT IS FURTHER ORDERED that the Applicant comply with all necessary statutes and Commission Rules and Regulations as they pertain to the Nebraska Universal Service Fund.

IT IS FURTHER ORDERED that Applicant, like all other certificated carriers, shall file, in accordance with the applicable statutes, on or before April 30 of each year, an annual report with the Commission consisting of: (a) a copy of any report filed with the Federal Communications Commission; (b) a copy of any annual report to stockholders; and (c) a copy of the latest Form 10-K filed with the Securities and Exchange Commission. If such reports are unavailable, Applicant shall file a balance sheet and income statement for the previous year of operation, and for the state of Nebraska on a combined interstate-intrastate basis, the investment in the telephone plant and equipment located within the state, accumulated depreciation thereon, operating revenues, operating expenses and taxes.

IT IS FURTHER ORDERED that within 30 days from the entry of this order that the Applicant file a tariff with the Commission as required by state statutes and the Commission's regulations.

IT IS FINALLY ORDERED that this order be, and hereby is, made the Commission's official Certificate of Public Convenience and Necessity to the Applicant to provide local and interexchange voice services within the state of Nebraska.

MADE AND ENTERED at Lincoln, Nebraska, this 23rd day of November, 2004.

NEBRASKA PUBLIC SERVICE COMMISSION

COMMISSIONERS CONCURRING:

Chairman

ATTEST:

Executive Director

//s// Frank E. Landis
//s// Gerald L. Vap

Printed with soy ink on recycled paper

RECEIVED
AUG - 5 2005
NEBRASKA PUBLIC SERVICE COMMISSION

BEFORE THE NEBRASKA PUBLIC SERVICE COMMISSION

IN RE:	)	
	)	
SPRINT COMMUNICATIONS COMPANY L.P. PETITION FOR ARBITRATION UNDER THE TELECOMMUNICATIONS ACT	)	**APPLICATION NO. C-3429**

RESPONSE OF SOUTHEAST NEBRASKA TELEPHONE COMPANY TO SPRINT COMMUNICATIONS COMPANY L.P. MOTION IN LIMINE

INTRODUCTION

On July 28, 2005, Sprint Communications Company L.P. ("Sprint") filed a Motion in Limine in this matter (the "Motion"). In the Motion, Sprint seeks to exclude from receipt in evidence at the hearing of this matter certain exhibits, testimony, discovery responses, and other documents identified in Southeast Nebraska Telephone Company's ("SENTCO") Exhibit Designations. Such Designations were filed with the Commission on July 25, 2005 in accordance with the Planning Conference Order entered herein by the Hearing Officer. This Response will address each of Sprint's requests for exclusion of exhibits or other information from the record to be established at the hearing of this matter scheduled for August 10, 2005.

The evidence to which Sprint has objected is critical to creation of a full and complete record to facilitate the Commission's resolution of the issues presented in this case. All of the Exhibits that SENTCO has designated to be offered in evidence at the hearing of this matter, subject to the withdrawal of certain Exhibits as described below, have significant probative value. Moreover, taken as a whole, the evidence contained in the Exhibits raises significant questions regarding the veracity of Sprint's representation of the purported facts in this proceeding as set forth in the Pre-filed Direct Testimony of James R. Burt. Sprint should not be permitted to exclude such Exhibits from receipt into the record in this case, and thereby avoid

reconciliation of Mr. Burt's statements with the facts upon which the Commission has previously relied in making findings that directly bear upon the issues raised in this proceeding. Such a result would offend traditional notions of full and complete development of the record before the Commission, certainly a fundamental principle that undergirds the integrity of the Commission's decision-making process. Thus, SENTCO submits that, based on the supporting legal precedents provided below, as well as in the interest of developing a complete record in this proceeding, the evidence contained in the Exhibits as described below is and should be admissible in this proceeding.

Finally, in light of an August 1, 2005 communication from Commission Staff Attorney, Shana Knutson, SENTCO understands that the Hearing Officer desires to dispose of the Motion based on the arguments presented by Sprint in the Motion and this Response to such arguments. SENTCO wishes to advise that if oral argument would be of assistance to the Hearing Officer in resolving any issues presented by the Motion, SENTCO stands ready to present oral argument in support of its positions.

ANALYSIS OF SPRINT'S REQUESTS TO EXCLUDE EVIDENCE

A. Applicable Standard for Admissibility of Evidence

Since Sprint has provided the Commission with not one single statute, rule or case citation to support the positions set forth in the Motion, SENTCO submits that a proper analysis of the positions set forth in the Motion must begin with a review of the applicable law. The evidentiary standard applicable to the Commission's receipt of evidence at the hearing of this matter is set forth in *Neb. Rev. Stat.* § 84-914(1) (Reissue 1999) (the Nebraska Administrative Procedure Act or "NAPA"): "An agency may admit and give probative effect to evidence which possesses probative value commonly accepted by reasonably prudent persons in the conduct of

their affairs and exclude incompetent, irrelevant, immaterial, and unduly repetitious evidence." SENTCO submits that subject to the withdrawal of certain Exhibit Designations as described below, even a cursory review of the documents identified in the Exhibit Designations reflects that all of such exhibits meet the standard for admissibility established by the Nebraska Administrative Procedures Act.

In addition, Rule 016.01 of the Rules of Commission Procedure sets forth the general standard for receipt of evidence in Commission hearings. Such Rule provides:

> While the Commission will not be bound to follow the technical rules of evidence, the record will be supported by evidence which possesses probative value commonly accepted by reasonable men in the conduct of their affairs.

The NAPA and the Commission's Rule clearly establish the standard for admissibility of evidence at the hearing.

B. The Issue of Confidential Information Subject to Protective Orders in Applications No. C-3204 and C-3228

Sprint's objections to SENTCO's Exhibit Designations relating to Applications No. C-3204 and C-3228 that contain materials designated as confidential in such proceedings is a non-issue. The designated exhibits that contain confidential information are: Exhibit 7 – Sprint's Confidential Responses to Intervenors' Data Requests, Application No. C-3204; and Exhibit 13 – Time Warner Cable Information Services, LLC d/b/a Time Warner Cable's ("Time Warner") Responses and Objections to Data Requests, Application No. C-3228.

First, SENTCO respectfully notes that its Exhibit Designations were just that – an identification of exhibits as required by the Planning Conference Order entered herein. No copies of any confidential materials were served upon or disclosed in connection with such designation. The reference in the Motion to "civil contempt" (Motion at page 6) is wholly without basis, and can only be regarded as an attempt by Sprint to introduce an irrelevant

concept to the Hearing Officer's consideration of the Motion. Accordingly, for the reasons stated below, SENTCO requests that the Hearing Officer reject Sprint's contentions in Section II.D of the Motion.

Second, with regard to Exhibit 13, only a network diagram attached to such Responses (and received in evidence at the hearing of C-3228 as Exhibit 8) was designated by Time Warner as confidential. SENTCO does NOT intend to introduce such network diagram into evidence in this case or to make any references thereto.

Third, and with regard to Exhibit 7, the only confidential portion of such Exhibit that SENTCO intends to introduce into evidence in this matter is Sprint's Response to Data Request No. 5. This Response contains a verbal and schematic explanation of the network architecture that Sprint and Time Warner represented to the Commission that they intend to utilize to support Time Warner's voice customers. Sprint's objections to the introduction of Exhibit 7 into evidence should be rejected. The Protective Order entered in Application No. C-3204 (a copy of which is attached to the Motion as Exhibit C) and the Protective Order entered herein are substantially the same. Moreover, SENTCO, its consultant and attorneys have executed the Non-Disclosure Agreement in this case, and SENTCO and its local counsel also executed the C-3204 Non-Disclosure Agreement. Thus, the affected parties regarding Exhibit 7 are solely the two parties to this arbitration. No other parties are involved in this case and no risk is present that SENTCO's desire to introduce Sprint's response to Data Request No. 5 herein would disclose confidential information to the parties to this case and their representatives who have not signed Non-Disclosure Agreements.

Finally, the information contained in such response to Data Request No. 5 impeaches the Direct Testimony of Sprint's witness, Mr. Burt, and constitutes an admission against interest by

Sprint. Even if the Rules of Evidence applied to this matter, such information would be admissible as admissions against interest by a party-opponent. *See, Neb. Rev. Stat.* § 27-801.

SENTCO respectfully submits that the "Protective Order Issue" is, in reality, a non-issue with regard to the Hearing Officer's ruling on the Motion. Thus, SENTCO requests that the Hearing Officer reject the arguments presented in Section II. D of the Motion.

C. SENTCO's Response to Sprint's Objections to Individual Exhibit Designations

Set forth below is an enumeration of the SENTCO's Exhibit Designations to which Sprint has made additional, specific objections. Because SENTCO has concluded that it will withdraw its designations of Exhibits 9, 11, 15 and 17, these aspects of the Motion are moot. With respect to Sprint's other contentions, the evidence contained in all of SENTCO's remaining Exhibit Designations is admissible pursuant to the standards governing receipt of evidence at Commission hearings as set forth in Section 84-914(1) and Rule 016.01 (quoted above). Furthermore, even if the Nebraska Rules of Evidence applied to this matter, as demonstrated below, such evidence is also admissible. Therefore, the Motion should be denied as to each of the Exhibits identified below for which SENTCO has not withdrawn its designation.

1. Exhibit No. 3

Presumably, Sprint has objected to Exhibit No. 3 – Direct Testimony of Elizabeth A. Sickel, with attachment, filed July 25, 2005 – because it was inadvertently identified as relating to Application No. C-3204. Of course, this reference is to Ms. Sickel's prepared testimony served upon Sprint contemporaneously with the Exhibit Designation. It should have been labeled "Application No. C-3429." With this clarification, SENTCO assumes that Sprint's objection is resolved since none of the arguments advanced by Sprint would otherwise apply this

Exhibit. SENTCO notes that Sprint made no separate designation of Mr. Burt's Pre-filed Testimony as an exhibit in this matter.

2. Exhibit No. 5

Exhibit No. 5 is Sprint's Amended Application filed with the Commission in Application No. C-3204. This Exhibit, and indeed all of the Exhibit Designations related to Application No. C-3204, are admissible in evidence because: (1) the Commission may take "official" or "judicial notice" of these records under *Neb. Rev. Stat.* § 84-914(5) and *Neb. Rev. Stat.* § 27-201; (2) even if the Application No. C-3204 documents constitute hearsay, such documents are admissible under *Neb. Rev. Stat.* § 27-803(7), the public records exception; and (3) such documents contain admissions by a party-opponent, Sprint, which are not hearsay pursuant to *Neb. Rev. Stat.* § 27-801. SENTCO will expand upon these legal bases for admissibility below and will refer back to this discussion in connection with the analysis of admissibility of other Exhibits addressed below.

Official notice "permits an agency to dispense with the conventional process of proof...when the matter in question is some document or record that is in the agency's files." Schwartz, Administrative Law § 7.16 (3d ed. 1991). Neb. Rev. Stat. 84-914(5) allows an agency such as the Commission to take administrative notice of certain facts within its knowledge:

> An agency may take official notice of cognizable facts and in addition may take official notice of general, technical, or scientific facts within its specialized knowledge and the rules and regulations adopted and promulgated by such agency. Parties shall be notified either before or during the hearing or by reference in preliminary reports or otherwise of material so noticed. Parties shall be afforded an opportunity to contest facts so noticed. The record shall contain a written record of everything officially noticed. An agency may utilize its experience, technical competence, and specialized knowledge in the evaluation of the evidence presented to it.

According to M. Graham, Handbook of Federal Evidence § 201.3 at 72-73 (2d ed. 1986) and cited with approval in *Gottsch v. Bank of Stapleton*, 235 Neb. 816, 834 (1990):

> A court will take judicial notice of its own acts and records in the same case, of facts established in prior proceedings in the same case, of the authenticity of its own records of another case between the same parties, of the files of related cases in the same court, and of public records on file in the same court. In addition judicial notice will be taken of the record, pleadings or judgment of a case in another court between the same parties or involving one of the same parties, as well as the record of another case between different parties in the same court.

As expressed in McCormick on Evidence § 330 at 927 (E. Cleary 3d ed. 1984) and again cited with approval in *Gottsch*:

> It would seem obvious that the judge of a court would take notice of all of the records of the institution over which he presides, but the courts have been slow to give the principle of judicial notice its full reach of logic and expediency. It is settled, of course, that the courts, trial and appellate, take notice of their own respective records in the present litigation, both as to matters occurring in the immediate trial, and in previous trials or hearings. The principle seemingly is equally applicable to matters of record in the proceedings in other cases in the same court, and some decisions have recognized this . . .

Id. Since the judicial notice rule applies to courts, it is a given that such rule is equally applicable to administrative agencies. Thus, on this basis alone, admission of Exhibit No. 5 is justified.

Independently, however, Nebraska law also allows an agency to take judicial notice of facts contained within a record where the record is available for inspection and the party had an opportunity to object. *ATS Mobile Tel. v. Northwestern Bell Tel.*, 213 Neb. 403 (1983).

Moreover, the Nebraska rules of evidence provide that the existence of court records and certain judicial action reflected in a court's records are an appropriate subject for judicial notice. Neb. Rev. Stat. § 27-201; *Gottsch, supra.* In *State v. Dandridge,* 255 Neb. 364 (1998), the Nebraska Supreme Court stated:

> The existence of court records and certain judicial acts reflected in a court's record are in accordance with § 27-201(2)(b)--facts which are capable of accurate and ready determination by resort to sources whose accuracy cannot reasonably be questioned. A court may, therefore, judicially notice the existence of its records and the records of another court.

Id. at 370; *see* also *State v. Billups*, 263 Neb. 511 (2002) (existence of court records and certain judicial acts reflected in court's record are in accordance with Neb. Rev. Stat. § 27-201).

Sprint's arguments set forth in Sections II.A through II.C of the Motion do not overcome the foregoing legal authorities. (It should be noted that in the entire Motion, Sprint does not cite *even one statute, rule or case* in support of its arguments.) Sprint was a party to Application No. C-3204; the fact that Application No. C-3204 was a certification case rather than a case under 47 U.S.C. § 252(e) has no bearing on the proper receipt of this information in evidence given the nature and extent of the party-opponent admissions contained in Exhibit No. 5; and SENTCO does not seek to "import the entire administrative record in Application No. C-3204." Accordingly, SENTCO submits that Sprint's Motion should be denied as it relates to Exhibit No. 5.[1]

3. Exhibit No. 6

Exhibit No. 6 is Sprint's Responses to Interveners' Data Requests dated September 21, 2004 in Application No. C-3204. There are no confidential materials included in this Exhibit. SENTCO advises Sprint and the Hearing Officer that it is Sprint's responses to Requests 2, 5 and 6 that are of primary interest in connection with the intended introduction of this Exhibit in evidence in this matter.

---

[1] Although Sprint has not objected to Exhibit No. 5 as inadmissible hearsay, the Exhibit is admissible under the public records exception of the hearsay rule, *Neb. Rev. Stat.* § 27-803(7). Since the certified copy of a public record itself is admissible in evidence, there is generally no practical necessity for official/judicial notice (see discussion *supra*). *See Chandler v. Roudebush*, 425 U.S. 840 (1976) (prior administrative findings made with respect to an employment discrimination claim may be admitted under Rule 803).

For all of the reasons set forth above in support of the admissibility of Exhibit No. 5, the Hearing Officer should deny the Motion as it relates to Exhibit No. 6.

4. Exhibit No. 7

Exhibit No. 7 is Sprint's Confidential Responses to Intervenors' Data Requests dated September 21, 2004 in Application No. C-3204, received in evidence as Exhibit 7 at the hearing on such Application. SENTCO advises Sprint and the Hearing Officer that it is Sprint's Response to Request No. 5 contained in this Exhibit that is of primary interest in connection with the intended introduction of this Exhibit into evidence in this matter. As explained in Section B above and in SENTCO's arguments for the admissibility of Exhibit No. 5, this Exhibit No. 7 should be received in evidence in this matter. Any confidential aspect of this Exhibit will be protected from disclosure in accordance with the terms of the Protective Order entered in this case.

For all of the reasons set forth above, the Hearing Officer should deny the Motion as it relates to Exhibit No. 7.

5. Exhibit No. 8

Exhibit No. 8 is the Pre-filed Testimony of James R. Burt dated October 1, 2004, filed in Application No. C-3204, received in evidence as Exhibit 4 at the hearing on such Application. There are no confidential materials included in this Exhibit. SENTCO advises Sprint and the Hearing Officer that page 7, lines 8-22 of Mr. Burt's testimony is of primary interest to be introduced in evidence in this matter. This testimony constitutes an admission of a party-opponent. Further, this excerpt impeaches portions of Mr. Burt's Pre-filed Direct Testimony filed in this matter.

For all of the reasons set forth above, the Hearing Officer should deny the Motion as it relates to Exhibit No. 8.

6. Exhibit No. 9

SENTCO withdraws its designation of Exhibit No. 9 which is the Pre-filed Testimony of Dr. Brian K. Staihr introduced in Application No. C-3204.

7. Exhibit No. 10

Exhibit No. 10 is the official Commission transcript of the oral testimony presented at the hearing in Application No. C-3204. Although confidential exhibits are referred to by number in this Exhibit, there are no confidential materials included in this Exhibit.

An agency may take official notice of, and therefore consider, a transcript that is a matter of public record. *Locicero v. Leslie*, 948 F.Supp. 10, 12 (D.Mass. 1996) (considering transcript of prior proceeding in context of Rule 12(b)(6) motion); see also *Zdrok v. V Secret Catalogue, Inc.*, 215 F.Supp. 2d 510, 513-14 (D.N.J. 2002).

Moreover, the transcript of Application No. C-3204, which insofar as relevant to this proceeding consists of sworn testimony, is trustworthy and was developed through a process during which Sprint was afforded an opportunity to be heard and to cross examine. Hence, admission of this Exhibit does not run afoul of the hearsay rule (which in any event is not applicable under the evidentiary standard of Section 84-914(1)).

For all of the reasons set forth above, the Hearing Officer should deny the Motion as it relates to Exhibit No. 10.

8. Exhibit No. 11

SENTCO withdraws its designation of this Exhibit which is the Post-Hearing Comments of Sprint in Application No. C-3204.

9. Exhibit No. 12

Exhibit No. 12, and indeed the remaining exhibits to which Sprint objects in the Motion, relate to Application No. C-3228. Exhibit No. 12, as well as Exhibits 13, 14 and 16 (SENTCO is withdrawing the designation of Exhibits 15 and 17 as described below) are admissible because: (1) The Commission may take "official" and "administrative notice" of the record in Application No. C-3228 pursuant to *Neb. Rev. Stat.* § 84-914(5) and *Neb. Rev. Stat.* § 27-201; and (2) even if the records in Application No. C-3228 adjudication constitute hearsay (which again is not applicable under the evidentiary standard of Section 84-914(1)), all designated exhibits relating to Application No. C-3228 are admissible under the public records exception to the hearsay rule (Section 27-803(7)). (In order to avoid repetition, SENTCO refers the Hearing Officer to the discussion at pages 6 through 8 above concerning these legal arguments.)[2] In addition, the Commission may take judicial notice of prior proceedings even though the parties to the prior proceeding are different. *Opoka v. I.N.S.*, 94 F.3d 392, 394 (7th 1996).

For all of the reasons set forth above, the Hearing Officer should deny the Motion as it relates to Exhibit No. 12.

10. Exhibit No. 13

---

[2] Any concerns of the Commission regarding the application of *ATS* to the records in Application No. C-3228 as expressed in the Commission's ruling on Sprint's Motion in Limine in Application No. C-3204 are now moot. In sustaining Sprint's Motion in C-3204 to exclude the record in Application No. C-3228, the Hearing Officer stated:

> Southeast relied upon *In re Application of ATS Mobile Tel.*, 213 Neb. 403 (1983) in support of its position. That case is distinguishable from the present situation as it involved taking administrative notice of a previous Commission grant of an application and the services provided based upon that grant. The prior application and all underlying facts had already been resolved and nothing remained in dispute. That is not the case with respect to C-3228. No order has been issued and the facts in that case remain in dispute.
>
> Therefore, Sprint's motion in limine is granted . . .

Importantly, on November 23, 2004 (after the above ruling was made) an order was entered in Application C-3228. The final resolution of Application No. C-3228 vitiates any concern in applying *ATS* analysis to the admissibility of records relating to C-3228 in the instant case. Therefore, the principles set forth in *ATS* control.

Exhibit No. 13 is Time Warner's Responses and Objections to Data Requests of Commission Staff and Interveners dated September 1, 2004 in Application No. C-3228, received in evidence as Exhibit 5 at the hearing on such Application. There are no confidential materials included in this Exhibit with the exception of an attached network diagram. SENTCO advises Sprint and the Hearing Officer that it is Time Warner's Responses to Requests 2 and 5 that are of primary interest in connection with the intended introduction of this Exhibit in evidence in this matter. As stated in Section B above, SENTCO does NOT intend to introduce such network diagram into evidence in this case or to make any references thereto.

For all of the reasons set forth above, the Hearing Officer should deny the Motion as it relates to Exhibit No. 13.

11. Exhibit No. 14

Exhibit No. 14 is the Pre-filed Testimony of Julie Y. Patterson dated September 1, 2004 and filed in Application No. C-3228, received in evidence as Exhibit 3 at the hearing on such Application. There are no confidential materials included in this Exhibit. SENTCO advises Sprint and the Hearing Officer that pages 5-7 of Ms. Patterson's testimony are of primary interest to be introduced in evidence in this matter. This portion of Exhibit No. 14 has "probative value commonly accepted by reasonably prudent persons in the conduct of their affairs." (Section 84-914(1)) Ms. Patterson's sworn testimony contradicts and thus impeaches portions of the Pre-filed Direct Testimony of Mr. Burt. Independently, such testimony is admissible as it is a part of the Commission's records, having been accepted into evidence in Application No. C-3228, and thus, is entitled to administrative notice for the reasons discussed at pages 6 through 8 above.

Moreover, even if the testimony is hearsay, a statement against the interest of a party is an exception to the hearsay rule, and therefore admissible. *Neb. Rev. Stat.* § 27-804. The

exception reaches statements by which the speaker concedes a contractual or other obligation to another. *See Martin v. Turner*, 218 S.E2d 789, 791 (Ga. 1975) (in suit on oral contract, statements by decedent that he made agreement with plaintiff fit exception). In the case of *State ex rel. Am. Tel. & Tel. Co. v. Pub. Serv. Comm'n,* 701 S.W.2d 745 (Mo.App. W.D.1985), the court held that testimony in a prior hearing before the Missouri Public Service Commission relating to the nature of a contractual arrangement was properly admissible in a subsequent hearing before that Commission. In determining that the testimony was admissible, the court stated:

> The Commission, however, because of its unique nature does not have to apply the technical rules of evidence "with the same force and vigor as in an action brought in a court of law."

Id. at 755.

For all of the reasons set forth above, the Hearing Officer should deny the Motion as it relates to Exhibit No. 14.

12. Exhibit No. 15

SENTCO withdraws its designation of this Exhibit which is the Pre-filed Testimony of Steven E. Watkins filed in Application No. C-3228.

13. Exhibit No. 16

Exhibit No. 16 is the Transcript of the sworn testimony provided at the public hearing of Application No. C-3228 on September 17, 2004. There are no confidential materials included in this Exhibit. SENTCO advises Sprint and the Hearing Officer that the portions of this Transcript that are of primary, but not exclusive, interest are those pages of this Exhibit attached to the Pre-filed Rebuttal Testimony of Steven E. Watkins filed herein on August 3, 2005. As with Ms. Patterson's Pre-filed Direct Testimony, the Transcript of the C-3228 hearing has "probative

value commonly accepted by reasonably prudent persons in the conduct of their affairs" (Section 84-914(1)) by reason of the fact that portions of the sworn testimony set forth in the Transcript contradicts and thus impeaches portions of the Pre-filed Direct Testimony of Mr. Burt. Obviously, such testimony is a part of the Commission's records, and thus, is entitled to administrative notice for the reasons discussed at pages 6 through 8 above.

For all of the reasons set forth above, the Hearing Officer should deny the Motion as it relates to Exhibit No. 16.

14. Exhibit No. 17

SENTCO withdraws its designation of this Exhibit which is the Post-Hearing Brief of Time Warner filed in Application No. C-3228.

CONCLUSION

For the reasons set forth herein, SENTCO respectfully requests that the Hearing Officer enter his Order denying the Motion as it relates to Exhibits 3, 5-8, 10, 12-14, and 16 identified in SENTCO's Exhibit Designations dated July 25, 2005. SENTCO withdraws its designations of Exhibits 9, 11, 15 and 17.

Dated: August 5, 2005.

SOUTHEAST NEBRASKA TELEPHONE COMPANY

By: Paul M. Schudel

Paul M. Schudel, No. 13723
James A. Overcash, No. 18627
WOODS & AITKEN LLP
301 South 13th St, Ste 500
Lincoln, NE 68508
(402) 437-8500

and

Thomas J. Moorman, D.C. Bar No. 384790
KRASKIN, MOORMAN & COSSON, LLC
2120 L Street, N.W., Suite 520
Washington, D.C. 20037
(202) 296-8890
Its Attorneys

CERTIFICATE OF SERVICE

I hereby certify that true and correct copies of the foregoing **RESPONSE TO MOTION IN LIMINE** were sent by First-Class U.S. Mail and electronic mail on August 5, 2005, to the following:

Diane C. Browning
6450 Sprint Parkway,
Mailstop KSOPHN0212-2A511
Overland Park, KS 66251

Shana Knutson
Nebraska Public Service Commission
300 The Atrium
1200 N Street
Lincoln, NE 68508

Paul M. Schudel

Paul M. Schudel

0241

ATTACHMENT A

BEFORE THE NEBRASKA PUBLIC SERVICE COMMISSION

IN RE:	)	
SPRINT COMMUNICATIONS	)	
COMPANY L.P. PETITION FOR	)	APPLICATION NO. C-3429
ARBITRATION UNDER THE	)	
TELECOMMUNICATIONS ACT	)	

SOUTHEAST NEBRASKA TELEPHONE COMPANY'S EXHIBIT DESIGNATIONS

Southeast Nebraska Telephone Company ("SENTCO") hereby identifies and designates the following exhibits in accordance with the Planning Conference Order entered herein by the Hearing Officer on June 28, 2005:

#	Description	Offered	Accepted
1	Petition for Arbitration, Application No. C-3429, May 23, 2005, filed by Sprint Communications Company L.P. ("Sprint")		
2	Motion to Dismiss or, in the Alternative, Response of Southeast Nebraska Telephone Company to Petition for Arbitration, Application No. C-3429, filed June 17, 2005 by Southeast Nebraska Telephone Company ("SENTCO")		
3	Direct Testimony of Elizabeth A. Sickel, Application C-3429, filed July 25, 2005, with attachment		
4	Correspondence from Monica Barone to Paul Schudel dated January 5, 2005 and correspondence from Paul Schudel to Monica Barone dated January 12, 2005, both with attachments		
5	Sprint's Amended Application for Statewide CLEC Authority, Application No. C-3204, filed with the Nebraska Public Service Commission and dated July 16, 2004		
6	Sprint's Responses to Intervenors' Data Requests, Application No. C-3204, dated September 21, 2004.		
7	Sprint's Confidential Responses to Intervenors' Data Requests, Application No. C-3204, dated September 21, 2004, including Supplements and including Wholesale Voice Services Agreement between Time Warner Cable Inc. and Sprint Communications Company, L.P. dated December 5, 2003		
8	Pre-filed Testimony of James R. Burt, Application No. C-3204, dated October 1, 2004		
9	Pre-filed Testimony of Dr. Brian K. Staihr, Application No. C-3204, dated October 1, 2004		

SOUTHEAST NEBRASKA TELEPHONE COMPANY

By: _____

Paul M. Schudel, No. 13723
James A. Overcash, No. 18627
WOODS & AITKEN LLP
301 South 13th St, Ste 500
Lincoln, NE 68508
(402) 437-8500

and

Thomas J. Moorman, D.C. Bar No. 384790
KRASKIN, MOORMAN & COSSON, LLC
2120 L Street, N.W., Suite 520
Washington, D.C. 20037
(202) 296-8890
Its Attorneys

CERTIFICATE OF SERVICE

I hereby certify that true and correct copies of the foregoing **SOUTHEAST NEBRASKA TELEPHONE COMPANY'S** were sent by First-Class U.S. Mail and electronic mail on July 25, 2005, to the following:

Diane C. Browning
6450 Sprint Parkway,
Mailstop KSOPHN0212-2A511
Overland Park, KS 66251

Shana Knutson
Nebraska Public Service Commission
300 The Atrium
1200 N Street
Lincoln, NE 68508

_____
Paul M. Schudel

0243

BEFORE THE NEBRASKA PUBLIC SERVICE COMMISSION

REBUTTAL TESTIMONY

OF

JAMES R. BURT

Application No. C-3429

August 3, 2005

0244

RECEIVED
AUG - 5 2005
NPSC-Comm. Dept.

1 **Q. Please state your name.**

2 A. My name is James R. Burt.

3

4 **Q. Are you the same James R. Burt that submitted direct testimony in this**

5 **arbitration proceeding identified as Application No. C-3429?**

6 A. Yes.

7

8 **Q. Mr. Burt, can you please summarize the purpose of this testimony?**

9 A. Yes. In this rebuttal testimony, I will respond to five specific points addressed in

10 the direct testimony of Southeast Nebraska Telephone Company ("SENTCO")

11 witness Elizabeth Sickel (hereinafter, the "Sickel Testimony") that require a reply

12 from Sprint. Although the Sickel Testimony would permit me opportunities to

13 reiterate and restate the key points of my direct testimony, in the interest of not

14 burdening the Commission, I have refrained from doing so. Instead, I have

15 limited my rebuttal testimony to specific points in the Sickel Testimony. The

16 absence of reiteration or re-argument does not mean that Sprint concedes any of

17 SENTCO's characterization of the issues or facts in this proceeding.

18

19 **Q. On page 4 Ms. Sickel emphasizes the term "enabler" to characterize Sprint's**

20 **services. In your opinion, does SENTCO's emphasis on the term "enabler"**

21 **impact Sprint's right to interconnection with SENTCO?**

22 A. No, it does not. The term "enabler" is not a term defined in the

23 Telecommunications Act of 1996 ("the Act"). Regardless of the term that is

24 chosen to describe Sprint's proposed services, Sprint and its proposed services fit
25 the definitions of telecommunications carrier and telecommunications services in
26 Sections 153(44) and 153(47), respectively, of the Act. Sprint intends to provide
27 telecommunications services in its capacity as a telecommunications carrier. By
28 emphasizing the term "enabler," SENTCO is attempting to denigrate the true
29 competitive nature of the telecommunications services that Sprint and Time
30 Warner Cable ("TWC") intend to provide to rural subscribers in Nebraska. The
31 essence of SENTCO's position is that Sprint must be a carrier providing billing,
32 customer care, and installation to subscribers before SENTCO can be required to
33 interconnect with Sprint under the Act. As I have explained, there is no such
34 requirement in the Act, as many state commissions such as those in Ohio, Illinois
35 and New York have already recognized. SENTCO's emphasis of the term
36 "enabler" does not change the true nature of the telecommunications services that
37 Sprint will provide, including the interconnection services that it intends to make
38 available to all within the class similarly situated to TWC, so that the services are
39 effectively being offered to the public. As set forth more fully in my direct
40 testimony, Sprint and TWC will each provide network elements, expertise,
41 resources, capabilities, assets and market position to permit rural subscribers in
42 SENTCO's territories to have a meaningful choice for their local
43 telecommunications services, as an alternative to SENTCO.
44

45 **Q. On page 5 Ms. Sickel characterizes the proposed interconnection agreement**
46 **(ICA) as being "for the benefit of a third party carrier that is not a party to**
47 **such ICA". Do you agree with this characterization?**
48 **A.** No. Sprint is not seeking interconnection with SENTCO for the benefit of TWC.
49 Sprint seeks interconnection with SENTCO because Sprint is a
50 telecommunications carrier proposing to provide telecommunications services as
51 defined in the Act, and therefore Sprint is entitled to interconnection in its own
52 right. Neither Sprint nor TWC is the agent of the other party for purposes of the
53 proposed interconnection agreement. Rather, Sprint has chosen to combine and
54 leverage resources, capabilities, expertise, assets and market position with other
55 competitive service providers (in this case TWC) to bring facilities-based
56 competitive voice services to consumers in Nebraska. Sprint's business model
57 capitalizes on the resources and capabilities of both companies to allow for
58 market entry far sooner than if either TWC or Sprint were to attempt to enter the
59 market alone. Sprint and TWC each bring different resources to the relationship
60 that, when combined, will allow consumers in SENTCO's territories to have
61 access to competitive local voice service.
62
63 **Q. On page 8 Ms. Sickel characterizes Sprint's arrangement with TWC as a**
64 **"private contract." Do you agree with this characterization?**
65 **A.** No. Sprint intends to offer its interconnection services, including those services
66 previously listed, to all persons or entities within a class similarly situated to
67 TWC so that the proposed services are effectively available to the public. This

68 means that Sprint intends to provide the interconnection services to all entities
69 who desire to take them and who have comparable "last mile" facilities to the
70 entities like TWC in SENTCO territory. As I stated in my direct testimony, if the
71 Commission requires it, Sprint is willing to file a tariff for these interconnection
72 services. In addition, contrary to the implication created by SENTCO's use of the
73 term "private" contract, the proposed services are not private services offered only
74 to a few select business, but rather will be available to all customers in the
75 SENTCO serving territory who wish to purchase them.
76
77 **Q. On page 9 Ms. Sickel testifies that "the end users that originate the traffic**
78 **that Sprint seeks to exchange with SENTCO under the ICA will be TWC's**
79 **end users," and "only TWC will have the end user relationship not Sprint."**
80 **In your opinion, does this affect Sprint's right to interconnection with**
81 **SENTCO?**
82 **A.** No. As Sprint's discovery responses adequately disclose, it is true that TWC
83 intends to perform the billing, customer service, and installation functions for the
84 competitive voice services, while Sprint will provide other services such as
85 switching; public switched telephone network ("PSTN") interconnectivity,
86 including all inter-carrier compensation; numbering resources, administration and
87 porting; domestic and international toll service; operator and directory assistance
88 and numerous back-office functions. However, contrary to the implication
89 suggested by SENTCO, there is no requirement under the Act that an entity
90 provide billing and customer service functions to the subscribers of the services in

91 order for that entity to be entitled to interconnection and reciprocal compensation.
92 Ms. Sickel points to no such provision. Sprint is a telecommunications carrier
93 providing telecommunications services under the Act. As such, Sprint is entitled
94 to interconnection with SENTCO.
95
96 **Q. Does Ms. Sickel's testimony on page 9, which is addressed above, refute**
97 **Sprint's position that it will be entitled to reciprocal compensation under its**
98 **proposed interconnection agreement with SENTCO?**
99 **A.** No. The basis for reciprocal compensation does not depend on who is actually
100 serving an end user. It is based on the usage of a carrier's network. Sprint owns
101 the Class 5 switch that will switch residential subscribers' voice calls. Sprint's
102 switch will perform all switching and routing functions for local, domestic and
103 foreign toll, emergency, operator assisted, directory assistance calls.
104
105 It is important to underscore that every call passing between the PSTN and the
106 customers of the service being provided under this business model will pass
107 through Sprint's switch. The Sprint Class 5 switch is the relevant piece of
108 telecommunications equipment that connects end users to the PSTN. Without it,
109 proposed subscribers could not make or receive voice telecommunications calls.
110 This switch is identified in the Local Exchange Routing Guide ("LERG") and is
111 identified by a Common Language Location Identifier ("CLLI") code. The Local
112 Routing Number associated with the telephone numbers assigned to the customers
113 directs calls to Sprint's switch. The Point Codes used for SS7 signaling identify

114 Sprint's switch. Sprint is the entity whose switch is performing every function
115 associated with the telecommunications services being provided.
116
117 Because Sprint's network facilities are the relevant telecommunications facilities
118 being accessed to originate and terminate voice telephone traffic on the PSTN, the
119 usage of its network is a proper subject for reciprocal compensation (as is the
120 network of the other LEC involved, i.e., SENTCO).
121
122 In addition, it should be noted that under the proposed ICA, SENTCO would also
123 pay and receive payment for traffic exchanged between Sprint and SENTCO.
124
125 **Q. Does this conclude your rebuttal testimony?**
126 A. Yes it does.

CERTIFICATE OF SERVICE

The undersigned hereby certifies that the foregoing was served by electronic mail and U.S. mail, postage prepaid to the following on the 3rd day of August, 2005:

Shana Knutson
Nebraska Public Service Commission
1200 N St. 300 The Atrium
Lincoln, NE 68508

Paul M. Schudel
Woods & Aiken LLP
301 S 13th St Ste 500
Lincoln NE 68508

James A. Overcash
Woods & Aitken LLP
301 S 13th St Ste 500
Lincoln, NE 68508

Diane C. Browning

Nebraska Public Service Commission

COMMISSIONERS:
ANNE C. BOYLE
WELL C. JOHNSON
D JOHNSON
FRANK E. LANDIS
GERALD L. VAP

EXECUTIVE DIRECTOR:
ANDY S. POLLOCK

300 The Atrium, 1200 N Street, Lincoln, NE 68508
Post Office Box 94927, Lincoln, NE 68509-4927
Website: www.psc.state.ne.us
Phone: (402) 471-3101
Fax: (402) 471-0254

NEBRASKA CONSUMER HOTLINE:
1-800-526-0017

August 8, 2005

CERTIFICATION

To Whom It May Concern:

I, Andy S. Pollock, Executive Director of the Nebraska Public Service Commission, hereby certify that the enclosed is a true and correct copy of the original order made and entered in C-3429 on the 5th day of August 2005. The original order is filed and recorded in the official records of the Commission.

IN TESTIMONY WHEREOF, I have hereunto set my hand and affixed the Seal of the Nebraska Public Service Commission, Lincoln, Nebraska, this 8th day of August 2005.

Sincerely,

Andy S. Pollock
Executive Director

ASP:dk

Enclosure

cc: Diane C. Browning, 6450 Sprint Parkway, Mailstop KSOPHN0212-2A511, Overland Park, KS 66251
Bradford E. Kistler, Kinsey Ridenouer Becker & Kistler, LLP, 601 Lincoln Square, 121 S. 13th St., Lincoln, NE 68501
Elizabeth A. Sickel, Southeast Nebraska Telephone Co., 110 W. 17th St., Falls City, NE 68355
Paul M. Schudel, Woods & Aiken, LLP, 301 S. 13th St., Ste. 500, Lincoln, NE 68508
James Overcash, #18627, Woods & Aitken, LLP, 301 South 13th Street, Suite 500, Lincoln, NE 68508
Thomas J. Moorman, DC Bar No., 384790, KRASKIN, MOORMAN & COSSON, LLC, 2120 L Street, NW 520, Washington, DC 20037
REED SMITH LLP, Darren S. Weingard, Two Embarcadero Center, Ste. 2000, San Francisco, CA 94111
REED SMITH LLP, Raymond A. Cardozo, Two Embarcadero Center, Ste. 2000, San Francisco, CA 94111

Printed with soy ink on recycled paper

BEFORE THE NEBRASKA PUBLIC SERVICE COMMISSION

In the Matter of Sprint Communications Company L.P., Overland Park, Kansas, Petition for arbitration under the Telecommunications Act, of certain issues associated with the proposed interconnection agreement between Sprint and Southeast Nebraska Telephone Company, Falls City.	)	Application No. C-3429 HEARING OFFICER ORDER Entered: August 5, 2005

BY THE HEARING OFFICER:

O P I N I O N A N D F I N D I N G S

This matter comes before the Hearing Officer on a motion in limine filed by Sprint Communications Company L.P., (Sprint or Petitioner) Overland Park, Kansas, on July 29, 2005. Sprint's motion seeks to exclude certain discovery and documents identified by Southeast Nebraska Telephone Company (SENTCO). Specifically, Sprint requests an order excluding the items identified by SENTCO in Response to Sprint's Request for Production No. 1 and listed as Exhibit Nos. 3,5,6,7,8,9,10,11,12,13,14,15,16, and 17 of SENTCO's Exhibit Designations filed electronically on July 25, 2005. On August 5, 2005, SENTCO electronically filed its response to Sprint's motion in limine. In SENTCO's reply, the Designation of Exhibits 9, 11, 15 and 17 were withdrawn. Accordingly, with respect to those exhibits Sprint's motion in limine is moot. This Order addresses the remaining portions of Sprint's motion.

Upon consideration of the motion, the Hearing Officer finds the motion in limine should be denied with respect to exhibits 3, 5, 6, 8, 10, 12 and 16. With respect to the designation of exhibits 10, 12 and 16, the Hearing Officer finds that portions of these designated documents may be relevant in describing the business arrangement between Sprint and Time Warner and may be received at the hearing to the extent they are admissible for the purpose in which they are offered.

Sprint's motion should be granted with respect to exhibits 7, 13, and 14. The Hearing Officer does not agree that a violation of the protective order has occurred by SENTCO's Designation of Exhibit 7, but agrees with the argument forwarded by Sprint that the protective order issued in C-3204 would prohibit the use and disclosure of the confidential information provided in that proceeding in the matter before us. Further, SENTCO designated exhibits 13 and 14 for the purpose of

Printed with soy ink on recycled paper

impeachment. Although certain portions of the transcript for C-3228 which describe the business arrangement between Sprint and SENTCO may be admissible at the hearing, standing alone, the use of exhibits 13 and 14 for the impeachment of Mr. Burt who was not involved in C-3228 will not be permitted. Accordingly, the motion in limine is granted as it pertains to exhibits designated by SENTCO as 13 and 14.

O R D E R

IT IS THEREFORE ORDERED by the Hearing Officer that the motion in limine filed by Sprint is hereby granted in part and denied in part as provided herein.

MADE AND ENTERED at Lincoln, Nebraska this 5th day of August, 2005.

NEBRASKA PUBLIC SERVICE COMMISSION

By: Frank Landis Jr.
Hearing Officer

Printed with soy ink on recycled paper

Nebraska Public Service Commission

COMMISSIONERS:
ANNE C. BOYLE
NEVELL C. JOHNSON
JOD JOHNSON
FRANK E. LANDIS
GERALD L. VAP

EXECUTIVE DIRECTOR:
ANDY S. POLLOCK

300 The Atrium, 1200 N Street, Lincoln, NE 68508
Post Office Box 94927, Lincoln, NE 68509-4927
Website: www.psc.state.ne.us
Phone: (402) 471-3101
Fax: (402) 471-0254

NEBRASKA CONSUMER HOTLINE:
1-800-526-0017

August 9, 2005

CERTIFICATION

To Whom It May Concern:

I, Andy S. Pollock, Executive Director of the Nebraska Public Service Commission, hereby certify that the enclosed is a true and correct copy of the original order made and entered in C-3429 on the 9th day of August, 2005. The original order is filed and recorded in the official records of the Commission.

IN TESTIMONY WHEREOF, I have hereunto set my hand and affixed the Seal of the Nebraska Public Service Commission, Lincoln, Nebraska, this 9th day of August 2005.

Sincerely,

Andy S. Pollock
Executive Director

ASP:ab

Enclosure

cc: Diane C. Browning, 6450 Sprint Parkway, Mailstop KSOPHN0212-2A511, Overland Park, KS 66251
Bradford E. Kistler, Kinsey Ridenouer Becker & Kistler, LLP, 601 Lincoln Square, 121 S. 13th St., Lincoln, NE 68501
Elizabeth A. Sickel, Southeast Nebraska Telephone Co., 110 W. 17th St., Falls City, NE 68355
Paul M. Schudel, Woods & Aiken, LLP, 301 S. 13th St., Ste. 500, Lincoln, NE 68508
James Overcash, #18627, Woods & Aitken, LLP, 301 South 13th Street, Suite 500, Lincoln, NE 68508
Thomas J. Moorman, DC Bar No., 384790, KRASKIN, MOORMAN & COSSON, LLC, 2120 L Street, NW 520, Washington, DC 20037
REED SMITH LLP, Darren S. Weingard, Two Embarcadero Center, Ste. 2000, San Francisco, CA 94111
REED SMITH LLP, Raymond A. Cardozo, Two Embarcadero Center, Ste. 2000, San Francisco, CA 94111

Printed with soy ink on recycled paper

BEFORE THE NEBRASKA PUBLIC SERVICE COMMISSION

In the Matter of Sprint Communications Company L.P., Overland Park, Kansas, Petition for arbitration under the Telecommunications Act, of certain issues associated with the proposed interconnection agreement between Sprint and Southeast Nebraska Telephone Company, Falls City.	)	Application No. C-3429 HEARING OFFICER ORDER Entered: August 9, 2005

BY THE HEARING OFFICER:

O P I N I O N A N D F I N D I N G S

This matter comes before the Hearing Officer on a Motion to Strike filed by Sprint Communications Company L.P. (Sprint or Petitioner), Overland Park, Kansas, on August 8, 2005. Sprint's motion seeks to strike in whole or in part the Rebuttal Testimony of Mr. Watkins filed by Southeast Nebraska Telephone Company (SENTCO) on August 3, 2005. A response to that motion was filed by SENTCO on August 9, 2005.

Upon consideration of the motion, the Hearing Officer finds the motion to strike should be denied with respect to the Rebuttal Testimony of Mr. Watkins. The Commission will afford the testimony the weight that it merits and will consider Sprint's arguments in that analysis.

O R D E R

IT IS THEREFORE ORDERED by the Hearing Officer that the motion to strike filed by Sprint be and it is hereby denied.

MADE AND ENTERED at Lincoln, Nebraska this 9th day of August, 2005.

NEBRASKA PUBLIC SERVICE COMMISSION

By: _____
Hearing Officer

Printed with soy ink on recycled paper

RECEIVED
AUG - 9 2005
NEBRASKA PUBLIC SERVICE COMMISSION

BEFORE THE NEBRASKA PUBLIC SERVICE COMMISSION

IN RE:	)	
	)	
SPRINT COMMUNICATIONS COMPANY L.P. PETITION FOR ARBITRATION UNDER THE TELECOMMUNICATIONS ACT	)	**APPLICATION NO. C-3429**

RESPONSE OF SOUTHEAST NEBRASKA TELEPHONE COMPANY TO SPRINT COMMUNICATIONS COMPANY L.P. MOTION TO STRIKE

INTRODUCTION

On August 3, 2005, Southeast Nebraska Telephone Company ("SENTCO") filed the Rebuttal Testimony of Stephen E. Watkins in this case in accordance with the schedule and requirements established in the Planning Conference Order entered by the Hearing Officer on June 28, 2005. On August 8, 2005, Sprint Communications Company L.P. ("Sprint") filed a Motion to Strike such testimony (the "Motion"). For the reasons set forth below, the Motion is without factual or legal basis and should be denied by the Hearing Officer.

Setting aside the unnecessary invectives advanced by Sprint, the Motion lacks any legal substance. To a large degree, the Motion is an attempt to obtain a rehearing of the Hearing Officer's denial by Order dated August 5, 2005 of the majority of Sprint's arguments asserted in its Motion in Limine which sought to exclude from evidence most of the exhibits identified in SENTCO's Exhibit Designations dated July 25, 2005. SENTCO will address below each of Sprint's claims as they appear in the Motion, and thereby will demonstrate that the Motion should be denied.

RESPONSE TO SPRINT'S ARGUMENTS

A. Service of Copies of Exhibits Designated from Application No. C-3228

All documents relating to Application No. C-3228 that were included in the Exhibit Designations are a matter of public record in the files of the Commission. All such documents were and are available for inspection and copying by Sprint. This argument was raised in the Motion in Limine at pages 3-4. No prejudice to Sprint's interests has occurred. No prejudice to its interests is claimed by Sprint in the Motion. The Hearing Officer has ruled on the admissibility of the C-3228 exhibits in his August 5 Order. Sprint's claims regarding service of designated exhibits have been ruled upon have been denied. The Hearing Officer should reject outright Sprint's effort to relitigate issues already resolved.

B. Sprint's Claimed "Facts" Concerning the Watkins Rebuttal Testimony

Mr. Watkins is not a stranger to this Commission. He has testified in Application No. C-1628 (the original NUSF docket), in Application No. C-3096, et al. (the dockets in which the rural ILECs requested suspension of intermodal LNP implementation), and most recently in Application No. C-3228 (the Time Warner certification docket). He is *not* employed with the Kraskin, Moorman & Cosson law firm. As his testimony and attached Exhibit A disclose, he is a "Special Telecommunications Management Consultant" to that law firm. In any event, the circumstances of Mr. Watkins' employment and Sprint's contention of bias (Motion, p. 7) are no more relevant to this matter than is the fact that Sprint's witness, Mr. Burt is employed as Director-Regulatory Policy for an affiliate of Sprint. This claim by Sprint is not only factually incorrect, it is entirely irrelevant to the Motion.

With regard to the excerpts of the transcript of the C-3228 hearing attached to Mr. Watkins' testimony, the entire transcript was included in the Exhibit Designations as Exhibit 16. The Hearing Officer has denied Sprint's attempt to exclude Exhibit 16 from evidence in his ruling on the Motion in Limine. The references by Mr. Watkins to portions of the C-3228 transcript to rebut Mr. Burt's Direct Testimony are entirely proper. No purpose is served by a re-hash of Sprint's objections to receipt of the C-3228 transcript or excerpts thereof in evidence. Sprint's effort to obtain a "second bite of the apple" should be rejected.

Sprint asserts that "Mr. Watkins' testimony is largely duplicative of the evidence presented by SENTCO in its case-in-chief . . ." (Motion, p. 3) While SENTCO's position is that Mr. Watkins' testimony is proper rebuttal to Mr. Burt's Direct Testimony, if, as Sprint asserts, such testimony is "duplicative" then there certainly can be no harm to Sprint in the receipt of such testimony. No surprise or prejudice arises from the submission of duplicative testimony.

C. Sprint's Claim that Watkins' Testimony Addresses Questions of Law

Section III.A of the Motion cites Nebraska Rule of Evidence 702 (*Neb. Rev. Stat.* § 27-702) and three Nebraska cases purportedly supporting its claim that Mr. Watkins' testimony is inadmissible for the reason that it addresses issues of law. SENTCO's first response to this claim is that Sprint has invoked the wrong standard for determining admissibility of evidence in this case. The evidentiary standard applicable to the Commission's receipt of evidence at the hearing of this matter is set forth in *Neb. Rev. Stat.* § 84-914(1) (Reissue 1999):

> An agency may admit and give probative effect to evidence which possesses probative value commonly accepted by reasonably prudent persons in

> the conduct of their affairs and exclude incompetent, irrelevant, immaterial, and unduly repetitious evidence.

The Nebraska Rules of Evidence do not apply to this case. Sprint is obviously aware of the procedures that must be followed to invoke the Rules of Evidence in a hearing before this Commission – it did so in Application No. C-3204 as the Hearing Officer will recall. It has not done so in this case and any such attempt at this juncture would be untimely pursuant to § 84-914(1). The above standard accords to the Commission the discretion to admit and to accord probative effect to evidence. SENTCO does not agree that Mr. Watkins testimony improperly addresses questions of law, but in any event such testimony has probative value in this matter and is properly received pursuant to § 84-914(1).

The cases cited by Sprint in Section III.A of its Motion are irrelevant. The relevant principle of law is set forth in *Beasley v. City of Omaha,* 212 Neb. 153, 155 (1982) that holds:

> The nature of evidence deemed competent in the context of administrative hearings has also been established. It is that which is relevant, admissible, and tends to establish the facts in issue; *however, the investigation conducted by an administrative body is not intended to be carried out in observance of the technical rules adopted by courts of law.* (citing *Shepherd v. City of Omaha,* 194 Neb. 813 (1975) and *Munk v. Fink,* 81 Neb. 631 (1908) (emphasis added)

Further, even if Sprint's position were well-taken, much of Mr. Burt's Direct and Rebuttal Testimonies would be properly excluded for the very reason that Sprint asserts against the Watkins Rebuttal Testimony. For example, in Mr. Burt's Rebuttal he states: (a) Lines 33-35 "As I have explained, there is no such requirement in the Act . . ."; (b) Lines 49-52 "Sprint seeks interconnection with SENTCO because Sprint is a telecommunications carrier proposing to provide telecommunications services as defined

in the Act . . ."; (c) Lines 88-91 ". . . there is no requirement under the Act that an entity provide billing and customer service functions to the subscribers of the services in order for that entity to be entitled to interconnection and reciprocal compensation."; and (d) Lines 92-94 "Sprint is a telecommunications carrier providing telecommunications services under the Act." Further examples from Mr. Burt's Direct are: (a) Lines 299-304 "The Act requires all local exchange carriers, including CLECs, to resell their services."; (b) Lines 309-311 "Therefore, the business model being utilized by Sprint and TWC is consistent with a business model that is required in the Telecom Act."; (c) Lines 332-334 "Regardless of the scenario selected, the Act established a framework to permit competitors to enter the market . . ." and (d) Lines 528-530 "It [the Sprint/TWC model] is one that fits fully within the flexible framework set forth in the Act . . ." While this list could go on, these excerpts clearly demonstrate that Mr. Burt is referring to conclusions that he purports are supported by facts of which he is presumably aware. Mr. Watkins has done the same based on his considerable expertise concerning the practical implementation of the Act's directives, which expertise is conceded by Sprint based upon Sprint's reference to Mr. Watkins as an expert (Motion, pages 6-7).

In short, Sprint's contention that Mr. Watkins is testifying concerning the law has no basis. Mr. Watkins' testimony should be properly received in evidence in this case.

D. Mr. Watkins' Testimony is Admissible as Proper Rebuttal Testimony

Sprint is the petitioner in this case. Sprint has the burden of proof. Sprint's legal counsel participated in the planning conference that resulted in the entry of the Planning Conference Order. Such Order established a schedule for filing of direct and rebuttal testimonies. It did *not* provide that only witnesses filing direct testimony we permitted to

file rebuttal testimony. It is absolutely procedurally correct that Mr. Watkins' testimony was submitted as rebuttal and not direct testimony.

The purposes of Mr. Watkins' testimony are set out on pages 2 and 3 thereof. The pages of the testimony following the statement of purposes are saturated with references to the Mr. Burt's Direct Testimony and Mr. Watkins' rebuttal thereof. Fifty-three references to Mr. Burt by name occur in the Rebuttal Testimony. Rather than providing any specifics to the Hearing Officer as to any portions of the Rebuttal Testimony that are new matters, Sprint attempts the broad-brush approach of citing three cases that recite the general proposition as to the purpose of rebuttal testimony (Motion, p. 5) and then moves on the general claim that Mr. Watkins' testimony "simply mirrors SENTCO's case in chief and reiterates SENTCO's position on the ultimate issue in this case." (Motion, p. 6) (Again, if this assertion were true, which SENTCO disputes, there could not be any prejudice to Sprint that might lend support to the Motion.)

To reinforce such generalizations, Sprint then returns to the theme of its Motion, invoking the invective of "sandbagging". Setting aside this unnecessary rhetoric, Sprint's claims are contrary the relevant evidentiary standard in § 84-914(1).

The Commission is quite familiar with the holding of *Paulk v. Central Laboratory Associates,* 262 Neb. 838 (2001) by reason of the fact that in Formal Complaints No. FC-1296 and 1297 (the dispute regarding Qwest's SS7 message charges), a discovery dispute arose immediately prior to hearing in which *Paulk,* as well as *Schindler v. Walker,* 256 Neb. 767 (1999) were considered by the Commission in connection with its decision to exclude certain evidence. (The Commission's ruling in FC-1296 and 1297 was reviewed

and was not disturbed by the Nebraska Supreme Court in *Cox Nebraska Telcom v. Qwest Corp.*, 268 Neb. 676 (2004).) However, this is not a matter similar to *Paulk* or to *Cox*.

As stated above, the Planning Conference Order set the schedule for filing of direct and rebuttal testimonies. Such Order placed no limits on the parties that only witnesses filing direct testimony could file rebuttal testimony. Further, there is absolutely no requirement in such Order to identify expert witnesses at any point in time. SENTCO followed the requirements of the Planning Conference Order to the letter. There has been no "unfair surprise", there is no "trial by ambush", and there is certainly no "sandbagging". What does exist, however, is unavailing complaining by Sprint that is without legal or factual grounds. Sprint's arguments in Section II.B of the Motion are unavailing.

E. Sprint's Attempt to Exclude References to the C-3228 Transcript has been Overruled in the Hearing Officer's August 5, 2005 Order

Undeterred, Sprint once again attempts to relitigate the arguments advanced in the Motion in Limine regarding the Application No. C-3228 transcript. See, Section III.C of the Motion. SENTCO addressed Sprint's attempt to exclude this transcript from evidence in its Response to the Motion in Limine, pages 13-14. Therein, SENTCO directly referred to Mr. Watkins' Rebuttal Testimony and the fact that portions of the transcript are attached to such testimony. The Hearing Officer weighed the arguments concerning Sprint's Motion In Limine that sought to exclude the transcript (labeled in the Exhibit Designation as Exhibit 16), and ruled:

> Upon consideration of the motion, the Hearing Officer finds the motion in limine should be denied with respect to exhibit . . .16.

Hearing Officer Order, page 1.

With regard to Sprint's attempt to exclude the Commission's C-3228 Order from evidence (Motion, page 8, referring to Attachment C to Mr. Watkins' Testimony), the Commission is unquestionably entitled to take administrative notice of its prior orders. The legal basis for this result is set forth at length in SENTCO's Response to Sprint's Motion in Limine, pages 6-8, and in the interest of brevity will not be repeated herein. Sprint's Section III.C arguments have no greater validity than any of the remaining claims set forth in the Motion to Strike.

CONCLUSION

For the reasons set forth herein, SENTCO respectfully requests that the Hearing Officer enter his Order denying the Motion to Strike.

Dated: August 9, 2005.

SOUTHEAST NEBRASKA TELEPHONE COMPANY

By: Paul M. Schudel

Paul M. Schudel, No. 13723
James A. Overcash, No. 18627
WOODS & AITKEN LLP
301 South 13th St, Ste 500
Lincoln, NE 68508
(402) 437-8500

and

Thomas J. Moorman, D.C. Bar No. 384790
KRASKIN, MOORMAN & COSSON, LLC
2120 L Street, N.W., Suite 520
Washington, D.C. 20037
(202) 296-8890
Its Attorneys

CERTIFICATE OF SERVICE

I hereby certify that true and correct copies of the foregoing **RESPONSE TO MOTION TO STRIKE** were sent by First-Class U.S. Mail and electronic mail on August 9, 2005, to the following:

Diane C. Browning
6450 Sprint Parkway,
Mailstop KSOPHN0212-2A511
Overland Park, KS 66251

Shana Knutson
Nebraska Public Service Commission
300 The Atrium
1200 N Street
Lincoln, NE 68508

Paul M. Schudel

0265

BEFORE THE NEBRASKA PUBLIC SERVICE COMMISSION

IN RE:	**APPLICATION NO: C-3429**
SPRINT COMMUNICATIONS COMPANY L.P.'S PETITION FOR ARBITRATION UNDER THE TELECOMMUNICATIONS ACT.	

RECEIVED
AUG 10 2005
NPSC-Comm. Dept.

SPRINT COMMUNICATIONS COMPANY L.P.'S MOTION TO STRIKE REBUTTAL TESTIMONY OF STEVEN E. WATKINS AND EXHIBITS THERETO

Sprint Communications Company L.P. (Sprint) hereby objects to the purported "rebuttal" testimony of Steven E. Watkins filed by Southeast Nebraska Telephone Company ("SENTCO"), and moves for an order striking the testimony and exhibits thereto in its entirety.

I. INTRODUCTION

Sprint initiated this proceeding to arbitrate an interconnection agreement with SENTCO with respect to a business model that Sprint intends to implement in certain rural areas within this Commission's jurisdiction. Although Sprint maintains that it has a right under the federal Telecommunications Act of 1996 to interconnect with SENTCO, SENTCO maintains that Sprint has no such right because Sprint is not a "telecommunications carrier" as defined in the Act. Sprint and SENTCO were given the opportunity to submit both direct and rebuttal testimony in support of their respective positions in advance of the hearing of this dispute. While Sprint timely prefiled testimony from James Burt to support its case-in-chief, SENTCO waited until rebuttal to submit expert testimony from Steven E. Watkins that plainly should have been prefiled as direct testimony. SENTCO's sandbagging has prejudiced Sprint's ability to respond and therefore Mr. Watkins' testimony should be stricken from the record in this matter.

Independent of SENTCO's improper sandbagging, Mr. Watkins' testimony is improper and inadmissible because it purports to interpret the Telecommunications Act, in violation of settled Nebraska law that precludes experts from testifying about questions of law. Moreover,

Mr. Watkins heavily relies upon an entirely separate CLEC Certification Proceeding to which Sprint was not a party, which is irrelevant and inadmissible in the instant proceeding. Finally, Mr. Watkins' testimony is suspect because he is employed full-time by SENTCO's attorneys of record. Accordingly, Sprint respectfully requests that the Commission strike the testimony of Mr. Watkins in its entirety from the record in this matter.

II. FACTUAL BACKGROUND PERTINENT TO SPRINT'S MOTION TO STRIKE

A. Background Of The Instant Proceeding.

Following a period of negotiation, on or about May 20, 2005, Sprint filed its Petition for Arbitration Under the Telecommunications Act ("Sprint's Petition"). Sprint sought the Commission's participation to confirm that Sprint is a "telecommunications carrier" under the Act with respect to the proposed services and thus that Sprint is entitled to interconnection with SENTCO pursuant to Section 251(a) of the Act, and is entitled to certain requirements set forth in Section 251(b) of the Act. After discussion with and the agreement of the parties, the Commission entered a procedural order in this case, pursuant to which the parties agreed to propound and responded to written discovery requests, then prefile all direct testimony and any exhibits they intended to rely on at the hearing by July 25, 2005, and to file rebuttal testimony on August 3, 2005. The hearing is set for August 10, 2005.

B. SENTCO States Its Intent To Rely On Documents From A CLEC Certification Proceeding To Which It Was A Party, But Sprint Was Not, And Which Raised Only State Law Issues, But SENTCO Does Not Produce Those Documents To Sprint

In its discovery responses, SENTCO identified virtually all documents filed in another commission proceeding to which SENTCO and Time Warner were parties ("The Time Warner CLEC Certification Proceeding") but to which Sprint was not a party. In addition, SENTCO identified those documents in the Exhibit Designations that it filed on July 25, 2005 with its pre-filed direct testimony. SENTCO did not produce, however, any of the documents from the

Time-Warner CLEC Proceeding that it identified and designated.

C. Sprint Submits Direct Testimony Of James Burt.

As part of its case in chief, Sprint submitted the direct testimony of James Burt, the Director of Regulatory Policy for Sprint/United Management Company. Among other things, Mr. Burt's testimony describes the type of telecommunications service that Sprint proposes to provide in SENTCO's serving territories, the network Sprint will use to provide that service, and how Sprint's proposed service compares to other that have qualified for interconnection under the Telecommunications Act of 1996. Mr. Burt explains that Sprint's proposed business model will utilize the combined resources of two service providers to bring cost-effective new voice telecommunications services to Nebraska customers sooner than if either service provider attempted to provide the service alone. Mr. Burt further explains how its business model furthers the pro-competitive goals of the Telecommunications Act.

D. SENTCO Submits "Rebuttal" Testimony Of Steven E. Watkins And Attaches Select Excerpts From The Documents From The CLEC Proceeding, Which It Has Not Produced To Sprint

In purported "rebuttal" to Mr. Burt's testimony, SENTCO submitted the testimony of Steven E. Watkins as an "expert" in the field of compliance with the rules and regulations arising from the Telecommunications Act of 1996. Mr. Watkins is employed as a full-time Special Telecommunications Management Consultant to the Washington D.C. law firm of Kraskin, Moorman & Cosson, LLC, attorneys of record for SENTCO in this proceeding. Mr. Watkins' testimony is largely duplicative of the evidence presented by SENTCO in its case-in-chief in that it simply reiterates SENTCO's argument that Sprint is not a telecommunications carrier for purposes of its proposed business model. Moreover, the nature of the "rebuttal," while nominally tied to Mr. Burt's testimony, was well known (particularly all the legal assertions) to SENTCO in advance of the direct testimony filing deadline. In addition, Mr. Watkins relies

heavily on the Time Warner CLEC Certification Proceeding and attaches excerpts of certain documents filed in that proceeding.

Meanwhile, Sprint moved in limine for an order prohibiting SENTCO from introducing documents from the Time Warner CLEC Certification Proceeding on the ground that Sprint was not a party to that proceeding, did not have a chance to review the documents in that proceeding, and SENTCO had not produced them to Sprint in this case. Sprint further argued that the Time Warner CLEC Certification Proceeding presented only state law issues and thus was irrelevant. On August 8, the Commission entered an order granting in part and denying in part Sprint's motion in limine to exclude documents from the CLEC Certification Proceeding.

III. ARGUMENT

A. Mr. Watkins' Testimony Is Improper Because It Constitutes Expert Testimony On A Question of Law.

Expert testimony is relevant and admissible only if it tends to help the trier of fact understand evidence or to determine a factual issue. Accordingly, it is settled that expert testimony concerning a question of law does not accomplish this goal. *Sports Courts of Omaha, Ltd. v. Brower*, 248 Neb. 272 (1995); *Schmidt v. Omaha Pub. Power Dist.*, 245 Neb. 776 (1994) (expert testimony concerning the status of the law does not accomplish the goals or requirements of Nebraska Evidence Rule 702 and generally is not admissible). Indeed, any expert testimony purporting to address an issue of law is inadmissible under longstanding Nebraska law. *See, e.g., Baker v. Fabian, Thielen & Thielen*, 254 Neb. 697, 703 (1998).

The *Sports Courts* case, 248 Neb. 272 (1995) is illustrative. In *Sports Courts,* a law professor testified that the cumulative effect of post-default actions by an attorney on behalf of his client with regard to capital stock constituted a disposition of collateral under Nebraska law, in connection with the plaintiff's claim that his attorney was negligent. *Sports Courts,* 248 Neb. at 277-78. The Nebraska Supreme Court held that the district court erred in receiving the law professor's opinion regarding the status of the law, noting that "whether [the attorney's] actions constitute a disposition of the stock as contemplated by §9-504 resolves itself into a matter of

statutory interpretation, which is a question of law." *Id.* at 278.

The nature of Mr. Watkins' testimony here is no different than that of the law professor in *Sports Courts*. Mr. Watkins professes that he is an expert on the FCC's interconnection rule definitions and the proper application of such rules in this case. (Watkins Testimony at 1:11-2:6) His testimony details the purported requirements of section 251(b) of the Telecommunications Act and purports to opine as to its application to the facts at hand to come to the ultimate legal conclusion that Sprint is not a "telecommunications carrier" within the meaning of the Act. (*Id.* at 5:17-6:5, 16:23-14:3, 16:6-10, 20:15-21:14) Such testimony invades the province of this Commission to determine the application of the Act in this case and should be disregarded.

B. The Testimony of Mr. Watkins Constitutes Improper Rebuttal Testimony And Should Be Stricken On That Basis As Well.

It is settled that rebuttal evidence must be confined to new matters first introduced by the opposing party and is not an opportunity to bolster, corroborate, reiterate, or repeat issues raised in a party's case in chief. *Stern v. On Time Freight System, Inc.*, 1 Neb. App. 302, 309-310 (1992). Accordingly, rebuttal evidence is ordinarily confined to that which explains, disproves or counteracts evidence introduced by the adverse party. *Wright v. Forney*, 233 Neb. 258, 260 (1989). Rebuttal is not intended to give a party an opportunity to tell his story twice or to present evidence that was proper in his case in chief. *Wright, supra,* 233 Neb. at 260. For instance, in *Stern*, the court held that a former employee's proffered rebuttal testimony as to whether he had contacted a particular person regarding a job after he was discharged was an attempt to bolster his case-in-chief with respect to mitigation and was therefore improper rebuttal. *Stern, supra*, 1 Neb. App. 302 at 309-310.

It is also settled that rebuttal testimony which could have been brought during a party's case-in-chief, or is otherwise cumulative or duplicative of evidence presented during a party's case-in-chief, is similarly improper. *Ashby v. First Data Resources, Inc.*, 497 N.W. 2d 330, 336 (Neb. 1993) (holding that the trial court did not err in excluding rebuttal testimony which was cumulative of evidence presented during case in chief).

1. Mr. Watkin's Rebuttal Testimony Is Improper.

Mr. Watkins' testimony is *not* confined to that which explains, disproves or counteracts evidence introduced by Sprint. Indeed, it simply mirrors SENTCO's case in chief and reiterates SENTCO's position on the ultimate issue in this case: that Sprint is not a "telecommunications carrier" under the FCC for purposes of the RLEC certification proceeding. The information contained within Mr. Watkins' testimony was known to SENTCO in advance of Sprint's submission of Mr. Burt's testimony, and relates to its case-in-chief. Because it could have, and should have, been submitted as part of SENTCO's case-in-chief, and because it simply reiterates SENTCO's defense in this case, it is improper rebuttal testimony and should be stricken.

SENTCO's sandbagging is particularly egregious with respect to Mr. Watkins' discussion of the Time Warner CLEC Certification Proceeding. Although SENTCO was a party to that proceeding, Sprint was not. Yet, although SENTCO announced its intent to rely on documents from that proceeding in its discovery responses and Exhibit Designations, it never produced those documents to Sprint. Instead, for the first time in rebuttal, Sprint received Mr. Watkins' hearsay account of that proceeding and *selected* excerpts from the documents in that proceeding. Sprint's ability to counter Mr. Watkins' selective rendition has been severely prejudiced because Sprint was not a party to the Time Warner CLEC Certification Proceeding, and SENTCO never produced the documents from that proceeding to Sprint. Indeed, although SENTCO has made clear that it intends to confront Mr. Burt with the testimony he provided in Sprint's CLEC proceeding, to which SENTCO was a party, Sprint cannot confront Mr. Watkins with his prior testimony in the Time-Warner CLEC Proceeding because Sprint was not a party to that proceeding, and SENTCO never produced Mr. Watkins' prior testimony.

This is trial by ambush and should not be allowed.

2. The Commission Should Not Reward SENTCO's Sandbagging By Admitting Mr. Watkin's Testimony.

The Commission should not exercise discretion to admit Mr. Watkins' improper testimony because SENTCO's use of this expert testimony in rebuttal, rather than in its case in

chief, was an attempt to "sandbag" Sprint's case. SENTCO's failure to properly present Mr. Watkins' expert testimony during its case in chief unfairly deprived Sprint of the opportunity to rebut it with expert testimony of its own or to investigate Watkins' assertions regarding the Time Warner CLEC Certification proceeding. Furthermore, it is settled that previously-undisclosed expert testimony used in such a manner as to deprive the adverse party of an opportunity to obtain competing expert testimony constitutes unfair surprise and should be disregarded. *See, e.g. Paulk v. Central Laboratory Associates*, 262 Neb. 838, 847-848 (2001) (disclosure at trial of expert witness opinion not disclosed before trial constituted inadmissible unfair surprise).

In addition, Mr. Watkins is closely associated with, and is in fact employed by, counsel of record for SENTCO and is therefore inherently biased towards SENTCO as well as intimately interested in the outcome of this proceeding. In light of these circumstances, the Commission should not give credence to the testimony of this witness. *See Palmer v. Forney*, 230 Neb. 1, 7-8 (1988) (the trier of fact should give expert testimony only the weight that appears appropriate in light of the circumstances of the case). For these reasons, the Commission should not exercise its discretion in favor of admitting Mr. Watkin's improper rebuttal testimony.

C. Sprint Was Not A Party To The Time Warner CLEC Certification Proceedings Upon Which Mr. Watkin Relies And Therefore Mr. Watkins' Testimony In Reliance On Those Materials Should Be Stricken.

There is another aspect of Mr. Watkins' testimony that requires it be stricken irrespective of how the Commission rules on the other grounds Sprint has raised: Mr. Watkins improperly relies on a proceeding in which Sprint was not a party as a basis for much of his testimony.

Sprint was not a party to, and did not participate in, the Time Warner CLEC Certification Proceeding. Sprint thus had no opportunity to examine or cross-examine either Time Warner or SENTCO witnesses in connection with that proceeding, and no opportunity to object to the introduction into evidence of any of the exhibits in that proceeding.

Moreover, SENTCO did not timely produce, in response to Sprint's discovery requests, the documents on which it intends to rely. After the deadline for supplementing discovery

responses (July 25, 2005) passed, SENTCO injected Mr. Watkins' selective rendition of those proceedings for the first time at the rebuttal stage.

Mr. Watkin's use of the Time-Warner CLEC Certification Proceeding documents also is irrelevant to this case because unlike here, which is an action solely under the federal Act, the Time-Warner CLEC Certification Proceeding presented only state law issues that are distinguishable from this case. The only evidence relevant to the instant proceeding is the proposed interconnection agreement and the evidence produced and admitted during this proceeding. Some of SENTCO's discovery requests prove that it understood that it was required to propound whatever discovery it wanted from Sprint in this case. For example, although SENTCO apparently had at least one copy of the Sprint-Time Warner agreement from other proceedings, it nevertheless propounded a request for that agreement here. Sprint complied and provided a redacted copy subject to the protective order in this case. SENTCO clearly could have propounded whatever discovery it determined it needed in this case from Sprint (or from third parties). Having failed to do so, however, SENTCO cannot avoid its failure to seek discovery by injecting at the rebuttal stage "expert" testimony that relies heavily on a distinct docket which presented distinguishable state law issues.

Because Mr. Watkins should not be allowed to give testimony based on the Time-Warner CLEC Certification Proceeding, Sprint respectfully requests that the Commission strike the following: Watkins Testimony at 2:22-3:2, 4:3-7, 4:20:10:5, 14:6-15:17, 17:15-18:4, 21:4-8 and Attachments B and C to Mr. Watkins' Testimony.

III. CONCLUSION

The parties met with the Commission to establish an orderly and fair schedule for the exchange of discovery and prefiled testimony relevant to the issues in this proceeding. SENTCO now is attempting to distort the Commission's resolution of those issues by injecting "expert" testimony on issues of law at the rebuttal stage, and selectively injecting irrelevant material from another proceeding to which Sprint was not a party. The Commission should strike Mr. Watkins' testimony in its entirety and decide the important issues presented based on the relevant

and properly filed material before it.

DATED this the 8th day of August, 2005.

SPRINT COMMUNICATIONS COMPANY L.P.

By: Diane Browning

Diane C. Browning

Attorney – Law and External Affairs
6450 Sprint Parkway
KSOPHN0212-2A511
Overland Park, KS 66251
913-315-9284
913-523-0571 (fax)

And

REED SMITH LLP
Darren S. Weingard
Raymond A. Cardozo
Two Embarcadero Center, Suite 2000
San Francisco, CA 94111
(415) 543-8700

0274

CERTIFICATE OF SERVICE

I hereby certify that true and correct copies of the foregoing **Sprint Communications Company L.P.'s Motion to Strike Rebuttal Testimony of Steven E. Watkins and Exhibits Thereto,** were sent by First-Class U.S. Mail and electronic mail on August 8, 2005, to the following:

Paul M. Schudel
James A. Overcash
Woods & Aitken LLP
301 So. 13th St., Suite 500
Lincoln, NE 68508

Shana Knutson
Nebraska Public Service Commission
300 The Atrium
1200 N Street
Lincoln, NE 68508

Diane C. Browning

0275

BEFORE THE NEBRASKA PUBLIC SERVICE COMMISSION

IN RE:	)Application No.
	) C-3429
SPRINT COMMUNICATIONS COMPANY	) **TRANSCRIPT OF**
L.P. PETITION FOR ARBITRATION	) **PROCEEDINGS**
UNDER THE TELECOMMUNICATIONS	) VOLUME I
ACT.	) TESTIMONY
	)(Pages 1 to 157)

Proceedings had before the Nebraska Public Service Commission at 1200 N Street, Suite 300, Lincoln, Nebraska, on August 10, 2005.

COMMISSIONERS:

Frank E. Landis, 1st District
Anne C. Boyle, 2nd District
Lowell C. Johnson, 3rd District

ORIGINAL

RECEIVED
AUG 16 2005
Com. Dept.

0276

1 APPEARANCES:

2 Mr. Paul M. Schudel
Attorney at Law
3 301 South 13th Street
Suite 500
4 Lincoln, NE 68508
- and -
5 Mr. Thomas J. Moorman
Attorney at Law
6 2120 L Street, N.W.
Suite 520
7 Washington, D.C. 20037 for Southeast Nebraska
Telephone Company
8

Mr. Darren S. Weingard
9 Attorney at Law
Two Embarcadero Center
10 Suite 2000
San Francisco, CA 94111
11 - and -
Ms. Diane C. Browning
12 Attorney at Law
6450 Sprint Parkway
13 Overland Park, KS 66251 for Sprint
Communications
14

Ms. Shana L. Knutson
15 Legal Counsel
1200 N Street
16 Suite 300
Lincoln, NE 68509 for Nebraska Public
17 Service Commission

18

19

20

21

22

23

24

25

I-N-D-E-X

WITNESSES

FOR SPRINT	Direct	Cross	Redirect	Recross
J. Burt	24	32-Schudel 58-Knutson	66,100	98-Schudel
FOR SENTCO				
E. Sickel	103	111-Knutson 119-Weingard	129 ~~12~~	130-Weingard
S. Watkins	132	--	147	--

PSC EXHIBITS	Marked	Offered	Ruled On	Found
No. 1 5-27-05 Daily Record Publication	7	7	7	V.II
No. 2 Planning Order	7	7	7	V.II

SPRINT EXHIBITS	Marked	Offered	Ruled On	Found
No. 100	7	--	--	W/D
No. 101	7	--	--	W/D
No. 102 Burt Direct Testimony	7	22	23	V.II
No. 103 Burt Rebuttal Testimony	7	22	23	V.II
No. 104 Planning Conference Order	7	22	23	V.II
No. 105 Hearing Officer Order	7	22	23	V.II
No. 106 Current Network Config-Lincoln	7	22	23	V.II
No. 107 Network Config Envisioned	7	22	23	V.II
No. 108 Affidavit of Jeffrey Woosley	7	22	23	V.II

SENTCO EXHIBITS	Marked	Offered	Ruled On	Found
No. 1 Petition	7	18	20	V.II
No. 2 Motion to Dismiss	7	18	20	V.II
No. 3 Prefiled Direct-Sickel	7	112	20,113	V.II
No. 4 1-12-05 Letter to Barone from Schudel with Attachments	7	18	20	V.II
No. 5 Amended App.	7	18	20	V.II
No. 6 Sprint's Response to Intervenors' Data Request	7	18	20	V.II
No. 7 Sprint's Confidential Responses	44	49	20,51	V.II
No. 8 Testimony of Burt	7	18	20	V.II
No. 10 11-4-04 Transcript	7	18	20	V.II
No. 12 Application and Request for Authority	7	18	20	V.II
No. 13 Applicant Responses and Objections to Data Requests	7	18,149	151	V.II
No. 14 Patterson Direct Testimony	7	18,152	154	V.II
No. 16 Transcript C-3228	7	18	20	V.II
No. 18 Tariff Schedule	7	18	20	V.II
No. 19 TWC Tariff No. 1	7	18	20	V.II
No. 20 Sprint's Responses to Interrogatories and Request for Admissions	7	18	20	V.II
No. 21 Sprint's Tariff No. 2	7	18	20	V.II

SENTCO EXHIBITS	Marked	Offered	Ruled On	Found
No. 22 Prefiled Rebuttal-Watkins	7	143	143	V.II
No. 23 Burvainis Certificate	7	18	20	V.II
No. 24 Bogus Certificate	7	18	20	V.II
No. 25 Bogus Certificate	144	154	155	V.II

1 C E R T I F I C A T E

2 I, Lori J. McGowan, Court Reporter, do
3 hereby certify that the within and following
4 complete transcript contains all the evidence
5 requested to be transcribed by me, and the
6 rulings of the court thereon, from the
7 proceedings had in or at the trial of the
8 foregoing cause in said court; and that said
9 complete transcript is a correct and complete
10 transcription of the evidence requested to be
11 transcribed from the record made at the time of
12 said proceedings or trial.

13 Dated this 16th day of August, 2005.

14

15

16 Lori J. McGowan
Court Reporter

17

18

19

20

21

22

23

24

25

1 (At 10:02 a.m., the following
2 proceedings were had:)
3 (Exhibit Nos. 1 through 6, 8,
4 10, 12 through 14, 16, 18
5 through 24 marked for
6 identification on behalf of
7 SENTCO.)
8 (Exhibit Nos. 100 through 108
9 marked for identification on
10 behalf of Sprint.)
11 COMMISSIONER LANDIS: Application
12 in Docket C-3429 will come to order. I'm Frank
13 Landis. And I've been designated the hearing
14 officer for this arbitration we're conducting
15 this morning.
16 To my far right is Commissioner Anne
17 Boyle.
18 To my near right is Commissioner Lowell
19 Johnson.
20 The commission chairman, Jerry Vap, is
21 at a distance learning conference today.
22 The court reporter this morning is Lori
23 McGowan.
24 And the attorney representing the
25 commission that's handling this docket is

1 Ms. Shana Knutson.
2 Application filed on May 23rd of this
3 year, Sprint Communications Company of
4 Overland, Kansas, petitioned for arbitration
5 under the Telecommunications Act of certain
6 issues associated with the proposed
7 interconnection agreement between Sprint and
8 Southeast Nebraska Telephone Company, hereafter
9 SENTCO.
10 Notice of the application appeared in
11 the Daily Record, Omaha, Nebraska, on May 27th
12 of this year. And, Lori, that will become PSC
13 Exhibit No. 1.
14 (Exhibit No. PSC 1 marked for
15 identification.)
16 COMMISSIONER LANDIS: Planning
17 conference order setting this hearing was
18 entered on June 28th, 2005. And we will make
19 that PSC Exhibit No. 2.
20 (Exhibit No. PSC 2 marked for
21 identification.)
22 COMMISSIONER LANDIS: At this
23 time then we will take appearances.
24 Let's start over here, Mr. Moorman, with
25 you.

1 MR. MOORMAN: Thank you,
2 Commissioner. My name is Thomas J. Moorman,
3 Kraskin, Moorman & Cosson, comma, LLC, 2120 L
4 Street, Northwest, Suite 520, Washington, D.C.,
5 20037, appearing on behalf of Southeastern
6 Telephone -- Southeast Nebraska Telephone
7 Company.
8 COMMISSIONER LANDIS: Okay.
9 Thank you, Mr. Moorman.
10 MR. SCHUDEL: Co-counsel for
11 Southeast Nebraska Telephone Company, my name
12 is Paul Schudel. I'm with the Woods & Aitken
13 Law Firm, 201 -- 301 South 13th Street, Suite
14 500, Lincoln, Nebraska.
15 COMMISSIONER LANDIS: Mr.
16 Schudel, thank you.
17 MS. KNUTSON: For the
18 commission, please enter the appearance of
19 Shana Knutson.
20 COMMISSIONER LANDIS: Mrs.
21 Knutson.
22 MS. BROWNING: For Sprint, Diane
23 Browning.
24 MR. KISTLER: Commissioner,
25 Bradford Kistler with the law firm of Kinsey,

1 Ridenour, Becker & Kistler, Box 85778, Lincoln,
2 68501, appearing for Sprint.
3 And it's my pleasure this morning to
4 introduce Diane Browning. Ms. Browning is an
5 attorney admitted to the practice before the
6 bar of the State of Missouri or the Supreme
7 Court of Missouri, would move for admission for
8 purposes of this proceeding.
9 COMMISSIONER LANDIS: Granted.
10 MR. KISTLER: Also, Mr. Darren
11 Weingard. Mr. Weingard is an attorney admitted
12 to practice before the Supreme Court of the
13 State of California and also Illinois. And
14 we'd move his admission as well for purposes of
15 this proceeding.
16 COMMISSIONER LANDIS: That will
17 be granted.
18 MR. KISTLER: Finally, while not
19 present this morning, Raymond Cardozo, also an
20 attorney admitted to practice before the
21 Supreme Court of the State of California may
22 have some subsequent involvement in this case.
23 And I would move his admission as well at this
24 time.
25 COMMISSIONER LANDIS: That will

1 be granted.
2 MR. KISTLER: With that I would
3 ask to be excused from the hearing room.
4 COMMISSIONER LANDIS: You're
5 excused, Mr. Kistler. Thank you.
6 MR. WEINGARD: Good morning,
7 Commissioners, Fellow Commissioners, I'm Darren
8 Weingard. I'm an attorney with Reed, Smith,
9 LLP, in San Francisco, California. I've given
10 my address to the court reporter. And I am
11 here representing petitioner. The correct name
12 is Sprint Communications Company, L, period, P,
13 period.
14 COMMISSIONER LANDIS: Okay.
15 Thank you, Mr. Weingard.
16 With that then, are there any
17 preliminary matters before we get started?
18 There have been several rulings on
19 motions leading up to this point in time. Are
20 there objections that want to be placed on the
21 record before we -- I'd rather get it done at
22 the start of the proceeding rather than the
23 middle of it. So, Mr. Weingard.
24 MR. WEINGARD: Thank you,
25 Mr. Commissioner. Yes, I just -- in the

1 interest of preserving, this will be a
2 continuing objection on the record. We
3 understand and have received the commission --
4 or the hearing officer's order on our motion
5 in limine dated August 5th, 2005, admitting
6 certain documents into -- well, not excluding
7 certain documents from the record and allowing
8 them to be offered for admission.
9 We made a subsequent motion which I
10 think was filed on Monday to strike the
11 testimony of Mr. Steven Watkins, expert witness
12 for SENTCO, Southeast Nebraska Telephone
13 Company.
14 We understand that a ruling has been
15 made on the motion to strike Mr. Watkins'
16 testimony, allowing it to come in and that an
17 order will be out, served on the parties
18 shortly.
19 So I would like to just preserve an
20 ongoing objection that by examining
21 Mr. Watkins, Sprint does not waive any of the
22 objections it made to his testimony.
23 Specifically we are concerned and object to his
24 testimony, the legal nature of the testimony.
25 And I understand that a ruling has been made on

1 that.
2 Sprint objects to the fact that the
3 transcript from the Time Warner proceeding has
4 been ruled as potentially being offered into
5 evidence and offered into evidence in this
6 case, in a proceeding, the Time Warner CLEC
7 certification proceeding that Sprint was not a
8 party to and did not get service of any of
9 those documents, including the transcript from
10 that proceeding.
11 We object to SENTCO's offering portions
12 of the transcript from the Time Warner CLEC
13 certification proceeding in an apparent effort
14 to impeach Sprint's witness, Mr. Jim Burt.
15 Sprint was not available to cross-examine any
16 of the SENTCO witnesses in that case, having
17 not appeared there but, more specifically,
18 objects to only portions of that transcript
19 being offered as impeachment testimony against
20 Sprint because up until a few minutes ago when
21 Mr. Schudel gave me the marked exhibit -- I
22 think it's going to be Exhibit 17 -- 16,
23 rather -- we had not received a copy, service
24 copy of the transcript from that hearing.
25 So pursuant to the commission rule of

1 procedure 16.06, I just want to get it on the
2 record that Sprint reserves the right to in its
3 post-hearing brief or comments, however they're
4 styled, have the opportunity to place into
5 argument any other portion from that CLEC
6 certification transcript before this commission
7 that it deems appropriate because to this date,
8 we have only seen the 11 pages of it that was
9 attached to Mr. Watkins' testimony.
10 With that, I will not make a continuing
11 objection. I will not object to, you know,
12 renewing my objection at the beginning of his
13 testimony or at any point on those points.
14 COMMISSIONER LANDIS: Thank you,
15 Mr. Weingard. I appreciate you getting that on
16 record. Your objection's noted. It's
17 preserved.
18 Any other objections on the part of
19 Sprint?
20 Any objections on SENTCO's part that you
21 want to state now?
22 MR. SCHUDEL: No. I think at
23 this -- whenever you're prepared, it makes
24 sense for us to just quickly go through the
25 exhibits so we've got those in so we don't have

1 to disrupt the flow of the testimony if that's
2 acceptable to you. They've been marked.
3 COMMISSIONER LANDIS: Do you
4 want to do that now?
5 MR. SCHUDEL: If that's okay
6 with you.
7 COMMISSIONER LANDIS: That's
8 fine. I want to make this as easy and
9 efficient a proceeding as we possibly can.
10 Let's get that done and get on to the
11 witnesses.
12 MR. SCHUDEL: Commissioner,
13 during our prehearing brief, informal
14 conference we had, I believe it was recommended
15 by Ms. Knutson that there be, in effect, an
16 offer made of the record in light of the
17 Supreme Court's procedures on that. And so I
18 would just offer kind of jointly on behalf of
19 the parties all of the pleadings that are in
20 the record, including, if I may, the -- at
21 least on our part, the responses to the motion
22 in limine as well as the motion to strike.
23 MR. WEINGARD: No objection.
24 COMMISSIONER LANDIS: Very well.
25 Be admitted into evidence.

1 MR. SCHUDEL: Now, if I may,
2 I'll just proceed through my exhibit numbered
3 list. And I think either Ms. Browning or
4 Mr. Weingard has their list.
5 Exhibit No. 1 -- and these numbers are
6 consistent with the numbering which was used in
7 the motion in limine. Exhibit No. 1 is
8 Sprint's petition, been marked as Exhibit 1.
9 And I'll just read these off. Then I'll make
10 an offer.
11 Exhibit No. 2 is the response of
12 Southeast Nebraska.
13 Exhibit No. 3 is the testimony of
14 Ms. Sickel. In that regard I'd just comment I
15 will -- I will not offer it now. I will offer
16 it when she takes the stand. We've marked it
17 for convenience.
18 Exhibit No. 4 is a group of -- pieces of
19 correspondence between myself and Ms. Barone at
20 Sprint.
21 Exhibit No. 5 is Sprint's amended
22 application in C-3204.
23 Exhibit No. 6, Sprint's responses to
24 data requests in C-3204.
25 Exhibit No. 7 is confidential responses.

1 And because there's confidential material in
2 there, I have not given it to the reporter to
3 mark. We'll deal with that if and when it
4 arises.
5 Exhibit No. 8 is the prefiled testimony
6 of Mr. Burt in C-3204.
7 Now, we skipped nine because that was
8 withdrawn originally.
9 Exhibit No. 10 is the transcript of
10 C-3204.
11 Exhibit No. 11, we skipped that number
12 because that was withdrawn.
13 Exhibit No. 12 is the application of
14 Time Warner in No. C-3228.
15 Exhibit 13 is Time Warner's responses
16 and objections to data request in C-3228.
17 Exhibit 14 is the prefiled testimony of
18 Ms. Patterson in C-3228.
19 We skipped 15.
20 16, as Mr. Weingard identified, is the
21 transcript of the hearing in C-3228.
22 We skipped 17.
23 18 is Sprint Communications Company
24 L.P.'s tariff No. 1 on file with this
25 commission.

1 Exhibit 19 is Time Warner Cable's tariff
2 No. 1 on file with this commission.
3 Exhibit No. 20 is Sprint's responses to
4 Southeast Nebraska's data requests in this
5 case. And I might state the confidential
6 responses have been placed in an envelope with
7 a confidential cover sheet.
8 Exhibit 21 is Sprint's tariff No. 2,
9 access tariff.
10 Exhibit 22 is a copy of the Watkins
11 testimony which we will offer when Mr. Watkins
12 takes the stand.
13 Exhibit 23 is an affidavit of John
14 Burvainis concerning the tariffs that have been
15 offered.
16 And Exhibit 24 is an affidavit of
17 Ms. Bogus concerning the records from C-3204
18 and C-3228.
19 I would offer at this time Exhibits 1,
20 2, 4, 5, 6, skipping 7, 8, 10, 12, 13, 14,
21 skipping 15, 16, skipping 17, 18, 19, 20, 21,
22 23 and 24.
23 And I believe copies of each of those
24 that are not already clearly in the hands of
25 Sprint have been provided and are in counsel's

1 hands.
2 COMMISSIONER LANDIS: Okay.
3 Prepared to --
4 MR. WEINGARD: Ms. Browning is
5 going to discuss the exhibits Sprint premarked.
6 But with respect to the offer by counsel,
7 Sprint has no objection -- well, I'll just tell
8 you the ones I do have objections to. No
9 objections to anything that I don't include in
10 this.
11 Exhibits marked 13, which is the Time
12 Warner responses and objection to data request
13 in the Time Warner CLEC certification
14 proceeding; Exhibit 14, the prefiled direct
15 testimony, I assume it's direct testimony, of
16 Julie Y. Patterson in the CLEC certification
17 proceeding for Time Warner; and the prefiled
18 testimony of Mr. Watkins in the Time Warner
19 CLEC certification, are all supposed to be out
20 under this commission's order on the motion
21 in limine, which was August 5th, 2005. And so
22 Sprint does not agree that those can be
23 admitted into evidence pursuant to that order
24 and should not.
25 With respect to everything else that

1 Mr. Schudel identified, other than that which
2 he skipped, we have no objection.
3 COMMISSIONER LANDIS: Very well.
4 We're going to admit Exhibits 3 through 24, and
5 we're going to reserve, Lori, on Exhibit 22,
6 the offer of 22, the offer of 14, the offer of
7 13. But with the exception of those three,
8 we're admitting the balance of 3 through 24.
9 MS. KNUTSON: Commissioner, just
10 for the record, I thought that SENTCO had
11 withdrawn its request for Exhibit No. 15, which
12 was the prefiled testimony of Steven Watkins.
13 MR. SCHUDEL: We did.
14 MS. KNUTSON: Okay. So that
15 will also be excluded.
16 MR. SCHUDEL: Yeah.
17 COMMISSIONER LANDIS: Yes. 15,
18 we're not ruling -- there's nothing -- there
19 was no offer on 9, 15 or 17.
20 MS. KNUTSON: Okay.
21 MR. SCHUDEL: And 11.
22 COMMISSIONER LANDIS: And 11.
23 Correct.
24 MR. SCHUDEL: One and two, those
25 can come in if you wish to receive them.

1 COMMISSIONER LANDIS: Sure.
2 They'll be admitted.
3 (Exhibit Nos. 1 through 8, 10,
4 12, 16, 18 through 21 and 23
5 through 24 are made a part of
6 this record and may be found in
7 Volume II.)
8 COMMISSIONER LANDIS: Thank you,
9 Lori.
10 Diane, Sprint has some exhibits. If you
11 want to get them offered, let's get them
12 offered now.
13 MS. BROWNING: Yes. Our
14 exhibits are mostly documents that have already
15 been filed and are in the administrative
16 record. But for convenience of numbering and
17 identification, we have offered them and
18 numbered them.
19 We have offered Exhibit No. 100, which
20 is the petition for arbitration. I understand
21 Mr. Schudel has already -- he's already offered
22 that one.
23 Our Exhibit No. 101 is Sprint's
24 discovery responses in this proceeding.
25 Sprint's Exhibit No. 102 is Jim Burt's

1 direct testimony in this proceeding.
2 COMMISSIONER LANDIS: Okay.
3 MS. BROWNING: Sprint Exhibit
4 No. 103 is Jim Burt's rebuttal testimony in
5 this proceeding.
6 Sprint's Exhibit No. 104 is the -- I
7 have written down procedural order, but it may
8 also be referred to as the prehearing
9 conference order or planning conference order
10 in this proceeding.
11 COMMISSIONER LANDIS: Okay.
12 MS. BROWNING: Sprint Exhibit
13 No. 105 is the commission's order on the motion
14 in limine in this proceeding.
15 Sprint Exhibit No. 106 is Exhibit 1 to
16 Jim Burt's direct testimony which is attached
17 to that document.
18 Sprint's Exhibit No. 107 is Exhibit 2 to
19 Jim Burt's direct testimony in this proceeding,
20 which is also attached to that testimony.
21 Sprint's Exhibit No. 108 is Exhibit 3 to
22 Jim Burt's direct testimony in this proceeding,
23 which is also attached to that document.
24 COMMISSIONER LANDIS: Okay.
25 Mr. Schudel, any objection?

1 MR. SCHUDEL: Just to be clear
2 with Ms. Browning, I believe 100 would then
3 correspond to Exhibit No. 1? Would that be
4 fair?
5 MR. WEINGARD: Correct. We'll
6 withdraw 100 so there's no confusion.
7 MS. BROWNING: Yeah.
8 MR. SCHUDEL: Exhibit 101, your
9 discovery responses I think would correspond to
10 Exhibit 20. Do you wish to also withdraw that,
11 perhaps?
12 MS. BROWNING: Yeah, that's
13 fine.
14 MR. SCHUDEL: Okay.
15 COMMISSIONER LANDIS: Okay.
16 MR. SCHUDEL: With regard to
17 102 -- one second. With regard to 102, 103,
18 104, 105, 106, 7 and 8, no objections.
19 COMMISSIONER LANDIS: Very well.
20 Exhibits 102 through 108 will be admitted into
21 evidence, Ms. McGowan.
22 (Exhibit Nos. 102 through 108
23 are made a part of this record
24 and may be found separate.)
25 COMMISSIONER LANDIS: Okay. Any

1 other preliminary matters before we call the
2 first witness?
3 If not, then we'll start with the first
4 witness.
5 MR. WEINGARD: Sprint will call
6 Mr. Jim Burt, please.
7 JAMES R. BURT,
8 Called as a witness on behalf of Sprint,
9 being first duly sworn, was examined and
10 testified as follows:
11 COMMISSIONER LANDIS: Very well,
12 sir. If you'd be seated, state your name,
13 spell it, please, for the court reporter.
14 THE WITNESS: My name is James
15 R. Burt, B-U-R-T.
16 COMMISSIONER LANDIS: Thank you,
17 Mr. Burt. Just ask you, I think you probably
18 already have been advised by counsel, our
19 commission appreciates responsive answers to
20 the question and be terse to the point if you
21 would, please.
22 That goes for all the witnesses, today,
23 please be responsive to the questions that are
24 asked.
25 Thank you, Mr. Burt. Okay. You may

1 proceed.

2 MR. WEINGARD: Thank you,

3 Mr. Commissioner.

4 DIRECT EXAMINATION

5 BY MR. WEINGARD:

6 Q. Mr. Burt, are you the same James R. Burt

7 who has filed -- prefiled direct testimony and

8 rebuttal testimony in this case?

9 A. Yes, I am.

10 Q. Those exhibits are now designated

11 Exhibits 102 for your prefiled direct testimony

12 and 103 for your prefiled rebuttal testimony,

13 so you understand.

14 A. I understand.

15 Q. Have you reviewed Exhibits 102 and 103

16 in connection with preparing for your

17 examination today?

18 A. Yes, I have.

19 Q. Do you have any changes to your prefiled

20 direct testimony, Exhibit 102?

21 A. Yes, I do.

22 Q. Could you tell us what those changes

23 are?

24 A. Yes. I have three corrections to my

25 direct testimony.

1 Q. Okay. What's the first correction?
2 A. The first correction is on page 6, line
3 No. 137.
4 Q. What is the change, Mr. Burt?
5 A. Insert "Nebraska" right after
6 "New Jersey."
7 The second correction is on page 8, line
8 169, delete the word "interexchange" and insert
9 "local exchange".
10 Q. Okay. You had a third change.
11 A. Yes. On page 16, line 356 and 357,
12 delete the sentence, "A head end is the
13 originating point of the video signals in a
14 cable television system."
15 I have no more corrections.
16 Q. Okay. Other than the corrections, the
17 three corrections you've just identified, if I
18 asked you the questions set forth in Exhibits
19 102 and 103, would your answers be as they
20 appear in those exhibits, sir?
21 A. Yes, they would.
22 Q. Have you prepared a summary of your
23 testimony for use here today?
24 A. Yes, I have.
25 Q. Are you prepared to read that summary

1 into the record?
2 A. Yes, I am.
3 Q. Please do so.
4 A. Sprint seeks interconnection with SENTCO
5 in order to provide telecommunications services
6 to Time Warner Cable which will allow
7 facilities-based local voice competition to be
8 offered in competition with SENTCO.
9 First of all, I want to be crystal clear
10 on one thing. Sprint has never said that it
11 will be the retail service provider of the
12 proposed local voice services. Sprint has
13 never stated that it will be the entity
14 providing sales, billing, customer service and
15 installation to the end user subscribers.
16 Sprint has repeatedly stated that Time
17 Warner Cable will be the entity providing
18 sales, billing, customer service and
19 installation.
20 Sprint has never stated that the product
21 offering will be marketed or sold to end user
22 subscribers in a name or brand other than Time
23 Warner Cable.
24 Sprint has, therefore, never said that
25 the proposed services would be sold under

1 Sprint's name or brand.
2 Sprint's position is that the
3 Telecommunications Act of 1996 does not have
4 any requirement that before a carrier is
5 entitled to interconnection, that entity must
6 provide retail customer service or billing
7 functions or even that the services must be
8 marketed in that carrier's name or brand.
9 The act has contemplated various forms
10 of market entry. Consistent with its
11 understanding of the -- of that intent, Sprint
12 proposes to provide telecommunication services
13 to Time Warner Cable which will allow a
14 competitive form of facilities-based local
15 voice service to be offered to customers in
16 Nebraska.
17 Sprint believes it is entitled to
18 interconnection with SENTCO based on the
19 telecommunications services Sprint intends to
20 provide to Time Warner Cable which then permit
21 competitive services to be available to the
22 public, regardless of the facilities used.
23 These services include PSTN
24 interconnection, local switching, exchange
25 access, number administration and porting, toll

1 service, operator service and directory
2 assistance.
3 Time Warner Cable intends to provide the
4 sales, billing, customer service and
5 installation function as well as a connection
6 to the customer premises.
7 Sprint and Time Warner Cable are
8 combining resources to bring a competitive
9 local voice service to customers in SENTCO's
10 exchanges.
11 Both Sprint and Time Warner Cable bring
12 different resources and experience to the
13 table. Sprint's services are essential to this
14 business model. And without Sprint's services
15 or the services of another carrier similarly
16 situated to Sprint, the product could not be
17 offered to subscribers in the manner selected
18 by Sprint and Time Warner Cable.
19 It is Sprint's network that is directly
20 and physically interconnecting with SENTCO, not
21 Time Warner Cable's. Therefore, Sprint
22 believes it is entirely appropriate and
23 sensible, not to mention permissible, for
24 Sprint to seek interconnection with SENTCO.
25 In addition, Sprint's interconnection

1 services are offered indiscriminantly to the
2 class of users consisting of all entities who
3 desire Sprint services and who have comparable
4 last-mile facilities to the cable companies.
5 Accordingly --
6 COMMISSIONER LANDIS: Mr. Burt?
7 THE WITNESS: Yes.
8 COMMISSIONER LANDIS: Give me an
9 example of one of those entities. What would
10 that entity be?
11 THE WITNESS: Another entity
12 could be another cable company, for example.
13 COMMISSIONER LANDIS: In the
14 Falls City SENTCO --
15 THE WITNESS: If there were --
16 COMMISSIONER LANDIS: -- market-
17 place?
18 THE WITNESS: Another cable
19 company there, yes, it could be that. Or
20 another cable company anywhere else in
21 Nebraska, such as here in Lincoln.
22 COMMISSIONER LANDIS: Sure.
23 THE WITNESS: It could also be a
24 wireless provider. There are a number of
25 companies across the United States that are

1 beginning to provide wireless service to end
2 users, local service over wireless.
3 COMMISSIONER LANDIS: Okay.
4 THE WITNESS: Thank you.
5 COMMISSIONER LANDIS: Thank you.
6 A. Sprint is also entitled to reciprocal
7 compensation because Sprint will be performing
8 all of the switching and routing functions to
9 the PSTN. Therefore, the traffic will
10 originate and terminate on Sprint's network.
11 Local loop costs are not included in reciprocal
12 compensation.
13 Sprint believes one of the main purposes
14 of the Telecommunications Act of 1996 is to
15 open up local markets and promote healthy,
16 robust competition for local service.
17 It is Sprint's position that the
18 proposed product offering constitutes a new
19 form of competition that may provide a
20 meaningful choice to consumers, one that should
21 be determined by the market and is one that the
22 commission should embrace.
23 MR. WEINGARD: Thank you,
24 Mr. Burt. As your prefiled direct and your
25 rebuttal testimony, prefiled Exhibits 102 and

103 have been admitted into the record already.

I will tender this witness for cross-examination.

COMMISSIONER LANDIS: Okay. Mr. Schudel, Mr. Moorman, who's going to handle the cross?

MR. SCHUDEL: I'll handle the cross.

CROSS-EXAMINATION

BY MR. SCHUDEL:

Q. I want to address a couple of matters in your summary first, Mr. Burt, if I may.

I believe you just testified that it is Sprint's intention with Time Warner to bring resources to the Southeast Nebraska exchanges, plural, in order to provide the service that you've described as competitive. Isn't it the case that the only exchange in which Time Warner has last-mile resources is the Falls City exchange?

A. That's accurate, yes.

Q. So it would just be in the Falls City exchange that, to the best of your knowledge, the offering that you've described would be

1 made available if the commission were to
2 approve your company's position in this matter?
3 A. Yes. As far as SENTCO is concerned,
4 it's the Falls City exchange only. We also
5 provide the service here in Lincoln.
6 Q. Exactly. I'm confining my comments
7 today I think pretty much exclusively to the
8 southeast area.
9 You have stated that it is, in your
10 view, Sprint and Southeast that have a physical
11 interconnection of their respective networks.
12 Where is the point of interconnection to which
13 you refer?
14 A. Well, we currently don't have one
15 because we don't have an interconnection
16 contract yet. The point of interconnection
17 that has been discussed in the negotiations
18 would be at the SENTCO switch in Falls City.
19 Q. So I understand -- let me back up a
20 step.
21 Were you personally involved in any of
22 the negotiations between Sprint and SENTCO that
23 have resulted in the interconnection terms and
24 conditions in the document attached to the
25 petition filed in this case?

1 A. I was involved in some of those
2 negotiations, not all of them.
3 Q. As a result of your direct involvement,
4 do you have any recollection of any discussion
5 that addressed the intention by Sprint to
6 physically terminate its facilities to the
7 SENTCO switch in Falls City, Nebraska?
8 A. It is my understanding that because
9 Sprint has agreed to interconnect with SENTCO
10 directly rather than indirectly, we would do so
11 at the switch in Falls City.
12 Q. You've described, again, in your summary
13 a new form of competition -- I believe those
14 were your words -- for consumers in the
15 southeast area. Do you have any knowledge as
16 to whether -- if the service on the business
17 model you've described goes forward, whether
18 Time Warner will be offering a bundled service
19 offering consisting of video, long distance
20 voice and local voice?
21 A. I can't speak for Time Warner Cable, but
22 I believe they intend to provide a bundled
23 offering.
24 I also believe that they would provide a
25 stand-alone offering if that's what the

1 customer desired.
2 Q. You correct me if I'm mistaken in this,
3 but I believe I've seen in the Trade Press that
4 there have been discussions between Time Warner
5 and Sprint to resell Sprint's wireless service.
6 Do you have any understandings in that regard?
7 A. I'm aware of that. I'm not involved in
8 those discussions personally.
9 Q. Do you have any knowledge as to whether
10 the competitive offering by Time Warner, if it
11 goes forward in the Falls City exchange area,
12 would include wireless offering?
13 A. I don't know the answer to that.
14 Q. These are probably very -- a couple of
15 very elementary questions. But I just want to
16 be clear on a couple of things based upon your
17 summary.
18 Is it correct that all bills to
19 customers that would be served by Time Warner
20 under the business model as described in your
21 testimony would be in the name of Time Warner
22 Cable?
23 A. That is correct.
24 Q. And if a customer served by Time Warner
25 Cable had a dispute regarding billing or any

1 other element of service, is that -- is the
2 point of contact for the customer resolution of
3 that problem a Time Warner customer service
4 representative?
5 A. Yes, it would be.
6 MR. SCHUDEL: May I approach to
7 retrieve an exhibit?
8 COMMISSIONER LANDIS: Certainly,
9 Mr. Schudel.
10 Q. (BY MR. SCHUDEL) For the record,
11 Mr. Burt, I've laid before you what the
12 reporter has marked as Exhibit 12, which is a
13 copy of the Time Warner application in
14 application C-3228. And I've referred your
15 attention to Exhibit E of that document. Do
16 you have that document before you, sir?
17 A. Yes, I do.
18 Q. In the last -- excuse me. I need to get
19 my copy. In the last paragraph on page 1 of
20 Exhibit E, if you want to take a moment to scan
21 that.
22 My question is, first of all, whether
23 you see the reference to the soft switch device
24 in that -- in that paragraph?
25 A. I see one reference, yes. Well, two.

1 Q. Yeah, there -- there are I think you'd
2 agree with me at least two. And I haven't
3 counted. There may be more there.
4 A. Yeah.
5 Q. And if you could now -- because I'd like
6 to do a comparison. If you could go to what I
7 believe your counsel has identified as Exhibit
8 107, which was originally marked as JRB-2 to
9 your direct testimony.
10 Do you have that?
11 A. Yes, I have that.
12 Q. To your knowledge, is the cell or square
13 on the diagram marked as Exhibit 107, which
14 you've labeled, quote, TWC PBX KC, MO is that
15 the same device that Time Warner Cable
16 describes in Exhibit E to its application as
17 its soft switch?
18 A. Yes, it is.
19 Q. Staying with that Exhibit 107 if we
20 could for a moment, is it correct that a
21 interconnection point between Time Warner Cable
22 and Sprint's facilities is at the Sprint switch
23 in Kansas City, Missouri, which on Exhibit
24 107 -- I won't give it all, but I believe it's
25 marked end office switch; is that correct?

A. Are you referring to interconnection point in Exhibit E someplace? I don't see that.

Q. No. I was referring you to 107.

A. Okay.

Q. Just stay with 107, please.

A. Okay.

Q. And my question is, with regard to the point of interconnection between Time Warner Cable and Sprint, am I correct that that point of interconnection is at the box that you've entitled end office switch, and then you gave the CLLI code?

A. Well, I -- technically I wouldn't say that there's an interconnection point between Sprint and Time Warner Cable.

However, there is a circuit that runs between the Time Warner switch located in Kansas City to the Sprint end office switch located in Kansas City.

Q. And is that marked with your box identifying, quote, leased OC-12 facility?

A. Yes, it is.

Q. And is that leased from a third party?

A. I believe it is leased from a third

1 party, yes.
2 Q. Would it then be correct that with
3 regard to the point on this chart in Exhibit
4 107, that the point at which Time Warner's
5 owned facilities end is the box that I earlier
6 referred to that states TWC PBX KC, MO?
7 A. I'm sorry. Ask that again.
8 Q. I'm trying to ascertain whether the
9 point on this diagram 107 at which the Time
10 Warner facilities -- owned facilities end, is
11 it the box marked TWC PBX KC, MO?
12 A. No, I wouldn't necessarily say that. We
13 have to go a little bit further left in the
14 diagram where I show the Time Warner Cable,
15 what's labeled CMTS.
16 Q. Okay. I may not be making sense.
17 Starting at the left-hand side --
18 COMMISSIONER LANDIS: Would it
19 be helpful, Mr. Schudel, excuse me, if you
20 would go up, go to the witness and then perhaps
21 you can --
22 MR. SCHUDEL: Certainly.
23 COMMISSIONER LANDIS: Might make
24 it a little easier. Just showing what we're
25 trying to get to here.

Q. (BY MR. SCHUDEL) Yeah. If we start at the left-hand margin where the little telephone thing is.

A. Uh-huh.

Q. And if we work then to the right on your diagram 107, all I'm trying to ascertain is where do the Time Warner facilities, the ownership of facilities end?

A. The ownership of facilities?

Q. Yes.

A. I would say it ends at the Time Warner Cable CMTS.

Q. Then who owns the -- what it is marked TWC PBX KC, MO?

A. Time Warner Cable owns that device. But the CMTS is actually located in Lincoln.

Q. Right.

A. And then there is a facility between Lincoln and Kansas City that Time Warner Cable does not own that would also -- maybe this should have been labeled. That's also a leased facility.

And then Time Warner Cable has their soft switch located in Kansas City.

Q. Fair enough.

1 A. So they own piece parts.
2 Q. Fine. Stating my question another way,
3 is there any facility to the left-hand side of
4 the box in the middle marked end office switch
5 that Sprint owns? This is in the top diagram
6 of Exhibit 107.
7 A. When you say ownership, I believe this
8 leased facility, Sprint leases that facility
9 from Southwestern Bell.
10 Q. Okay.
11 A. So in a legal sense, I wouldn't
12 necessarily say that's ownership. But we
13 effectively own that facility.
14 Q. With that exception, is anything to the
15 left of the end office switch box owned or
16 leased by Sprint?
17 A. The facility between the Time Warner
18 Cable CMTS in Lincoln and the Time Warner Cable
19 location in Kansas City, I don't know who
20 actually leases that, if Sprint or Time Warner
21 Cable leases that. I don't know.
22 Q. Okay. With that caveat and with your
23 identification of the leased OC-12 facility,
24 does -- does Sprint own anything or lease
25 anything to the left of the box marked end

1 office switch?
2 A. Okay. I want to make sure I'm clear.
3 Between the facility -- the facility between
4 the Time Warner Cable box in Kansas City and
5 the Sprint end office switch in Kansas City,
6 it's my understanding that Sprint leases that
7 facility from Southwestern Bell.
8 The facility between the Time Warner
9 Cable box in Kansas City and the Time Warner
10 Cable CMTS in Lincoln, that is a leased
11 facility. I don't know who leases it, Sprint
12 or Time Warner Cable.
13 Q. Right. And, again, I'm not trying to be
14 repetitive. I'm just trying to get it clearly
15 established whether Sprint owns or leases, with
16 the exceptions that you've just stated,
17 anything left of the box marked end office
18 switch?
19 A. With the exceptions that I stated, no.
20 Q. Okay. Thank you. One element of the
21 business model that I don't think you've
22 addressed yet -- forgive me. You can lay that
23 aside. Is just want to make sure that I
24 understand how calls would be handled between
25 Sprint and Time Warner. In your business

1 model, am I correct that a call between two end
2 users that have Time Warner local service would
3 not be routed to the Sprint facilities in
4 Kansas City?
5 A. Any -- any call that does not go to the
6 public switch telephone network, such as the
7 example that you gave, one Time Warner Cable
8 subscriber to another, would stay within Time
9 Warner Cable switch.
10 Q. So would I be correct that calls between
11 two Time Warner end users will be terminated
12 solely by Time Warner on Time Warner
13 facilities?
14 A. No, because getting back to the
15 discussion that we just had, that call has to
16 get to the switch, their switch in Kansas City.
17 And I think we discussed we're not sure who
18 owns that piece. It's a leased facility.
19 Q. With the exception of leased facilities,
20 would it be true that all facilities involved
21 in the termination of a call between two Time
22 Warner end users would be Time Warner-owned --
23 maybe I should say owned or leased facilities?
24 A. I think the point you're trying to make
25 is a Time Warner Cable subscriber in Lincoln,

1 for example, to another subscriber in Lincoln
2 goes over the facilities to the switch in
3 Kansas City and then comes back to Lincoln.
4 Q. What you've described was all Time
5 Warner facilities, owned or leased?
6 A. Yeah, with that one exception, yes.
7 Q. Thank you.
8 MR. SCHUDEL: If I could have
9 just a moment to confer with opposing counsel.
10 COMMISSIONER LANDIS: Sure.
11 We'll take a couple minutes if anyone wants a
12 quick break.
13 (An off-the-record discussion was held.)
14 (Exhibit No. 7 marked for
15 identification.)
16 MR. SCHUDEL: Commissioner
17 Landis, in our informal conference, I mentioned
18 that I was going to be referencing what was
19 identified in my original exhibit designation
20 as Exhibit 7 which contains a portion of
21 confidential information.
22 I'm going to endeavor to proceed with
23 this without the need to clear the room. But
24 if we have to get to that, I'll pause, and then
25 I guess we'll just have to do that.

1 Q. (BY MR. SCHUDEL) Mr. Burt, if you would
2 kindly look at your direct testimony, I'm going
3 to make three references to that testimony.
4 Page 9, lines 2,006 -- excuse me, 206, 207,
5 would you agree with me that at those lines,
6 you testified, quote, "TWC does not have a
7 switch"? I'm going to stop there. But is that
8 your testimony today?
9 A. In the context of this response, I'm
10 saying they don't have a switch.
11 What I am intending to say is they do
12 not have an end office switch as the industry
13 would define an end office switch.
14 Q. Okay. But as your words appear there,
15 the words are, quote, "TWC does not have a
16 switch," close quote, with your explanation
17 that you just offered; correct?
18 A. That's what the words say, yes.
19 Q. Okay. Now, let's refer to page 16,
20 lines 370 and 371. Actually, 370 is the
21 primary reference. And am I correct there that
22 it is your testimony, quote, "The CMTS is
23 connected to a PBX-like switch owned by TWC",
24 end quote?
25 A. Yes, that is what it says.

1 Q. All right.
2 A. In the context of the testimony that is
3 written here, we used this term PBX-like
4 because the Time Warner Cable switch functions
5 like a PBX.
6 The example that we just talked about, a
7 Time Warner Cable customer calling another Time
8 Warner Cable staying within the confines of
9 that switch, that is effectively the way a PBX
10 would operate.
11 MR. SCHUDEL:, Commissioner
12 Landis, I'm trying to be as crisp on this as I
13 can.
14 COMMISSIONER LANDIS: I'm going
15 to ask just be responsive.
16 MR. SCHUDEL: I didn't ask
17 anything, and I would ask that part of his
18 answer be stricken.
19 COMMISSIONER LANDIS: Okay. I
20 think we've covered that. Just please answer
21 the question, if you would.
22 THE WITNESS: Okay.
23 Q. (BY MR. SCHUDEL) Now if you would kindly
24 refer to page/lines 19, 446 through 448. And
25 am I correct there that it continues to be your

1 testimony, quote, "Sprint owns the class V
2 switch that switches the residential
3 subscriber's voice calls," end of quote?
4 A. That is what that sentence says, yes.
5 Q. Now, at the hearing in C-3204, which was
6 Sprint's certification application, you'll
7 recall that I cross-examined you at that
8 hearing; correct?
9 A. I recall that, yes.
10 Q. And when I did so, I asked you to verify
11 responses to Sprint's responses to my client's
12 data request made in that case, didn't I?
13 A. I'll accept that.
14 Q. If you'd like, I can go to the
15 transcript, and we can pull that up.
16 COMMISSIONER LANDIS: He'll
17 accept that.
18 MR. SCHUDEL: Good.
19 Q. (BY MR. SCHUDEL) And you testified, in
20 response to my request whether you could verify
21 those responses, that Sprint's responses to
22 data requests, including those that have been
23 marked and I've laid before you as Exhibit 7,
24 were true and correct. Is that accurate?
25 A. I'll take your word for that.

1 Q. Well, let me -- I'm not trying to parse.
2 But I don't want to testify for you. I'd like
3 to be sure that you're comfortable with that
4 answer. And I'm more than happy to go to the
5 transcript and --
6 A. I think I said I agreed with what you
7 said.
8 Q. Very good. Thank you.
9 MR. SCHUDEL: Now, Commissioner
10 Landis, what I would like to do is refer to the
11 response on page 3 of Exhibit 7, copies of
12 which have been provided to each of the
13 commissioners. And I don't have to read that
14 section of Exhibit 7 into the record so we
15 don't have to clear the room.
16 I would simply ask whether that is true
17 and correct -- excuse me, whether that was true
18 and correct testimony and response on the date
19 that it was verified by this witness in 3204.
20 That's all I'm trying to get out of this
21 line of questioning.
22 COMMISSIONER LANDIS: And you're
23 asking the witness whether this is --
24 MR. SCHUDEL: Yes, sir, I am.
25 But because it's designated as confidential, I

1 don't want to read it.
2 COMMISSIONER LANDIS: Sure.
3 Take a moment and read it.
4 A. Okay. I've read it.
5 Q. (BY MR. SCHUDEL) And would you agree
6 with me that as part of your affirmation of the
7 truth and correctness of the responses to data
8 request in C-3204, which is inclusive of
9 Exhibit 7, that you did so verify at that time?
10 A. At that time I would -- I would say that
11 the terminology that was used here --
12 Q. Really, I'm just trying to get a yes or
13 no. Did you verify it at that time?
14 A. I would say, yes, I did.
15 Q. All right.
16 MR. SCHUDEL: I would offer
17 Exhibit 7 at this time, recognizing that you
18 had earlier declined to receive it in your
19 ruling on the motion in limine. And I offer it
20 as a prior inconsistent statement of -- on
21 behalf of Sprint. If the rules of evidence
22 were applicable, that would be under Nebraska
23 Statute 27-613 and also for the purposes of
24 impeachment of the direct testimony, which is
25 section 27-607.

1 COMMISSIONER BOYLE: Mr. Burt,
2 in response to the last question that you were
3 not allowed to finish your comment, I would
4 like to hear the rest of the comment.
5 THE WITNESS: Okay. I guess I'd
6 like to start with a little history of the
7 proceedings. When we started this process, I
8 don't think we realized we would run into the
9 resistance that we have run into. And terms
10 have been used that had we understood the
11 resistance and the way in which certain terms
12 have been interpreted, we probably should have
13 been a little bit more careful in some of the
14 wording that we used.
15 The testimony that I've provided in this
16 proceeding accurately describes the network
17 that's being utilized, both the Time Warner
18 Cable portion and the Sprint portion, to
19 provide service. And it's the industry's view
20 of the various elements of that network.
21 This particular response suggests things
22 that I would say today wouldn't -- I wouldn't
23 say these things today, given the context of
24 where this proceeding is going. But from an
25 industry perspective, a Sprint switch is the

1 end office switch.
2 Every carrier in the United States when
3 they terminate a call to a Time Warner Cable
4 customer, whether it's in SENTCO territory or
5 in Lincoln, will view the Sprint switch as the
6 end office switch.
7 COMMISSIONER BOYLE: Thank you.
8 COMMISSIONER LANDIS: Okay.
9 We've got an offer.
10 MS. KNUTSON: Commissioner, I'll
11 go ahead and let Sprint respond, but I just
12 wanted to be clear for the record that your
13 order in response to the motion in limine, I
14 know Paul said that it should be let in because
15 it's a prior -- prior inconsistent statement
16 that impeaches the witness, but the actual
17 ruling went to the fact that Exhibit No. 7
18 intends to -- is a confidential document that
19 was subject to a protective order in 3204, in
20 that Sprint case. And that was the basis for
21 your ruling. I just wanted to remind you of
22 that.
23 COMMISSIONER LANDIS: We're
24 going to reserve on this, in any event. But
25 for the record, if you want to make your

1 objections known, do that. We're going to
2 reserve. I'm not going to rule on this this
3 morning.
4 (Exhibit No. 7 is made a part of
5 this record and may be found in
6 Volume II.)
7 MR. WEINGARD: Thank you.
8 MS. KNUTSON: Thank you.
9 MR. WEINGARD: Mr. Commissioner
10 and Ms. Knutson, yes, Sprint objects to the
11 offering of this evidence into the record in
12 this proceeding on the grounds that it has
13 already been considered and excluded in the
14 motion in limine, as well as it was subject to
15 a confidential protective order which SENTCO
16 and SENTCO's counsel signed in the Sprint CLEC
17 certification proceeding.
18 I will remind the commission that SENTCO
19 participated in that proceeding, did not file
20 direct testimony in that proceeding and did not
21 come before the commission in that proceeding
22 to seek lifting of the protective order for
23 purposes of using it in any other proceeding.
24 So having agreed there to use it there
25 is attempting to do an end run around a

1 protective order. And on that basis we'd just
2 like to preserve the objection. I understand
3 you're going to rule at a later time.
4 COMMISSIONER LANDIS: That's
5 correct.
6 MR. SCHUDEL: And I need to put
7 in the record further comments for your
8 consideration.
9 First of all, let me just say I have
10 deciduously avoided, both in responses that we
11 filed to their motions and so forth, any words
12 like sandbagging, end running and so forth.
13 We're starting down a path here that you've
14 told us to stay away from. That's No. 1.
15 No. 2 and substantively, at the time the
16 protective order was entered in 3204, there was
17 no human way to understand or foresee that the
18 witness would be offering different testimony
19 today, which he, in response to Commissioner
20 Boyle's question, has just admitted to and
21 recited.
22 That in itself is indicative of the
23 probative value of this Exhibit No. 7 under
24 section 84-914(1) which guides this
25 commission's consideration of the evidence to

1 be received in this case.
2 The other thing I would simply remind
3 that is so obvious to every one of us is the
4 No. 1 interest in this proceeding and in any
5 proceeding before this commission is getting to
6 the truth. And you'll determine that. But you
7 need to have evidence before you from which you
8 can make your judgment as to what is the truth.
9 With regard to the protective order
10 aspect and the confidential aspects, SENTCO and
11 I personally and Mr. Moorman are entirely
12 willing to place this under seal. I've
13 conferred with counsel before I even gave it to
14 anybody here today. I have very carefully
15 guarded the confidentiality of this.
16 If you want, we'll put it in an
17 envelope, and it will remain there for your
18 ruling.
19 But as far as the policy to be served by
20 the protective order in 3204, we have a
21 protective order here. We have exactly the
22 same parties here. We're prepared to respect
23 that. And we're prepared to accept your order
24 to keep it under seal just as I placed the
25 confidential material on Exhibit 20 under seal.

1 COMMISSIONER LANDIS: Okay. I
2 think we have a complete record now on the
3 offer and the objection and staff's input. So
4 we are going to reserve on this. And we'll go
5 ahead and move ahead then with the witness.
6 And that's Exhibit 7.
7 MR. SCHUDEL: Seven. And we
8 have made an offer. And I understand you've
9 reserved.
10 COMMISSIONER LANDIS: Correct.
11 Exactly.
12 MR. WEINGARD: Just so the
13 record is clear, Mr. Schudel, the only people
14 that currently have a copy of the confidential
15 exhibit are the -- each of the commissioners
16 and the witness; i.e., the witness will hand
17 that back to the court reporter and counsel?
18 COMMISSIONER LANDIS: We'll hand
19 ours back.
20 MR. WEINGARD: Okay.
21 MR. SCHUDEL: Ms. Knutson, you
22 and myself.
23 MR. WEINGARD: Okay. Thank you.
24 Q. (BY MR. SCHUDEL) If I could refer you,
25 please, to page 17 of your direct testimony,

1 lines 394 through 404. Do you have that, sir?
2 A. Yes, I do.
3 Q. To confirm that I correctly understand
4 that testimony, it's your position that
5 Sprint's proposed business model with Time
6 Warner Cable is equivalent to plain old
7 telephone service or POTS; is that correct?
8 A. Functionally, yes.
9 Q. And in that vein -- I understood your
10 testimony to be saying that the business model
11 does not involve what's generally referred to
12 in the industry as VOIP, voice over internet
13 protocol, voice service?
14 A. In the context of which that term is
15 used in the industry, I would say that this
16 does not.
17 Q. On page 22 of your direct testimony,
18 lines 497 through 499, I just want to clarify a
19 point here. At the date that you filed this
20 testimony and indeed we filed our --
21 Ms. Sickel's direct testimony, is it correct
22 that Sprint did not have on file with the
23 commission an intrastate access tariff?
24 A. I can't answer that question.
25 Q. Okay. Let me just see if you are

1 knowledgeable of this. We have marked as
2 Exhibit 21 what is identified in the
3 commission's records as Sprint tariff No. 2,
4 which I understand from my brief review to be
5 an access tariff. Are you knowledgeable that
6 that tariff was filed on August 1, 2005, with
7 the commission?
8 A. I have some awareness that a tariff was
9 filed, yes.
10 Q. And would it be your understanding that
11 the effective date of that tariff filing is
12 intended to be ten days after filing, that is,
13 August 11th, 2005?
14 A. I don't know otherwise.
15 Q. Do you know why that tariff was filed at
16 the time it was on August 1, 2005?
17 A. Yes. Before Sprint can begin to bill
18 access to interexchange carriers, for example,
19 here in Lincoln, we would need to have a
20 tariff, intrastate tariff on file for the
21 intrastate access charges.
22 Q. Okay. So --
23 A. And without that tariff, we could not
24 bill those charges.
25 Q. Okay. Thank you.

1 MR. SCHUDEL: Mr. Commissioner,
2 could I have just a moment?
3 COMMISSIONER LANDIS: Sure. Why
4 don't we take a five-minute break here.
5 (11:24 a.m., to 11:30 recess.)
6 MR. SCHUDEL: I have no further
7 cross.
8 COMMISSIONER LANDIS: Questions
9 of the commissioners of this witness before we
10 go to redirect? If not --
11 COMMISSIONER BOYLE: One
12 question. If others asked to use the same
13 services, would you be offering those end
14 services in Nebraska as well?
15 THE WITNESS: Yes, we would.
16 COMMISSIONER BOYLE: All right.
17 Thank you.
18 COMMISSIONER LANDIS: Okay.
19 Sure, Mrs. Knutson.
20 MS. KNUTSON: Can I ask a couple
21 questions before redirect?
22 COMMISSIONER LANDIS: Of course.
23 CROSS-EXAMINATION
24 BY MS. KNUTSON:
25 Q. Okay. Mr. Burt, do you know of any

1 other companies that have business models
2 similar to the one that Sprint and Time Warner
3 have set up?
4 A. Yes. Time Warner Cable, in fact, is
5 doing virtually the same thing that Sprint is
6 doing with them with MCI in multiple states.
7 Q. Anyone else besides Time Warner?
8 A. Anyone else besides Time Warner? Yes.
9 Sprint has multiple contracts for this type of
10 service. I believe we've publicly announced
11 seven or so of those different cable companies
12 operating in 13 states across the
13 United States.
14 Q. Including U.S.A. Cable?
15 A. Including U.S.A. Cable, yes.
16 Q. Can you explain for me why you have
17 decided to have this arrangement and why Time
18 Warner isn't asking for interconnection along
19 with Sprint in this proceeding?
20 MR. WEINGARD: I'm going to
21 object only to the extent that the question is
22 calling for him to speculate on why Time Warner
23 doesn't do something or another. Subject to
24 that, I'm okay with him answering.
25 COMMISSIONER LANDIS: Well, you

1 got your objection on the record. We'll -- you
2 can answer if you have an answer. Do you have
3 any knowledge?
4 THE WITNESS: I can answer from
5 the Sprint perspective.
6 COMMISSIONER LANDIS: Sure.
7 THE WITNESS: Sprint is a CLEC
8 across the United States. We have
9 interconnection contracts with numerous ILECs.
10 We have interconnections with numerous ILECs.
11 This was an area of expertise and resource that
12 Sprint brought to the table that Time Warner
13 Cable did not have. And by utilizing that
14 resource and expertise, Time Warner Cable and
15 the other cable companies are able to get into
16 the market earlier rather than later if they
17 were to have to go out and do all of that
18 themselves. That's a very long process.
19 So that's the Sprint perspective on why.
20 In addition, we think it's -- from a
21 Telecommunications Act perspective, we think
22 it's perfectly consistent with the intent of
23 the act to bring various forms of competition.
24 And we feel that the services that Sprint is
25 providing qualifies it for interconnection. So

1 it's an acceptable model.
2 Q. Thank you. Mr. Burt, you stated in your
3 summary that you have no intent to provide
4 retail services in SENTCO's area. Was that
5 a -- did I accurately restate your summary?
6 A. At this time -- that issue came up in
7 our certification hearing as well when Sprint
8 was seeking statewide certification. We did
9 for two purposes, to support any market-entry
10 plans that Sprint itself has, but then also to
11 support the entry of Time Warner Cable.
12 I would say at this moment does Sprint
13 have an intent to provide retail service in
14 SENTCO territory? Not to my knowledge. But
15 Sprint is always evaluating various forms of
16 market entry.
17 Q. Okay. Thank you. Going back to your --
18 I believe it was your rebuttal testimony, page
19 4, I believe, lines 74 and 75, you state that
20 Sprint services will be available to all
21 customers in SENTCO's serving territory who
22 wish to purchase them. Are you there with me?
23 A. Yes.
24 Q. And I believe Mr. Schudel touched on it,
25 but this would mean all customers in the SENTCO

1 service territory to which Time Warner has the
2 last-mile facilities, meaning Falls City;
3 right? So this statement actually is not
4 correct because it won't be available to all
5 service -- all customers in SENTCO's service
6 territory?
7 A. It will be available to all customers in
8 the SENTCO service territory in which Time
9 Warner Cable has facilities, correct.
10 Q. Okay. I just wanted to get that
11 clarified for the record.
12 In response to a question that you were
13 asked by Mr. Schudel, going to your direct
14 testimony on page 18, you stated that the
15 proposed service is not a VOIP service in that
16 it doesn't utilize the public internet. And
17 I'll wait a second for you to get there.
18 A. What page is that?
19 Q. Page 18, lines 406 through 408.
20 A. Yes.
21 Q. So is it your testimony that a service
22 which utilizes packet switching and protocol
23 processing over a private network would not
24 be -- in your opinion, a service that utilizes
25 packetized switching over an internet

1 protocol-type arrangement over a private
2 network would not qualify as a VOIP service?
3 A. What I would first like to say, that
4 what Time Warner Cable is doing and the
5 protocols that they're using I think are
6 irrelevant to this proceeding.
7 Q. Okay.
8 A. This proceeding is about the
9 interconnection between Sprint and SENTCO.
10 Q. Uh-huh.
11 A. Which is not a -- an IP protocol.
12 With that said, this series of questions
13 and answers is designed to clear up some of the
14 confusion that -- I mean, it's throughout the
15 industry about what is VOIP. And we all hear
16 the horror stories about -- I won't mention
17 their names but certain voice over IP providers
18 who provide in my terminology internet
19 telephony services and their inability to
20 complete emergency calls. And we're trying to
21 distinguish the services being provided here
22 from those services.
23 And I've been involved in numerous
24 proceedings on voice over IP. I represent
25 Sprint from that perspective in regulatory

1 proceedings. And the confusion is unfortunate.
2 But VOIP and internet telephony typically
3 refers to voice communication that is utilizing
4 the public internet.
5 What we refer to here, even though it
6 uses the same protocol, is not that type of
7 service. This voice service never touches the
8 public internet whatsoever, again, even though
9 it may use the internet protocol.
10 Q. Okay. Thank you for expanding on that.
11 MS. KNUTSON: I have no further
12 questions.
13 COMMISSIONER LANDIS: I have
14 just a follow-up with what Mrs. Knutson was
15 asking about. On the statement in here that
16 you're going to serve all the customers in that
17 area, one, it's limited by only the customers
18 that Time Warner provides last mile to. And
19 then if it's like the Lincoln product, in
20 Lincoln you have to have the Time Warner
21 high-speed -- I think the Road Runner is what
22 it is to get the service. Is that also going
23 to be a qualifier in the Falls City area? If
24 you know.
25 THE WITNESS: Well, that's

1 probably a question for Time Warner Cable.
2 COMMISSIONER LANDIS: Okay. I
3 just -- if you know.
4 THE WITNESS: Well, yeah, no. I
5 believe that Time Warner Cable will provide a
6 stand-alone voice service. You do not have to
7 have their cable modem service in order for the
8 voice service to work.
9 COMMISSIONER LANDIS: Okay.
10 That's helpful.
11 And then, finally, so I understand, I'm
12 sure this is the case, Sprint's intention and
13 Time Warner's intention, to the extent you can
14 speak for Time Warner, you're basically serving
15 the city limits of Falls City where the cable
16 company --
17 THE WITNESS: Yeah, their
18 franchise territory, which I believe is the
19 city limits of Falls City. But that's probably
20 a question --
21 COMMISSIONER LANDIS: Again,
22 that's Time Warner. And I understand you
23 can't --
24 THE WITNESS: -- that's a Time
25 Warner question.

1 COMMISSIONER LANDIS: But it
2 doesn't -- as far as you know, it doesn't
3 extend beyond the city limits? It doesn't get
4 out to the countryside, as far as you know?
5 THE WITNESS: Their franchise
6 territory.
7 COMMISSIONER LANDIS: Sure.
8 Fair enough.
9 You going to handle the redirect?
10 MR. WEINGARD: Yes, I am.
11 COMMISSIONER LANDIS: Okay.
12 Very well.
13 MR. WEINGARD: Thank you,
14 Mr. Commissioner.
15 REDIRECT EXAMINATION
16 BY MR. WEINGARD:
17 Q. Mr. Burt, just while we're on this
18 point, sticking with the issue of the VOIP and
19 the internet telephony, just to be clear, I
20 think there was some testimony on the
21 cross-examination of how a call would be
22 handled from a Time Warner customer to another
23 Time Warner customer. Do you recall that?
24 A. Yes, I do.
25 Q. And is it your understanding that the

1 interconnection agreement, the proposed
2 interconnection agreement between Sprint and
3 SENTCO is in any way related to a call that
4 would be routed from a Time Warner customer to
5 a Time Warner customer?
6 A. No, it is not. This proceeding has
7 nothing to do with the calls handled -- the
8 example that you provided.
9 Q. Okay. And why is that? Can you explain
10 that to the commission, please?
11 A. The calls that are relative to this
12 proceeding are calls that go between Sprint's
13 end office switch and in this case SENTCO's end
14 office switch in Falls City, only those calls.
15 That is the only purpose for seeking
16 interconnection.
17 The calls as described will not go over
18 that network in any way. So they're irrelevant
19 to this proceeding.
20 Q. And just so we're clear again, the
21 network that we're talking about or at least
22 the terminology that Sprint's used in the
23 testimony when it refers to voice calls
24 originated or terminated between a Time Warner
25 customer and in this proceeding a customer that

1 would be served by SENTCO, is the public switch
2 telephone network? Is that what --
3 A. Could you ask that again, please? I'm
4 sorry.
5 Q. When you refer to voice calls being
6 routed over the network that's relevant in this
7 case, I just want to be clear, is that what
8 you're referring to as the public switch
9 telephone network?
10 A. Yes, it is.
11 Q. Okay. Mr. Schudel also asked you some
12 questions I think early on regarding your
13 summary statement about the point of
14 interconnection. Do you recall that?
15 A. Yes.
16 Q. There was some discussion about whether
17 or not you were personally present with respect
18 to conversations that may have occurred between
19 SENTCO and Sprint about where the point of
20 interconnection was going to be located, if, in
21 fact, Sprint got approval of the
22 interconnection agreement. Do you recall that?
23 A. Yes, I do.
24 Q. Do you have -- can you explain to the
25 commission -- and I think you testified that

1 you have an understanding that the point of
2 interconnection in this case would be SENTCO's
3 end office or central office?
4 A. That is correct, yes.
5 Q. Okay. And can you just explain to the
6 commissioners what that understanding is based
7 on? Where do you get that understanding?
8 A. The terms that we have negotiated with
9 SENTCO call for Sprint to directly interconnect
10 with SENTCO. From our perspective what that
11 means is that we will purchase a circuit, if
12 you want to call it that, that terminates on
13 their network at their end office switch in
14 Falls City.
15 Q. Okay. And the basis of your
16 understanding is just your role as a director
17 for the company, being informed in
18 communications with Sprint about that issue?
19 A. Yes. That is correct. I mentioned I
20 had some involvement in the negotiations but
21 not entirely. That is an issue that is many
22 times a disputed issue between CLECs and ILECs,
23 where is that point of interconnection, who
24 pays for what portion of that. And generally a
25 CLEC will argue that it should not have to

1 directly interconnect or pay for a facility all
2 the way out to the ILEC's end office.
3 In this instance, we have agreed to do
4 so, even though that's the highest cost form of
5 interconnection for Sprint, but, on the other
6 side, it's the least cost form of
7 interconnection for Southeast Nebraska
8 Telephone.
9 Q. So if I'm understanding that testimony
10 about the point of interconnection correctly,
11 does that mean that if, in fact, approval was
12 granted and the point of interconnection was
13 located at the SENTCO central office, that
14 SENTCO would not bear the responsibility for
15 hauling that traffic all the way to the Sprint
16 switch in Kansas City?
17 A. That is correct. Their responsibility
18 would end at their switch for calls they're
19 sending to Sprint.
20 Q. At the POI, what's called the POI, POI?
21 A. At the, yes, point of interconnection,
22 yes.
23 Q. Mr. Schudel also asked you some
24 questions, just to clarify, whether the bills
25 that would be going out to end user subscribers

1 of the Time Warner service would be in Time
2 Warner's name. Do you recall that?
3 A. Yes.
4 Q. And there was a question -- and forgive
5 me, I'm paraphrasing -- that if the customer
6 had a service issue or any other element of
7 service, a problem, an issue, the initial point
8 of contact would be Time Warner Cable. Do you
9 recall that?
10 A. I recall that, yes.
11 Q. Is it your testimony that if there was a
12 problem with, say, a Sprint facility arising
13 out of the interconnection between Sprint and
14 SENTCO, that Sprint would be somehow insulated
15 from having to respond to a complaint about
16 that problem?
17 A. No. It -- Sprint would be -- Sprint as
18 the interconnecting carrier is fully
19 responsible for that facility, maintaining that
20 facility. We're certainly responsible for
21 abiding by the terms and conditions of the
22 interconnection contract.
23 So just because the end user who maybe
24 has a problem calls Time Warner Cable first, it
25 doesn't relieve Sprint of its obligations under

1 the interconnection contract or any other
2 obligations that Sprint may have.
3 Q. Right. So long as we're clear that with
4 respect to the things you identified in your
5 summary, what we're loosely referring to as the
6 retail pieces -- the billing, the customer
7 care, the point of contact -- would always be
8 Time Warner Cable on those issues; correct?
9 A. From an end user, yes, it would be to
10 Time Warner.
11 Q. There was a question asked of you with
12 respect to the Time Warner, Time Warner call,
13 about whether that would be switched and
14 terminated solely by Time Warner. Do you
15 recall that?
16 A. Yes, I do.
17 Q. Is it your understanding that the term
18 switched or terminated has relevance with
19 respect to the kind of IP call that would be
20 placed in this proposed service between a Time
21 Warner customer to a Time Warner customer?
22 A. It really doesn't. I think, again, some
23 of the terms are used somewhat generically.
24 And calls I think from a regular POI
25 perspective, those calls are irrelevant to how

1 the term termination is used.
2 Q. There was some questioning by
3 Mr. Schudel as well with respect to Sprint's
4 intrastate access tariff. Does that tariff
5 have any relevance, as far as you are
6 concerned, to the issues in the interconnection
7 proceeding?
8 A. No, it does not.
9 Q. And is that because access has to do
10 with interexchange or what's commonly referred
11 to as long-distance service?
12 A. That is correct.
13 Q. That's beyond the scope of the
14 interconnection agreement?
15 A. Yes, it is.
16 Q. I think Ms. Knutson asked you a question
17 about why is it that Time Warner did not seek
18 interconnection I guess essentially in its own
19 name. Do you recall that?
20 A. Uh-huh.
21 Q. Do you know as you're sitting here today
22 whether it's Time Warner's legal position that
23 they are required or not required to seek
24 interconnection in their own name? Or is that
25 beyond the scope of what you know?

1 A. I believe Time Warner Cable's position
2 is that it is not their legal obligation to
3 seek interconnection.
4 Q. And your understanding of that position
5 comes from where?
6 A. Discussions with Time Warner Cable.
7 MR. SCHUDEL: I'm going to
8 object to further on this line because of the
9 obvious hearsay nature. There was an
10 earlier -- what shall I say? Admonishment with
11 regard to the scope of this witness' knowledge.
12 And just for the record, I'll move that
13 his last answer, which was testimony on behalf
14 of Time Warner, be stricken.
15 MR. WEINGARD: My question just
16 asked the foundational question whether he was
17 aware of what their legal position was to
18 establish essentially that that is beyond the
19 scope of --
20 COMMISSIONER LANDIS: We'll
21 leave it in the record. We'll leave it in the
22 record. I think we need to move off of that
23 point because now he's testifying on behalf of
24 Time Warner. And what's good for the goose is
25 good for the gander.

1 MR. WEINGARD: Okay. I think I
2 will shift my redirect now as we've discussed
3 in the prehearing conference we had back in the
4 library, that I am -- in the interest of
5 getting Mr. Burt on and off the stand only one
6 time, I'm able to ask him redirect questions
7 that stem from the testimony filed by
8 Mr. Watkins in rebuttal to this witness. So
9 that is where I will go next, with your
10 permission.
11 COMMISSIONER LANDIS: That's
12 fine. We previously discussed this.
13 Q. (BY MR. WEINGARD) Mr. Burt, have you
14 read the testimony filed in this case by
15 Mr. Watkins?
16 A. Yes, I have.
17 Q. Do you agree with Mr. Watkins'
18 conclusions that Sprint is changing its
19 testimony from that which it offered in prior
20 proceedings?
21 A. No, I do not.
22 Q. Can you explain to the commission why
23 you believe -- you disagree with that
24 testimony?
25 A. Well, there are multiple instances, I

1 think one of which is who is the retail
2 provider, is it Sprint or is it Time Warner
3 Cable. And we have made it perfectly clear
4 that it is Time Warner Cable that is providing
5 the retail service in this instance, not
6 Sprint.
7 Q. Okay. Are you familiar with the Time
8 Warner CLEC certification order? I believe
9 that's in proceeding C-3228.
10 A. I'm aware of it, yes.
11 Q. I'm sorry, say that again.
12 A. I'm aware of it, yes.
13 Q. In your opinion, does that order direct
14 Sprint to do anything, the Time Warner CLEC
15 certification order, in proceeding C-3228?
16 A. No, it does not.
17 Q. I assume you're also familiar with the
18 order of this commission in the Sprint CLEC
19 certification which is proceeding C-322 -- 204?
20 Sorry.
21 A. Yes, I am.
22 Q. Is it your testimony in response to
23 Mr. Watkins that that Sprint CLEC certification
24 order in some way required Sprint to file a
25 tariff for the so-called, what they referred to

1 as the enabler services or the wholesale
2 services?
3 A. The order did not require Sprint to file
4 a tariff.
5 Q. Mr. Burt, there was a lot of discussion
6 in the prefiled testimony about switching and
7 termination and which carrier was doing the
8 termination, whether it was Sprint or Time
9 Warner Cable. Do you recall that?
10 A. Yes, I do.
11 Q. Do you agree with Mr. Watkins' testimony
12 which appears generally I think at pages 11
13 through 18, that Sprint would not be the
14 carrier performing termination or origination
15 of voice calls placed that are subject matter
16 of this case?
17 A. No, I do not.
18 Q. Can you explain to the commission why
19 you do not agree with that testimony that
20 Sprint is not going to be the party terminating
21 or originating voice traffic?
22 A. Yes. For the purposes of Mr. Watkins'
23 testimony, he was referring to reciprocal
24 compensation. And when we talk about
25 reciprocal compensation, we have to be careful

1 with the terms we use.
2 Termination is one such term. And the
3 rules say that the carrier whose network a call
4 terminates on is due payment or reciprocal
5 compensation for the termination of that call.
6 The calls that are subject to reciprocal
7 compensation terminate on Sprint's switch, that
8 is the end office where calls terminate.
9 Therefore, in the context of reciprocal
10 compensation, termination is on Sprint's
11 network or Sprint's end office switch.
12 Q. There was some discussion, including
13 based on that potential exhibit from the other
14 proceeding, I think it was Exhibit No. 7, about
15 the functioning of the Time Warner I think
16 what's being referred to as the soft switch.
17 Do you recall that testimony?
18 A. Yes.
19 Q. Is it your position today that that soft
20 switch is actually doing a switching function
21 with respect to the termination or origination
22 of voice traffic to the PSTN?
23 A. No, it is not.
24 MR. SCHUDEL: I -- excuse me,
25 please. If I understood the question -- and

1 maybe I need to have clarification -- this
2 question is directed at what is the function of
3 the Time Warner equipment called a soft switch.
4 And I think we've already established that this
5 man is not a Time Warner witness. He's not
6 here to speak on behalf of Time Warner. I
7 haven't heard any qualification that he is
8 familiar with those functions.
9 So I would object to this being not a
10 question for which he's competent to respond.
11 MR. WEINGARD: Well --
12 COMMISSIONER LANDIS: I think
13 there may be a foundation question, too, you
14 may want to ask.
15 MR. WEINGARD: Let me say this
16 in response to that, this witness has been
17 examined on a confidential exhibit that related
18 to his characterization of the type of switch
19 that Time Warner had from the other CLEC
20 certification proceeding. And in the event
21 that that testimony comes in to evidence in
22 this proceeding, he's unable to explain what he
23 knows about the characterization that he uses,
24 his words, of the capability of that switch.
25 MR. SCHUDEL: He's been asked to

1 reaffirm that his confidential testimony -- or,
2 I mean, the confidential answer to the data
3 request was true and correct. That's it. No
4 more. No less.
5 COMMISSIONER LANDIS: Okay. I'm
6 going to rule that you may answer the question.
7 If you know your own personal knowledge the
8 answer to that question, you can go ahead and
9 answer. We've already asked you some questions
10 respecting Time Warner.
11 Would you ask the question again,
12 Mr. Weingard?
13 Q. (BY MR. WEINGARD) The question is, how
14 do you respond to Mr. Watkins' testimony and
15 the questions you were asked before on whether
16 or not in your opinion the soft switch of Time
17 Warner was performing a termination or
18 origination switching function when the calls
19 are being routed to and from the public service
20 telephone network?
21 MR. SCHUDEL: And I have
22 continuing objection to this.
23 COMMISSIONER LANDIS: Noted.
24 Answer the question if you -- if you know.
25 THE WITNESS: Yes, I know.

1 A. Their switch is not the termination
2 point. Again, this issue gets back to
3 reciprocal compensation and the definitions
4 that surround that compensation between
5 carriers.
6 And the switching, the end office
7 switching is one of those cost elements.
8 The Time Warner Cable switch is a part
9 of the loop, and the loop is specifically not a
10 part of the reciprocal compensation that a
11 terminating carrier such as Sprint receives.
12 Q. (BY MR. WEINGARD) Okay. Based on your
13 experience in the telecom industry, do you
14 believe Mr. Watkins failed to discuss any other
15 factors that the industry looks at to determine
16 what constitutes an end office switch?
17 A. Yes. Several.
18 Q. Can you explain what those are for the
19 commission, please?
20 A. Okay. First, the industry utilizes a
21 database. It's called the local exchange
22 routing guide or LERG for short. That database
23 identifies end offices. Every end office in
24 the country is identified in that switch to the
25 entire industry.

1 Sprint's switch is identified in LERG as
2 the end office switch for the services that are
3 being provided, not yet in SENTCO territory but
4 for the services being provided here in
5 Lincoln.
6 There are a number of things identified
7 in that database. One is the CLLI code or --
8 that's an acronym for common language location
9 identifier. Sprint's switch has a CLLI code.
10 As a matter of fact, I've provided that on the
11 exhibits, JRB-1 and 2. And if we looked at
12 that, you would see it's an 11-digit
13 alphanumeric.
14 You can figure some of that out just by
15 looking at it. It shows the location of the
16 switch as being Kansas City, Missouri. The
17 last three digits of that code, PSO, by
18 definition within the CLLI job aid that
19 designates that switch as a packet end office.
20 So by definition of the CLLI code which
21 is in LERG, Sprint has an end office switch.
22 Q. Mr. Burt, let me just cut in here
23 because I think I can break this up in a way
24 that might be faster and more easily
25 understandable.

1 A. Okay.
2 Q. With respect to the local routing number
3 you talked about that's contained in LERG, does
4 the Sprint switch have that number?
5 A. Yes, it does.
6 Q. Okay. Do you know if the soft switch
7 for Time Warner has that number?
8 A. It does not have a local routing number.
9 Q. With respect to the CLLI code that you
10 just talked about, the identifier basically,
11 was it your testimony that the Sprint switch
12 has a CLLI code?
13 A. Yes.
14 Q. And do you know if Time Warner soft
15 switch located in Kansas City has a CLLI code?
16 A. No, it does not.
17 Q. Are there any other factors that the
18 industry looks at that you believe Mr. Watkins
19 did not address that help identify in the
20 industry usage whether an end office is, in
21 fact, an end office?
22 A. Yes, there are.
23 Q. Can you tell me what another one of
24 those is?
25 A. I'll discuss one more. The telephone

1 numbers that are provided to end users are on
2 the Sprint switch. It's referred to as a
3 central office code which represents the -- we
4 call it the NXX or the first three digits of a
5 seven-digit telephone number. Those reside on
6 the Sprint switch.
7 So any call made from any other carrier
8 will route those calls directly or indirectly
9 to Sprint's switch.
10 If a number, for example, in Lincoln
11 that we have ported between Alltel to Sprint,
12 the local number portability database will be
13 looked at. And it will tell the carrier that
14 is sending that call to send that call to
15 Sprint's switch.
16 Q. Okay. Is that information -- do you
17 know if that information is located within the
18 Time Warner soft switch?
19 A. It is not located within the Time Warner
20 Cable soft switch.
21 Q. Quickly -- because I know we've been
22 cautioned to move this along -- are there any
23 other factors, just describe them to me, that
24 you believe Mr. Watkins did not address in the
25 testimony that help identify whether something

1 is a end office switch in the industry?
2 A. Yes. Another example would be when
3 Sprint is sending a call to another carrier, as
4 the originating end office switch, Sprint
5 switch, we would have to do -- in Lincoln, we
6 would look at the local number portability
7 database. We would do what's called a query,
8 LNP query to this database to determine where
9 that call or which carrier that call should be
10 routed. That is a function that Sprint's
11 switch performs. Time Warner Cable switch does
12 not perform that function.
13 In essence, without the functionality
14 that Sprint switch is performing, some of which
15 I mentioned -- and there are others -- calls
16 would not go anywhere, and calls would not get
17 terminated to Time Warner Cable end users if it
18 were not for the functionality that only
19 Sprint's switch provides.
20 Q. Anything else?
21 A. Since we're -- yes. 911 trunks, for
22 example.
23 MR. SCHUDEL: Excuse me. Excuse
24 me. I want to object. Anything else is not a
25 proper query.

1 COMMISSIONER LANDIS: I think
2 that's a fair objection.
3 MR. WEINGARD: I'll withdraw
4 that question.
5 COMMISSIONER LANDIS: I'm sure
6 Mr. Weingard can be a little more specific than
7 that.
8 MR. WEINGARD: I'll wish that I
9 was when I read the transcript back.
10 Q. (BY MR. WEINGARD) But are there any
11 other factors that you contend Mr. Watkins did
12 not address in response to your testimony that
13 the industry looks at to help determine in
14 industry usage whether an end office switch is
15 actually a switch -- a -- functioning as an end
16 office switch?
17 And I don't -- go ahead.
18 A. Yes. Another example would be calls to
19 911. When a Time Warner Cable subscriber makes
20 a 911 call, that call goes through Sprint's end
21 office switch, and we determine, based on the
22 address of the originator of that call, which
23 911 authority or PSAP or which selective router
24 we should route that call so that it's
25 delivered to the correct 911 operator. That

1 is, again, a function performed by Sprint
2 switch, not Time Warner Cable switch.
3 Q. Okay. Moving right along, with respect
4 to the questions you were asked and the
5 testimony Mr. Watkins presented in rebuttal to
6 you, attacking your use of the term PBX-like
7 switch, do you recall that?
8 A. Yes.
9 Q. For the record, I show that testimony
10 occurring in Mr. Watkins' testimony, which I
11 think will be Exhibit 22, at page 16, line 11
12 and also at page 18, 1.
13 But since you said you were familiar
14 with that testimony, do you agree with
15 Mr. Watkins that the use of the term PBX-like
16 switch is misleading and accurate or wrong?
17 A. No, it isn't. That's a Sprint term.
18 And I mentioned it earlier, their device is
19 functioning like a PBX.
20 I'm sure that there's a PBX serving this
21 building. And when an employee of the
22 commission calls another employee of the
23 commission, the PBX makes that connection. It
24 doesn't go out over the public switch telephone
25 network. That is, in effect, what the Time

1 Warner Cable device is doing.
2 Q. Just so we're clear, you're not
3 suggesting the term PBX is a Sprint term? You
4 said a Sprint term.
5 A. I -- what I said was PBX-like.
6 Q. Okay.
7 A. Because of the functionality that the
8 device performs.
9 Q. Okay. Do you recall Mr. Watkins'
10 prefiled rebuttal testimony at, for the record,
11 page 10, line 16 through 23 and page 11, 1
12 through 4, that responds to a point you made in
13 your prefiled direct testimony about Sprint's
14 view that this current proposed business model
15 would permit either Sprint or Time Warner to
16 enter into the market quicker -- more quickly,
17 rather, than if either were forced to enter the
18 market, quote, alone? Do you recall that?
19 A. Yes.
20 Q. Okay. And Mr. Watkins' response to that
21 testimony was, well, that's not true because
22 Sprint -- Time Warner Cable, rather, could
23 enter into a private contract to provide the
24 various network elements that it can't provide
25 on its own. Do you recall that?

1 A. Yes.
2 Q. Okay. Can you just tell the commission
3 what you meant when you used the term alone in
4 your prefiled direct testimony?
5 A. We're describing a business model that
6 Sprint and Time Warner Cable have chosen,
7 combining our resources to provide an end user
8 service.
9 By alone, if Sprint were to enter
10 Falls City, Nebraska, as a facilities-based
11 local service provider, we would have to build
12 out all of the outside plant, facilities in
13 order to do that. That would obviously take a
14 tremendous amount of time and resource.
15 Likewise, if Time Warner Cable were to
16 try to do this alone, they themselves would
17 have to, in effect, build a telephone company,
18 which is not an easy undertaking. Therefore,
19 they have come to Sprint for the expertise and
20 resources so that they didn't have to do that.
21 Therefore, they can get into the market sooner
22 rather than later.
23 Q. Mr. Watkins quoted some testimony in his
24 prefiled rebuttal testimony that came from your
25 testimony in the Sprint CLEC certification

1 proceeding. And that's at page 15, lines 1
2 through 8 of his testimony.
3 For the sake of the record, I will read
4 in to you what it is that I am referring to.
5 In Mr. Watkins' testimony he cites, "Question:
6 As an enabler, comma, to use your term, comma,
7 will Sprint offer telecommunications for a fee
8 to the general public? Answer:" -- which is
9 your answer -- "as an enabler -- I want to make
10 sure I understand what you -- when I say
11 enabler, that is describing the wholesale
12 relationship we have with the cable company."
13 And then in italics, it goes on, "In
14 that instance we are not providing a service to
15 an end user. The cable company provides the
16 service."
17 And the citation there is the transcript
18 from the Sprint CLEC certification hearing at
19 page 73, lines 3 through 9.
20 You read that testimony that Mr. Watkins
21 filed?
22 A. Yes.
23 Q. When you -- do you -- can you explain
24 what you meant when you said we are not
25 providing a service to an end user within the

1 context of that proceeding?
2 A. We are not providing a service directly
3 to an end user. The retail service, that's
4 being provided by Time Warner Cable.
5 But consistent with the definition --
6 some of the definitions, we are effectively
7 making services available to the public.
8 Q. Just so we're clear, the definitions
9 you're referring to are contained where?
10 A. In the -- it's in the Telcom Act. It's
11 in the Code of Federal Regulations.
12 Q. So are you clarifying that you are not
13 responding to effectively available to the
14 public through making it available through Time
15 Warner when you responded there?
16 A. Correct.
17 Q. Okay.
18 MR. WEINGARD: That's all the
19 questions I have on redirect, Mr. Commissioner.
20 COMMISSIONER LANDIS: Okay. I
21 have -- Shana, do you have any questions --
22 MS. KNUTSON: No.
23 COMMISSIONER LANDIS: -- of
24 Mr. Burt?
25 Anne?

We talked a little bit, you were asked a little bit about the capability of the respective switches, Time Warner and your -- Sprint switch and who provides what. Would you agree with me that at least with -- for the purposes of this hearing that we're having today, that the -- really, the underlying issue is the relationship of the respective parties, Time Warner or Sprint, the customer, SENTCO, as opposed to what switch will do what? Is that a fair conclusion for me to --

THE WITNESS: I think that's -- I think it's very fair. The arbitration, there are two issues in the arbitration.

COMMISSIONER LANDIS: Correct.

THE WITNESS: You're addressing the first issue, and that is does Sprint have the right to interconnect in this particular business model. All of the discussion about the switch relates to another issue which really depends on the first issue.

If it's determined that Sprint has the right to interconnect, in my opinion, the other issue is moot, which, again, relates to whose device does what.

COMMISSIONER LANDIS: How -- if you know, again, Mr. Burt, how is Sprint harmed or adversely affected by having -- and I want you to testify on behalf of Sprint -- by having Time Warner do the interconnection? I know it's a business model, a business plan that you're doing around the countryside. But is Sprint adversely affected by having Time Warner be the party at the table doing the interconnection?

THE WITNESS: I'd like to answer that two ways.

COMMISSIONER LANDIS: If you would, please, because I'm having trouble understanding why --

THE WITNESS: Yeah, sure.

COMMISSIONER LANDIS: -- it makes a difference between you or Time Warner being at the table.

THE WITNESS: Yeah. Believe me, we've had a lot of discussion about that.

COMMISSIONER LANDIS: Okay.

THE WITNESS: In the first instance, it is Sprint's switch. It is Sprint's network that is interconnecting with

1 SENTCO's network.
2 The party to the contract that
3 determines how that is done needs to be Sprint.
4 The traffic is going between Sprint and SENTCO.
5 Sprint should have the contract that governs
6 that traffic.
7 The other reason is because, as I
8 mentioned, Sprint is always evaluating ways to
9 get into the market. And as I've stated in our
10 certification hearing and here, these
11 interconnection facilities, although initially
12 will carry the traffic from Time Warner Cable
13 end users, Sprint may want to use those
14 facilities for our own retail traffic.
15 But the main issue is it's Sprint's
16 network, it's Sprint's end office switch. It
17 would seem improper to me that if Sprint's
18 network is doing the interconnecting, that some
19 other party would have the contract that
20 governs how my switch, how Sprint's switch
21 interconnects.
22 COMMISSIONER LANDIS: Even with
23 an agency relationship of whatever, that just
24 would not be the proper person at the
25 negotiating table?

1 THE WITNESS: No, no.
2 COMMISSIONER LANDIS: Okay.
3 THE WITNESS: Again, it's our
4 network.
5 COMMISSIONER LANDIS: Finally,
6 you've testified on what the intent of the act
7 is. I'm having difficulty figuring out when,
8 if ever, the issue of rural exemption arises in
9 this kind of a matter here.
10 We have a -- we have a BFR. That
11 triggers -- I just -- does that issue ever come
12 up at this juncture now that Sprint and you
13 folks or -- you're in negotiations for a
14 interconnect. We have Time Warner. Does it
15 come up or doesn't it?
16 THE WITNESS: Well, it does come
17 up. It is not an issue here --
18 COMMISSIONER LANDIS: Right.
19 THE WITNESS: -- because we have
20 not requested interconnection under -- I'm
21 going to start quoting some sections of the
22 connection -- or the Telcom Act.
23 COMMISSIONER LANDIS: That's
24 fine.
25 THE WITNESS: We have not

1 requested interconnection under section 251(c).
2 And subject to check, I believe that SENTCO has
3 admitted that we are not doing so.
4 COMMISSIONER LANDIS: Okay.
5 THE WITNESS: Therefore, not
6 challenging that rural exemption issue, which
7 is why it's not a part of this proceeding.
8 If we were, then there would had to have
9 been -- well, assuming SENTCO would have waived
10 the rural exemption right that they have, then
11 this commission would have had to have had a
12 proceeding to determine whether or not they
13 have the rural exemption, and that would have
14 been triggered with what you termed the bona
15 fide request.
16 And, again, technically, because Sprint
17 didn't ask for 251(c) interconnection, there
18 was no, quote, unquote, bona fide request.
19 It's a request for interconnection, not
20 challenging rural exemption.
21 COMMISSIONER LANDIS: Help me
22 with this.
23 THE WITNESS: Okay.
24 COMMISSIONER LANDIS: If you've
25 not asked for interconnection connection,

1 what's been the purpose of all these
2 negotiations? To what end, if it is an
3 interconnection --
4 THE WITNESS: Good question. I
5 really didn't finish that. We have requested
6 interconnection pursuant to 251(a) and
7 251(b)(5), neither of which challenged the
8 rural exemption.
9 COMMISSIONER LANDIS: Or
10 triggered the rural --
11 THE WITNESS: Or triggers the
12 rural exemption, which is why we have not had a
13 rural exemption proceeding.
14 COMMISSIONER LANDIS: Okay.
15 It's more of a termination of traffic and
16 compensation issues?
17 THE WITNESS: It's -- yeah,
18 251(a) addresses the physical linking of the
19 networks. We obviously have to have that.
20 251(b)(5) addresses reciprocal
21 compensation, how we charge each other for the
22 use of our network.
23 COMMISSIONER LANDIS: Okay.
24 That's --
25 THE WITNESS: So it's terms and

1 conditions.

2 COMMISSIONER LANDIS: That helps

3 me to kind of put this in context.

4 THE WITNESS: Sure.

5 COMMISSIONER LANDIS: Other

6 questions for Mr. Burt? We'll give you one

7 opportunity briefly for recross.

8 MR. SCHUDEL: Just brief.

9 COMMISSIONER LANDIS: Just a few

10 for clarification, which is why -- you'll have

11 a final bite at the apple.

12 RECROSS-EXAMINATION

13 BY MR. SCHUDEL:

14 Q. I just focused on one response you

15 provided to Commissioner Landis in which you I

16 believe described two main thrusts. One was

17 that Sprint's network to become connected to

18 SENTCO was the interest of this

19 interconnection, and second was the alternative

20 of Sprint potentially entering into the retail

21 market itself. Do you remember that testimony?

22 A. Yes, yes.

23 Q. My -- I want to understand this. On the

24 second point, we wouldn't have to be here

25 today, would we? The interconnection agreement

1 that's been fully agreed upon and negotiated
2 would allow you, your company to go into retail
3 service immediately once it were approved. We
4 have no disputes, do we?
5 A. Well, I -- we haven't agreed on all of
6 the terms of interconnection agreement. I wish
7 we have but you're --
8 Q. Let me go back. Let me go back.
9 COMMISSIONER LANDIS: Let's ask
10 the question and then answer, please.
11 Q. (BY MR. SCHUDEL) The only two issues
12 relate to your point one, don't they?
13 A. Yes.
14 Q. So ergo, does it not follow that on the
15 second alternative of the possibility of your
16 company providing retail service itself, that
17 we have no issues between these two companies
18 today that we'd have to have arbitrated, do we?
19 A. Not that I'm aware of.
20 MR. SCHUDEL: Thank you. That's
21 all I have.
22 COMMISSIONER LANDIS: We're
23 going to give you briefly, Mr. Weingard, any --
24 one opportunity for --
25 MR. WEINGARD: One question.

1 COMMISSIONER LANDIS: Sure.

2 FURTHER REDIRECT EXAMINATION

3 BY MR. WEINGARD:

4 Q. With respect to that very point, if

5 there came a time in which Sprint were going to

6 provide retail services in SENTCO's territory,

7 what you're referring to as option two there,

8 is it your understanding that Sprint would be

9 required to -- under the Nebraska Public

10 Service Commission's rules and procedures, to

11 file a tariff for that retail offering of that

12 service?

13 A. Yes, that is my understanding.

14 Q. So before you could actually offer

15 retail services from which you would use the

16 interconnection agreement to carry the traffic,

17 I presume, you would have to file a tariff

18 first, and that would have to be approved by

19 the commission?

20 A. Yes, it would. Yes.

21 MR. WEINGARD: Okay. That's it.

22 COMMISSIONER LANDIS: Finally,

23 questions of the commissioners?

24 Questions of staff?

25 MS. KNUTSON: No.

COMMISSIONER LANDIS: Mr. Burt, you're excused. We thank you for traveling to Nebraska for your testimony this morning --

THE WITNESS: Thank you.

COMMISSIONER LANDIS: -- and your participation in this docket.

Again, we're going to go off the record for just a moment here, Lori.

(An off-the-record discussion was held.)

COMMISSIONER LANDIS: Let's move forward then. Additional evidence on behalf of Sprint?

MR. WEINGARD: No, Mr. Commissioner.

COMMISSIONER LANDIS: Okay. We'll move then to SENTCO.

MR. WEINGARD: As you said in the prehearing, reserve the right to request a brief at the conclusion, which I think your rules required me to do at the close of the hearing.

COMMISSIONER LANDIS: Request a brief?

MR. WEINGARD: Post-arbitration brief.

COMMISSIONER LANDIS: Yes. In fact, we provided for that in our prehearing conference order, I'm sure.

MR. WEINGARD: Okay.

COMMISSIONER LANDIS: Shana, maybe you might get a copy and share that with Mr. Weingard.

MS. KNUTSON: Yes. I believe they're due September 2nd.

COMMISSIONER LANDIS: We'll make sure you have her.

Mackenzie, maybe you can find a copy of my prehearing. That's already provided for.

MR. WEINGARD: Okay. Thank you.

COMMISSIONER LANDIS: I guess we're back on the record. I see Lori typing there, so I guess were back on the record, have been for a while. Let's go ahead.

MR. SCHUDEL: Just to be clear, I assume that Sprint has rested?

COMMISSIONER LANDIS: Yes.

MR. WEINGARD: That's correct.

COMMISSIONER LANDIS: I asked if there's any additional.

MR. SCHUDEL: Call Ms. Sickel to

1 the stand, please.
2 COMMISSIONER LANDIS: Okay.
3 ELIZABETH SICKEL,
4 Called as a witness on behalf of SENTCO,
5 being first duly sworn, was examined and
6 testified as follows:
7 COMMISSIONER LANDIS: Very well.
8 If you'll state your name, spell it please for
9 the court reporter.
10 THE WITNESS: My name is
11 Elizabeth A. Sickel, S-I-C-K-E-L.
12 COMMISSIONER LANDIS: Okay.
13 DIRECT EXAMINATION
14 BY MR. SCHUDEL:
15 Q. Ms. Sickel, would you please identify
16 your employer and business address.
17 A. I'm employed by Southeast Nebraska
18 Telephone Company. My business address is 110
19 West 17th Street, Falls City, Nebraska 68355.
20 Q. And did you file direct testimony in
21 this application?
22 A. Yes.
23 Q. You have in front of you what has been
24 marked by the reporter as Exhibit 3. Is that
25 exhibit a copy of the direct testimony that you

1 did file in this proceeding?
2 A. Yes, it is.
3 Q. If I were to ask you the questions
4 contained in Exhibit 3, would your answers be
5 as they appear therein?
6 A. Yes.
7 Q. And have you reviewed the direct
8 testimony and rebuttal testimony of James L.
9 Burt filed in this matter on behalf of Sprint
10 Communications Company, L.P.?
11 A. Yes, I have.
12 Q. And have you prepared and are you
13 prepared to offer a summary of your testimony?
14 A. Yes.
15 Q. Please proceed.
16 A. In my prefiled testimony, I provided an
17 overview of the service area and customer
18 demographics of Southeast Nebraska Telephone
19 Company which I will refer to as SENTCO.
20 Although I am not an engineer, I also
21 provided a general description of the network
22 arrangements that exist today between SENTCO
23 and other telecommunications carriers. SENTCO
24 provides basic local exchange service, and it
25 also provides exchange access services pursuant

1 to the terms of filed tariffs.
2 Further, in my prefiled testimony, I
3 discussed the history of the negotiations
4 between SENTCO and Sprint Communications
5 Company, L.P., which I will refer to as Sprint,
6 that culminated in Sprint's initiation of this
7 arbitration proceeding.
8 Following our receipt of Sprint's
9 bona fide request for interconnection,
10 representatives of SENTCO have voluntarily and
11 in good faith participated in negotiations with
12 Sprint that have resulted in the parties'
13 agreement on all terms and conditions of an
14 interconnection agreement with the exception of
15 a single issue. That issue is whether Sprint
16 should be allowed to utilize the
17 interconnection agreement between Sprint and
18 SENTCO to provide enabler services to one or
19 more third parties that seek to exchange
20 traffic between SENTCO's end users and the
21 third party's end users without negotiating
22 terms and conditions of interconnection
23 directly with SENTCO.
24 Please allow me to make several points.
25 First, throughout SENTCO's negotiations with

1 Sprint, we have consistently taken the position
2 that SENTCO has no duty to enter into
3 negotiations with Sprint for terms of
4 interconnection that would apply to third
5 parties that were not participating in our
6 negotiations, including Time Warner Cable
7 Information Services, LLC, dba, Time Warner
8 Cable. Sprint acknowledged this to be SENTCO's
9 position.
10 Second, but for Sprint's insistence on
11 application of the Sprint/SENTCO
12 interconnection agreement to Time Warner and
13 other unnamed third parties, we would not be
14 here today because Sprint and SENTCO are in
15 agreement to all other terms of such agreement.
16 Thus, significant amounts of time and money
17 could have been saved.
18 Third, in the future event that Time
19 Warner serves SENTCO with a bona fide request
20 for negotiations of terms and conditions of
21 interconnection agreement in accordance with
22 this commission's November 23rd, 2004, order,
23 in application No. C-3228, SENTCO will engage
24 in good faith negotiations with Time Warner
25 just as we have with Sprint.

1 We do not object to Sprint contracting
2 with Time Warner or for that matter any other
3 entity to provide various services and
4 connection with Time Warner's announced
5 intention to provide voice telecommunications
6 services in SENTCO's service area.
7 As I have stated in my prefiled
8 testimony, when it is economical and
9 commercially reasonable, SENTCO also contracts
10 with third parties to obtain functions or
11 services to enable SENTCO to provide end user
12 telecommunications services.
13 What SENTCO does object to is the
14 attempt by Sprint and Time Warner through their
15 private contract to deprive SENTCO of its
16 rights under the 1996 Telecommunications Act to
17 engage in negotiations of the terms and
18 conditions under which Time Warner will
19 terminate traffic to SENTCO's end users on
20 SENTCO's network and under which SENTCO will
21 terminate traffic to Time Warner's end users on
22 Time Warner's and not Sprint's network.
23 Mr. Burt in his rebuttal criticizes a
24 number of points in my prefiled direct
25 testimony. I want to briefly respond.

1 First, as to the use of -- as to my use
2 of the term enabler to refer to Sprint's role
3 in Time Warner's voice offerings, this term
4 originated with Sprint and Time Warner, not
5 with SENTCO. It aptly connotes and denotes
6 Sprint is not the telecommunications carrier
7 providing telecommunications services in the
8 context of the issue before the commission.
9 THE WITNESS: Paul, I'm missing
10 some pages.
11 MR. SCHUDEL: Yeah. Hang on.
12 Give us just a moment.
13 COMMISSIONER LANDIS: Sure.
14 Take a moment here. We're off the record.
15 (An off-the-record discussion was held.)
16 COMMISSIONER LANDIS: Back on
17 the record then.
18 A. Sprint is not competing with SENTCO for
19 the end users located within our service area.
20 In fact, SENTCO does not compete for any of the
21 third-party services that Sprint indicates it
22 will provide to Time Warner under their private
23 contract.
24 Second, no amount of slight of hand by
25 Mr. Burt will change the fact that Sprint seeks

1 to utilize the terms and conditions of this
2 interconnection agreement for Time Warner's
3 benefit. As I stated above, if this agreement
4 were only for Sprint's benefit, we would not be
5 here today presenting this case. The agreement
6 would have been signed and in effect by now.
7 Third, Mr. Burt's claim that the
8 Sprint/Time Warner arrangement is not a private
9 contract is really difficult to take seriously.
10 The commission will clearly recall the struggle
11 to have this contract produced in application
12 No. C-3228, and that Sprint and Time Warner
13 have each advanced their arguments that the
14 terms and conditions of such contract must be
15 subject to protective orders in applications
16 No. C-3228, C-3204 and now in this case.
17 Mr. Burt's fourth point is that,
18 notwithstanding Sprint's admission that it is
19 only Time Warner that has the customer
20 relationship with the end user, Sprint is,
21 nonetheless, entitled to enter into the
22 interconnection agreement with SENTCO that will
23 govern the exchange of traffic between Time
24 Warner's and SENTCO's end users. The attorneys
25 will short out this issue. I will only add

1 that SENTCO has demonstrated that we'll
2 negotiate and execute an agreement with Sprint
3 to govern exchange of traffic for the end users
4 for which Sprint and SENTCO will compete.
5 If Time Warner requests negotiations of
6 such an agreement, SENTCO will engage in the
7 proper discussions with Time Warner based on
8 the facts that Time Warner brings to the table.
9 Until then, however, SENTCO should not
10 be required to apply this agreement to traffic
11 it may in the future exchange with Time Warner.
12 I recognize that several of SENTCO's
13 positions that I've outlined involve legal
14 interpretations of the 1996 Telecommunications
15 Act, the FCC's rules, decisions by this
16 commission and case law.
17 I further recognize that I do not have a
18 legal background. However, after all of the
19 legal analysis and arguments are presented to
20 you for consideration, I would ask each of you
21 to bear in mind these simple, common sense
22 facts.
23 It is undisputed that the end users that
24 will exchange their calls with SENTCO's
25 customers are Time Warner's customers, not

1 Sprint's.
2 And, two, the commission set forth a
3 procedure in its order in application No.
4 C-3228 to be followed by Time Warner in the
5 event it desired to interconnect with SENTCO.
6 It is undisputed that this procedure has not
7 been followed by Time Warner.
8 Q. (BY MR. SCHUDEL) Ms. Sickel, does this
9 conclude your statement?
10 A. Yes, it does. Thank you.
11 MR. SCHUDEL: She's available
12 for cross.
13 COMMISSIONER LANDIS: Before we
14 move to -- staff questions?
15 MS. KNUTSON: Uh-huh.
16 COMMISSIONER LANDIS: You have
17 questions now, or do you want to wait until
18 cross?
19 MS. KNUTSON: I just have one
20 question. I can go ahead and ask it.
21 CROSS-EXAMINATION
22 BY MS. KNUTSON:
23 Q. Ms. Sickel, on page 8 of your testimony,
24 lines 26 and 27, you say, "However, Time Warner
25 must directly negotiate with us for terms and

1 conditions under which it will interconnect and
2 exchange traffic with SENTCO."
3 A. Yes.
4 Q. You were present for the testimony of
5 Mr. Burt earlier, were you not?
6 A. Yes.
7 Q. And do you recall Mr. Burt stating that
8 he, under the arrangement that he described,
9 that Sprint and SENTCO would be -- would be
10 interconnecting -- the facilities that would be
11 interconnecting, and it would not be Time
12 Warner.
13 How do you reconcile this with your
14 statement that you don't want to have this
15 arrangement with Sprint but you do object to
16 interconnecting and exchanging traffic with
17 Time Warner?
18 A. Well, the traffic -- my understanding is
19 that the traffic that would be exchanged is the
20 Time Warner customer end user traffic. It's
21 not Sprint's traffic because it's not Sprint's
22 end user. It's Time Warner's end user.
23 Therefore, it would be Time Warner's traffic.
24 Q. Okay.
25 MS. KNUTSON: Thank you.

1 MR. SCHUDEL: If I may, I think
2 I omitted to offer or at least reconfirm my
3 offer of Exhibit 3, which was the direct
4 testimony.
5 COMMISSIONER LANDIS: I don't
6 think that was objected to. Was it?
7 MR. WEINGARD: No, no objection.
8 COMMISSIONER LANDIS: Or being
9 heard on that. That will be admitted into
10 evidence.
11 I have a question.
12 THE WITNESS: Yes.
13 COMMISSIONER LANDIS: If this
14 commission only decides this as Iowa, that
15 relationship isn't proper, where does that
16 leave you? You've said that you will negotiate
17 with Time Warner?
18 THE WITNESS: That's right.
19 COMMISSIONER LANDIS: You've
20 been negotiating with Sprint. Where does that
21 leave SENTCO?
22 THE WITNESS: If you ruled
23 against Sprint, is that what you're saying?
24 COMMISSIONER LANDIS: Yeah. If
25 we ruled as Iowa. Obviously different

1 jurisdictions have come down on both sides.
2 THE WITNESS: Right.
3 COMMISSIONER LANDIS: The record
4 should be clear on that. In fact, I think we
5 had exhibits. What is the outcome for your
6 company if the commission says this is not
7 right, Time Warner should be the one at the
8 table?
9 THE WITNESS: Well, if Time
10 Warner would come to the table, would give us a
11 BFR and come to the table, we would have the
12 appropriate discussions with them based on the
13 facts that they would bring to the table.
14 COMMISSIONER LANDIS: I'm
15 wondering because you said you would negotiate
16 with them.
17 THE WITNESS: Right.
18 COMMISSIONER LANDIS: Would that
19 trigger the rural exemption? If you know.
20 Again, you're not a lawyer. I know that.
21 THE WITNESS: I don't know that
22 I could accurately answer that question.
23 COMMISSIONER LANDIS: Sure. I
24 don't want you to speculate.
25 THE WITNESS: Might be better

1 sent to Mr. Watkins.
2 COMMISSIONER LANDIS: I'm having
3 difficulty understanding why when you say
4 you'll negotiate with Sprint, you're willing to
5 negotiate with Time Warner --
6 THE WITNESS: No.
7 COMMISSIONER LANDIS: -- that
8 this becomes the issue that obviously it is
9 because it's here. Okay.
10 We'll move to you then, Mr. Weingard.
11 Commissioner Boyle, I know you have to
12 excuse yourself. Do you have any questions of
13 Ms. Sickel?
14 COMMISSIONER BOYLE: Similarly
15 to yours is I think Mr. Burt testified that
16 this relationship exists in other states and
17 with even other companies, and so if you are --
18 if you know, why would that be different than
19 what's being offered here?
20 THE WITNESS: I don't think I
21 can really comment with a lot of definition on
22 what has transpired in other states. That
23 might be better addressed to Mr. Watkins.
24 But what I do know is that we would be
25 exchanging traffic with Time Warner's

1 customers, not Sprint's. And so appropriately
2 the interconnection agreement between two
3 carriers would need to be between the two
4 carriers that are exchanging traffic of their
5 customers. Does that answer your question?
6 COMMISSIONER LANDIS: Anne, does
7 it?
8 Does this boil down to compensation?
9 THE WITNESS: No.
10 COMMISSIONER LANDIS: In one
11 instance you would be compensated in one way,
12 and in another way it would be a different type
13 of compensation? It's not a compensation
14 issue?
15 THE WITNESS: No. In my view
16 what it boils down to is the fact that we would
17 be exchanging traffic with Time Warner
18 customers, not Sprint's customers. Time Warner
19 is the one serving the end user. So it would
20 only make sense that Time Warner and SENTCO
21 would be the two carriers to negotiate an
22 interconnection agreement for the exchange of
23 traffic between their customers.
24 If Time Warner wants to contract with
25 Sprint through a private contract to provide

1 some network facilities in between, then, you
2 know, we contract with, you know, other
3 entities for services.
4 But to me the bottom line is Time Warner
5 end users and Southeast Nebraska Telephone
6 Company end users, those should be the two
7 entities that should negotiate the ICA and
8 interconnect.
9 COMMISSIONER BOYLE: I guess I'm
10 confused. If they have a partnership of sorts,
11 contract between one another -- and I think at
12 one point there was testimony that if a
13 customer had a problem, from Mr. Burt, that
14 Time Warner would notify them, Sprint, and that
15 Sprint would be taking care of the problem. So
16 I don't know if it's a hands-off relationship
17 as much as the relationship that they have in
18 the way that we would ordinarily think. It's
19 almost as if a joint relationship.
20 And I'm sorry, I should have -- these
21 questions did not occur to me until you got up
22 and made your testimony.
23 So that seems different. And so they're
24 almost partners as opposed to separate in what
25 they're negotiating with you.

THE WITNESS: They do have a private contract with one another, that's true.

COMMISSIONER LANDIS: I don't want to testify for you necessarily, but I'm trying to clear it up in my mind.

Are you saying that SENTCO's position is we should be sitting at the table with Time Warner, even though their switch can't do what we're going to have to have done, then we're still -- we should be negotiating and then they go out and contract with a third party to provide the services that their switch can't provide? Is that -- again, I don't want to testify for you. I'm trying to --

THE WITNESS: No.

COMMISSIONER LANDIS: I'm trying to understand why we're here today and what the outcome is.

THE WITNESS: I am not a switch expert. I would defer to Mr. Watkins what their switch can or cannot do.

COMMISSIONER LANDIS: Fair enough.

THE WITNESS: But, yes, that is our position, that Time Warner Cable is the one

1 that should be coming to the table to us as
2 stated in the commission -- in the previous
3 commission order and the Time Warner
4 certification.
5 COMMISSIONER LANDIS: Okay.
6 That's helpful.
7 Now, Mr. Weingard, we'll move to you and
8 cross or Diane. Who's going to handle?
9 MR. WEINGARD: I will.
10 COMMISSIONER LANDIS: Mr.
11 Weingard. Okay.
12 CROSS-EXAMINATION
13 BY MR. WEINGARD:
14 Q. Ms. Sickel, this is your first time
15 testifying before the Nebraska Commission; is
16 that right?
17 A. Yes, it is.
18 Q. Is it the first time you've testified
19 before any state commission?
20 A. Yes.
21 Q. Sticking with the point we've just been
22 discussing, your focus on your opinion which
23 you delivered in your summary was on the, shall
24 I say, the business retail relationship; is
25 that right? In other words, you believe that

1 your company is only required to interconnect
2 with a company that has the end user; correct?
3 A. Yes.
4 Q. And when -- you also would agree with me
5 that the physical pieces of the network that
6 are going to be interconnecting between and
7 among Sprint and SENTCO are going to be the
8 facilities and equipment owned or leased by
9 Sprint and SENTCO; right?
10 A. Yes.
11 Q. That's what's meant by the term direct
12 interconnection under the act? Are you
13 familiar with that term?
14 A. I probably can't adequately quote what
15 the term is meant to be under the act. That
16 would probably better be directed to
17 Mr. Watkins.
18 Q. Okay. But, yet, your testimony is still
19 that under the act, we're not entitled to
20 interconnection?
21 A. That's my understanding, yes.
22 Q. Okay. You said I think in your
23 testimony that your experience in
24 telecommunications doesn't involve formal
25 training or network on technical aspects; is

1 that right?
2 A. That's correct.
3 Q. And you stated that you don't have,
4 quote, I think extensive experience, close
5 quote, relating to technical aspects of the
6 network; is that right?
7 A. That's correct.
8 Q. You rely on in-house technicians,
9 outside consultants and consulting engineers;
10 is that correct?
11 A. That's correct.
12 Q. One of the consults and consulting
13 engineers that you rely upon is Mr. Steven
14 Watkins; is that right?
15 A. Yes.
16 Q. Did you talk to Mr. Watkins before you
17 prepared your prefiled testimony in this case?
18 A. No.
19 Q. Did Mr. Watkins edit versions of your
20 testimony before you filed it in this case?
21 A. Not that I'm aware of.
22 Q. Okay. You said you were familiar with
23 the Sprint CLEC certification proceeding which
24 is identified by the number C-3204; right?
25 A. Yes.

1 Q. Did you attend that proceeding?
2 A. Yes.
3 Q. At that time, which was -- that was in
4 November of 2004, roughly?
5 A. Sounds about right.
6 Q. Okay. At that time did you have a
7 concern with the potential issue that Sprint
8 might be the interconnecting party seeking an
9 interconnection agreement with SENTCO?
10 A. I honestly can't recall at that time if
11 we did or not.
12 Q. You don't know whether SENTCO was in any
13 way concerned that it would be Sprint who would
14 be the party seeking to interconnect with
15 SENTCO as opposed to Time Warner Cable?
16 A. Not that I'm not trying to answer the
17 question. I just -- off the top of my head, I
18 just can't recall.
19 Q. Okay. So you're presumably aware
20 Mr. Watkins filed prefiled testimony in that
21 case? I'm talking about the Time Warner CLEC
22 certification hearing.
23 A. Yes, I think that's true.
24 Q. You don't know whether -- as you sit
25 here today, whether or not one of the issues he

1 raised was a concern about Sprint being the
2 proposed interconnecting party?
3 A. It might have been, but I don't have
4 that whole testimony in front of me. And I
5 honestly can't recall.
6 Q. Okay. You spoke a little bit about the
7 interconnection negotiations with Sprint and
8 SENTCO in this case.
9 A. Uh-huh, yes.
10 Q. Were you personally involved in those
11 discussions?
12 A. Yes.
13 Q. All of them?
14 A. I believe so, yes.
15 Q. Isn't it true that those discussions, at
16 least from a point in time which occurred
17 roughly towards the end of last year, the very
18 first of 2005, meaning January, relied heavily
19 on an agreement that was already in existence
20 between SENTCO and Western Wireless?
21 A. I believe the initial ICA was somewhat
22 crafted from the Western Wireless ICA.
23 Q. Okay. So a lot of those terms were
24 agreed upon based on the existence of a prior
25 agreement between SENTCO and Western Wireless?

1 A. I believe some of them were.
2 Q. Now, Time Warner Cable never requested
3 negotiations for an interconnection agreement
4 with SENTCO; is that right?
5 A. That's correct.
6 Q. So when you answer a question on page 5
7 of your prefiled testimony, "if and when a
8 third-party carrier such as Time Warner Cable
9 requests negotiations" --
10 COMMISSIONER LANDIS: What line
11 are you on?
12 MR. WEINGARD: I'm sorry. Line
13 7 through 9.
14 COMMISSIONER LANDIS: Thank you.
15 Q. (BY MR. WEINGARD) Again, "if and when a
16 third-party carrier such as Time Warner Cable
17 requests negotiation of an interconnection
18 agreement with SENTCO, will SENTCO engage in
19 good faith negotiations with such requesting
20 party?" Do you see that testimony?
21 A. Yes, I do.
22 Q. Your statement, at least the reference
23 there with respect to Time Warner Cable
24 requesting negotiation, is not based on any
25 actual experience with Time Warner Cable, is

1 it, since they haven't actually requested
2 negotiations from you?
3 A. That's correct.
4 Q. Okay. Now, you discuss at page 7 of
5 your testimony, lines 24 through 30, regarding
6 certain, quote, "private contracts," close
7 quote, that SENTCO has entered into with
8 directory assistance and operator services
9 providers. Are you familiar with that
10 testimony?
11 A. Yes.
12 Q. Those entities with which SENTCO has
13 entered into contracts are not certified in the
14 state of Nebraska as CLECs; is that right?
15 A. That is true.
16 Q. And so those companies that SENTCO has
17 contracted with for directory assistance and
18 operator services presumably have never
19 approached SENTCO to seek an interconnection
20 agreement or negotiations; is that right?
21 A. That is correct.
22 Q. Now, again, you said in your testimony
23 that you had general working familiarity with
24 the network. So I'm going to try to restrict
25 my questions on that basis.

1 Based on that general familiarity, have
2 you identified any problem with the physical
3 equipment and switches and other related
4 network elements that Sprint seeks to use to
5 interconnect with SENTCO?
6 A. Not that I am aware of at this point in
7 time.
8 Q. Okay. In your discussions with the
9 various consultants, third parties, in-house
10 engineers, have they identified a problem with
11 the physical equipment that Sprint seeks to use
12 to interconnect with SENTCO?
13 A. Not that I'm aware of.
14 Q. And you testified, also, at page 9,
15 lines 3 through 7 of your prefiled testimony
16 that Sprint does not -- has not filed a tariff.
17 Do you recall that testimony?
18 A. Yes.
19 Q. Isn't it true the commission has not
20 ordered Sprint to file a tariff with the -- to
21 use your term, regarding the so-called enabler
22 services?
23 A. That is my understanding.
24 Q. Is it your testimony -- since you said
25 you sat in on the entire hearing, is it your

1 testimony that in the Time Warner CLEC
2 certification order, that the commission
3 ordered Sprint to file a tariff with respect to
4 the so-called enabler services?
5 A. I don't recall.
6 Q. You said you're familiar with the order;
7 is that right?
8 A. Yes. Generally.
9 Q. Okay. But you don't recall specifically
10 whether there was any provision in there that
11 ordered us, meaning Sprint, to actually file a
12 tariff with respect to what you call the
13 enabler services?
14 A. Not without looking at it in front of me
15 today, no.
16 Q. I'm sorry?
17 A. Not without having it here in front of
18 me to look at, no.
19 Q. I could put it in front of you. But I
20 think I can reserve it for argument and the
21 brief. So there's no point.
22 MR. WEINGARD: No further
23 questions of this witness.
24 COMMISSIONER LANDIS:
25 Commissioner Boyle, I ask you again?

1 Commissioner Johnson?
2 Mrs. Knutson?
3 MS. KNUTSON: No questions.
4 Thank you.
5 COMMISSIONER LANDIS: We'll go
6 back to redirect here in a minute.
7 Tell me, Mrs. Sickel, if Time Warner
8 were at the table, was at the table instead of
9 Sprint, how would the ultimate or resulting
10 interconnection agreement differ under those
11 circumstances than it would with Sprint at the
12 table?
13 THE WITNESS: I --
14 COMMISSIONER LANDIS: If you
15 know.
16 MR. WEINGARD: Mr. Commissioner,
17 I'm sorry, I -- I have been very hesitant to
18 object to a question that the commissioner has
19 phrased.
20 COMMISSIONER LANDIS: That's
21 wise.
22 MR. WEINGARD: However, it is my
23 job to do so. And I just want to get out on
24 the record that you have asked her a question
25 that's fully hypothetical and calls for

1 speculation.
2 COMMISSIONER LANDIS: And
3 that's --
4 MR. WEINGARD: She can answer.
5 COMMISSIONER LANDIS: --probably
6 a good -- I'm asking what her expectations
7 would be.
8 I'll tell you what, we'll just pass on
9 that. I'll work it out.
10 THE WITNESS: Okay.
11 COMMISSIONER LANDIS: We'll pass
12 on that question. So let's go to -- if no
13 questions from the commissioners or staff,
14 we'll go back to redirect.
15 REDIRECT EXAMINATION
16 BY MR. SCHUDEL:
17 Q. Just one follow-up -- and it is off of
18 Commissioner Landis' question -- wouldn't it be
19 correct, Ms. Sickel, that unless and until Time
20 Warner and SENTCO representatives came to the
21 bargaining table, there would be no way for you
22 to know what business terms and conditions
23 would be desired by them?
24 A. That is correct.
25 THE WITNESS: That is what my

1 response would have been to your question.
2 MR. SCHUDEL: Thank you. That's
3 all I have.
4 RECROSS-EXAMINATION
5 BY MR. WEINGARD:
6 Q. And so the possibility exists in that
7 hypothetical world that you could not reach
8 agreement on every term with a hypothetical
9 Time Warner sitting down at the table with you
10 and that process could take arbitration; is
11 that right?
12 A. Hypothetically I cannot predict what
13 they would bring to the table, you know, in
14 terms of what their desires would be.
15 Q. So just so we're clear, though, it's
16 possible that you couldn't agree on every term
17 and it might have to go to arbitration; right?
18 A. Hypothetically, that's possible.
19 Q. Are you aware what the timeframe is set
20 forth in the act for how long it can take for
21 arbitration to be concluded, what the outside
22 limit is?
23 A. Not specifically without having it here
24 in front of me. I know it's a while.
25 Q. If I told you it was 270 days from

1 beginning to conclusion at the commission,
2 would you agree with that, or would you still
3 not know?
4 A. I would still not know for sure.
5 MR. WEINGARD: Okay. Thank you.
6 Nothing further.
7 COMMISSIONER LANDIS: You had
8 nothing to do with who decided to sit down and
9 negotiate at the table with you, did you?
10 THE WITNESS: As far as whether
11 it would be Sprint or Time Warner?
12 COMMISSIONER LANDIS: As far
13 as --
14 THE WITNESS: As far as whether
15 or not it was Sprint or Time Warner?
16 COMMISSIONER LANDIS: Sure.
17 THE WITNESS: No, I didn't.
18 COMMISSIONER LANDIS: Any final
19 questions?
20 Anne?
21 Lowell?
22 Shana?
23 MS. KNUTSON: No.
24 COMMISSIONER LANDIS: You're
25 excused. Again, we thank you for traveling to

1 Lincoln for your testimony today and for
2 participating in this docket.
3 Let's move right ahead. I want
4 Commissioner Boyle to -- obviously we'll have a
5 transcript and we'll all be able to read it.
6 But I'd like Anne to have an opportunity to
7 question Mr. Watkins if she has questions. So
8 let's press ahead.
9 STEVEN E. WATKINS,
10 Called as a witness on behalf of SENTCO,
11 being first duly sworn, was examined and
12 testified as follows:
13 COMMISSIONER LANDIS: Very well,
14 sir. If you'd be seated, state your name,
15 spell it for the court reporter.
16 THE WITNESS: Steven E. Watkins,
17 W-A-T-K-I-N-S, Steven with a V.
18 COMMISSIONER LANDIS: Okay.
19 DIRECT EXAMINATION
20 BY MR. MOORMAN:
21 Q. Could you please state your name,
22 employer and business.
23 A. I just stated my name. I'm employed as
24 a telephone communications management
25 consultant. I work as an independent

1 contractor/consultant with the law firm of
2 Kraskin, Moorman & Cosson, LLC. My business
3 address is 2120 L Street, Northwest, Suite 520,
4 Washington, D.C., 20037.
5 Q. Did you file rebuttal testimony in
6 application No. C-3429?
7 A. Yes.
8 Q. And did you have in front of you I
9 believe admitted into evidence but Exhibit 22,
10 and is that a copy of your rebuttal testimony
11 that you have filed in this proceeding?
12 A. Yes.
13 Q. And do you have any corrections to that
14 testimony?
15 A. One small one on page 14, line 13, the
16 word "date" should be "data", D-A-T-A.
17 Q. And with that correction, if I asked you
18 the questions contained in this exhibit, would
19 your answers be the same as they appear
20 thereon?
21 A. They would.
22 Q. Have you reviewed the direct and
23 rebuttal testimony of Mr. James R. Burt filed
24 in this matter on behalf of Sprint
25 Communications Company L.P.?

1 A. Yes, I have.
2 Q. Would you present a summary of your
3 testimony?
4 A. Yes. My prefiled rebuttal testimony
5 responded to Mr. Burt's direct testimony where
6 he sets forth comments and conclusions that are
7 inconsistent with the record already before
8 this commission, inconsistent with the
9 application of the rules of the Federal
10 Communications Commission governing the
11 exchange of local traffic between local
12 exchange carrier competitors and inconsistent
13 with common sense.
14 Mr. Burt has reshaped the facts into
15 something new and different. That effort is an
16 obvious attempt to avoid the actual service
17 distinctions that characterize the arrangement
18 that Time Warner Cable intends to have with
19 Sprint. Contrary to Mr. Burt's suggestion,
20 Time Warner Cable would be the telephone
21 exchange carrier in competition with SENTCO,
22 and it would be the carrier that is exchanging
23 traffic with SENTCO, not Sprint.
24 The commission should not allow Sprint
25 and Time Warner to expand the interconnection

1 agreement under consideration in this
2 proceeding so that it can be extended using
3 this enabler service of Sprint to a third-party
4 local exchange carrier competing with SENTCO
5 that's not a party to the agreement.
6 Here are the facts, first, the
7 commission has already concluded in its
8 decision in application No. C-3228 that if Time
9 Warner Cable, quote, "is the retail provider
10 who seeks to compete in a rural incumbent's
11 area," end of quote, then Time Warner Cable
12 must be held, quote, "accountable to the
13 commission," end of quote.
14 And in this regard, the commission
15 explicitly ordered that Time Warner Cable must,
16 quote, "reach an interconnection/resale
17 agreement with the pertinent local exchange
18 carrier and receive commission approval," end
19 of quote.
20 It is undisputed that Sprint intends to
21 provide certain facilities, services and
22 back-office functions to Time Warner Cable,
23 that Time Warner Cable intends to offer and
24 provide telephone exchange services to end
25 users located in SENTCO's service area.

1 Mr. Burt's testimony confuses these
2 facts in an attempt to shield Time Warner from
3 the already-established requirement in
4 circumventing of the commission's C-3228 order.
5 Time Warner has to be allowed to provide
6 telephone exchange service to end users in
7 SENTCO's service area. Mr. Burt states that
8 this service is plain ordinary telephone
9 service, not some voice over internet protocol
10 service. Therefore, there is no issue
11 regarding the commission's jurisdiction over
12 Time Warner Cable or the ability of the
13 commission to ensure that the requirements of
14 C-3228 are met as ordered.
15 Second, Mr. Burt misstates the FCC's
16 rules that govern the exchange of local traffic
17 between two competing local exchange carriers.
18 In my rebuttal testimony at pages 16
19 through 18, I have quoted the explicit words of
20 the rules and the discussion of the FCC, and
21 Mr. Burt's testimony cannot simply be squared
22 with either.
23 Sprint will not be originating local
24 calls for end users or terminating local calls
25 to end users as the FCC section 51.701 rules

1 describe. Time Warner Cable will be. The
2 reciprocal compensations rules address an
3 arrangement between two local carriers, not
4 between and among three.
5 With respect to transport, the rules in
6 the FCC's discussion in its First Report and
7 Order explicitly state that the terminating
8 carrier is the carrier that, quote, "directly
9 serves the called party," end of quote. It is
10 apparent that Time Warner Cable will be the
11 party directly serving the called party when a
12 SENTCO customer calls one of Time Warner
13 Cable's end users in the SENTCO service area,
14 not Sprint.
15 The same rules go on to state that the
16 carrier terminating a local call is the one
17 that delivers such traffic to, quote, "the
18 called party's premises." Again, the facts
19 indicate that it's Time Warner Cable that will
20 be performing this function, not Sprint.
21 Mr. Burt offers a whole lot of
22 explanations as to what he means by switching
23 and that arrangement that he has with Time
24 Warner Cable. His explanation avoids in some
25 cases the fact that Time Warner Cable will be

1 operating a switch.
2 We heard this morning in his testimony
3 and his summary in some cases he called --
4 calls it a PBX-like switch, some cases he calls
5 it a soft switch. Nevertheless, it has
6 something that is a switch. That switch will
7 be used by Time Warner Cable to switch calls to
8 Time Warner Cable's individual users.
9 I would add the use of the word PBX in
10 the -- Mr. Burt likened that to the
11 commission's own PBX. The P of that stands for
12 private. In this case Time Warner would be
13 using a switch to switch service publicly to
14 its end users that are buying local exchange
15 service.
16 Calls between Time Warner end users
17 would be switched exclusively by Time Warner
18 Cable. If a Time Warner Cable end user
19 calls -- calls are placed to numbers on the
20 public switched telephone network, it is Time
21 Warner Cable's switch that will route those
22 calls to Sprint, the entity to which Time
23 Warner Cable has contracted for certain
24 switching services. When Sprint delivers calls
25 from the public switched network to Time Warner

1 Cable, it will be Time Warner Cable that
2 switches these calls to its individual end
3 users.
4 Now, Mr. Burt adds a whole lot of
5 industry jargon terminology, all of which are a
6 number of tools that the industry used. For
7 example --
8 MR. WEINGARD: I'm sorry. Are
9 you summarizing your testimony, or are you
10 summarizing the testimony that was produced
11 during this hearing today?
12 THE WITNESS: I'm reacting to
13 Mr. Burt's --
14 MR. WEINGARD: You're not
15 allowed to, sir. You're supposed to be
16 summarizing your direct and your rebuttal
17 testimony, not the testimony you're hearing
18 live today.
19 THE WITNESS: Okay.
20 MR. WEINGARD: That is for
21 redirect and cross.
22 COMMISSIONER LANDIS: Yeah,
23 that's probably a reasonable statement of where
24 we are, Mr. Watkins. Summarize your prefiled
25 testimony, if you would.

1 THE WITNESS: I will continue.
2 MR. MOORMAN: If I could.
3 COMMISSIONER LANDIS: You'll get
4 an opportunity to get a bite of that apple.
5 MR. MOORMAN: Thank you, sir.
6 COMMISSIONER LANDIS: Let's just
7 have a summary of his prefiled.
8 A. Sprint is only a middleman here and
9 neither originates or terminates local calls
10 and, therefore, is not recognized in the FCC's
11 local traffic exchange rules as being entitled
12 to a reciprocal compensation arrangement.
13 Sprint's role is simply to transit
14 traffic from an originating carrier to the
15 network of Time Warner Cable where the call is
16 terminated on Time Warner Cable's facilities,
17 quote, "to the called party's premises."
18 A three-party arrangement as intended by
19 Sprint here is not even a requirement of
20 interconnection. And the FCC has acknowledged
21 the fact that there are no rules that address
22 this type of arrangement.
23 In any event, Sprint will not terminate
24 SENTCO local calls pursuant to these rules.
25 Time Warner Cable will. Thus, it is Time

1 Warner Cable that is obligated under subpart H
2 of the FCC's rules to negotiate or arbitrate an
3 interconnection agreement with SENTCO.
4 Now, I'd like to say exactly what the
5 FCC said about that. In its First Report and
6 Order on local competition, quote, "pursuant to
7 section 251(b)(5) of the act," end of quote --
8 this is the section of the act that describes
9 the transport and termination of traffic
10 between local competitors. Back to the quote,
11 "All local exchange carriers, including small
12 incumbent LECs and small entities offering
13 competitive local exchange services have a duty
14 to establish reciprocal compensation for the
15 transport and termination of local exchange
16 service."
17 It is Time Warner Cable, not Sprint,
18 that is the entity offering competitive --
19 COMMISSIONER LANDIS: You're not
20 quoting the FCC at that juncture?
21 THE WITNESS: End of quote. Let
22 me start again.
23 A. This is not a quote, it is Time Warner
24 Cable, not Sprint that is the entity offering
25 competitive local exchange services. And it is

1 Time Warner Cable that has the duty to
2 establish a reciprocal compensation arrangement
3 for the transport and termination terms and
4 conditions with SENTCO.
5 Sprint should not be allowed in this
6 proceeding to turn that requirement on its head
7 or to deny SENTCO its rights to establish such
8 terms through bilateral negotiations and/or
9 arbitration with Time Warner as the actual
10 local exchange carrier exchanging local traffic
11 with SENTCO. The commission's order in C-3228,
12 FCC's subpart H rules and common sense require
13 this result.
14 Q. (BY MR. MOORMAN) Does this conclude your
15 statement?
16 A. Yes, it does.
17 MR. MOORMAN: Just to confirm,
18 Lori, I believe that Exhibit 22 and the three
19 attachments have already been received into
20 evidence?
21 THE REPORTER: I believe so, but
22 I need to check.
23 COMMISSIONER LANDIS: You're
24 showing that as being offered and admitted? I
25 don't even show it as being offered at this

1 point. Maybe I just didn't -- I didn't mark it
2 correctly.
3 MR. SCHUDEL: For the record,
4 shall we just do that?
5 COMMISSIONER LANDIS: Yes.
6 Let's make an offer because I don't show it as
7 being offered yet.
8 MR. MOORMAN: Okay.
9 COMMISSIONER LANDIS: That's
10 Exhibit 22.
11 MR. MOORMAN: 22.
12 COMMISSIONER LANDIS: Watkins'
13 testimony.
14 MR. MOORMAN: Plus the three
15 attachments.
16 COMMISSIONER LANDIS: Plus the
17 attachments.
18 MR. MOORMAN: I'd offer that
19 into evidence.
20 MR. WEINGARD: No objection.
21 COMMISSIONER LANDIS: Okay.
22 Very well. That's admitted into evidence.
23 (Exhibit No. 22 is made a part
24 of this record and may be found
25 separate.)

1 MR. MOORMAN: Mr. Watkins is
2 available for cross.
3 COMMISSIONER LANDIS: I have one
4 question before we move to cross. How do you
5 square your -- and this is a little beyond the
6 scope of direct. How do you square your
7 analysis of this relationship with the recent
8 Illinois order? If you're familiar with it. I
9 would assume that you are because of your --
10 THE WITNESS: I have not studied
11 the analysis --
12 COMMISSIONER LANDIS: It's just
13 a recent one. Okay. Fair enough. We'll move
14 to cross.
15 MR. WEINGARD: Mr. Commissioner,
16 I think you said we were going to break at one.
17 Would this be an appropriate time?
18 COMMISSIONER LANDIS: Excuse me.
19 Pardon me. Let's discuss this.
20 (1:01 p.m. to 1:50 p.m. recess taken.)
21 (Exhibit No. 25 marked for
22 identification on behalf of
23 SENTCO.)
24 COMMISSIONER LANDIS: Let's go
25 back on the record then if we're all ready.

1 And I think we're at -- I think you just
2 tendered Mr. Watkins for cross; is that --
3 MR. WEINGARD: Yes.
4 COMMISSIONER LANDIS: -- fair,
5 Mr. Weingard?
6 MR. WEINGARD: Yes.
7 Mr. Commissioner, mindful of the discussion we
8 had in your library this morning and in view of
9 our position that our continuing objection and
10 Mr. Watkins' testimony is all in the nature of
11 legal argument and legal conclusion, we have no
12 questions for this witness today.
13 And I apologize for not making that
14 decision on the spot an hour ago. But I had to
15 talk to my clients about it.
16 COMMISSIONER LANDIS: Not at
17 all.
18 MR. WEINGARD: Otherwise, I'm
19 sensitive to -- I wouldn't have made us all go
20 to lunch.
21 COMMISSIONER LANDIS: No, no.
22 That's perfectly fine. It's good that you did
23 visit with your client. Better that and then
24 we all have a little lunch break than for you
25 to make that decision and then find out,

oops --

MR. WEINGARD: Exactly.

COMMISSIONER LANDIS: -- we don't agree. So that's absolutely fine.

So we'll then go to our staff for questions.

MS. KNUTSON: Thank you. I don't have any questions for Mr. Watkins either.

COMMISSIONER LANDIS: Commissioner Johnson?

COMMISSIONER LOWELL JOHNSON: No, not really.

COMMISSIONER LANDIS: I'd asked you about squaring your testimony with the Illinois. You're not familiar with that.

I guess I have no questions.

There's been no cross. You've had direct.

MR. SCHUDEL: I think Tom has a limited redirect if we could, please.

COMMISSIONER LANDIS: Okay. Limited because there's been no cross. Ask a few questions.

1 REDIRECT EXAMINATION

2 BY MR. MOORMAN:

3 Q. Mr. Watkins, were you present this

4 morning when Mr. Burt was asked questions about

5 your rebuttal testimony?

6 A. Yes.

7 Q. Are you familiar what I believe Mr. Burt

8 referred to as industry factors such as CLLI

9 codes, CO numbering, resources, LERG

10 designations?

11 A. Yes.

12 Q. In your opinion, do you agree that those

13 factors have any significance for purposes of

14 defining the parties entitled to a reciprocal

15 compensation arrangement?

16 A. No, they're not included in the rules

17 whatsoever. The rules refer to specific

18 language that defines the carrier that's

19 providing termination.

20 MR. MOORMAN: That's it, Your

21 Honor.

22 COMMISSIONER LANDIS: I'm going

23 to give you one more opportunity.

24 MR. WEINGARD: I have nothing

25 for this witness. Thank you.

THE WITNESS: I really do wish you had done this before lunch.

COMMISSIONER LANDIS: I'm sorry. I didn't hear that. But that's -- and you traveled to Nebraska for a brief examination.

THE WITNESS: That's all right.

COMMISSIONER LANDIS: With that then, you're excused.

Do you have additional evidence?

MR. SCHUDEL: Just wanted to wrap up a couple of matters concerning two exhibits that are -- that I don't believe I've offered and one additional exhibit to be offered.

COMMISSIONER LANDIS: Mr. Watkins, we appreciate you traveling to Nebraska --

THE WITNESS: I love it.

COMMISSIONER LANDIS: -- and for participating in this docket. We hope you have a safe trip home.

MR. SCHUDEL: I'm just going to give these to you because I'm going to refer to it in a minute. I'm looking at 13 and 14, Darren.

1 MR. WEINGARD: Okay.
2 MR. SCHUDEL: Let's start with a
3 reference to Exhibit 13, which is the Time
4 Warner responses and objections to data
5 requests. I do wish to make an offer of this.
6 And I'd liked to explain why.
7 COMMISSIONER LANDIS: Is this an
8 offer of proof?
9 MR. SCHUDEL: Well, I'm going to
10 make an offer of it. And you can rule on it
11 after I'm sure Mr. Weingard objects.
12 But if you refer to page 2 -- and I'm
13 not going to read this into the record,
14 obviously. It is the -- because it's not been
15 received. But the response to No. 2 that
16 appears on the top half of page 2 is the -- is
17 a description of the Time Warner network and
18 its interplay with the Sprint network.
19 I believe it is directly relevant to the
20 dialogue we've had here today from Mr. Burt as
21 well as from Mr. Watkins concerning this
22 network orientation and organization. And, as
23 such, I would reoffer this. And I believe it
24 is -- has the probative value that is necessary
25 under 84-914(1), that guides your

1 consideration.
2 I'll move on to Exhibit 14. Probably we
3 want to dispense with this one first.
4 MR. WEINGARD: I absolutely
5 strongly object to the introduction of this
6 document into evidence in this proceeding. And
7 I would say under the rules of evidence -- I
8 know they're not strictly applicable here, but
9 I guess it would be 27-403, the entry of this
10 type of document in this proceeding is so
11 prejudicial to Sprint that its probative value,
12 if any, is clearly outweighed. And I will tell
13 you why.
14 Sprint was not a party to this
15 proceeding, did not get an opportunity to
16 cross-examine these witnesses. And there seems
17 to be a suggestion here that just simply
18 because Time Warner Cable said something, that
19 somehow that is the gospel truth.
20 Without my having an opportunity to
21 cross-examine on their responses and their
22 testimony, there is no way that it can come in
23 in this proceeding to establish a fact against
24 my client.
25 MR. SCHUDEL: And the only

1 comment in response is that, as we observed on
2 multiple occasions, Mr. Burt was very willing
3 to speak, albeit he perhaps said he wasn't, but
4 speak on behalf of Time Warner.
5 There was a good deal of testimony
6 offered this morning that certainly would have
7 been directly attributable and certainly was
8 hearsay but was not objected to because of your
9 rules of evidence.
10 MR. WEINGARD: One other point
11 then in response to that, counsel is well aware
12 that the rules of this commission would have
13 permitted him to subpoena a third-party witness
14 to appear in this proceeding and to request
15 documents from Time Warner if it had intended
16 to do so and did not do so.
17 I will say this, though, I will
18 anticipate the next exhibit, which is
19 Ms. Patterson --
20 COMMISSIONER LANDIS: Let's deal
21 with this. Let's deal with this. That
22 concludes your argument?
23 MR. WEINGARD: That concludes my
24 argument.
25 COMMISSIONER LANDIS: I'm going

1 to withhold on this, this. We'll advise the
2 parties within the next couple of days about
3 how I'm going to ultimately resolve the issue.
4 So for briefing purposes, you will know whether
5 this is in evidence or not.
6 (Exhibit No. 13 is made a part
7 of this record and may be found
8 in Volume II.)
9 MR. WEINGARD: Okay.
10 MR. SCHUDEL: Okay.
11 COMMISSIONER LANDIS: We'll do
12 that. But I'm going to reserve on this.
13 Now, your next offer is?
14 MR. SCHUDEL: The next offer is
15 Exhibit 14. And I will direct your attention,
16 if you would, please, to page -- hang on one
17 second -- to page 5. Near the lower part of
18 the page, there is testimony that directly
19 contradicts and, therefore, would impeach, I
20 believe, the testimony offered by Mr. Burt,
21 that it was his, quote, understanding that Time
22 Warner was going to offer us voice service as a
23 stand-alone service.
24 This -- the last -- from lines 21
25 through 24 specifically address Time Warner's

1 plans with regard to offering its voice service
2 as a bundled service. And as such, I think it
3 is not only better evidence, but it obviously
4 is impeachment evidence. And, again,
5 notwithstanding Mr. Weingard's argument about
6 not being present at that, at this docket,
7 certainly they had the opportunity to
8 participate.
9 I mean, this is 3228. Their docket is
10 3204. It came after theirs. It wasn't before
11 them. There was no surprise.
12 But, again, from the rules of evidence
13 standpoint -- it's Rule 607 -- I'm entitled to
14 impeach. And this is a piece of information
15 that would impeach what he testified on behalf
16 of Time Warner as to his understanding.
17 COMMISSIONER LANDIS: Mr.
18 Weingard?
19 MR. WEINGARD: My reason -- same
20 objections and note that this is an apparent
21 collateral attack on your decision in the CLEC
22 certification procedure for Time Warner. The
23 time to address those issues with respect to
24 what those witnesses said was in that
25 proceeding.

1 They could have had those witnesses in
2 this proceeding had they wanted to confront our
3 witnesses with those testimonies. We would
4 have been able to cross-examine the Time Warner
5 witnesses if we wanted to. And so the
6 prejudicial value so substantially outweighs
7 any probative value of this.
8 COMMISSIONER LANDIS: Okay.
9 And, finally, you have one other offer to make?
10 (Exhibit No. 14 is made a part
11 of this record and may be found
12 in Volume II.)
13 MR. SCHUDEL: I do. Before I
14 get to that, which I don't anticipate there
15 will be any controversy over this, but in the
16 event -- since I don't now know your rulings on
17 Exhibits 7, 13 and 14, in the event that you
18 should rule that they are not to be received in
19 evidence, I would ask that each be regarded as
20 an offer of proof for the record.
21 COMMISSIONER LANDIS: Okay.
22 That's on the record.
23 MR. SCHUDEL: I don't know
24 whether this is going to be relevant or not. I
25 can give you this. Exhibit 25 is simply Anne

1 Bogus' authentication of the exhibits having
2 been taken from the files of the Commission. I
3 would offer Exhibit 25.
4 COMMISSIONER LANDIS: Lori, do
5 you show this as Exhibit 25?
6 THE REPORTER: I do.
7 COMMISSIONER LANDIS: Okay.
8 Getting it down wrong.
9 Mr. Weingard?
10 MR. WEINGARD: I have no
11 objection.
12 COMMISSIONER LANDIS: Exhibit 25
13 will be admitted into evidence.
14 (Exhibit No. 25 is made a part
15 of this record and may be found
16 in Volume II.)
17 MS. KNUTSON: Just for
18 clarification, 25 is just a modification of
19 what we already admitted as 24, which Anne
20 Bogus also signed?
21 MR. SCHUDEL: Correct.
22 MS. KNUTSON: So it's just -- it
23 adds additional exhibits --
24 MR. SCHUDEL: That's true.
25 MS. KNUTSON: -- is that right?

1 MR. SCHUDEL: That's all it
2 does.
3 COMMISSIONER LANDIS: Okay.
4 MR. SCHUDEL: And I did it that
5 way simply because I didn't know what your
6 ruling would be on those. And since you've
7 taken it under advisement, I thought I'd offer
8 it.
9 I believe everything has been received
10 in evidence. So we rest.
11 COMMISSIONER LANDIS: All right.
12 Just so my record's the same as yours, Lori,
13 I'm showing that we're withholding ruling on 7,
14 13 and 14, and that will be done. And I'm
15 showing 15 and 16 as not being offered?
16 MR. SCHUDEL: No. 16 was
17 offered and received.
18 COMMISSIONER LANDIS: All right.
19 15 and 17.
20 MR. SCHUDEL: Correct. So,
21 actually, 9 and 11, also.
22 COMMISSIONER LANDIS: And 9,
23 correct, and 11. I've got a line through
24 there.
25 Then I'm showing 100, 101 as being

withdrawn? And with those exceptions, everything with the exception of 7, 13 and 14 are admitted into evidence. Is that -- everybody agree with that?

MR. SCHUDEL: Yes.

MR. WEINGARD: Yes.

COMMISSIONER LANDIS: Okay. We're going to go off the record. And we'll talk just briefly about briefing schedule.

(Hearing concluded 2:01 p.m.)