UNITED STATES DISTRICT COURT
DISTRICT OF NEBRASKA

FILED
US DISTRICT COURT
DISTRICT OF NEBRASKA
JAN 17 2006
OFFICE OF THE CLERK

SPRINT COMMUNICATIONS COMPANY L.P.,

Plaintiff,

v.

NEBRASKA PUBLIC SERVICE etc.; et al.,

Defendants.

No.: 4:05 CV 03260-TDT

STIPULATED RECORD ON APPEAL

VOLUME II

4:05cv3260-A45B

UNITED STATES DISTRICT COURT
DISTRICT OF NEBRASKA

SPRINT COMMUNICATIONS COMPANY L.P., Plaintiff, v. NEBRASKA PUBLIC SERVICE, etc.; et al., Defendants.	No: 4:05 CV 03260 **STIPULATION DESIGNATING RECORD ON APPEAL**

Plaintiff and Defendants, by and through their respective counsel, hereby stipulate and agree that the Record on Appeal in this proceeding shall contain the following documents:

Tab No.	Date Filed	Document Filed	Bates Range
1	5/23/05	Petition for Arbitration of Sprint Communications Company L.P., C-3429	0001 – 0034
2	5/26/05	NPSC's Letter of Notification to Sprint (acknowledging receipt of Petition for Arbitration, setting due dates, etc.), C-3429	0035
3	5/31/05	[SENTCO's] Motion for Commission to Act as Arbitrator, C-3429	0036 – 0038
4	6/1/05	Order Setting Oral Argument (Opinion and Findings; Order), C-3429	0039 - 0040
5	6/6/05	Sprint's Response to SENTCO's Motion for Commission to Act as Arbitrator, C-3429	0041 – 0043
6	6/14/05	Motion Granted (Opinion and Findings; Order), C-3429; 6/15/05 Certification of Order	0044 – 0046
7	6/15/05	Order Setting Prehearing Conference, C-3429; Certification of Order	0047 – 0048
8	6/17/05	Motion to Dismiss or, in the Alternative, Response of Southeast Nebraska Telephone Company to Petition for Arbitration, C-3429	0049 – 0098
9	7/12/05	Protective Order, C-3429; 7/15/05 Amended Certification of Order	0099 – 0109
10	7/25/05	Southeast Nebraska Telephone Company's Exhibit Designations, C-3429	0110 – 0112

Tab No.	Date Filed	Document Filed	Bates Range
11	7/27/05	Direct Testimony of James R. Burt, C-3429	0113 – 0149
12	7/29/05	Sprint Communications Company L.P.'s Motion in Limine and Request to Exclude Discovery and Documents Identified by Southeast Nebraska Telephone Company, C-3429	0150 - 0179
13	8/3/05	Pre-Filed Rebuttal Testimony of Steven E. Watkins, C-3429	0180 – 0226
14	8/5/05	Response of Southeast Nebraska Telephone Company to Sprint Communications Company L.P. Motion in Limine	0227 – 0243
15	8/5/05	Rebuttal Testimony of James R. Burt, C-3429	0244 – 0251
16	8/5/05	Hearing Officer Order (Opinion and Findings; Order), C-3429; 8/8/05 Certification of Order	0252 – 0254
17	8/9/05	Hearing Officer Order (Opinion and Findings; Order), C-3429; Certification of Order	0255 – 0256
18	8/9/05	Response of Southeast Nebraska Telephone Company to Sprint Communication L.P. Motion to Strike, C-3429	0257 – 0265
19	8/10/05	Sprint Communications Company L.P.'s Motion to Strike Rebuttal Testimony of Steven E. Watkins and Exhibits Thereto, C-3429	0266 – 0275
20	8/16/05	Transcript of Proceedings before the Nebraska Public Service Commission on 8/10/05, C-3429	0276 - 0432
21	8/16/05	Certification of Court Reporter (listing Exhibits made part of Transcript of Proceedings before the Nebraska Public Service Commission on 8/10/05, C-3429)	0433
22	8/16/05	8/10/05 Hearing Exhibit PSC 1 (*The Daily Record*, 5/27/05, p.8: New Public Notices NPSC, including C-3429)	0434
23	8/16/05	8/10/05 Hearing Exhibit PSC 2 (6/29/05 Certification of 6/28/05 Order, C-3429, with attached Order)	0435 – 0439
24	8/16/05	8/10/05 Hearing Exhibit Sprint 102 (7/25/05, Direct Testimony of James R. Burt, C-3429)	0440 – 0471
25	8/16/05	8/10/05 Hearing Exhibit Sprint 103 (8/3/05, Rebuttal Testimony of James R. Burt, C-3429)	0472 – 0479
26	8/16/05	8/10/05 Hearing Exhibit Sprint 104 (6/28/05, Planning Conference Order: Opinion and Findings; Order, C-3429)	0480 – 0483
27	8/16/05	8/10/05 Hearing Exhibit Sprint 105 (8/5/05, Hearing Officer Order: Opinion and Findings; Order, C-3429)	0484 – 0485

Volume II

Tab No.	Date Filed	Document Filed	Bates Range
28	8/16/05	8/10/05 Hearing Exhibit Sprint 106 (not dated, Current Network Configuration Serving Subscribers in Lincoln, NE, Exhibit JRB-1)	0486 – 0487
29	8/16/05	8/10/05 Hearing Exhibit Sprint 107 (not dated, Network Configuration Envisioned to Serve Subscribers in Falls City, NE Compared to Existing Network in Lincoln, NE, Exhibit JRB-2)	0488
30	8/16/05	8/10/05 Hearing Exhibit Sprint 108 (Affidavit of Jeffrey Woosley)	0489
31	8/16/05	8/10/05 Hearing Exhibit SENTCO 1 (5/20/05, Petition for Arbitration of Sprint Communications Company L.P.; Exhibit 1: 12/22/04 letter from Paul M. Schudel, Woods & Aitken LLP, to Monica M. Barone, Esq. [Sprint, discussing steps to address before negotiation of an interconnection agreement]; Exhibit 2: [proposed] Interconnection and Reciprocal Compensation Agreement Between Southeast Nebraska Telephone Company and Sprint Communications, L.P.)	0490 – 0523
32	8/16/05	8/10/05 Hearing Exhibit SENTCO 2 (6/17/05, Motion to Dismiss Or, in the Alternative, Response of Southeast Nebraska Telephone Company to Petition for Arbitration, C-3429)	0524 – 0573
33	8/16/05	8/10/05 Hearing Exhibit SENTCO 3 (7/25/04, Pre-Filed Direct Testimony of Elizabeth A. Sickel with attached 7/25/04 Southeast Nebraska Telephone Company's Exhibit Designations, C-3429)	0574 – 0588
34	8/16/05	8/10/05 Hearing Exhibit SENTCO 4 (1/12/05 letter from Paul M. Schudel, Woods & Aiken LLP, to Monica M. Barone, Esq. [Sprint, detailing SENTCO's unanswered questions, attaching email and U.S. mail correspondence between Sprint and SENTCO, a copy of his 12/15/04 letter to the Commission re: C-3228, and suggesting a meeting between Sprint and SENTCO facilitated by representatives of the Commission and/or its Staff to discuss the nature of the interconnection arrangement Sprint seeks from SENTCO])	0589 – 0604
35	8/16/05	8/10/05 Hearing Exhibit SENTCO 5 (7/16/04, [Sprint's] Amended Application, Application No. 3204)	0605 – 0613
36	8/16/05	8/10/05 Hearing Exhibit SENTCO 6 (9/21/04, Sprint's Responses to Inte[r]venors' Data Requests, C-3204)	0614 – 0621

Tab No.	Date Filed	Document Filed	Bates Range
37	8/16/05	8/10/05 Hearing Exhibit SENTCO 8 (10/1/04, Testimony of James R. Burt on Behalf of Sprint, C-3204)	0622 – 0632
38	8/16/05	8/10/05 Hearing Exhibit SENTCO 10 (11/4/04, Transcript of Proceedings, C-3204, not verified by Reporter)	0633 – 0790
39	8/16/05	8/10/05 Hearing Exhibit SENTCO 12 (6/17/04, Application and Request for Authority *In the Matter of the Application of Time Warner Cable Information Services (Nebraska), LLC d/b/a Time Warner Cable for a Certificate of Authority to Provide Local and Interexchange Voice Services within the State of Nebraska*	0791 – 0834
40	8/16/05	8/10/05 Hearing Exhibit SENTCO 13	0835 – 0850
41	8/16/05	8/10/05 Hearing Exhibit SENTCO 14	0851 – 0862
42	8/16/05	8/10/05 Hearing Exhibit SENTCO 16 (9/17/04, Transcript of Proceedings re: Application No. C-3228, not verified by Reporter)	0863 – 0967
43	8/16/05	8/10/05 Hearing Exhibit SENTCO 18 (8/16/99-3/8/02, Tariff Schedule Applicable to Local Exchange Services Within the State of Nebraska Issued by Sprint Communications Company L.P., Nebraska Public Service Commission Local Exchange Tariff No. 1)	0968 – 1079
44	8/16/05	8/10/05 Hearing Exhibit SENTCO 19 (6/15/05, Time Warner Cable Information Services (Nebraska), LLC d/b/a Time Warner Cable, Nebraska Rules and Regulations and Schedule of Charges Applicable to Local and Interexchange Services, Nebraska P.S.C. Tariff No. 1)	1080 – 1126
45	8/16/05	8/10/05 Hearing Exhibit SENTCO 21 (7/29/05 letter from Brad A. Gasper, Sprint, to NPSC with attached 8/1/05 Sprint Communications Company, L.P. Nebraska Tariff P.S.C. No. 2 [introducing intrastate access service offered by Sprint's Competitive Local Exchange Carrier (CLEC)]).	1127 – 1243
46	8/16/05	8/10/05 Hearing Exhibit SENTCO 22 (8/3/05, Pre-Filed Rebuttal Testimony of Steven E. Watkins, C-3429)	1244 – 1290

Tab No.	Date Filed	Document Filed	Bates Range
47	8/16/05	8/10/05 Hearing Exhibit SENTCO 23 (8/9/05, notarized Certificate of NPSC Accountant John Burvainis [re: Sprint's Nebraska Tariff P.S.C. No. 1, that Sprint has no other tariff currently on file with the Commission; re: Time Warner Cable's Nebraska P.S.C. Tariff No. 1; that Time Warner has no other tariff currently on file with the Commission], C-3429)	1291 - 1292
48	8/16/05	8/10/05 Hearing Exhibit SENTCO 24 (8/9/05, notarized Certificate of NPSC Administrative Assistant Anne Bogus [attesting to accuracy and completeness of certain records and files relating to C-3204])	1293 – 1294
49	8/16/05	8/10/05 Hearing Exhibit SENTCO 25 (8/9/05, notarized Certificate of NPSC Administrative Assistant Anne Bogus [attesting to accuracy and completeness of certain records and files relating to C-3204])	1295 – 1296
50	8/17/05	Hearing Officer Order (Opinion and Findings; Order), C-3429; Certification of Order	1297 – 1299
51	9/2/05	Post-Hearing Brief of Southeast Nebraska Telephone Company, C-3429	1300 – 1320
52	9/2/05	[Southeast Nebraska Telephone Company's] Proposed Order-Interconnection Agreement Approved as Modified) , C-3429	1321 – 1341
53	9/9/05	Post-Hearing Brief of Sprint Communications Company L.P. , C-3429	1342 – 1434
54	9/9/05	Sprint Communications Company L.P.'s Proposed Order, C-3429	1435 – 1444
55	9/13/05	Findings and Conclusions; Order, C-3429; Certification of Order	1445 – 1460
56	10/11/05	Letter to NPSC with attached fully executed Interconnection and Reciprocal Compensation Agreement Between Southeast Nebraska Telephone Company and Sprint Communications L.P., C-3429	1461 – 1481
57	10/25/05	Notice of C-3429 application and public meeting 11/1/05	1482
58	11/2/05	Post-Decision Statement of Sprint Communications Company L.P. Concerning Interconnection Agreement To Be Approved Pursuant to Commission's September 13, 2005 Order, C-3429	1483 – 1486
59	11/2/05	Statement of Southeast Nebraska Telephone Company Concerning Interconnection Agreement To Be Approved Pursuant to Commission's September 13, 2005 Order	1487 – 1489
60	11/22/05	Opinion and Findings; Order; Certification of Order	1490 - 1492

The Record on Appeal shall also include a separate volume titled "Stipulated Confidential Record on Appeal" containing the following two documents:

Tab No.	Date Filed	Document Filed	Bates Range
1	8/16/05	8/10/05 Hearing Exhibit SENTCO 20 (7/18/05, Sprint Communications Company L.P.'s Responses to Southeast Nebraska Telephone Company's First Set of Interrogatories, Requests to Produce Documents and Requests for Admissions with attached unsealed envelope marked "[Confidential Attachments to Sprint Communications Company L.P. Responses to Data Requests]" containing two Wholesale Voice Services Agreements, and attached 10/8/04 Interconnection Agreement Between ALLTEL Nebraska, Inc. & Sprint Communications Company L.P., C-3429)	0001 Confidential – 0531 Confidential
2	8/16/05	8/10/05 Hearing Exhibit SENTCO 7 [Submitted in an envelope marked "Confidential"]	0532 Confidential – 0533 Confidential

Although plaintiff Sprint is e-filing this stipulation, due to the size of the stipulated record, the stipulated record need not be e-filed and instead Sprint has made arrangements to have a copy of the stipulated record and a copy of this stipulation delivered to the Clerk of the Court.

Dated: January 17, 2005

SPRINT COMMUNICATIONS COMPANY L.P.

By: s/

Raymond A. Cardozo, CA #173263
REED SMITH LLP
Two Embarcadero Center, Suite 2000
San Francisco, CA 94111
Tel:(415) 543-8700
Fax:(415) 391-8269
E-mail: rcardozo@reedsmith.com

Its Attorney

Dated: January 17, 2005

NEBRASKA PUBLIC SERVICE COMMISSION, FRANK E. LANDIS, JR., ANNE C. BOYLE, LOWELL JOHNSON, ROD JOHNSON AND GERALD L. VAP, Commission Defendants

By: s/

L. Jay Bartel, #17247
Assistant Attorney General
2115 State Capitol
Lincoln, NE 68509-8920
Tel: (402) 471-2682
E-mail: jay.bartel@ago.ne.gov

Their Attorney

Dated: January 17, 2005

SOUTHEAST NEBRASKA TELEPHONE COMPANY, Defendant/Intervenor

By: s/

Paul M. Schudel, #13723
James A. Overcash, #18627
WOODS & AITKEN LLP
301 South 13th Street, Suite 500
Lincoln, NE 68508
Tel: (402) 43607599
E-mail: pschudel@woodsaitken.com
E-mail: jovercash@woodsaitken.com

Its Attorneys

RECEIVED
AUG 16 2005
NPSC-Comm. Dept.

BEFORE THE NEBRASKA PUBLIC SERVICE COMMISSION

IN RE:	)	Application No.
	)	C-3429
SPRINT COMMUNICATIONS COMPANY	)	
L.P. PETITION FOR ARBITRATION	)	EXHIBITS
UNDER THE TELECOMMUNICATIONS	)	VOLUME II
ACT.	)	

I hereby certify that this Volume contains Exhibits PSC 1 and 2, Sprint Nos. 102 through 108 and SENTCO Nos. 1 through 8, 10, 12 through 14, 16, 18 through 25 offered in evidence in the above-entitled case, tried on August 10, 2005, at Lincoln, Nebraska, before the Public Service Commissioners, and the same are hereby made a part of the transcript prepared by me in said case.

Dated this 16th day of August, 2005.

Court Reporter

STATE OF NEBRASKA
NEW PUBLIC NOTICES
NEBRASKA
PUBLIC SERVICE COMMISSION
300 The Atrium, 1200 N Street, P.O. Box 94927
Lincoln, Nebraska 68509

The following application(s) may be inspected at the office of the Nebraska Public Service Commission during regular office hours. Interventions must be filed with the Commission in the manner and within the time prescribed in Section 14 of the Rules of Commission Procedure, Title 291, NAC Chapter 1.

C-3429 Sprint Communications Company L.P. (Sprint), Overland, Kansas, petition for arbitration under the Telecommunications Act, of certain issues associated with the proposed interconnection agreement between Sprint and Southeast Nebraska Telephone Company.

C-3430 In the Matter of Qwest Corporation, Denver, Colorado, seeking expedite for design services amendment to the interconnection agreement with AT&T Communications of the Midwest, Inc., Denver, Colorado, and TCG Omaha, Denver, Colorado.

5-27-05

protest ends 6-27-05

New Public Notices

City of Omaha

ALL REQUESTS FOR SIGN LANGUAGE INTERPRETERS (SIGNERS) WILL REQUIRE A MINIMUM OF 48 HOURS ADVANCE NOTICE.

IF ALTERNATIVE FORMATS ARE NEEDED, ALL REQUESTS WILL REQUIRE A MINIMUM OF 72 HOURS ADVANCE NOTICE.

PLEASE NOTIFY BUSTER BROWN - CITY CLERK - 444-5557, IF ARRANGEMENTS NEED TO BE MADE.

"NOTICE TO PUBLIC"
"NOTICE OF HEARING FOR AN AFTER-HOURS DANCE PERMIT LOCATED AT 10909 "M" STREET"

Application by Sumana Hospitality, LLC dba "Days Hotel" requesting issuance of an after-hours dance permit at 10909 "M" Street.

Public Hearing will be held before the City Council of the City of Omaha, Legislative Chambers, Omaha/Douglas Civic Center, 1819 Farnam Street, on **June 7, 2005** at 2:00 p.m.

BUSTER BROWN,
City Clerk

5-27-05

BUSTER BROWN,
City Clerk

5-27-05

Trustee's Sales

ERIC H. LINDQUIST, P.C., L.L.O.
Attorney
8712 West Dodge Road
Suite 260
NOTICE OF TRUSTEE'S SALE

TO WHOM IT MAY CONCERN:

You are hereby notified that pursuant to a power of sale contained in the deed of trust in the original principal amount of $158,800.00 executed by Margaret Irfan, a single person, which was filed for record on December 29, 2003 as Instrument No. 2003248677 of the Mortgage Records in the office of the Register of Deeds of Douglas County, Nebraska, the property described below, will be sold by the undersigned at public auction to the highest bidder for cash or certified or cashier's check, on the first floor outside the Jury Assembly Room in the Hall of Justice, 1701 Farnam Street, in the City of Omaha, Douglas County, Nebraska at 9:00 a.m. on **July 14, 2005:**

Lot 22, Block 9, Country Club District, as surveyed, platted and recorded in Douglas County, in the State of Nebraska.

The highest bidder is required to deliver cash or certified funds to the undersigned by the close of business on the day of sale, except this requirement is waived when the highest bidder is the beneficiary. The purchaser is responsible for all fees or taxes, including the documentary stamp tax. This sale is made without warranties as to title or condition of the property.

ERIC H. LINDQUIST,
Successor Trustee

f5-27&6-3,10,17&24-05

ERIC H. LINDQUIST, P.C., L.L.O.
Attorney
8712 West Dodge Road
Suite 260
NOTICE OF TRUSTEE'S SALE

TO WHOM IT MAY CONCERN:

You are hereby notified that pursuant to a power of sale contained in the deed of trust in the original principal amount of $70,550.00 executed by Lawan J. English, Trustor, which was filed for record on February 2, 2001, in Book 6312 at Page 279 of the Mortgage Records in the office of the Register of Deeds of Douglas County, Nebraska, the property described below, will be sold by the undersigned at public auction to the highest bidder for cash or certified or cashier's check, on the first floor outside the Jury Assembly Room in the Hall of Justice, 1701 Farnam Street, in the City of Omaha, Douglas County, Nebraska at 9:00 a.m. on **July 14, 2005:**

Lot 1, Bensonvale Acres Replat 4, an addition to the City of Omaha, as surveyed, platted and recorded in Douglas County, Nebraska.

The highest bidder is required to deliver cash or certified funds to the undersigned by the close of business on the day of sale, except this requirement is waived when the highest bidder is the beneficiary. The purchaser is responsible for all fees or taxes, including the documentary stamp tax. This sale is made without warranties as to title or condition of the property.

ERIC H. LINDQUIST,
Successor Trustee

f5-27&6-3,10,17&24-05

ERIC H. LINDQUIST, P.C., L.L.O.
Attorney
8712 West Dodge Road
Suite 260
NOTICE OF TRUSTEE'S SALE

TO WHOM IT MAY CONCERN:

You are hereby notified that pursuant to a power of sale contained in the deed of trust in the original principal amount of $40,000.00 executed by David N. Petrick and Nancy J. Petrick, husband and wife, which was filed for record on November 22, 1989, in Book 3433 at Page 604 of the Mortgage Records in the office of the Register of Deeds of Douglas County, Nebraska, the property described below, will be sold by the undersigned at public auction to the highest bidder for cash or certified or cashier's check, on the first floor outside the Jury Assembly Room in the Hall of Justice, 1701 Farnam Street, in the City of Omaha, Douglas County, Nebraska at 9:00 a.m. on **July 14, 2005:**

Lot 1, Oakhurst Park Replat 2, an addition to the City of Omaha, as surveyed, platted

PSC 1
8-10-05

Nebraska Public Service Commission

COMMISSIONERS:
C. BOYLE
CLL C. JOHNSON
ROD JOHNSON
FRANK E. LANDIS
GERALD L. VAP

EXECUTIVE DIRECTOR:
ANDY S. POLLOCK

300 The Atrium, 1200 N Street, Lincoln, NE 68508
Post Office Box 94927, Lincoln, NE 68509-4927
Website: www.psc.state.ne.us
Phone: (402) 471-3101
Fax: (402) 471-0254

NEBRASKA CONSUMER HOTLINE:
1-800-526-0017

June 29, 2005

CERTIFICATION

To Whom It May Concern:

I, Andy S. Pollock, Executive Director of the Nebraska Public Service Commission, hereby certify that the enclosed is a true and correct copy of the original order made and entered in C-3429 on the 28th day of June 2005. The original order is filed and recorded in the official records of the Commission.

IN TESTIMONY WHEREOF, I have hereunto set my hand and affixed the Seal of the Nebraska Public Service Commission, Lincoln, Nebraska, this 28th day of June 2005.

Sincerely,

Andy S. Pollock
Executive Director

ASP:dk

Enclosure

cc: Diane C. Browning, 6450 Sprint Parkway, Mailstop KSOPHN0212-2A511, Overland Park, KS 66251
Bradford E. Kistler, Kinsey RIdenouer Becker & Kistler, LLP, 601 Lincoln Square, 121 S. 13th St., Lincoln, NE 68501
Elizabeth A. Sickel, Southeast Nebraska Telephone Co., 110 W. 17th St., Falls City, NE 68355
Paul M. Schudel, Woods & Aiken, LLP, 301 S. 13th St., Ste. 500, Lincoln, NE 68508

0435

PSC 2
Ln 8-10-05

Printed with soy ink on recycled paper

BEFORE THE NEBRASKA PUBLIC SERVICE COMMISSION

In the Matter of Sprint Communications Company L.P., Overland Park, Kansas, Petition for arbitration under the Telecommunications Act, of certain issues associated with the proposed interconnection agreement between Sprint and Southeast Nebraska Telephone Company, Falls City.	)	Application No. C-3429 PLANNING CONFERENCE ORDER Entered: June 28, 2005

BY THE HEARING OFFICER:

O P I N I O N A N D F I N D I N G S

On June 22, 2005, a planning conference was held in the Commission Library, Lincoln Nebraska. Ms. Diane Browning appeared for Sprint Communications Company L.P. (Sprint) by telephone. Mr. James Overcash and Mr. Paul Schudel appeared for Southeast Nebraska Telephone Company (SENTCO). SENTCO and Sprint may collectively be referred to below as the "Parties."

In response to Sprint's Petition, SENTCO filed on or about June 17, 2005 a Motion to Dismiss or, in the Alternative, Response to the Petition. Without waiving SENTCO's positions in the Motion to Dismiss and Response, the Parties have agreed that the issues raised therein will be resolved in conjunction with the Commission's decision in this proceeding after the presentation of evidence, hearing, and submission of proposed orders/briefs under the schedule set forth below. Accordingly, the Commission will not hold a separate hearing on the Motion to Dismiss, and Sprint is not required to respond to the Motion to Dismiss. Instead, the Commission will address the Motion to Dismiss and any opposition thereto as part of its decision in this matter. In establishing this procedure, the Commission specifically notes that all arguments raised in the Motion to Dismiss are preserved and that the Parties may address and respond to those arguments as part of the post-hearing proposed orders/briefs to be submitted to the Commission following the hearing. Moreover, the Parties' agreement does not prevent either of them from raising additional arguments or assertions that arise out of the presentation of evidence or the record from the hearing on Sprint's Petition.

Printed with soy ink on recycled paper

Accordingly, pursuant to the discussions at the planning conference the following schedule was agreed upon by the parties:

Event	Date
Serve Discovery	June 28, 2005
Objections to Discovery Served	July 5, 2005
Hearing on Objections	July 6, 2005 at 1:30 p.m.
Order on Objections	July 8, 2005
Responses to Discovery Served	July 14, 2005
Prefiled Direct Testimony and corresponding Exhibits	July 25, 2005
Prefiled Rebuttal Testimony and corresponding Exhibits	August 3, 2005
Proposed Order/Brief Submission deadline	September 2, 2005

0437

Any exhibits to be utilized at hearing solely for impeachment purposes need not be prefiled.

The parties agreed to limit the scope of discovery. The number of interrogatories to be served is limited to twenty (20). The number of document requests shall be limited to five (5). The number of requests for admissions shall be limited to ten (10).

Service of discovery, objections, testimony, exhibits and briefs by electronic mail shall be required. Email service of relevant documents by 5:00 p.m. CDT on the dates set forth above shall be deemed timely. Paper copies of all materials served by email shall be provided by regular U.S. Mail.

The hearing in this matter will be held in the Commission Hearing Room, 300 The Atrium Building, 1200 N Street, Lincoln, Nebraska on August 10, 2005 at 10:00 a.m. The Commission

Printed with soy ink on recycled paper

expects to release its decision on September 13, 2005 which is prior to the nine month deadline set forth in section 252(b)(4)(C) of the Telecommunications Act of 1996.

O R D E R

IT IS THEREFORE ORDERED by the Hearing Officer that the foregoing procedural schedule be and it is hereby adopted.

MADE AND ENTERED at Lincoln, Nebraska this 28th day of June, 2005.

NEBRASKA PUBLIC SERVICE COMMISSION

By: _____
Hearing Officer

Printed with soy ink on recycled paper

Printed with soy ink on recycled paper

BEFORE THE NEBRASKA PUBLIC SERVICE COMMISSION

DIRECT TESTIMONY

OF

JAMES R. BURT

Application No. C-3429

July 25, 2005

0440

PENGAD 800-631-6989
EXHIBIT
102
8-10-05

TABLE OF CONTENTS

		PAGE
I.	Mr. Burt's professional background.	1
II.	This testimony describes the type of telecommunications service Sprint proposes to provide in SENTCO's serving territories, the network Sprint will use to provide this service, and how Sprint qualifies for interconnection under the Telecommunications Act of 1996.	3
III.	Sprint's business model proposes to bring a new competitive voice service to SENTCO's serving territories.	4
IV.	Sprint's business model utilizes the combined resources of two service providers to bring cost-effective new voice telecommunications services to Nebraska customers sooner than if either service provider attempted to provide the service alone.	5
V.	Sprint's business model is wholly consistent with the pro-competition goals of Telecommunications Act of 1996.	10
VI.	In the Sprint business model, Sprint provides the same switching and interconnection capabilities that it provides for its other telecommunications services, while the loop connection to the customer is provided by another service provider.	15
VII.	Under Sprint's business model, the customer receives a voice service, not a cable modem service or an Internet Telephony (VoIP) service.	17
VIII.	Sprint is entitled to reciprocal compensation from SENTCO for the voice calls that SENTCO's customers terminate on the Sprint network.	19
IX.	The Commission already has approved at least one arrangement similar to the one for which Sprint is seeking interconnection with SENTCO.	22
X.	Sprint offers its services indiscriminately.	24
XII.	Sprint has attempted to negotiate with SENTCO an interconnection agreement that is similarly situated to SENTCO's existing approved agreement with SENTCO.	27
XII.	Sprint's position on arbitration issues 1 and 2.	30

1 **I. MR. BURT'S PROFESSIONAL BACKGROUND**

2 **Q. Please state your name, business address, employer and current position.**

3 A. My name is James R. Burt. My business address is 6450 Sprint Parkway,
4 Overland Park, KS 66251. I am employed as Director – Regulatory Policy for
5 Sprint/United Management Company.
6

7 **Q. Please summarize your educational and professional background.**

8 A. I received a Bachelor of Science degree in Electronics Engineering from the
9 University of South Dakota in 1980 and a Masters in Business Administration
10 from Rockhurst College in 1989.
11

12 I became Director – Regulatory Policy in February of 2001. I am responsible for
13 developing state and federal regulatory policy and legislative policy for Sprint
14 Corporation, including the coordination of regulatory and legislative policies
15 across the various Sprint business units and the advocacy of such policies before
16 regulatory and legislative bodies.
17

18 From 1997 to February of 2001, I was Director-Local Market Planning. I was
19 responsible for policy and regulatory position development and advocacy from a
20 CLEC perspective. In addition, I supported Interconnection Agreement
21 negotiations and had responsibility for various other regulatory issues pertaining
22 to Sprint's CLEC efforts.
23

24 From 1996 to 1997, I was Local Market Director responsible for Sprint's
25 Interconnection Agreement negotiations with BellSouth.
26
27 I was Director – Carrier Markets for Sprint's Local Telecom Division from 1994
28 to 1996. My responsibilities included inter-exchange carrier account management
29 and management of one of Sprint's Inter-exchange Carrier service centers.
30
31 From 1991 to 1994, I was General Manager of United Telephone Long Distance,
32 a long distance subsidiary of Sprint/United Telephone Company. I had P&L,
33 marketing and operations responsibilities.
34
35 From 1989 to 1991, I held the position of Network Sales Manager responsible for
36 sales of business data and network solutions within Sprint's Local Telecom
37 Division.
38
39 From 1988 to 1989, I functioned as the Product Manager for data and network
40 services also for Sprint's Local Telecom Division.
41
42 Prior to Sprint I worked for Ericsson Inc. for eight years with positions in both
43 engineering and marketing.
44

45 **Q. Have you testified before any regulatory commissions?**

46 A. Yes. I have testified in Georgia, Louisiana, Pennsylvania, Maryland, Illinois,
47 Nebraska, Florida and Iowa, and have supported the development of testimony in
48 many other states.

49

50 **Q. On whose behalf are you testifying?**

51 A. I'm testifying on behalf of Sprint Communications Company L.P (hereafter
52 referred to as "Sprint").

53

54 **II. THIS TESTIMONY DESCRIBES THE TYPE OF**
55 **TELECOMMUNICATIONS SERVICE SPRINT PROPOSES TO**
56 **PROVIDE IN SENTCO'S SERVING TERRITORIES, THE NETWORK**
57 **USED TO PROVIDE THIS SERVICE, AND HOW SPRINT QUALIFIES**
58 **FOR INTERCONNECTION UNDER THE TELECOMMUNICATIONS**
59 **ACT OF 1996.**
60

61 **Q. What is the purpose of your testimony?**

62 A. The purpose of my testimony is to:

63 • Describe the facilities-based local voice telephone service that Sprint, together
64 with other competitive service providers such as Time Warner Cable
65 ("TWC"), seeks to offer to all customers of such services in Nebraska, and
66 more specifically, the areas served by Southeast Nebraska Telephone
67 Company ("SENTCO").

68 • Explain to the Commission the precise manner in which Sprint and the other
69 service providers plan to cooperate to offer competitive local voice service to
70 customers in SENTCO local service territories, to explain to the Commission

71 that the service is not a private service, but will be offered to the public,
72 without restriction, and to explain that Sprint intends to offer its
73 interconnection services to all entities in the applicable class (i.e., all entities
74 who desire the services and who have comparable "last mile" facilities to the
75 cable companies);

76 • Describe the network configuration Sprint plans to utilize to serve customers
77 in SENTCO's local service areas;

78 • Explain the policy reasons why Sprint believes that the business model it
79 seeks to employ with TWC to allow facilities-based local voice services to be
80 offered in competition with SENTCO supports the pro-competitive purposes
81 of the Communications Act of 1934, as amended by the Telecommunications
82 Act of 1996, 47 U.S.C. §151 *et seq.* (the "Act");

83 • Contrast the nature of Sprint's services with cable modem Internet services
84 and Voice Over Internet Protocol ("VoIP") services; and

85 • Address Sprint's positions as to Arbitration Issues 1 and 2.

86

87 **III. SPRINT'S BUSINESS MODEL PROPOSES TO BRING A NEW**
88 **COMPETITIVE VOICE SERVICE TO SENTCO'S SERVING**
89 **TERRITORIES.**
90

91 **Q. Can you describe your understanding of the current competitive**
92 **environment in SENTCO serving territories?**

93 **A:** Setting aside the discussion of the proposed services that are at issue in this
94 Arbitration proceeding, currently there is little or no competition for local voice
95 telephone services in SENTCO's serving territories. SENTCO is serving most, if

96 not all, of the customers of local voice services in its territories. The larger
97 Nebraska cities such as Lincoln and Omaha have experienced some competitive
98 local exchange carrier ("CLEC") entry, by cable companies, traditional CLECs,
99 and inter-exchange carriers ("IXCs") providing local exchange services. In
100 contrast, Nebraska's rural exchanges have seen little, if any, facilities-based
101 competition.
102
103 **Q. How will Sprint's service help introduce competition into SENTCO's serving**
104 **territories?**
105 A. The service resulting from Sprint's business model would be one of the first, if
106 not the first, competitive landline telecommunications ventures into SENTCO's
107 serving territories. In addition, the service does not require the customer to invest
108 in a broadband connection and a computer, which the customer would have to
109 purchase to utilize a Voice over Internet Protocol ("VoIP") service. Sprint
110 believes that there is a demand in those areas for services provided by carriers
111 other than SENTCO. For example, TWC provided to Sprint the attached letter
112 from a potential subscriber of the competitive local voice service (see Exhibit
113 JRB-3).
114
115 **IV. SPRINT'S BUSINESS MODEL UTILIZES THE COMBINED**
116 **RESOURCES OF TWO SERVICE PROVIDERS TO BRING COST-**
117 **EFFECTIVE NEW VOICE TELECOMMUNICATIONS SERVICES TO**
118 **NEBRASKA CUSTOMERS SOONER THAN IF EITHER SERVICE**
119 **PROVIDER ATTEMPTED TO PROVIDE THIS SERVICE ALONE.**
120

121 **Q. Please describe the business model that Sprint has chosen to bring local voice**
122 **telephone services to Nebraska consumers in SENTCO's serving territories.**
123 **A.** Sprint has chosen to combine and leverage resources, capabilities, expertise,
124 assets and market position with other competitive service providers, including
125 TWC, to bring facilities-based competitive voice services to consumers in
126 Nebraska. These services are positioned to compete directly with urban and rural
127 ILEC services. The model is simple. Sprint provides switching; public switched
128 telephone network ("PSTN") interconnectivity including all inter-carrier
129 compensation; numbering resources, administration and porting; domestic and
130 international toll service; operator and directory assistance and numerous back-
131 office functions. In this case, TWC provides last-mile facilities to the customer
132 premise (commonly referred to as the loop), sales, billing, customer service, and
133 installation. This business model has proven to be effective in providing over
134 400,000 consumers a viable alternative to their ILEC service in 13 states. Sprint
135 is providing these services under approved interconnection agreements in Kansas,
136 Missouri, Minnesota, Illinois, Wisconsin, Ohio, Mississippi, Louisiana, Michigan,
137 Texas, New Jersey and New York. In addition, other carriers (for example, MCI)
138 are providing similar services under approved interconnection agreements in other
139 states, including Ohio, California, North Carolina, South Carolina, Tennessee and
140 Hawaii. Sprint continues to look for additional relationships similar to those
141 already established by it and competitors seeking to compete with ILECs to
142 provide local exchange services.
143

144 **Q. Please explain the relationship between Sprint and TWC in providing the**
145 **proposed voice service to Nebraska customers.**
146 A. Sprint and TWC have entered into a contract to provide facilities-based
147 competitive local and long distance voice service within several markets already
148 receiving cable TV and broadband services from TWC. These markets
149 encompass several states and include the State of Nebraska. Within the State of
150 Nebraska, TWC operates primarily in the ILEC franchise territories of Alltel,
151 Qwest, Citizens and SENTCO. To a much smaller degree TWC operates in the
152 franchise territories of four other small independent telephone companies. In fact,
153 Sprint is currently providing services identical to those it seeks to provide in
154 SENTCO territory in Lincoln, Nebraska with TWC and under an interconnection
155 agreement with Alltel. In Lincoln alone, the Sprint/TWC service has over 4,000
156 customers. In general, the business model, as Sprint refers to this arrangement,
157 requires Sprint to perform certain duties and TWC to perform certain duties.
158 Together, Sprint and TWC provide the network and functions necessary for the
159 retail offering of these competitive telecommunications services. I will discuss
160 more specifics of this business model later in my testimony.
161
162 **Q: As to the services proposed to be offered, are Sprint and TWC each the agent**
163 **of the other party?**
164 A: Although SENTCO would like to assert that Sprint and TWC must be "agents" of
165 each other, this assertion is mis-directed. As explained below, both Sprint and
166 TWC have independent obligations under their contract to provide parts of their

167 network and expertise to provide the competitive local voice products to
168 customers in SENTCO's serving territory. But as a regulated provider of toll
169 services and interexchange services in Nebraska, Sprint is required to abide by all
170 relevant regulations, orders, resolutions, and legal requirements established by the
171 Commission and the Federal Communications Commission ("FCC"). In addition,
172 the contract between Sprint and TWC obligates Sprint to abide by all local, state,
173 and federal laws and regulations and to obtain, file, and maintain all Regulatory
174 Requirements (as that term is defined by the contract) as may be required by any
175 governmental authority having jurisdiction over its business.
176
177 **Q. Why have Sprint and TWC chosen this business model?**
178 A. While I do not speak for TWC, I believe that one of the more important reasons
179 why Sprint and TWC have chosen this business model are because it capitalizes
180 on the resources and capabilities of both companies to allow for market entry far
181 sooner than if either TWC or Sprint were to attempt to enter the market alone.
182
183 **Q. What resources does Sprint contribute to this business model?**
184 A. For its part, Sprint has switches capable of providing competitive local and long
185 distance voice services, a nationwide long distance network consisting of
186 transport facilities and switches, knowledge of CLEC services, experience in
187 interconnection, number portability, dialing parity, inter-carrier compensation, an
188 operator services platform, etc., but it does not have facilities directly to the
189 customer premises in certain areas such as the SENTCO serving territory. It

190 would be expensive for Sprint to duplicate the loop facilities maintained by
191 ILECS such as SENTCO or the "loop like" facilities such as those maintained by
192 TWC, and difficult to do so using unbundled network elements ("UNEs").
193 Accordingly, the synergies of the proposed Sprint/TWC model are obvious.
194 TWC has last-mile facilities consisting of their Hybrid Fiber Coax ("HFC")
195 network and existing relationships with current video and high-speed Internet
196 customers. Sprint has over a hundred years of experience in the voice
197 telecommunications market, a robust long distance network, switches and other
198 equipment with connections to the PSTN, and years of experience negotiating
199 interconnection and provisioning facilities-based competitive voice service.
200
201 **Q. What resources does TWC contribute to this business model?**
202 **A.** TWC has facilities to customer premises and existing relationships with
203 customers. On the other hand, it is Sprint's understanding that TWC does not
204 have many of the network elements and systems to allow voice
205 telecommunications service to be provided over those facilities in ways that are
206 indistinguishable to users from Plain Old Telephone Service ("POTS"). TWC
207 does not have a switch, has not negotiated interconnection agreements with
208 ILECs, does not have a nationwide long distance network, does not have the
209 systems to bill reciprocal compensation or exchange access, and did not desire to
210 hire or develop the necessary expertise to perform many of the functions required
211 to operate a competitive local exchange carrier.
212

213 **Q. What customer benefit will result from implementation of the business model**

214 **described above?**

215 A. Implementation of this business model permits Nebraska customers in SENTCO's

216 serving areas to have a meaningful alternative for local telephone services The

217 presence of that choice, alone, might produce competitive advantages to

218 customers in the form of lower prices and better services as competitors respond

219 to the new competition offered through this business model.

220

221 **V. SPRINT'S BUSINESS MODEL IS WHOLLY CONSISTENT WITH THE**
222 **PRO-COMPETITION GOALS OF TELECOMMUNICATIONS ACT OF**
223 **1996.**

224

225 **Q. Is the business model described above consistent with the intent and**

226 **structure of the Act as you understand it?**

227 A. Yes. Although the business model described above may not be the only way to

228 bring competitive facilities-based services to customers in SENTCO territory, it is

229 a legitimate business model which qualifies for interconnection under the Act.

230 The business model being utilized by Sprint and TWC is consistent with my

231 understanding of the intent of the Act. As shown in the Preamble of the Act itself,

232 and in sections like Section 157, one of Congress' primary purposes in passing the

233 Act was to encourage competition in the local marketplace and to encourage the

234 provision of new technologies and services to the public. Sprint seeks to do just

235 that. The Act gives potential competing local exchange carriers the option: (i) of

236 self-provisioning service, (ii) reselling the telecommunications services of an

237 ILEC or other local exchange carrier, or (iii) purchasing unbundled network

238 elements from an ILEC and providing services though the use of these "leased"
239 elements.

240 **Q. Is the business model at issue here consistent with the three forms of**
241 **competition contemplated by the Act? Please explain.**

242 A. Yes, the business model at issue here is consistent with these three forms of
243 competition, because the Act gives new entrants considerable flexibility to choose
244 whether to use any or all of the three identified methods. A competitive entrant
245 may use resale of another carrier's services entirely, or may provide each of the
246 network elements itself by building out an entire duplicative network that mirrors
247 the ILEC traditional monopoly network facilities. On the other hand, new
248 entrants may seek a combined approach, where the carrier provides some, but not
249 all, of the network itself, and relies upon other carriers to provide other parts of
250 the network. The business model is an example of the "combined" approach
251 where some portion of facilities essential to permit local exchange services is
252 provided by Sprint and another service provider such as TWC. The end result,
253 however, is the same. The customer is permitted to place or receive a telephone
254 call from his or her premises over the PSTN. The customer thus has a choice
255 whether to use SENTCO or Sprint and another service provider such as TWC to
256 receive such services.

257

258 **Q. Before discussing the specific Sprint/TWC arrangement, can you please**
259 **describe the network elements or functions that a competitive entrant must**
260 **obtain in order to provide local service.**

261 A. In its simplest form, a competitive entrant must obtain three network elements or
262 functions in order to provide local service: (1) it must have access to a connection
263 to the customer premise, e.g., the last mile or the loop; (2) it must have access to
264 an end office switching function; and (3) it must be able to interconnect to the
265 PSTN which allows the calls to be routed to and from the called and calling
266 parties.
267
268 **Q. You stated above that a competitive entrant has various choices in how it**
269 **obtains each of three network elements or functions you just described.**
270 **Please explain.**
271 A. Yes. As I mentioned above, the Act gives competitive entrants flexibility in how
272 it obtains these three network elements or functions. It can provide them itself or
273 it can outsource them to other telecommunications carriers or the ILEC. For
274 example, to get to the customer premise, a competitive entrant can build and use
275 its own loop, purchase the loop from an ILEC, or purchase it from another service
276 provider. The same is true for switching and interconnection; the CLEC can self-
277 provision these capabilities or purchase them from the ILEC or another service
278 provider.
279
280 **Q. Please provide an example of how a competitive voice provider is allowed**
281 **under the Act to enter the market through the exclusive use of another**
282 **entity's network.**

283 A. There are two examples of how a competitive entrant can use the network
284 elements or functions of another entity exclusively. The first is called the
285 "Unbundled Network Element Platform," commonly referred to as UNE-P. The
286 second is resale. UNE-P is typically purchased from the ILEC. A competitive
287 entrant purchases all the network elements and functions from the ILEC,
288 combines them, brands the service as its own, and provides and bills the
289 completed service at retail to its customers. The second example involves a
290 CLEC which provides services through resale. There are two forms of resale:
291 resale of an ILEC's service or resale of a CLEC's service. In both forms of resale
292 instances, the competitive entrant purchases a completed service consisting of
293 loop, switching, and interconnection, re-brands the service as its own, and
294 provides it at retail to its customers.
295
296 **Q. Please expand on the resale example in which a competitive entrant**
297 **purchases a completed service from a CLEC and re-brands the service in its**
298 **own name for sale to its customers.**
299 A. The Act requires all local exchange carriers, including CLECs, to resell their
300 services. As a result of this requirement of the Act, a facilities-based CLEC
301 owning its own switch and provisioning its own local interconnection trunks
302 pursuant to a Section 251 interconnection agreement with an ILEC is required to
303 resell its service, including the local interconnection function, to any other
304 requesting carrier. In other words, assume CLEC 'A' is a facilities-based CLEC
305 with its own switch interconnected to the ILEC pursuant to a Section 251

306 agreement. CLEC 'B' has the right to resell the telecommunications services of
307 CLEC 'A'. The resulting situation would be a retail customer served by CLEC
308 'B' using the switch and interconnection trunks of CLEC 'A'. This is exactly
309 what Sprint and TWC have agreed to do. Therefore, the business model being
310 utilized by Sprint and TWC is consistent with a business model that is required in
311 the Telecom Act.
312
313 **Q. Please provide an example of the combined approach you mentioned above**
314 **and compare it to the Sprint/TWC arrangement.**
315 **A.** There are two forms of the combined approach I would like to describe and
316 compare to the Sprint/TWC arrangement.
317 Example 1: In over 30 markets across the United States, Sprint, as the retail
318 service provider, has purchased switching and interconnection from another
319 CLEC and purchased its own loops from the ILEC. This is comparable to the
320 Sprint/TWC arrangement in that Sprint is the retail provider (comparable to TWC
321 in the current situation) purchasing switching and interconnection from another
322 CLEC (comparable to Sprint's role in the current situation).
323 Example 2: Sprint has purchased unbundled network elements in the form of
324 UNE-P from another CLEC who has purchased them from the ILEC. Sprint is
325 providing retail service in this manner in over 30 states and the District of
326 Columbia. This is comparable to the Sprint/TWC arrangement because, again,
327 Sprint as the retail service provider has purchased the network elements and
328 functions necessary to provide a completed local service from another CLEC.

329

330 **Q. Is the provision of a retail service utilizing the combined networks of two**

331 **service providers a form of local competition authorized by the Act?**

332 A. Yes. Regardless of the scenario selected, the Act established a framework to

333 permit competitors to enter the market in a variety of ways to allow customers to

334 receive the benefits of having more choices for their telecommunications services.

335 Second, the two examples being used by Sprint that I just explained are very

336 similar to the Sprint/TWC arrangement. In both instances one carrier, Sprint, is

337 providing the retail service and another carrier is using its rights under the Act to

338 acquire UNEs and/or local interconnection and providing it to Sprint. The

339 Sprint/TWC arrangement is essentially the same but puts Sprint in the opposite

340 position of being the carrier attempting to exercise its rights to interconnect with

341 SENTCO and provide that service to TWC, the retail provider. The Sprint/TWC

342 arrangement may be the only model that will provide the consumers in

343 SENTCO's franchise territory an alternative to SENTCO itself.

344

345 **VI. IN THE SPRINT BUSINESS MODEL, SPRINT PROVIDES THE SAME**
346 **SWITCHING AND INTERCONNECTION CAPABILITIES THAT IT**
347 **PROVIDES FOR ITS OTHER TELECOMMUNICATIONS SERVICES,**
348 **WHILE THE LOOP CONNECTION TO THE CUSTOMER IS PROVIDED**
349 **BY ANOTHER SERVICE PROVIDER.**
350

351 **Q. Under this business model, which company provides the three network**

352 **elements or functions: the loop, switching and interconnection?**

353 A. The business model can be explained in terms of these three elements or functions

354 I described earlier. Sprint provides switching and interconnection, and TWC

355 provides the loop connecting the customer premises to Sprint's Class 5 end office
356 switch. A head end is the originating point of the video signals in a cable
357 television system.
358
359 **Q. Please describe the network configuration being deployed by Sprint and**
360 **TWC.**
361 **A.** Following is a description of the network configuration being deployed by Sprint
362 and TWC. Please refer to Exhibit JRB-1 for a diagram of what I am describing.
363 TWC's customers will have a device located in their home called an eMTA or
364 embedded Multi-media Terminal Adapter. This device connects the customer's
365 telephones and the coaxial cable that enters the home. The coaxial cable exits the
366 customer's home and terminates in TWC's head end where the television signals
367 are separated out from the voice telecommunications signals. A head end is the
368 originating point of the video signals in a cable television system. The voice
369 signals are routed to a device called a CMTS or Cable Modem Termination
370 System. The CMTS is connected to a PBX-like switch owned by TWC. This
371 device aggregates customer voice traffic for transmission to Sprint's Class 5 end
372 office switch. The Sprint Class 5 end office switch uses the calling party and
373 called party information to route the traffic to the appropriate destinations. For
374 example, if the calling party and called party are within the same local calling
375 area the call will be routed to the interconnection trunks between Sprint and the
376 ILEC for termination to the appropriate called party. If the customer dials 911,
377 the call is routed over the trunks Sprint has provisioned between the Sprint Class

5 end office switch to the appropriate selective router based on the physical location of the customer dialing 911. The eMTA, coaxial cable, CMTS and PBX-like switch are all provided by TWC. Sprint provides the Class 5 end office switch. The transport between the PBX-like switch and Sprint's Class 5 switch can be provided by either Sprint or TWC. Sprint is responsible for all the interconnectivity to the PSTN for the termination of local, 911, toll, operator and directory calls.

VII. UNDER SPRINT'S BUSINESS MODEL, THE CUSTOMER RECEIVES A VOICE SERVICE, NOT A CABLE MODEM SERVICE OR AN INTERNET TELEPHONY (VOIP) SERVICE.

Q: Is the proposed service a cable modem service?

A. No. The proposed service is not cable modem service, and does not provide connection to the public Internet as is the case with cable modem service. Cable modem service provides customers with high speed access to the Internet, over the fixed cable network of the cable company. In contrast, the proposed services are local voice telephone services that are indistinguishable from the Plain Old Telephone Service ("POTS") provided by SENTCO and other local exchange carriers. Customers can use the same type of telephones used by SENTCO customers. The customers of the proposed service will only be able to originate and terminate calls from the customer's premises as SENTCO's customers currently do. The proposed services do not require the customer to have a broadband Internet connection, and do not require a computer at either end of the

402 potential voice telephone call. The customer's "telephone number" is fixed to his
403 or her physical location, and therefore, the proposed services are not "mobile."

404 **Q. Is the proposed service an Internet Telephony or Voice over Internet**
405 **Protocol ("VoIP") service?**

406 A. No, the proposed service is not an Internet Telephony or VoIP service as these
407 terms are generally used in the industry. The terms Internet Telephony and/or
408 VoIP are usually used to describe voice services that utilize the public Internet.
409 An example would be the service provided by Vonage. By contrast, the proposed
410 service does not use the public Internet as its transport mechanism. Internet
411 Telephony services also tend to be nomadic services. In other words, customers
412 of Internet Telephony services can use the service wherever they have a
413 broadband Internet connection. The voice service provided by Sprint and TWC is
414 not nomadic; the customers only use the service in their homes. Internet
415 Telephony services have also struggled with providing 911 service consistent with
416 customer or public safety official expectations. The voice service provided by
417 Sprint and TWC provides reliable E-911 service in the same manner as SENTCO
418 provides E-911 to its customers.

419

420 **Q. How could any observer confuse Internet Telephony or VoIP services with**
421 **the voice service being provided by Sprint and TWC?**

422 A. There is one factor that is sometimes used to attempt to create confusion between
423 Internet Telephony or VoIP service and the voice service being provided by
424 Sprint and TWC. It is the fact that both services happen to use the Internet

425 protocol.[1] Since both services use the Internet protocol, there is a tendency to
426 claim (out of misunderstanding or convenience) the services are the same when
427 nothing could be further from the truth as I described above. The mere fact that
428 there is one technical similarity, use of the Internet protocol, should not lead one
429 to the conclusion that the services are the same. Doing so would be like saying
430 because a Lamborghini and a Ford Escort both utilize black rubber tires, they are
431 the same types of automobiles. They obviously use the same technology, i.e.,
432 black rubber tires to make contact with the road, but they are not the same type of
433 automobile. In fact, about the only substantial similarity is the fact that they are
434 both considered automobiles. This is also the case for Internet Telephony or VoIP
435 and the voice service being provided by Sprint and TWC, they are both voice
436 services, but the similarities beyond that are minimal and certainly should not be
437 confused in any way.
438

439 **VIII. SPRINT IS ENTITLED TO RECIPROCAL COMPENSATION FROM**
440 **SENTCO FOR THE VOICE CALLS THAT SENTCO'S CUSTOMERS**
441 **TERMINATE ON THE SPRINT NETWORK.**
442
443 **Q. Who owns and operates the Class 5 switch that performs the switching and**
444 **routing function and through which all calls originate and terminate to the**
445 **PSTN?**
446 A. Sprint owns the Class 5 switch that switches the residential subscribers' voice
447 calls. Sprint's switch performs all switching and routing functions for local,
448 domestic and foreign toll, emergency, operator assisted, directory assistance calls.

[1] The Internet protocol is part of the TCP/IP family of protocols that establish the rules or protocol that must be followed by devices connected to one another utilizing the protocol.

449 It is important to note that every call passing between the PSTN and the
450 customers of the service being provided pass through Sprint's switch. It is the
451 only device connected to the PSTN. This switch is identified in the Local
452 Exchange Routing Guide ("LERG") and is identified by a Common Language
453 Location Identifier ("CLLI") code. The Local Routing Number associated with
454 the telephone numbers assigned to the customers directs calls to Sprint's switch.
455 The Point Codes used for SS7 signaling identify Sprint's switch. Sprint is the
456 entity whose switch is performing every function associated with the
457 telecommunications services being provided. Therefore, Sprint is the ultimate
458 and only party that is interconnecting with SENTCO under this business model.
459

460 **Q. SENTCO suggests that Sprint is not entitled to reciprocal compensation**
461 **because the traffic does not originate or terminate to end users who are**
462 **customers of Sprint. Do the facts in this case support SENTCO's assertion?**
463 **A.** No, the facts I have presented and which I will expand upon do not support
464 SENTCO's assertion. The basis for reciprocal compensation does not depend on
465 who is actually serving an end user. It is based on the usage of a carrier's
466 network. Reciprocal compensation is an arrangement between two carriers in
467 which each of the two carriers receives compensation from the other carrier for
468 the transport and termination on each carrier's network of telecommunications
469 traffic that originates on the network facilities of the other carrier. Transport is
470 the transmission and any necessary tandem switching of telecommunications
471 traffic from the interconnection point between the two carriers to the terminating

472 carrier's end office switch that directly serves the called party, or equivalent
473 facility provided by a carrier other than an incumbent LEC. Termination is the
474 switching of telecommunications traffic at the terminating carrier's end office
475 switch, or equivalent facility, and delivery of such traffic to the called party's
476 premises. Termination does not include the cost of local loops.
477
478 **Q. Describe the services Sprint provides to TWC and other competitive service**
479 **providers.**
480 A. Sprint provides telecommunications services including, but not limited to, PSTN
481 interconnection utilizing Sprint's switch, number assignment using existing
482 numbers or by acquiring new numbers, number administration functions including
483 the filing of number utilization reports (NRUF) with the North American
484 Numbering Plan Administrator (NANPA). Sprint will also perform the porting
485 function, whether the port is from the ILEC or a CLEC to Sprint or vice versa.
486 Sprint will also be responsible for all inter-carrier compensation including
487 exchange access and reciprocal compensation. Sprint will be responsible for such
488 direct end-user services as operator services, directory assistance and directory
489 assistance call completion. Sprint will also provision 911 circuits to the
490 appropriate Public Safety Answering Points (PSAP) through the ILEC selective
491 routers, perform 911 database administration, and negotiate contracts with PSAPs
492 where necessary. Sprint will place directory listings on behalf of the end-user
493 customers in the ILEC or third-party directories. In addition, it should be noted
494 that exchange access is part of the service Sprint provides to the general public

495 and the service Sprint provides to TWC and similarly situated providers. The
496 exchange access is provided directly in Sprint's name, on all toll calls made and
497 received by the customers. Sprint provides exchange access, which is
498 unquestionably a telecommunications service, indiscriminately, regardless of who
499 the toll carrier is, on a common carrier basis.
500

501 **IX. THE COMMISSION HAS ALREADY APPROVED AT LEAST ONE**
502 **ARRANGEMENT SIMILAR TO THE ONE FOR WHICH SPRINT IS**
503 **SEEKING INTERCONNECTION WITH SENTCO.**
504
505 **Q. Has the Commission approved any arrangements in which two entities**
506 **combine to provide local voice services in a manner similar to that proposed**
507 **by Sprint and TWC here?**
508 A. Yes. The Commission has approved the arrangement in which Sprint and TWC
509 currently serve approximately 4,000 customers in the Lincoln, NE metropolitan
510 area under a model that is indistinguishable from the proposed model for
511 SENTCO territory. Although the relevant interconnection agreement covering
512 Lincoln was voluntarily negotiated by Alltel and Sprint, and not the subject of an
513 interconnection arbitration, the agreement was approved by this Commission in
514 Docket No. C-3300 by Order dated December 14, 2004. In its Order, the
515 Commission stated in the third paragraph that "the implementation of the
516 agreement is consistent with the public interest, convenience, and necessity." In
517 fact, Sprint and TWC today are providing the identical services in Lincoln under
518 its interconnection agreement with Alltel. If SENTCO's position prevails, it
519 might encourage carriers such as Alltel to assert arguments about the continued

520 viability of their voluntarily negotiated agreements. If carriers such as Alltel do
521 so, even customers in major metropolitan areas such as Lincoln could likewise be
522 deprived of competitive facilities-based services. As I understand it, such a result
523 would be contrary to the intent of the Act and serve only to preserve the
524 monopolies enjoyed by ILECs and RLECs. Competitive market entry has seen
525 countless legal challenges since the passage of the Act in 1996 because it was
526 impossible for Congress to foresee every single issue that could arise or every
527 novel approach to competition that the human mind might devise. The
528 Sprint/TWC model appears to be just such an approach. It is one that fits fully
529 within the flexible framework set forth in the Act, yet was not specifically
530 identified such as "UNEs."
531
532 **Q. Are the network structure and elements you described above for the**
533 **proposed services the same as what is being used to serve customers in**
534 **Lincoln, NE?**
535 A. Yes. The network is essentially the same. Exhibit JRB-2 is a comparison
536 between what Sprint is proposing for SENTCO territory in Exhibit JRB-1 and
537 what is actually deployed in Lincoln. The differences are a result of the different
538 geographic details and the fact that the ILEC in Lincoln is Alltel.
539
540 **Q. Is the network configuration and interconnection you are seeking with**
541 **SENTCO comparable to a typical ILEC to ILEC interconnection?**

542 A. Yes. The network configuration and interconnection I've described are
543 comparable to a typical ILEC to ILEC interconnection. Generally, ILECs provide
544 their own loops from their switch to their customers and interconnect to other
545 ILECs via an interconnection trunk comparable to the type Sprint is seeking from
546 SENTCO.
547
548 **Q. Does SENTCO currently have any wireless or ILEC interconnections you've**
549 **described above?**
550 A. Although I don't have first hand knowledge that there is a wireless
551 interconnection, SENTCO does have an interconnection agreement with Western
552 Wireless, a wireless provider. I would assume the purpose of this interconnection
553 agreement is to enable SENTCO and Western Wireless to exchange local traffic
554 over interconnection trunks provisioned pursuant to the terms and conditions of
555 the contract.
556
557 **X. SPRINT OFFERS ITS SERVICES INDISCRIMINATELY.**
558 **Q. When did Sprint begin discussions with cable companies such as TWC?**
559 A. Although I do not work in the department that developed the strategy of creating
560 relationships with cable companies and other similarly situated companies, I
561 provide regulatory support for this effort. I first got involved in this work in early
562 2003.
563

564 **Q. How did Sprint approach this new business opportunity you have previously**
565 **described as jointly provided service?**
566 A. Sprint identified cable companies as natural partners for a jointly provided
567 competitive voice service offering. Sprint identified potential "business partners"
568 through various means including trade associations such as the National Cable
569 Television Cooperative ("NCTC"), a buying consortium that represents over
570 1,000 independent cable operators, including many smaller operators; attendance
571 at trade shows; etc. Sprint attended one trade show in 2003, four trade shows in
572 2004, and three trade shows so far in 2005. The purpose of attending these trade
573 shows and meeting with the NCTC was to convey to as many cable companies as
574 possible that Sprint was interested in forming relationships to provide competitive
575 voice services.
576
577 **Q. Are cable companies divided into categories and has Sprint offered its**
578 **services to each of them?**
579 A. Yes, the cable industry is divided into categories labeled Tier 1, Tier 2 and Tier
580 3.[2] Tier 1 consists of the top 10 companies, Tier 2 consists of numbers 11-44 and
581 Tier 3 are number 45 and above. Sprint has approached virtually all cable
582 companies through the various means I mentioned above. Sprint has held
583 discussions with all of the Tier 1 companies, a majority of the Tier 2 companies
584 and several of the Tier 3 companies.
585

[2] Ranking of cable companies is from the 2004 Kagan Broadband Cable Financial Databook.

586 **Q. Briefly describe Sprint's results working with cable companies.**

587 A. Sprint has seen considerable success to date in working with cable companies.
588 Sprint has publicly announced agreements with seven cable companies covering
589 more than 18 states serving over 30 million households. Sprint's agreements
590 cover cable companies of all sizes bringing customers a choice of voice services
591 in large and small, urban and rural communities across the United States.

592

593 **Q; Is the proposed service intended to be a private service offered only to certain**
594 **types of customers?**

595 A. No. As is the case with the Sprint/TWC offering in Lincoln under the
596 interconnection agreement between Sprint and Alltel, the service will be available
597 to all customers in the SENTCO serving territory who wish to purchase them.

598

599 **Q. Will Sprint provide its interconnection services to all parties within a class**
600 **similarly situated to TWC, on a non-discriminatory basis?**

601 A. Yes. Sprint intends to offer its interconnection services, including those services
602 previously listed, to all entities that are similarly situated to TWC. That means,
603 Sprint intends to provide the interconnection services to all entities who desire to
604 take them and who have comparable "last mile" facilities to the cable companies.

605

606 **Q. Does the policy to provide the interconnection services to all within a class**
607 **substantially similar to TWC mean that the network configuration will be**
608 **identical for each provider? If not, why not?**

609 A. Sprint will provide the same services to all within the class similar to TWC to
610 allow those services effectively to be offered to the public. But, the networks of
611 the other providers will not be identical, nor will the amount of services
612 purchased. Some carriers for example will require different switching capabilities
613 from other carriers, but all will be offered the opportunity indiscriminately to
614 purchase use of Sprint's Class 5 end office switch. Because the Sprint/last-mile
615 provider relationship is a business relationship, some aspects of the final
616 agreement will, of necessity, reflect business differences and will be negotiated
617 separately. The presence of such differences, however, does not mean that Sprint
618 will discriminate between members in the class; just as a carrier offering a tariff
619 services is not discriminating when it is permitted to price the product differently
620 depending upon the minimum commitment level purchased. As in the tariff
621 example, as long as the tariffing carrier offers the same conditions to entities
622 within each class to which it is offered, no discrimination occurs. To be clear,
623 Sprint will offer the services previously identified to all within the class of entities
624 who desire the services and who have comparable "last mile" facilities to the
625 cable companies. In fact, should the Commission require Sprint to file a tariff for
626 this offering, it will make the offering available in a tariff.
627

628 **XI. SPRINT HAS ATTEMPTED TO NEGOTIATE WITH SENTCO AN**
629 **INTERCONNECTION AGREEMENT THAT IS SIMILARLY SITUATED**
630 **TO SENTCO'S EXISTING APPROVED AGREEMENT WITH WESTERN**
631 **WIRELESS.**
632

633

634 **Q. What approach has Sprint taken in its negotiations with SENTCO?**

635 A. Sprint has made a business decision to utilize, with some modifications, a
636 template based on the interconnection agreement SENTCO has negotiated with
637 Western Wireless. Many times new entrants evaluate whether existing
638 interconnection contracts meet their needs rather than negotiating an entirely new
639 agreement.

640

641 **Q. Does the Western Wireless agreement meet all of Sprint's needs with respect**
642 **to the type of interconnection Sprint is seeking with SENTCO?**

643 A. The Western Wireless agreement meets Sprint's goal of getting into the market as
644 quickly as possible. However, the agreement is not consistent with all of the
645 positions Sprint generally takes when negotiating with ILECs. Certain
646 modifications have been made to accommodate the fact that Sprint is a wireline
647 company rather than a wireless company, since the local calling scopes for
648 purposes of reciprocal compensation are different between a wireless company
649 and a wireline company. In addition, the following modifications were made to
650 the agreement (other than the open issues that are the subject of the Arbitration
651 proceeding): (i) the term of the agreement was changed; (ii) the terms of record
652 retention were clarified and revised to ensure both parties' ability to comply; (iii)
653 indirect interconnection language was removed because Sprint agreed that it
654 would interconnect directly with SENTCO; and (iv) language was added to
655 ensure both parties' compliance with CALEA, requirements for providing SS7
656 information, and requirements for 911. Even though Sprint may not agree with

657 all the terms and conditions of the contract and under different circumstances may
658 have arbitrated additional issues, Sprint felt the simplest approach would be to
659 make minimal modifications to the Western Wireless agreement.
660
661 **Q. Why did Sprint decide not to arbitrate some of the terms and conditions of**
662 **the Western Wireless agreement if they were not consistent with positions**
663 **Sprint generally takes with ILECs ?**
664 A. It is Sprint's goal to interconnect with SENTCO in order to bring a service to
665 these rural Nebraska customers that they've never seen before: a wireline
666 facilities-based voice service alternative to the service of their current monopoly
667 ILEC, SENTCO. Sprint felt the least controversial approach would be to attempt
668 to use, to the extent possible, an existing SENTCO interconnection agreement.
669 This would allow the Commission to focus on the threshold issue being disputed,
670 Sprint's right to interconnect with SENTCO.
671
672 **Q. How would you characterize the negotiations between Sprint and SENTCO?**
673 A. The negotiations between Sprint and SENTCO have been tentative because of the
674 conflict over the issues in this proceeding related to Sprint's intent to interconnect
675 for purposes of the business model described in my testimony. Negotiations,
676 other than this point, have been comparable to other ILEC/CLEC negotiations,
677 given Sprint's willingness to accept the majority of terms and conditions of an
678 agreement already in use.
679

680 **XII. SPRINT'S POSITION ON ARBITRATION ISSUES 1 AND 2.**

681 **Arbitration Issue No. 1 – Should the definition of "End User or End User**
682 **Customer" include customers of a service provider for whom Sprint provides**
683 **interconnection and other telecommunications services? (Section 1.6 and as**
684 **applied elsewhere in the Agreement)**

685

686 **Q. Please describe Arbitration Issue No. 1.**

687 A. Arbitration Issue No. 1 addresses the core issue in the disagreement between
688 Sprint and SENTCO, which is whether the term "End User" in the
689 interconnection contract should allow Sprint to include the local traffic of
690 customers of third party service providers.

691

692 **Q. What is Sprint's position on Arbitration Issue No. 1?**

693 A. It is Sprint's position that the definition of "End User and End User Customer" in
694 Section 1.6 should include customers of a service provider for whom Sprint
695 provides interconnection and other telecommunications services, including TWC.

696

697 **Arbitration Issue No. 2 – Should the definition of "Reciprocal**
698 **Compensation" include the transportation and termination on each carrier's**
699 **network of all local traffic? Section 1.21 and as applied elsewhere in the**
700 **Agreement.**

701

702

BEFORE THE NEBRASKA PUBLIC SERVICE COMMISSION

REBUTTAL TESTIMONY

OF

JAMES R. BURT

Application No. C-3429

August 3, 2005

EXHIBIT
103
Aug 8 10 05

1 **Q. Please state your name.**

2 A. My name is James R. Burt.

3

4 **Q. Are you the same James R. Burt that submitted direct testimony in this**

5 **arbitration proceeding identified as Application No. C-3429?**

6 A. Yes.

7

8 **Q. Mr. Burt, can you please summarize the purpose of this testimony?**

9 A. Yes. In this rebuttal testimony, I will respond to five specific points addressed in

10 the direct testimony of Southeast Nebraska Telephone Company ("SENTCO")

11 witness Elizabeth Sickel (hereinafter, the "Sickel Testimony") that require a reply

12 from Sprint. Although the Sickel Testimony would permit me opportunities to

13 reiterate and restate the key points of my direct testimony, in the interest of not

14 burdening the Commission, I have refrained from doing so. Instead, I have

15 limited my rebuttal testimony to specific points in the Sickel Testimony. The

16 absence of reiteration or re-argument does not mean that Sprint concedes any of

17 SENTCO's characterization of the issues or facts in this proceeding.

18

19 **Q. On page 4 Ms. Sickel emphasizes the term "enabler" to characterize Sprint's**

20 **services. In your opinion, does SENTCO's emphasis on the term "enabler"**

21 **impact Sprint's right to interconnection with SENTCO?**

22 A. No, it does not. The term "enabler" is not a term defined in the

23 Telecommunications Act of 1996 ("the Act"). Regardless of the term that is

24 chosen to describe Sprint's proposed services, Sprint and its proposed services fit
25 the definitions of telecommunications carrier and telecommunications services in
26 Sections 153(44) and 153(47), respectively, of the Act. Sprint intends to provide
27 telecommunications services in its capacity as a telecommunications carrier. By
28 emphasizing the term "enabler," SENTCO is attempting to denigrate the true
29 competitive nature of the telecommunications services that Sprint and Time
30 Warner Cable ("TWC") intend to provide to rural subscribers in Nebraska. The
31 essence of SENTCO's position is that Sprint must be a carrier providing billing,
32 customer care, and installation to subscribers before SENTCO can be required to
33 interconnect with Sprint under the Act. As I have explained, there is no such
34 requirement in the Act, as many state commissions such as those in Ohio, Illinois
35 and New York have already recognized. SENTCO's emphasis of the term
36 "enabler" does not change the true nature of the telecommunications services that
37 Sprint will provide, including the interconnection services that it intends to make
38 available to all within the class similarly situated to TWC, so that the services are
39 effectively being offered to the public. As set forth more fully in my direct
40 testimony, Sprint and TWC will each provide network elements, expertise,
41 resources, capabilities, assets and market position to permit rural subscribers in
42 SENTCO's territories to have a meaningful choice for their local
43 telecommunications services, as an alternative to SENTCO.
44

45 **Q. On page 5 Ms. Sickel characterizes the proposed interconnection agreement**
46 **(ICA) as being "for the benefit of a third party carrier that is not a party to**
47 **such ICA". Do you agree with this characterization?**
48 A. No. Sprint is not seeking interconnection with SENTCO for the benefit of TWC.
49 Sprint seeks interconnection with SENTCO because Sprint is a
50 telecommunications carrier proposing to provide telecommunications services as
51 defined in the Act, and therefore Sprint is entitled to interconnection in its own
52 right. Neither Sprint nor TWC is the agent of the other party for purposes of the
53 proposed interconnection agreement. Rather, Sprint has chosen to combine and
54 leverage resources, capabilities, expertise, assets and market position with other
55 competitive service providers (in this case TWC) to bring facilities-based
56 competitive voice services to consumers in Nebraska. Sprint's business model
57 capitalizes on the resources and capabilities of both companies to allow for
58 market entry far sooner than if either TWC or Sprint were to attempt to enter the
59 market alone. Sprint and TWC each bring different resources to the relationship
60 that, when combined, will allow consumers in SENTCO's territories to have
61 access to competitive local voice service.
62
63 **Q. On page 8 Ms. Sickel characterizes Sprint's arrangement with TWC as a**
64 **"private contract." Do you agree with this characterization?**
65 A. No. Sprint intends to offer its interconnection services, including those services
66 previously listed, to all persons or entities within a class similarly situated to
67 TWC so that the proposed services are effectively available to the public. This

68 means that Sprint intends to provide the interconnection services to all entities
69 who desire to take them and who have comparable "last mile" facilities to the
70 entities like TWC in SENTCO territory. As I stated in my direct testimony, if the
71 Commission requires it, Sprint is willing to file a tariff for these interconnection
72 services. In addition, contrary to the implication created by SENTCO's use of the
73 term "private" contract, the proposed services are not private services offered only
74 to a few select business, but rather will be available to all customers in the
75 SENTCO serving territory who wish to purchase them.
76
77 **Q. On page 9 Ms. Sickel testifies that "the end users that originate the traffic**
78 **that Sprint seeks to exchange with SENTCO under the ICA will be TWC's**
79 **end users," and "only TWC will have the end user relationship not Sprint."**
80 **In your opinion, does this affect Sprint's right to interconnection with**
81 **SENTCO?**
82 A. No. As Sprint's discovery responses adequately disclose, it is true that TWC
83 intends to perform the billing, customer service, and installation functions for the
84 competitive voice services, while Sprint will provide other services such as
85 switching; public switched telephone network ("PSTN") interconnectivity,
86 including all inter-carrier compensation; numbering resources, administration and
87 porting; domestic and international toll service; operator and directory assistance
88 and numerous back-office functions. However, contrary to the implication
89 suggested by SENTCO, there is no requirement under the Act that an entity
90 provide billing and customer service functions to the subscribers of the services in

91 order for that entity to be entitled to interconnection and reciprocal compensation.
92 Ms. Sickel points to no such provision. Sprint is a telecommunications carrier
93 providing telecommunications services under the Act. As such, Sprint is entitled
94 to interconnection with SENTCO.
95
96 **Q. Does Ms. Sickel's testimony on page 9, which is addressed above, refute**
97 **Sprint's position that it will be entitled to reciprocal compensation under its**
98 **proposed interconnection agreement with SENTCO?**
99 A. No. The basis for reciprocal compensation does not depend on who is actually
100 serving an end user. It is based on the usage of a carrier's network. Sprint owns
101 the Class 5 switch that will switch residential subscribers' voice calls. Sprint's
102 switch will perform all switching and routing functions for local, domestic and
103 foreign toll, emergency, operator assisted, directory assistance calls.
104
105 It is important to underscore that every call passing between the PSTN and the
106 customers of the service being provided under this business model will pass
107 through Sprint's switch. The Sprint Class 5 switch is the relevant piece of
108 telecommunications equipment that connects end users to the PSTN. Without it,
109 proposed subscribers could not make or receive voice telecommunications calls.
110 This switch is identified in the Local Exchange Routing Guide ("LERG") and is
111 identified by a Common Language Location Identifier ("CLLI") code. The Local
112 Routing Number associated with the telephone numbers assigned to the customers
113 directs calls to Sprint's switch. The Point Codes used for SS7 signaling identify

114 Sprint's switch. Sprint is the entity whose switch is performing every function
115 associated with the telecommunications services being provided.
116
117 Because Sprint's network facilities are the relevant telecommunications facilities
118 being accessed to originate and terminate voice telephone traffic on the PSTN, the
119 usage of its network is a proper subject for reciprocal compensation (as is the
120 network of the other LEC involved, i.e., SENTCO).
121
122 In addition, it should be noted that under the proposed ICA, SENTCO would also
123 pay and receive payment for traffic exchanged between Sprint and SENTCO.
124
125 **Q. Does this conclude your rebuttal testimony?**
126 A. Yes it does.

CERTIFICATE OF SERVICE

The undersigned hereby certifies that the foregoing was served by electronic mail and U.S. mail, postage prepaid to the following on the 3rd day of August, 2005:

Shana Knutson
Nebraska Public Service Commission
1200 N St. 300 The Atrium
Lincoln, NE 68508

Paul M. Schudel
Woods & Aiken LLP
301 S 13th St Ste 500
Lincoln NE 68508

James A. Overcash
Woods & Aitken LLP
301 S 13th St Ste 500
Lincoln, NE 68508

Diane Browning

Diane C. Browning

BEFORE THE NEBRASKA PUBLIC SERVICE COMMISSION

In the Matter of Sprint Communications Company L.P., Overland Park, Kansas, Petition for arbitration under the Telecommunications Act, of certain issues associated with the proposed interconnection agreement between Sprint and Southeast Nebraska Telephone Company, Falls City.	)	Application No. C-3429 PLANNING CONFERENCE ORDER Entered: June 28, 2005

BY THE HEARING OFFICER:

O P I N I O N A N D F I N D I N G S

On June 22, 2005, a planning conference was held in the Commission Library, Lincoln Nebraska. Ms. Diane Browning appeared for Sprint Communications Company L.P. (Sprint) by telephone. Mr. James Overcash and Mr. Paul Schudel appeared for Southeast Nebraska Telephone Company (SENTCO). SENTCO and Sprint may collectively be referred to below as the "Parties."

In response to Sprint's Petition, SENTCO filed on or about June 17, 2005 a Motion to Dismiss or, in the Alternative, Response to the Petition. Without waiving SENTCO's positions in the Motion to Dismiss and Response, the Parties have agreed that the issues raised therein will be resolved in conjunction with the Commission's decision in this proceeding after the presentation of evidence, hearing, and submission of proposed orders/briefs under the schedule set forth below. Accordingly, the Commission will not hold a separate hearing on the Motion to Dismiss, and Sprint is not required to respond to the Motion to Dismiss. Instead, the Commission will address the Motion to Dismiss and any opposition thereto as part of its decision in this matter. In establishing this procedure, the Commission specifically notes that all arguments raised in the Motion to Dismiss are preserved and that the Parties may address and respond to those arguments as part of the post-hearing proposed orders/briefs to be submitted to the Commission following the hearing. Moreover, the Parties' agreement does not prevent either of them from raising additional arguments or assertions that arise out of the presentation of evidence or the record from the hearing on Sprint's Petition.

EXHIBIT 104 8-10-05
BENGAD 800-631-6989
Printed with soy ink on recycled paper

Accordingly, pursuant to the discussions at the planning conference the following schedule was agreed upon by the parties:

Event	Date
Serve Discovery	June 28, 2005
Objections to Discovery Served	July 5, 2005
Hearing on Objections	July 6, 2005 at 1:30 p.m.
Order on Objections	July 8, 2005
Responses to Discovery Served	July 14, 2005
Prefiled Direct Testimony and corresponding Exhibits	July 25, 2005
Prefiled Rebuttal Testimony and corresponding Exhibits	August 3, 2005
Proposed Order/Brief Submission deadline	September 2, 2005

0481

Any exhibits to be utilized at hearing solely for impeachment purposes need not be prefiled.

The parties agreed to limit the scope of discovery. The number of interrogatories to be served is limited to twenty (20). The number of document requests shall be limited to five (5). The number of requests for admissions shall be limited to ten (10).

Service of discovery, objections, testimony, exhibits and briefs by electronic mail shall be required. Email service of relevant documents by 5:00 p.m. CDT on the dates set forth above shall be deemed timely. Paper copies of all materials served by email shall be provided by regular U.S. Mail.

The hearing in this matter will be held in the Commission Hearing Room, 300 The Atrium Building, 1200 N Street, Lincoln, Nebraska on August 10, 2005 at 10:00 a.m. The Commission

Printed with soy ink on recycled paper

expects to release its decision on September 13, 2005 which is prior to the nine month deadline set forth in section 252(b)(4)(C) of the Telecommunications Act of 1996.

O R D E R

IT IS THEREFORE ORDERED by the Hearing Officer that the foregoing procedural schedule be and it is hereby adopted.

MADE AND ENTERED at Lincoln, Nebraska this 28th day of June, 2005.

NEBRASKA PUBLIC SERVICE COMMISSION

By: _____
Hearing Officer

Printed with soy ink on recycled paper

Printed with soy ink on recycled paper

EXHIBIT
105
Aug 8 05
FELCO 800-631-6989

BEFORE THE NEBRASKA PUBLIC SERVICE COMMISSION

In the Matter of Sprint Communications Company L.P., Overland Park, Kansas, Petition for arbitration under the Telecommunications Act, of certain issues associated with the proposed interconnection agreement between Sprint and Southeast Nebraska Telephone Company, Falls City.	)	Application No. C-3429 HEARING OFFICER ORDER Entered: August 5, 2005

BY THE HEARING OFFICER:

O P I N I O N A N D F I N D I N G S

This matter comes before the Hearing Officer on a motion in limine filed by Sprint Communications Company L.P. (Sprint or Petitioner) on July 29, 2005. Sprint's motion seeks to exclude certain discovery and documents identified by Southeast Nebraska Telephone Company (SENTCO). Specifically, Sprint requests an order excluding the items identified by SENTCO in Response to Sprint's Request for Production No. 1 and listed as Exhibit Nos. 3,5,6,7,8,9,10,11,12,13,14,15,16, and 17 of SENTCO's Exhibit Designations filed electronically on July 25, 2005. On August 5, 2005, SENTCO electronically filed its response to Sprint's motion in limine. In SENTCO's reply, the designation of exhibits 9, 11, 15 and 17 were withdrawn. Accordingly, with respect to those exhibits Sprint's motion in limine is moot. This Order addresses the remaining portions of Sprint's motion.

Upon consideration of the motion, the Hearing Officer finds the motion in limine should be denied with respect to exhibits 3, 5, 6, 8, 10, 12 and 16. With respect to the designation of exhibits 10, 12 and 16, the Hearing Officer finds that portions of these designated documents may be relevant in describing the business arrangement between Sprint and Time Warner and may be received at the hearing to the extent they are admissible for the purpose in which they are offered.

Sprint's motion should be granted with respect to exhibits 7, 13, and 14. The Hearing Officer does not agree that a violation of the protective order has occurred by SENTCO's designation of exhibit 7, but agrees with the argument forwarded by Sprint that the protective order issued in C-3204 would prohibit the use and disclosure of the confidential information provided in that proceeding in the matter before us. Further, SENTCO designated exhibits 13 and 14 for the purpose of impeachment. Although certain portions of the transcript for C-

3228 which describe the business arrangement between Sprint and SENTCO may be admissible at the hearing, standing alone, the use of exhibits 13 and 14 for the impeachment of Mr. Burt who was not involved in C-3228 will not be permitted. Accordingly, the motion in limine is granted as it pertains to exhibits designated by SENTCO as 13 and 14.

O R D E R

IT IS THEREFORE ORDERED by the Hearing Officer that the motion in limine filed by Sprint is hereby granted in part and denied in part as provided herein.

MADE AND ENTERED at Lincoln, Nebraska this 5th day of August, 2005.

NEBRASKA PUBLIC SERVICE COMMISSION

By: _____
Hearing Officer

Current Network Configuration Serving Subscribers in Lincoln, NE

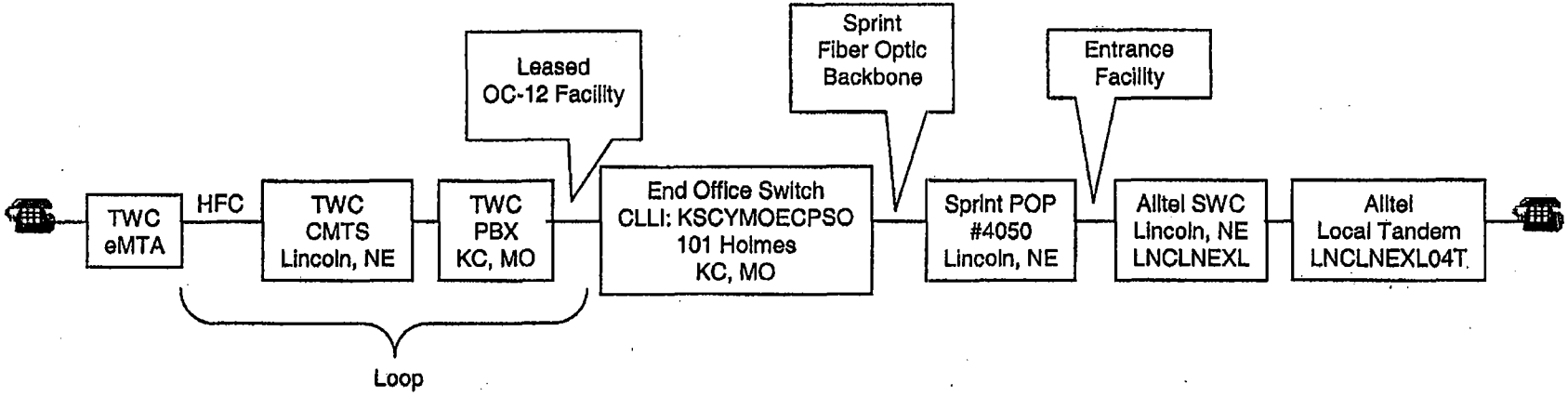

Legend:
eMTA = embedded multi-media terminal adapter
HFC = hybrid fiber coax
CMTS = cable modem termination system
PBX = private branch exchange
CLLI = common language location identifier
POP = point of presence
SWC = serving wire center

PENGAD 800-631-6989
EXHIBIT
Page 16 of 16

703 **Q. Please describe Arbitration Issue No. 2.**

704 A. Arbitration Issue No. 2 is a result of SENTCO's position on Arbitration Issue No.
705 1. Since SENTCO does not agree that Sprint is a telecommunications carrier, it
706 will not agree on the definition of Reciprocal Compensation. SENTCO merely
707 extends its position on Arbitration Issue No. 1 to another aspect of the contract
708 terms and conditions.

709

710 **Q. Please describe Sprint's position on Arbitration Issue No. 2.**

711 A. It is Sprint's position on Arbitration Issue No. 2 that the definition of Reciprocal
712 Compensation should include the transportation and termination on each carrier's
713 network of all Local Traffic as that term is defined in Section 1.3 of the
714 Agreement.

715

716 **Q. Does this conclude your testimony?**

717 A. Yes it does.

Exhibit JRB-2

Network Configuration Envisioned to Serve Subscribers in Falls City, NE Compared to Existing Network in Lincoln, NE

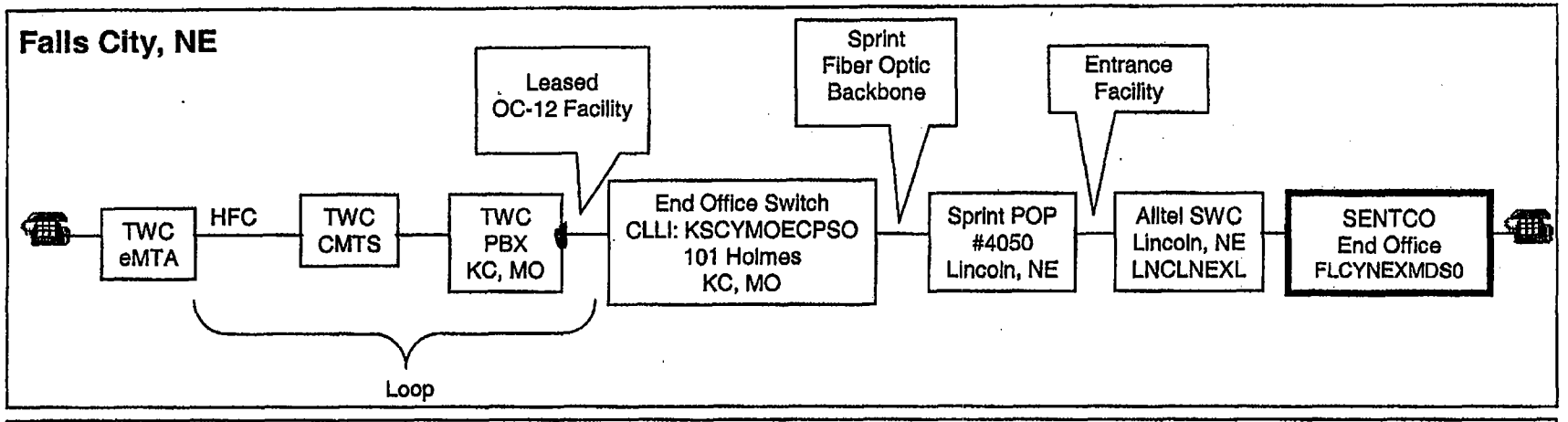

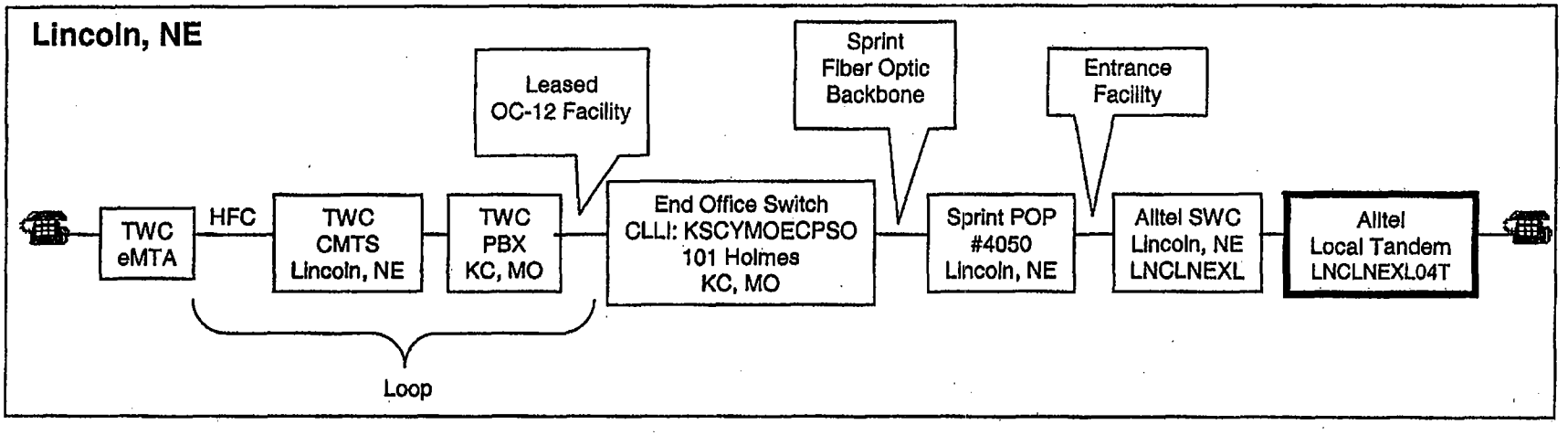

EXHIBIT 107 Hu 8/18/05 FENGAD 800-631-6989

Exhibit JRB-3

To: Any Concerned,
Amber Mez and myself are satisfied Time Warner Cable customers. We currently have cable and high speed internet service from Time Warner. We are very interested in becoming customers of Time Warner's digital phone service as well. We feel it would benefit the Falls City residents for several reasons. First and foremost, competitors in a closed market area create benefits for all the area customers. Better and more services, competitive pricing, more responsive customer support, and break through technology are some of the benefits. For us, there is the added convenience of a simplified billing and bill paying process. We hope digital service will also bring other technologies and greater coverage in the area for other services, including cable, high speed internet, and wireless phone services.
We have found Time Warner to be a customer friendly and dependable company, and service provider. We look forward to the possibility of trying Time Warner digital phone service, and seeing what other services Time Warner may be able to bring to the Falls City area.

Sincerely, Jeffrey Woosley.

EXHIBIT
108
7-21-05

STATE OF NEBRASKA
PUBLIC SERVICE COMMISSION

IN RE:	)	
	)	DOCKET NO. _____
SPRINT COMMUNICATIONS COMPANY L.P.	)	
PETITION FOR ARBITRATION UNDER THE	)	
TELECOMMUNICATIONS ACT	)	
	)	

PETITION FOR ARBITRATION OF SPRINT COMMUNICATIONS COMPANY L.P.

Pursuant to Section 252 of the Telecommunications Act of 1996, Pub. L. No. 104-104, 110 Stat. 56 (1996) (codified at 47 U.S.C. § 151 *et seq.*) ("the Act"), Sprint Communications Company L. P. ("Sprint") petitions the Nebraska Public Service Commission ("the Commission") to arbitrate certain unresolved issues associated with the proposed interconnection agreement between Sprint and Southeast Nebraska Telephone Company ("Sentco").

PARTIES

Sprint is a competitive local exchange carrier ("CLEC") authorized to provide competitive local exchange telecommunications service within the state of Nebraska. Sprint's principal offices are located at 6200 Sprint Parkway, Overland Park, Kansas, 66251. Sentco is an incumbent local exchange carrier providing telephone exchange service and exchange access in the state of Nebraska. All correspondence, notices, inquiries and orders regarding this Petition should be directed to the parties and their counsel set forth below:

Diane C. Browning
6450 Sprint Parkway
Mailstop KSOPHN0212-2A511
Overland Park, KS 66251

Bradford E. Kistler
Kinsey Ridenouer Becker & Kistler, LLP
601 Lincoln Square
121 South 13th Street
Lincoln, NE 68501

Exhibit
1
8-10-05

Elizabeth A. Sickel
Southeast Nebraska Telephone Co.
110 W. 17th St.
Falls City, NE 68355

Paul M. Schudel
Woods & Aiken, LLP
301 S. 13th St., Suite 500
Lincoln, NE 68508

JURISDICTION

The Commission has jurisdiction over this Petition pursuant to the Act. In §252(b)(1), Congress created a specific arbitration procedure for ILECs and requesting telecommunications carriers to obtain state commission arbitration of any open issues arising after the ILEC receives a requesting telecommunications carrier's request for negotiation. Either party to a negotiation (the ILEC or the requesting telecommunications carrier) may request arbitration by the commission "during the period from the 135th to the 160th day after the date on which an incumbent local exchange carrier receives a request for negotiation under this section . . . ." §252(b)(1) of the Act.

Attached hereto as Exhibit 1 is a letter from Sentco's counsel dated December 22, 2004. This letter acknowledges December 16, 2004 as the date Sentco received Sprint's request for interconnection. Accordingly, the time period for filing this Petition for arbitration with the Commission, pursuant to §252(b)(1) of the Act, is April 29, 2005 through May 24, 2005. Sprint is filing this Petition for Arbitration timely, between the 135th and 160th day following Sentco's receipt of Sprint's interconnection request.

Sprint has complied with the statutory pre-condition to arbitration by issuing a request for negotiation to Sentco. Sprint is complying with the statutory procedural requirement by timely filing this Petition. Therefore, the requested arbitration falls squarely within the jurisdiction of the Commission.

BACKGROUND

Attached hereto as Exhibit 2 is the proposed draft Interconnection and Reciprocal Compensation Agreement ("the Agreement") between Sprint and Sentco. The Agreement reflects both the disputed and undisputed terms and conditions. Undisputed provisions are shown in normal text. Where there are known unresolved issues, each party's proposed language is identified and shown in italics. Sprint respectfully requests that the Commission order Sentco to enter into an interconnection agreement pursuant to the terms and conditions agreed to by the parties and, where no agreement exists, pursuant to the terms and conditions proposed by Sprint. If the parties identify any other provisions where the parties disagree, other than those identified in this Petition, Sprint respectfully requests that the Commission also resolve those issues.

ISSUES TO BE ARBITRATED

The issues in this arbitration stem from Sentco's assertion that the scope of the interconnection agreement should be limited to end users for whom Sprint is the customer-facing retail service provider. As set forth more fully below, the parties' dispute manifests itself primarily in two areas of the Agreement: the definition of "End User or End User Customer" and the definition of "Reciprocal Compensation." However, to the extent this issue affects any other provisions of the Agreement not specifically identified in this Petition, Sprint respectfully requests that the Commission also resolve the other affected provisions.

Sprint seeks to offer competitive alternatives in telecommunications services to consumers in the Falls City area, through a market entry model in which Sprint, working with other competitive telecommunications providers, provides competitive local voice telecommunications services. Specifically, Sprint has entered into a business arrangement with

Time Warner Cable ("Time Warner") to support Time Warner's offering of local and long distance voice services in the Falls City area. Pursuant to its arrangement with Time Warner, Sprint provides telecommunications services, including but not limited to interconnection to the public switched telephone network (PSTN), number acquisition and administration, submission of local number portability orders to the ILEC, inter-carrier compensation for local and toll traffic, E911 connectivity, operator services, directory assistance, directory assistance call completion and the placement of orders for telephone directory listings. Time Warner provides the "last mile" network over hybrid fiber coaxial facilities, marketing and sales, end user billing, and customer service.

Sprint has successfully implemented this market entry model with Time Warner in the Lincoln metropolitan area by entering into an interconnection agreement with the ILEC in that area. In addition, Sprint has implemented this market entry model in conjunction with various cable companies in twelve (12) other states: Missouri, Minnesota, Kansas, Illinois, Mississippi, Louisiana, Wisconsin, Ohio, Michigan, Texas, New York, and New Jersey. In these other ILEC territories, Sprint is currently providing the same services outlined above to nearly 400,000 subscribers without issue. Sprint is simply requesting the same arrangement with Sentco that Sprint has successfully implemented with the ILECs in these other territories.

In fact, it appears the NPSC has endorsed Sprint's business arrangement with Time Warner in Sprint's CLEC Certification Order, Docket No. C-3204, dated February 8, 2005 ("the Sprint CLEC Order"). The Sprint CLEC Order states on p. 2 as follows (italics added):

> "Initially, Sprint proposes to provide transport, switching and interconnection for the origination and termination of local and long distance traffic. These services will be provided upon request of wholesale customers within the state of Nebraska. No deposits will be required. Sprint intends to partner with cable companies who want to provide local and long distance service. One such relationship exists with Time Warner Cable, whose CLEC application was granted on November 23, 2004. Time Warner

Cable will provide end user billing, marketing and sales, customer service and customer access. *Sprint provides wholesale services that enable the Time Warner Cable retail service.*"

Clearly, the Commission contemplated and endorsed Sprint's business arrangement with Time Warner.

ISSUE NO. 1

Should the definition of "End User or End User Customer" include end users of a service provider for whom Sprint provides interconnection and other telecommunications services? (Section 1.6 and as applied elsewhere in the Agreement.)

SPRINT POSITION: As discussed above, the NPSC has already contemplated and endorsed Sprint's business arrangement with Time Warner in Sprint's CLEC Certification Order. Accordingly, the definition of "End User or End User Customer" in Section 1.6 should include end users of a service provider for whom Sprint provides interconnection and other telecommunications services, including Time Warner.

Sprint is a telecommunications carrier providing telecommunications services. Sprint is a telecommunications carrier[1] providing telecommunications services under the Act. Section 153(46) of the Act defines telecommunications services as the "offering of telecommunications for a fee directly to the public, *or to such class of users as to be effectively available directly to the public,* regardless of the facilities used." (italics added) Clearly, Sprint will be providing telecommunications services within the meaning of this definition.

Sentco's position would preclude Sprint from being able to provide the PSTN interconnection services the competing service providers require and want Sprint to provide for them. This position would effectively eliminate this form of local service competition in

[1] Section 153(44) of the Act provides that "[t]he term telecommunications carrier" means any provider of telecommunications services, except that such term does not include aggregators of telecommunications services (as defined in Section 226)." Sprint is not an aggregator as that term is defined under §226 the Act, because Sprint does not merely make telephones available to the public for interstate telephone calls using a provider of operator services.

Sentco's exchanges. Sentco is suggesting that this market entry business model is unacceptable. Allowing any ILEC, including an RLEC, to limit the forms of competition in its service area is contrary to the pro-competition goals of the Act. The Act contemplates, and the FCC embraces, innovative market entry models. The FCC's most recent Unbundled Network Element Order (Docket Number 04-313 and 01-338, released on February 4, 2005), states in paragraph two, "In this Order, the Commission takes additional steps to encourage the innovation and investment that come from facilities-based competition." Sprint is prepared to provide facilities-based competition as envisioned by the FCC, once it obtains interconnection with Sentco.

Sprint's third party business arrangements as a provider of PSTN services require Sprint to meet all inter-carrier contractual obligations required by state and/or federal law, rules, decisions or orders, including obtaining all necessary interconnection agreements. Sprint maintains that the execution of the Agreement would bind Sprint to all of the terms and conditions of the Agreement regardless of the direct or indirect relationship with an end user whose traffic is being exchanged. Sprint is the carrier that will be providing number acquisition, telephone number assignment (including LRNs), port requests, and switching and transport of local calls and exchange access to and from the PSTN (including calls to 911) for end users. Accordingly, Sentco's position that only service providers providing services directly to end user customers are eligible to enter into an interconnection agreement with Sentco is anti-competitive and establishes limitations to a competitor's market entry model, which is inconsistent with the spirit and letter of the Act.

The Public Utilities Commission of Ohio ("PUCO") has considered the very same issue. In its Finding and Order dated January 26, 2005, PUCO stated as follows:

"The Commission observes that MCI is a certificated carrier in the state of Ohio. As such, MCI is a provider of telecommunications services and is qualified to submit an interconnection request to Applicants. Further, the commission finds that MCI is acting in a role no different than other telecommunications carriers whose network could interconnect with Applicants so that traffic is terminated to and from each network and across networks. Therefore, the Commission disagrees with Applicants that MCI is not a telecommunications carrier and that Applicants have no duty to interconnect with MCI."[2]

Further, in its recent Order on Rehearing dated April 13, 2005, PUCO denied rehearing on the issue of whether MCI was providing telecommunications service. The Order on Rehearing states as follows:

"The Commission denies rehearing on Applicants' fifth assignment of error. The Commission agrees with Applicants that 47 U.S.C. §251(a)(1) and (c)(2) require Applicants to interconnect with other "telecommunications carriers" and that 47 U.S.C. §153(44) defines a "telecommunications carrier" as "any provider of telecommunications services." The Commission also observes, as do Applicants, that the 47 U.S.C. §153 definition of "telecommunications service" is "the offering of telecommunications for a fee directly to the public, or to classes of users as to be effectively available to the public, regardless of the facilities used." Applying this definition to MCI and its BFR, the Commission notes that MCI will doubtless collect a fee for providing telecommunications via interconnection with Applicants. *Further, MCI's arrangements with Time Warner will make the interconnection and services that MCI negotiates with Applicants "effectively available to the public, regardless of the facilities used."*[3]

While the Ohio ruling resulted from a rural exemption proceeding, which is not the context in which the instant case arises, the portion of the ruling pertaining to MCI's provision of telecommunications service is compelling. Sprint will, for a fee, be providing interconnection for purposes of access to the public switched telephone network (PSTN). Like MCI in the Ohio case, Sprint emphasizes that Sprint's proposed interconnection agreement with Sentco places Sprint in the same position as other intermediate carriers whose

---

[2] In the Matter of the Application and Petition in Accordance with Section II.A.2.b. of the Local Service Guidelines Filed by: The Champaign Telephone Company et. al, Case No. 04-1494-TP-UNC *et. seq.*, Finding and Order, January 26, 2005.

[3] In the Matter of the Application and Petition in Accordance with Section II.A.2.b. of the Local Service Guidelines Filed by: The Champaign Telephone Company et. al, Case No. 04-1494-TP-UNC *et. seq.*, Order on Rehearing, April 13, 2005 (italics added).

interconnections terminate traffic to and from each network and across networks. If Sentco were to prevail in its argument, by extension Sentco would have no duty to provide interconnection for transit purposes.

Sprint is entitled to interconnection under §251(a) and (b). As discussed above, Sprint is a telecommunications carrier within the meaning of §153(44) of the Act. As such, Sentco has a duty to interconnect directly or indirectly with Sprint pursuant to §251(a) of the Act.

§251(a) of the Act requires each telecommunications carrier to interconnect directly or indirectly with the facilities and equipment of other telecommunications carriers. This requirement is essential to ensure the operation of the nationally interconnected network that is in place today. Additionally, the FCC's regulations (47 CFR 51.5) include the following definition for interconnection: "Interconnection is the linking of two networks for the mutual exchange of traffic". The mutual exchange of traffic must include traffic from all end users and cannot be limited by Sentco to exclude end users of a service provider for which Sprint is providing telecommunications services.

Furthermore, as a telecommunications carrier, Sprint is entitled to all the rights enjoyed by telecommunications carriers under §251 of the Act, which includes rights under §251(b). The Federal Communications Commission ("FCC") has held that a directory assistance provider's provision of "call completion" entitled the provider to nondiscriminatory directory assistance database access under §251(b)(3), whether or not the provider was certified by the state as a CLEC.[4] As explained above, Sprint will be providing much more extensive

0497

[4] *Provision of Directory Listing Information under the Telecommunications Act of 1934, as Amended*, CC-Docket No. 99-273, First Report and Order, 2001 FCC Lexis 473, para. 18 (2001).

telecommunications service than the directory assistance provider in the FCC ruling. Accordingly, Sprint is entitled to rights under §251(b).

Conclusion. Because Sprint is a telecommunications carrier under the Act, and Sprint is entitled to interconnection and other rights under §251(a) and (b) of the Act, the definition of "End User or End User Customer" in Section 1.6 of the Agreement should include end users of a service provider for whom Sprint provides interconnection and other telecommunications services.

SENTCO POSITION: The definition of "End User or End User Customer" in Section 1.6 of the Agreement should be limited to end users for whom Sprint is the customer-facing retail service provider. Sentco has not indicated to Sprint the basis for its position.

ISSUE NO. 2

Should the definition of "Reciprocal Compensation" include the transportation and termination on each carrier's network of all Local Traffic? (Section 1.21 and as applied elsewhere in the Agreement.)

SPRINT POSITION: The definition of "Reciprocal Compensation" should include the transportation and termination on each carrier's network of all Local Traffic (as that term is defined in Section 1.13 of the Agreement).

This issue relates to Sentco's assertion that the scope of the Agreement should be limited to those end users for whom Sprint is the customer-facing retail service provider. As discussed in detail above, the NPSC has contemplated and endorsed Sprint's business arrangement with Time Warner in Sprint's CLEC Certification Order. In addition, Sprint is a telecommunications carrier within the meaning of §153(44) of the Act and is entitled to interconnect under §251(a) and receive the benefits of §251(b) of the Act. Nothing in these

provisions suggests that the scope of the Agreement should be limited to end users for whom Sprint is the customer-facing provider of retail services.

SENTCO POSITION: The definition of Reciprocal Compensation should exclude end users of a service provider for whom Sprint provides interconnection and other telecommunications services, such as Time Warner. Sentco has not indicated to Sprint the basis for its position.

RELIEF REQUESTED

Sprint respectfully requests the Commission to:

1) Docket and refer the proceeding for arbitration of the unresolved issues identified in this Petition in accordance with the requirements of Sections 251 and 252 of the Act and the rules set forth in Progression Order No. 3, Docket No. C-1128, dated August 19, 2003;

2) Require the parties to enter into an interconnection agreement that includes all of the terms agreed to by the parties and, on all disputed issues, the terms and contract language proposed by Sprint in the Agreement attached as Exhibit 2;

3) Order the parties to file for approval, pursuant to Section 252(e) of the Act, an interconnection agreement incorporating the Commission's decisions as described above; and

4) Issue such other relief as is just and proper.

Respectfully submitted on this 20th day of May, 2005,

SPRINT COMMUNICATIONS COMPANY L.P.

By: Diane Browning

Diane C. Browning
6450 Sprint Parkway
Mailstop KSOPHN0212-2A511
Overland Park, KS 66251
Voice: 913-315-9284
Fax: 913-523-0571
diane.c.browning@mail.sprint.com

0499

CERTIFICATE OF SERVICE

The undersigned hereby certifies that the foregoing was served by Federal Express or U.S. mail, postage prepaid to the following on the 20th day of May, 2005:

Mr. Andy Pollock
Executive Director
Public Service Commission of Nebraska
1200 N St 300 The Atrium
Lincoln NE 68508

Elizabeth A. Sickel
Southeast Nebraska Telephone Company
110 W 17th St
Falls City NE 68355

Paul M. Schudel
Woods & Aiken LLP
301 S 13th St Ste 500
Lincoln NE 68508

Diane C. Browning

Diane C. Browning

ALLEN L. OVERCASH
PAUL M. SCHUDEL
EDWARD H. TRICKER
WM. LEE MERRITT
JOSEPH H. BADAMI
KERRY L. KESTER
ROBERT B. EVNEN
JOEL D. HEUSINGER
TERRY C. DOUGHERTY
JENNIFER J. STRAND
CRAIG C. DIRRIM
BRUCE A. SMITH
JEFFERY T. PEETZ
KENT E. ENDACOTT
KRISTA L. KESTER
JAMES A. OVERCASH
NATHAN J. GURNSEY
KORY D. GEORGE
ANDREW B. KOSZEWSKI
TODD W. WEIDEMANN
DAVID J. MCCLURE

WOODS & AITKEN
L · L · P

DEC 27 2004

LINCOLN OFFICE
SUITE 500
301 SOUTH 13TH STREET
LINCOLN, NEBRASKA 68508-2578
TELEPHONE 402-437-8500
FAX 402-437-8558

OMAHA OFFICE
SUITE 350
10250 REGENCY CIRCLE
OMAHA, NEBRASKA 68114-3754
TELEPHONE 402-898-7400
FAX 402-898-7401

WWW.WOODSAITKEN.COM
Please Respond to Lincoln Office

December 22, 2004

Email: PSchudel@woodsaitken.com
Direct Dial: (402) 437-8509

VIA UNITED STATES MAIL AND EMAIL

Monica M. Barone, Esq.
Mail Stop KSOPHN0212-2A203
6450 Sprint Parkway
Overland Park, Kansas 66251

Dear Monica:

Thank you for providing your December 16 letter in response to mine dated December 15, 2004. Certain points mentioned in your letter require further clarification or comment.

First, since your letter contains the initial identification of Sprint Communications Company, L.P. ("SCC") as the legal entity seeking interconnection, Southeast Nebraska Telephone Company ("SENTCO") will regard December 16, 2004 as the date of receipt of SCC's request.

Second, as you will note in the second paragraph of my December 15 letter to you, SENTCO did not condition negotiation of an interconnection arrangement upon the requesting party first obtaining a certificate. Rather, I noted that "certification is required prior to *implementing* any terms and conditions of an interconnection agreement." (emphasis added)

Third, in response to my request that you specifically identify the "interconnection, services or network elements" that are requested from SENTCO, you have referred SENTCO to the "diagrams depicting possible interconnection scenarios." With all due respect, the six diagrams depicted on the pages attached to Ms. Ruperto's November 13, 2004 letter are not sufficiently detailed to provide the specific information from which one could reasonably discern the aspect of Section 251(c) of the Communications Act of 1934, as amended (the "Act") that SCC contends is triggered by its request. In fact, one could reasonably interpret the diagrams you reference to implicate different provisions of Section 251 of the Act.

As you are aware, SCC, through its authorized representative, has affirmed under oath to the Nebraska Public Service Commission ("Commission") that SCC will abide by the requirements of Section 251(f) of the Act. *See generally* Testimony of James R. Burt, Application No. C-3204,

EXHIBIT 1

Transcript at 75-76. SCC's failure to respond with the specific information that SENTCO requested in my December 15 letter raises significant questions regarding SCC's representations to the Commission. Moreover, applicable Commission decisions suggest that Section 251(f) procedures must be addressed prior to any negotiations taking place. *See* Order, Application No. C-3228, issued November 23, 2004 at 5-6.

Accordingly, SENTCO renews its request that SCC "identify with particularity the nature of such "interconnection, services, or network elements" that it seeks from SENTCO." SENTCO December15, 2004 Letter at 1.

Finally, responsive to the next to last paragraph of your December 16 letter, SENTCO would like all future communications from SCC regarding this matter to be directed to me rather than to Ms. Sickel.

Very truly yours,

Paul M. Schudel

PMS|dh
cc: M. Gene Hand, Nebraska Public Service Commission
Elizabeth Sickel

EXHIBIT 2

INTERCONNECTION AND RECIPROCAL COMPENSATION AGREEMENT

BETWEEN

SOUTHEAST NEBRASKA TELEPHONE COMPANY

AND

SPRINT COMMUNICATIONS, L.P.

TABLE OF CONTENTS

			Page
I.	Article I		1
	1.0	INTRODUCTION	1
	2.0	RECITALS	1
II.	Article II		1
	1.0	DEFINITIONS	1
	2.0	INTERPRETATION AND CONSTRUCTION	4
	3.0	SCOPE	4
	4.0	SERVICE AGREEMENT	5
	5.0	COMPENSATION	6
	6.0	NOTICE OF CHANGES	7
	7.0	GENERAL RESPONSIBILITIES OF THE PARTIES	8
	8.0	TERM AND TERMINATION	8
	9.0	CANCELLATION CHARGES	9
	10.0	NON-SEVERABILITY	9
	11.0	INDEMNIFICATION	9
	12.0	LIMITATION OF LIABILITY	10
	13.0	DISCLAIMER	11
	14.0	REGULATORY APPROVAL	11
	15.0	PENDING JUDICIAL APPEALS AND REGULATORY RECONSIDERATION	11
	16.0	MOST FAVORED NATION PROVISION	12
	17.0	MISCELLANEOUS	12
	18.0	DISPUTE RESOLUTION	17

I. Article I

1.0 INTRODUCTION

This Interconnection and Reciprocal Compensation Agreement ("Agreement") shall be effective as of _____, 2005 (the "Effective Date"), by and between Southeast Nebraska Telephone Company ("SENTCO") with it principal place of business at 110 West 17th Street, Falls City, Nebraska 68355 and Sprint Communications, L. P., a Delaware limited partnership with its principal place of business at 6200 Sprint Parkway, Overland Park, Kansas 66251 ("Sprint").

2.0 RECITALS

WHEREAS, SENTCO is an incumbent Local Exchange Carrier providing Telephone Exchange Service and Exchange Access in the State of Nebraska;

WHEREAS, Sprint is authorized by the Commission to provide competitive local exchange telecommunications service within the State of Nebraska;

WHEREAS, SENTCO and Sprint wish to establish Interconnection and Reciprocal Compensation arrangements for exchanging traffic as specified below;

WHEREAS, SENTCO certifies that it is a rural telephone company and is exempt from Section 251(c) pursuant to Section 251(f) of the Communications Act of 1934, as amended by the Telecommunications Act of 1996 (the "Act");

WHEREAS, Sprint confirms to SENTCO that its request for interconnection with SENTCO was only intended to address the interconnection obligations under Section 251(a) and (b) of the Act and the procedures for negotiation, arbitration and approval of agreements under Section 252 of the Act;

WHEREAS, Sections 251 and 252 of the Act have specific requirements for Interconnection, and the Parties intend that this Agreement meets these requirements.

NOW, THEREFORE, in consideration of the mutual provisions contained herein and other good and valuable consideration, the receipt and sufficiency of which are hereby acknowledged, SENTCO and Sprint hereby agree as follows:

II. Article II

1.0 DEFINITIONS

Special meanings are given to common words in the telecommunications industry, and coined words and acronyms are common in the custom and usage in the industry. Words used in this contract are to be understood according to the custom and usage of the telecommunications industry, as an exception to the general rule of contract interpretation that words are to be

understood in their ordinary and popular sense. In addition to this rule of interpretation, the following terms used in this Agreement shall have the meanings as specified below:

1.1. "Act" means the Communications Act of 1934, as amended.

1.2. "Affiliate" means a person that (directly or indirectly) owns or controls, is owned or controlled by, or is under common ownership or control with, another person. For purposes of this paragraph, the term "own" means to own an equity interest (or the equivalent thereof) of more than 10 percent.

1.3. "End Office Switch" means a switch used to provide Telecommunications Service to subscribers and may include, but is not limited to one of the following:

(a) "Stand-Alone End Office Switch" is a switch in which the subscriber station loops are terminated for connection to either lines or trunks. The subscriber receives terminating, switching, signaling, transmission, and related functions for a defined geographic area by means of a Stand-Alone End Office Switch.

(b) "Remote End Office Switch" is a switch in which the subscriber station loops are terminated. The control equipment providing terminating, switching, signaling, transmission, and related functions would reside in a Host End Office Switch. Local switching capabilities may be resident in a Remote End Office Switch.

(c) "Host End Office Switch" is a switch with centralized control over the functions of one or more Remote End Office Switches. A Host End Office Switch can serve as a Stand-Alone End Office Switch as well as providing services to other Remote End Office Switches requiring terminating, signaling, transmission, and related functions including local switching.

1.4. "Commission" means the Public Service Commission of Nebraska.

1.5. "Effective Date" means the date first above written.

1.6. "End User or End User Customer" means the residence or business subscriber that is the ultimate user of Telecommunications Services provided by either of the Parties or by a third-party telecommunications carrier. **[NOTE: SENTCO's position is that a period should be placed following the word "Parties".]**

1.7. "Exchange Access" has the meaning given in the Act.

1.8. "FCC" means the Federal Communications Commission.

1.9. "Interconnection" for purposes of this Agreement is the linking of SENTCO and Sprint networks for the exchange of Local Traffic described in this Agreement.

1.10. "Interexchange Carrier" or "IXC" means a Telecommunications Carrier that

provides Telephone Toll Service, as defined in the Act

1.11. "ISP Bound Traffic" means traffic that is originated on the network of either of the Parties and is transmitted to or returned from the Internet at any point during the duration of the transmission; provided, however, that ISP Bound Traffic shall not include voice traffic.

1.12. "Local Service Area" means, the certified exchange service area within which SENTCO is authorized by the Commission to provide Telephone Exchange Service.

1.13. "Local Traffic" is defined for all purposes under this Agreement as traffic that is originated by and terminated to End Users physically located within the Local Service Area. Local Traffic includes traffic exchanged between the parties when some portion of such traffic is circuit switched but does not include ISP Bound Traffic.

1.14. "Local Exchange Carrier" or "LEC" is as defined in the Act.

1.15. "Non-Local Traffic" means any traffic that is not Local Traffic as defined above, but does not include ISP Bound Traffic.

1.16. "NPA" or the "Number Plan Area" also referred to as an "area code" refers to the three-digit code which precedes the NXX in a dialing sequence and identifies the general calling area within the North American Numbering Plan scope to which a call is routed (i.e., NPA/NXX-XXXX).

1.17. "NXX" means the three-digit code, which appears as the first three digits of a seven-digit telephone number within a valid NPA or area code.

1.18. "Party" means either SENTCO or Sprint, and "Parties" means SENTCO and Sprint.

1.19. "Point of Interconnection" ("POI") means that technically feasible point of demarcation located within SENTCO's network where the exchange of Local Traffic between the Parties takes place.

1.20. "Rate Center" means the specific geographic point and corresponding geographic area that is associated with one or more NPA-NXX codes that have been assigned to an incumbent LEC for its provision of Telecommunications Service.

1.21. "Reciprocal Compensation" means an arrangement between two carriers in which each receives compensation from the other carrier for the transport and termination on each carrier's network of Local Traffic, as defined in Section 1.13 above. **[NOTE: SENTCO requests the addition of the phrase "that originates on the network facilities of the other carrier" at the end of the preceding sentence.]**

1.22. "Telecommunications" has the meaning given in the Act.

1.23. "Telecommunications Carrier" has the meaning given in the Act.

1.24. "Telecommunications Service" has the meaning given in the Act.

1.25. "Telephone Exchange Service" has the meaning given in the Act.

1.26. "Telephone Toll Service" has the meaning given in the Act.

1.27. "Termination" means the switching of Local Traffic at the terminating carrier's End Office Switch, or equivalent facility, and delivery of such traffic to the called party.

1.28. "Transport" means the transmission of Local Traffic subject to Section 251(b)(5) of the Act from the Point of Interconnection between the Parties to the terminating carrier's End Office Switch that directly serves the called party, or equivalent facility provided by a carrier other than an incumbent LEC.

2.0 INTERPRETATION AND CONSTRUCTION

All references to Sections, Exhibits and Schedules shall be deemed to be references to Sections of, and Exhibits and Schedules to, this Agreement unless the context shall otherwise require. The headings of the Sections and the terms are inserted for convenience of reference only and are not intended to be a part of or to affect the meaning of this Agreement. Unless the context shall otherwise require, any reference to any agreement, other instrument or other third party offering, guide or practice, statute, regulation, rule or tariff is for convenience of reference only and is not intended to be a part of or to affect the meaning of a rule or tariff as amended and supplemented from time-to-time (and, in the case of a statute, regulation, rule or tariff, to any successor provision). The Parties acknowledge that some of the services, facilities, or arrangements described herein reference the terms of federal or state tariffs of the Parties. Each Party hereby incorporates by reference those provisions of any tariff that governs any terms specified in this Agreement. If any provision of this Agreement and an applicable tariff cannot be reasonably construed or interpreted to avoid conflict, the Parties agree that the conflicting provision contained in this Agreement shall prevail.

3.0 SCOPE

3.1. This Agreement is intended, inter alia, to describe and enable specific Interconnection and Reciprocal Compensation arrangements between the Parties. This Agreement does not obligate either Party to provide arrangements not specifically provided for herein.

3.2. This Agreement sets forth the terms, conditions, and rates under which the Parties agree to interconnect their networks for purposes of exchanging Local Traffic originated by the Parties' respective End Users.

3.3. Sprint represents that it is a provider of Telecommunications Service to End Users in Nebraska. Sprint's NPA/NXXs are listed in Telcordia's Local Exchange Routing Guide ("LERG"), and this Agreement shall apply to all Operating Company Numbers ("OCN") assigned to Sprint.

3.4. This Agreement is limited to SENTCO End Users' traffic for which SENTCO has

tariff authority to carry. SENTCO's NPA/NXXs are listed in the LERG under OCN 1591, in the State of Nebraska.

3.5. The traffic that is exchanged between the Parties through an Interexchange Carrier, on a toll basis, is not Local Traffic and is not subject to this Agreement, but rather is subject to Section 251(b)(3) and 251(g) of the Act.

4.0 SERVICE AGREEMENT

This Agreement provides for the following interconnection and arrangements between the networks of SENTCO and Sprint. Routing of traffic shall be as described in this section, except that, alternatives may be employed in the event of emergency or temporary equipment failure.

4.1. The Parties shall physically connect their networks via dedicated connections/circuits at the POI. Each Party shall be solely responsible for the cost and operation of the facilities to its side of the POI. The Parties acknowledge that options are available to each Party to accomplish such connections to the POI. These options include provision of dedicated circuits by the Party, provision of dedicated circuits arranged through third parties, or tariffed service offerings by SENTCO to the extent that Sprint so elects. If any third party is used by a Party to arrange for dedicated connection to the POI, such Party, in addition to bearing all costs associated with the use of such third party's network, shall be solely responsible for such third party's activities to accomplish such connection. If a Party elects to utilize a third party pursuant to this section, the other Party agrees to work cooperatively with such third party to establish and maintain the physical connection at the POI in a manner that is consistent with then existing industry technical standards.

4.2. Unless the Parties otherwise mutually agreed, all Local Traffic exchanged between the Parties shall be transmitted on trunks solely dedicated to such Local Traffic. Neither Party may terminate intra-LATA or inter-LATA toll switched access traffic or originate toll-free traffic over dedicated Local Traffic trunks. N11 codes (including but not limited to, 411, 611, & 911) shall not be sent between the Parties' networks via Local Traffic trunk groups. Local Traffic exchange shall be provided via two-way trunks where technically and operationally feasible unless both Parties agree to implement one-way trunks.

The Parties will cooperatively develop joint forecasting for traffic utilization over Local Traffic trunk groups provided pursuant to this Agreement. Orders for trunks that exceed forecasted quantities for forecasted locations will be accommodated as facilities and/or equipment becomes available. The Parties will make all reasonable efforts and cooperate in good faith to develop alternative solutions to accommodate orders when facilities are not available. Inter-company forecast information will be exchanged by the Parties upon reasonable request. The capacity of facilities provided by each Party will be based on mutual forecasts and sound engineering practice, as mutually agreed to by the Parties.

4.3. The Parties agree to exchange Local Traffic in a manner that is consistent with their respective duties to comply with applicable dialing parity requirements associated with such traffic.

5.0 COMPENSATION

5.1. Reciprocal Compensation is applicable for Transport and Termination of Local Traffic as defined in Section 1.13 and is related to the exchange of traffic described in Section 4. For the purposes of billing compensation for Local Traffic, billed minutes will be based upon records/reports provided by third parties or actual recorded usage. Measured usage begins when the terminating recording End Office Switch receives answer supervision from the called End User and ends when the terminating End Office Switch receives or sends disconnect (release message) supervision, whichever occurs first. The measured usage is aggregated at the end of the measurement cycle and rounded to a whole minute. Billing for Local Traffic shall be based on the aggregated measured terminating usage to SENTCO less traffic recorded as local that is Non-Local Traffic. Notwithstanding any provision to the contrary set forth herein, the Parties agree that Reciprocal Compensation for Transport and Termination of Local Traffic shall be determined on the basis of actual recorded usage. Further, and notwithstanding any provision to the contrary set forth herein, the Parties agree to exchange ISP Bound Traffic in accordance with Section 5.2.

5.2. The Parties agree to exchange ISP Bound Traffic in accordance with the Order on Remand by the FCC in CC Docket No. 96-98 on April 27, 2001. Specifically, SENTCO has not offered or adopted the FCC's rate caps as set forth in that Order; pursuant to paragraph 81 of that Order, SENTCO is required to pay intercarrier compensation for ISP Bound Traffic on a bill and keep basis. Further, the Parties acknowledge that because they did not exchange any ISP Bound Traffic pursuant to an interconnection agreement prior to the date of the above-referenced Order, all minutes of ISP Bound Traffic are to be exchanged on a bill and keep basis between the Parties in accordance with paragraph 81 of the Order, such that neither Party owes the other Party any compensation for the origination, transport or termination of such traffic.

5.3. The rate for Reciprocal Compensation shall be $0.024 per minute.

5.4. Non-Local Traffic shall be terminated to a Party subject to that Party's tariffed access charges. Each Party warrants and represents that it will not provision any of its services or exchange any traffic hereunder in a manner that permits the unlawful avoidance of the application of intrastate or interstate access charges by any other party including, but not limited to, third party carriers, aggregators and resellers. Each Party also agrees to take all reasonable steps to terminate any service to an End User that permits such End User to unlawfully avoid the application of access charges by the other Party. Telecommunications traffic to or from End Users that originates or terminates in areas other than the Local Service Area is subject to intrastate or interstate access charges regardless of whether the traffic may have been converted to Internet Protocol or any other transmission protocol during the routing and transmission of the call.

5.5. The following provisions shall apply to calculation of payments and billings:

5.5.1. SENTCO will compensate Sprint for Local Traffic delivered by SENTCO to Sprint for termination, as prescribed in Section 5.1, at the rate provided in Section 5.3, above. Sprint will compensate SENTCO for Local Traffic delivered to SENTCO for termination to SENTCO's End Users as prescribed in Section 5.1 at the rate provided in Section 5.3. As applicable, the Parties will compensate each other for Non-Local Traffic at the rates provided in Section 5.4

5.5.2. Each Party shall prepare monthly billing statement(s) to the other Party, that will separately reflect the calculation of Reciprocal Compensation payable pursuant to Sections 5.1 and 5.3 and access charges pursuant to Section 5.4.

6.0 NOTICE OF CHANGES

If a Party contemplates a change in its network, which it believes will materially affect the inter-operability of its network with the other Party, the Party making the change shall provide at least ninety (90) days advance written notice of such change to the other Party.

7.0 GENERAL RESPONSIBILITIES OF THE PARTIES

7.1. The Parties are each solely responsible for participation in and compliance with national network plans, including The National Network Security Plan and The Emergency Preparedness Plan. Each Party shall solely be responsible for its Communications Assistance for Law Enforcement Act ("CALEA") enforcement-related activity. Each Party shall also ensure that it takes all actions necessary for a full response to any CALEA and/or other law enforcement-related inquiry related in any manner to the originating/terminating traffic from an End User it serves and that such actions are completed in a timely manner. In the event that either Party fails to comply with any one or more of these obligations and an action is brought or costs imposed upon the other Party, the Party that failed to comply shall indemnify the other Party pursuant to the requirements of Section 11.0 of this Agreement. Neither Party shall use any service provided pursuant to this Agreement in any manner that prevents other persons from using or adversely impacts their Telecommunications Service, and subject to notice and a reasonable opportunity of the offending Party to cure any violation, either Party may discontinue or refuse service if the other Party violates this provision.

7.2. Both Parties agree to utilize SS7 Common Channel Signaling ("SS7") between their respective networks for the exchange of traffic addressed in this Agreement in order to track and monitor the traffic that is being exchanged at the POI. Both Parties shall provide SS7 connectivity in accordance with accepted industry practice and standard technical specifications, and shall exchange all originally-generated SS7 messages for call set-up, including without limitation, ISDN User Part ("ISUP") and Transaction Capability User Part ("TCAP") messages, and SS7-based features and functions between their respective networks, including CLASS features and functions.

7.3. Each Party is responsible for obtaining Local Exchange Routing Guide ("LERG")

listings of the Common Language Location Identifier ("CLLI") assigned to its switches.

7.4. 911/E911. Each Party is solely responsible for the receipt and transmission of 911/E911 traffic originated by End Users of its Telephone Exchange Service. The Parties acknowledge that calls to 911/E911 services shall not be routed over the interconnection trunk group(s). To the extent that a Party incorrectly routes such traffic over such arrangements, that Party shall fully indemnify and hold harmless the other Party for any claims, including claims of third parties, related to such calls.

8.0 TERM AND TERMINATION

8.1. Subject to the provisions of Section 14, the initial term of this Agreement shall be for a one (1) year term (the "Initial Term"), which shall commence on the Effective Date, and thereafter shall continue on a month to month basis, unless terminated or modified pursuant to the terms and conditions of this Agreement.

8.2. Either Party may request this Agreement to be renegotiated at any time after the expiration of the Initial Term. The Party desiring renegotiation shall provide written notice to the other Party. Not later than thirty (30) days following receipt of such notice, the receiving Party will acknowledge receipt of the written notice and the Parties will commence negotiation, which shall be conducted in good faith, except in cases in which this Agreement has been terminated for default. Provided the Parties are pursuing negotiation or arbitration of a new Agreement, this Agreement will continue in full force and effect until such new Agreement is effective.

8.3. If, within one hundred and thirty-five (135) days following the date of written notice of desire to renegotiate referred to in the preceding section, the Parties are unable to negotiate new terms, conditions and prices for a new agreement between the Parties, either Party may petition the Commission to establish appropriate terms, conditions and prices for such new agreement pursuant to 47 U.S.C. § 252. Any pricing terms and conditions of the new agreement between the Parties arrived at through negotiation and/or arbitration shall be retroactively effective as of the date of the written request seeking renegotiation. Unless the Parties otherwise mutually agree, true-ups or adjustments arising from any new pricing terms and conditions shall be implemented as of the effective date of the new agreement described herein.

8.4. The Parties agree that disputed and undisputed amounts due under this Agreement shall be handled as follows:

8.4.1. If any portion of an amount due to a Party (the "Billing Party") under this Agreement is subject to a bona fide dispute between the Parties, the Party billed (the "Non-Paying Party") shall, within thirty (30) days of its receipt of the invoice containing such disputed amount, give written notice to the Billing Party of the amounts it disputes ("Disputed Amounts") and include in such notice the specific details and reasons for disputing each item. The Non-Paying Party shall pay when due all undisputed amounts to the Billing Party. The Parties will work together in good faith to resolve issues relating to the disputed amounts. If the

dispute is resolved such that payment of the disputed amount is required, whether for the original full amount or for the settlement amount, the Non-Paying Party shall pay the full disputed or settlement amounts with interest at the lesser of (i) one and one-half percent (1-1/2%) per month or (ii) the highest rate of interest that may be charged under Nebraska's applicable law. In addition, the Billing Party may initiate a complaint proceeding with the appropriate regulatory or judicial entity, if unpaid undisputed amounts become more than 90 days past due, provided the Billing Party gives an additional 30 days notice and opportunity to cure the default.

8.4.2. Any undisputed amounts not paid when due shall accrue interest from the date such amounts were due at the lesser of (i) one and one-half percent (1-1/2%) per month or (ii) the highest rate of interest that may be charged under Nebraska's applicable law.

8.4.3. Undisputed amounts shall be paid within thirty (30) days of receipt of invoice from the Billing Party.

8.5. Upon termination or expiration of this Agreement in accordance with this section:

(a) Each Party shall comply immediately with its obligations as set forth in Section 8.2 above;

(b) Each Party shall promptly pay all amounts (including any late payment charges) owed under this Agreement;

(c) Each Party's indemnification obligations shall survive termination or expiration of this Agreement.

8.6. Either Party may terminate this Agreement in whole or in part in the event of a default of the other Party, provided, however, that the non-defaulting Party notifies the defaulting Party in writing of the alleged default and the defaulting Party does not implement mutually acceptable steps to remedy such alleged default within thirty (30) days after receipt of written notice thereof.

9.0 CANCELLATION CHARGES

Except as provided herein, no cancellation charges shall apply.

10.0 NON-SEVERABILITY

10.1. The services, arrangements, terms and conditions of this Agreement were mutually negotiated by the Parties as a total arrangement and are intended to be non-severable.

10.2. Nothing in this Agreement shall be construed as requiring or permitting either Party to contravene any mandatory requirement of federal or state law, or any regulations or orders adopted pursuant to such law.

11.0 INDEMNIFICATION

11.1. Each Party (the "Indemnifying Party") shall indemnify and hold harmless the other Party ("Indemnified Party") from and against loss, cost, claim, liability, damage, and expense (including reasonable attorney's fees) to End Users and other third parties for:

(a) damage to tangible personal property or for personal injury proximately caused by the negligence or willful misconduct of the Indemnifying Party, its employees, agents or contractors;

(b) claims for libel, slander, or infringement of copyright arising from the material transmitted over the Indemnified Party's facilities arising from the Indemnifying Party's own communications or the communications of such Indemnifying Party's End Users; and

(c) claims for infringement of patents arising from combining the Indemnified Party's facilities or services with, or the using of the Indemnified Party's services or facilities in connection with, facilities of the Indemnifying Party.

Notwithstanding this indemnification provision or any other provision in the Agreement, neither Party, nor its parents, subsidiaries, affiliates, agents, servants, or employees, shall be liable to the other for Consequential Damages (as defined in Section 12.3).

11.2. The Indemnified Party will notify the Indemnifying Party promptly in writing of any claims, lawsuits, or demands by End Users or other third parties for which the Indemnified Party alleges that the Indemnifying Party is responsible under this section, and, if requested by the Indemnifying Party, will tender the defense of such claim, lawsuit or demand in the event:

(a) The Indemnifying Party does not promptly assume or diligently pursue the defense of the tendered action, then the Indemnified Party may proceed to defend or settle said action and the Indemnifying Party shall hold harmless the Indemnified Party from any loss, cost liability, damage and expense.

(b) The Party otherwise entitled to indemnification from the other elects to decline such indemnification, then the Party making such an election may, at its own expense, assume defense and settlement of the claim, lawsuit or demand.

11.3. The Parties will cooperate in every reasonable manner with the defense or settlement of any claim, demand, or lawsuit.

11.4. Neither Party shall accept the terms of a settlement that involves or references the other Party in any matter without the other Party's approval.

12.0 LIMITATION OF LIABILITY

12.1. No liability shall attach to either Party, its parents, subsidiaries, affiliates, agents, servants, employees, officers, directors, or partners for damages arising from errors, mistakes, omissions, interruptions, or delays in the course of establishing, furnishing, rearranging, moving, terminating, changing, or providing or failing to provide services or facilities (including the obtaining or furnishing of information with respect thereof or with respect to users of the services or facilities) in the absence of gross negligence or willful misconduct.

12.2. Except as otherwise provided in Section 11.0, no Party shall be liable to the other Party for any loss, defect or equipment failure caused by the conduct of the first Party, its agents, servants, contractors or others acting in aid or concert with that Party, except in the case of gross negligence or willful misconduct.

12.3. Except as otherwise provided in Section 11.0, no Party shall have any liability whatsoever to the other Party for any indirect, special, consequential, incidental or punitive damages, including but not limited to loss of anticipated profits or revenue or other economic loss in connection with or arising from anything said, omitted or done hereunder (collectively, "Consequential Damages"), even if the other Party has been advised of the possibility of such damages.

13.0 DISCLAIMER

EXCEPT AS OTHERWISE PROVIDED HEREIN, NEITHER PARTY MAKES ANY REPRESENTATIONS OR WARRANTIES, EXPRESS OR IMPLIED, INCLUDING BUT NOT LIMITED TO ANY WARRANTY AS TO MERCHANTABILITY OR FITNESS FOR INTENDED OR PARTICULAR PURPOSE WITH RESPECT TO SERVICES PROVIDED HEREUNDER. ADDITIONALLY, NEITHER PARTY ASSUMES ANY RESPONSIBILITY WITH REGARD TO THE CORRECTNESS OF DATA OR INFORMATION SUPPLIED BY THE OTHER PARTY WHEN THIS DATA OR INFORMATION IS ACCESSED AND USED BY A THIRD-PARTY.

14.0 REGULATORY APPROVAL

The Parties understand and agree that this Agreement will be filed with the Commission. Each Party covenants and agrees to fully support approval of this Agreement by the Commission. The Parties, however, reserve the right to seek regulatory relief and otherwise seek redress from each other regarding performance and implementation of this Agreement. In the event the Commission rejects this Agreement in whole or in part, the Parties agree to meet and negotiate in good faith to arrive at a mutually acceptable modification of the rejected portion(s). Further, this Agreement is subject to change, modification, or cancellation as may be required by a regulatory authority or court in the exercise of its lawful jurisdiction.

The Parties agree that their entrance into this Agreement is without prejudice to any positions they may have taken previously, or may take in future, in any legislative,

regulatory, judicial or other public forum addressing any matters, including matters related to the same types of arrangements covered in this Agreement.

15.0 PENDING JUDICIAL APPEALS AND REGULATORY RECONSIDERATION

The Parties acknowledge that the respective rights and obligations of each Party as set forth in this Agreement are based on the text of the Act and the rules and regulations promulgated thereunder by the FCC and the Commission as of the Effective Date ("Applicable Rules"). In the event of any amendment to the Act, any effective legislative action or any effective regulatory or judicial order, rule, regulation, arbitration award, dispute resolution procedures under this Agreement or other legal action purporting to apply the provisions of the Act to the Parties or in which the FCC or the Commission makes a generic determination that is generally applicable which revises, modifies or reverses the Applicable Rules (individually and collectively, Amended Rules), either Party may, by providing written notice to the other Party, require that the affected provisions of this Agreement be renegotiated in good faith and this Agreement shall be amended accordingly to reflect the pricing, terms and conditions of each such Amended Rules relating to any of the provisions in this Agreement.

16.0 MOST FAVORED NATION PROVISION

Nothing in this Agreement shall alter or affect the rights of either Party pursuant to Section 252(i) of the Act.

17.0 MISCELLANEOUS

17.1. Authorization.

17.1.1. SENTCO is a corporation duly organized, validly existing and in good standing under the laws of the State of Nebraska and has full power and authority to execute and deliver this Agreement and to perform its obligations hereunder, subject to any necessary regulatory approval.

17.1.2. Sprint Communications, L.P. is a limited partnership duly organized, validly existing and in good standing under the laws of the state of Delaware, authorized to do business in the state of Nebraska and has full power and authority to execute and deliver this Agreement and to perform its obligations hereunder, subject to any necessary regulatory approval.

17.2. Compliance. Each Party shall comply with all applicable federal, state, and local laws, rules, and regulations applicable to its performance under this Agreement.

17.3. Independent Contractors. Neither this Agreement, nor any actions taken by Sprint or SENTCO in compliance with this Agreement, shall be deemed to create an agency or joint venture relationship between Sprint and SENTCO, or any relationship other than that of purchaser and seller of services. Neither this Agreement, nor any actions taken by Sprint or SENTCO in compliance with this Agreement, shall create a contractual, agency,

or any other type of relationship or third party liability between Sprint and SENTCO end users or others.

17.4. Force Majeure. Neither Party shall be liable for any delay or failure in performance of any part of this Agreement from any cause beyond its control and without its fault or negligence including, without limitation, acts of nature, acts of civil or military authority, government regulations, embargoes, epidemics, terrorist acts, riots, insurrections, fires, explosions, earthquakes, nuclear accidents, floods, work stoppages, equipment failure, power blackouts, volcanic action, other major environmental disturbances, unusually severe weather conditions or any other circumstances beyond the reasonable control and without the fault or negligence of the Party affected (collectively, a "Force Majeure Event"). If any Force Majeure condition occurs, the Party delayed or unable to perform shall give immediate notice to the other Party and shall take all reasonable steps to correct the force majeure condition. During the pendency of the Force Majeure, the duties of the Parties under this Agreement affected by the Force Majeure condition shall be abated and shall resume without liability thereafter.

17.5. Record Retention. During the Initial Term and any extended period that this Agreement is in effect, and within forty-five (45) days of a written request from either Party (the "Requesting Party"), the other Party (the "Providing Party") shall provide one complete month of all the call records associated with the traffic subject to Section 5.1, 5.2 and 5.4 (the "Test Month") that the Providing Party delivers to the Requesting Party through the Point of Interconnection ("POI") established under the Agreement; provided, however, that the Test Month selected shall not be older than 12 months from the date of the request. The call records shall conform to the then prevailing industry standard record format (or such other standard industry format as established from time to time). The first request in a given year of a Requesting Party for the call records of the Providing Party shall be provided to the Requesting Party at no charge. Any reasonable costs associated directly with additional requests in that same year for call records shall be borne by the Requesting Party, provided, however, that the Requesting Party is not required to pay such costs if it demonstrates that at least 30% of the traffic associated with those records falls outside of Section 5.1 of this Agreement. Each Party shall reasonably cooperate with the other in any investigation under this Section.

17.6. Confidentiality.

17.6.1. Any information such as specifications, drawings, sketches, business information, forecasts, models, samples, data, computer programs and other software and documentation of one Party (a Disclosing Party) that is furnished or made available or otherwise disclosed to the other Party or any of its employees, contractors, or agents (its "Representatives" and with a Party, a "Receiving Party") pursuant to this Agreement ("Proprietary Information") shall be deemed the property of the Disclosing Party. Proprietary Information, if written, shall be clearly and conspicuously marked "Confidential" or "Proprietary" or other similar notice, and, if oral or visual, shall be confirmed in writing as confidential by the Disclosing Party to the Receiving Party within ten (10) days after disclosure. Unless Proprietary Information was previously known by the

Receiving Party free of any obligation to keep it confidential, or has been or is subsequently made public by an act not attributable to the Receiving Party, or is explicitly agreed in writing not to be regarded as confidential, such information: (1) shall be held in confidence by each Receiving Party; (ii) shall be disclosed to only those persons who have a need for it in connection with the provision of services required to fulfill this Agreement and shall be used by those persons only for such purposes; and (iii) may be used for other purposes only upon such terms and conditions as may be mutually agreed to in advance of such use in writing by the Parties. Notwithstanding the foregoing sentence, a Receiving Party shall be entitled to disclose or provide Proprietary Information as required by any governmental authority or applicable law, upon advice of counsel, only in accordance with Section 17.6.2 of this Agreement.

17.6.2. If any Receiving Party is required by any governmental authority or by applicable law to disclose any Proprietary Information, then such Receiving Party shall provide the Disclosing Party with written notice of such requirement as soon as possible and prior to such disclosure. The Disclosing Party may then seek appropriate protective relief from all or part of such requirement. The Receiving Party shall use all commercially reasonable efforts to cooperate with the Disclosing Party in attempting to obtain any protective relief, which such Disclosing Party chooses to obtain.

17.6.3. In the event of the expiration or termination of this Agreement for any reason whatsoever, each Party shall return to the other Party or destroy all Proprietary Information and other documents, work papers and other material (including all copies thereof) obtained from the other Party in connection with this Agreement and shall use all reasonable efforts, including instructing its employees and others who have had access to such information, to keep confidential and not to use any such information, unless such information is now, or is hereafter disclosed, through no act, omission or fault of such Party, in any manner making it available to the general public.

17.7. Governing Law. For all claims under this Agreement that are based upon issues within the jurisdiction (primary or otherwise) of the FCC, the exclusive jurisdiction and remedy for all such claims shall be as provided for by the FCC and the Act. For all claims under this Agreement that are based upon issues within the jurisdiction (primary or otherwise) of the Commission, the exclusive jurisdiction for all such claims shall be with the Commission, and the exclusive remedy for such claims shall be as provided for by such Commission. In all other respects, this Agreement shall be governed by the domestic laws of the State of Nebraska without reference to conflict of law provisions.

The terms and conditions of this Agreement shall be subject to any and all applicable laws, rules, regulations or guidelines that subsequently may be adopted by any federal, state, or local government authority. Any modifications to this Agreement occasioned by such change shall be effected through good faith negotiations.

17.8. Taxes. Each Party purchasing services hereunder shall pay or otherwise be

responsible for all federal, state, or local sales, use, excise, gross receipts, transaction or similar taxes, fees or surcharges levied against or upon such purchasing Party (or the providing Party when such providing Party is permitted to pass along to the purchasing Party such taxes, fees or surcharges), except for any tax on either Party's corporate existence, status or income. Whenever possible, these amounts shall be billed as a separate item on the invoice. To the extent a sale is claimed to be for resale tax exemption, the purchasing Party shall furnish the providing Party a proper resale tax exemption certificate as authorized or required by statute or regulation by the jurisdiction providing said resale tax exemption. Failure to timely provide such sale for resale tax exemption certificate will result in no exemption being available to the purchasing Party.

17.9. Assignment. This Agreement shall be binding upon the Parties and shall continue to be binding upon all such entities regardless of any subsequent change in their ownership. Each Party covenants that, if it sells or otherwise transfers to a third party, unless the Party which is not the subject of the sale or transfer reasonably determines that the legal structure of the transfer vitiates any such need, it will require as a condition of such transfer that the transferee agree to be bound by this Agreement with respect to services provided over the transferred facilities. Except as provided in this paragraph, neither Party may assign or transfer (whether by operation of law or otherwise) this Agreement (or any rights or obligations hereunder) to a third party without the prior written consent of the other Party which consent will not be unreasonably withheld; provided that either Party may assign this Agreement to a corporate Affiliate or an entity under its common control or an entity acquiring all or substantially all of its assets or equity by providing prior written notice to the other Party of such assignment or transfer. Any attempted assignment or transfer that is not permitted is void ab initio. Without limiting the generality of the foregoing, this Agreement shall be binding upon and shall inure to the benefit of the Parties' respective successors and assigns.

17.10. Non-Waiver. Failure of either Party to insist on performance of any term or condition of this Agreement or to exercise any right or privilege hereunder shall not be construed as a continuing or future waiver of such term, condition, right or privilege.

17.11. Notices.

17.11.1. Notices given by one Party to the other Party under this Agreement shall be in writing and shall be: (i) delivered personally; (ii) delivered by express delivery service; (iii) mailed, certified mail, return receipt requested to the following addresses of the Parties:

Sprint:
Sprint Communications, L.P.
6450 Sprint Parkway
Overland Park, Kansas 66251
Attn: Director, Wholesale and
Interconnection Management
Phone Number: 913-315-9081

SENTCO:
Southeast Nebraska Telephone Co.
110 West 17th Street
Falls City, NE 68355
Attn: Elizabeth A Sickel, VP/Gen. Mgr
Phone Number: 402-245-4451
Fax Number: 402-245-4770

With a copy to:
Paul M. Schudel
Woods & Aitken, LLP
301 South 13th Street, Suite 500
Lincoln, Nebraska 68508
Phone Number: 402-437-8500
Fax Number: 402-437-8558

Or to such other address as either Party shall designate by proper notice. Notices will be deemed given as of the earlier of: (i) the date of actual receipt; (ii) the next business day when notice is sent via express mail or personal delivery; (iii) three (3) days after mailing in the case of certified U.S. mail.

17.11.2. In order to facilitate trouble reporting and to coordinate the repair of Interconnection Facilities, trunks, and other interconnection arrangements provided by the Parties under this Agreement, each Party has established contact(s) available 24 hours per day, seven days per week, at telephone numbers to be provided by the Parties. Each Party shall call the other at these respective telephone numbers to report trouble with connection facilities, trunks, and other interconnection arrangements, to inquire as to the status of trouble ticket numbers in progress, and to escalate trouble resolution.

24-Hour Network Management Contact:

For SENTCO:
NOC/Repair Contact Number: 402-245-4451 (Mon.-Fri. 8-5);
After Hours: 402-245-4905 or 402-245-2728 or 402-245-4577
Facsimile Number: 402-245-4770

For Sprint:
NOC/Repair Contact Number: 1-888-862-8293

Before either Peports a trouble condition, it must first use its reasonable efforts to isolate the trouble to the other Party's facilities, service, and arrangements. Each Party will advise the other of any critical nature of the inoperative facilities, service, and arrangements and any need for expedited clearance of trouble. In cases where a Party has indicated the essential or critical need for restoration of the facilities, services or arrangements, the other Party shall use its best efforts to expedite the clearance of trouble.

17.12. Publicity and Use of Trademarks or Service Marks. Neither Party nor its subcontractors or agents shall use the other Party's trademarks, service marks, logos or other proprietary trade dress in any advertising, press releases, publicity matters or other promotional materials without such Party's prior written consent.

17.13. Joint Work Product. This Agreement is the joint work product of the Parties and has been negotiated by the Parties and their respective counsel and shall be fairly

interpreted in accordance with its terms. In the event of any ambiguities, no inferences shall be drawn against either Party.

17.14. No Third Party Beneficiaries; Disclaimer of Agency. This Agreement is for the sole benefit of the Parties and their permitted assigns, and nothing herein expressed or implied shall create or be construed to create any third-party beneficiary rights hereunder. Except for provisions herein expressly authorizing a Party to act for another, nothing in this Agreement shall constitute a Party as a legal representative or agent of the other Party; nor shall a Party have the right or authority to assume, create or incur any liability or any obligation of any kind, express or implied, against, in the name of, or on behalf of the other Party, unless otherwise expressly permitted by such other Party. Except as otherwise expressly provided in this Agreement, no Party undertakes to perform any obligation of the other Party, whether regulatory or contractual, or to assume any responsibility for the management of the other Party's business.

17.15. No License. No license under patents, copyrights, or any other intellectual property right (other than the limited license to use consistent with the terms, conditions and restrictions of this Agreement) is granted by either Party, or shall be implied or arise by estoppel with respect to any transactions contemplated under this Agreement.

17.16. Technology Upgrades. Nothing in this Agreement shall limit either Parties' ability to upgrade its network through the incorporation of new equipment, new software or otherwise, provided it is to industry standards, and that the Party initiating the update shall provide the other Party written notice at least ninety (90) days prior to the incorporation of any such upgrade in its network which will materially impact the other Party's service. Each Party shall be solely responsible for the cost and effort of accommodating such changes in its own network.

17.17. Entire Agreement. The terms contained in this Agreement and any Schedules, Exhibits, tariffs and other documents or instruments referred to herein are hereby incorporated into this Agreement by reference as if set forth fully herein, and constitute the entire agreement between the Parties with respect to the subject matter hereof, superseding all prior understandings, proposals and other communications, oral or written. Neither Party shall be bound by any preprinted terms additional to or different from those in this Agreement that may appear subsequently in the other Party's form documents, purchase orders, quotations, acknowledgments, invoices or other communications. This Agreement may only be modified by a writing signed by an officer of each Party.

18.0 DISPUTE RESOLUTION

Except as provided under Section 252 of the Act with respect to the approval of this Agreement by the State Commission, the Parties desire to resolve disputes arising out of or relating to this Agreement without litigation. Accordingly, except for action seeking a temporary restraining order or an injunction related to the purposes of this Agreement, or suit to compel compliance with this dispute resolution process, the Parties

agree to use the following dispute resolution procedures with respect to any controversy or claim arising out of or relating to this Agreement or its breach.

18.1. Informal Resolution of Disputes. At the written request of a Party, each Party will appoint a knowledgeable, responsible representative, empowered to resolve such dispute, to meet and negotiate in good faith to resolve any dispute arising out of or relating to this Agreement. The Parties intend that these negotiations be conducted by non-lawyer, business representatives. The location, format, frequency, duration, and conclusion of these discussions shall be left to the discretion of the representatives. Upon agreement, the representatives may utilize other alternative dispute resolution procedures such as mediation to assist in the negotiations. Discussions and correspondence among the representatives for purposes of these negotiations shall be treated as Confidential Information developed for purposes of settlement, exempt from discovery, and shall not be admissible in the arbitration described below or in any lawsuit without the concurrence of all Parties. Documents identified in or provided with such communications, which are not prepared for purposes of the negotiations, are not so exempted and my, if otherwise discoverable, be discovered or otherwise admissible, be admitted in evidence, in the arbitration or lawsuit.

18.2. Formal Dispute Resolution. If negotiations pursuant to Section 18.1 fail to produce an agreeable resolution within ninety (90) days, then either Party may proceed with any remedy available to it pursuant to law, equity or agency mechanisms; provided, that upon mutual agreement of the Parties such disputes may also be submitted to binding arbitration. In the case of an arbitration, each Party shall bear its own costs. The Parties shall equally split the fees of any mutually agreed upon arbitration procedure and the associated arbitrator.

18.3. Continuous Service. The Parties shall continue providing services to each other during the pendency of any dispute resolution procedure, and the Parties shall continue to perform their payment obligations (including making payments in accordance with Section 4, 5, and 6) in accordance with this Agreement.

IN WITNESS WHEREOF, the Parties hereto have caused this Agreement to be executed as of the dates listed below.

Sprint Communications, L.P.	Southeast Nebraska Telephone Company
By:_____	By:_____
Name: _____	Name: _____
Title: _____	Title: _____
Date: _____	Date: _____

0523

FILE

BEFORE THE NEBRASKA PUBLIC SERVICE COMMISSION

IN RE:	)	
	)	
SPRINT COMMUNICATIONS	)	
COMPANY L.P. PETITION FOR	)	APPLICATION NO. C-3429
ARBITRATION UNDER THE	)	
TELECOMMUNICATIONS ACT	)	

MOTION TO DISMISS OR, IN THE ALTERNATIVE, RESPONSE OF SOUTHEAST NEBRASKA TELEPHONE COMPANY TO PETITION FOR ARBITRATION

Southeast Nebraska Telephone Company ("SENTCO") hereby files this Motion to Dismiss or, in the Alternative, Response to the Petition of Sprint Communications Company L.P. ("Sprint") for resolution of issues relating to an interconnection agreement under the terms of Section 251(b) of the Communications Act of 1934, as amended (the "Act").

1. On May 23, 2005, Sprint filed a petition (the "Petition") with the Nebraska Public Service Commission ("Commission") to arbitrate issues remaining unresolved after negotiations for an interconnection agreement between Sprint and SENTCO pursuant to Section 252 of the 1996 revisions to the Act. *See* Pub. L. No. 104-104, 110 Stat. 56 (1996) (codified at 47 U.S.C. § 151, *et seq.*).

2. SENTCO is an incumbent local exchange carrier ("ILEC") and is a Nebraska corporation authorized by the Commission to provide local exchange service in Nebraska. The contact information concerning SENTCO set forth in the Petition under the heading "Parties" is accurate. The telephone number for Ms. Sickel is 402-245-4451 and the telephone number for Mr. Schudel, lead counsel for SENTCO, is 402-437-8500. Additional contact information for SENTCO's counsel is provided below.

RECEIVED
JUN 17 2005
NEBRASKA PUBLIC SERVICE COMMISSION

Exhibit
2
8-10-05

3. SENTCO is filing this Motion to Dismiss (the "Motion") or, in the alternative, Response to Sprint's Petition (the "Response") in an effort to ensure the most efficient utilization of the resources of the Commission and the parties in this proceeding. With respect to the portion of this filing labeled as "Response," SENTCO notes that it is being filed voluntarily pursuant to 47 U.S.C. § 252(b)(3). In the event that the Motion is not granted, SENTCO wishes to set forth its position on certain matters relating to the issues in this arbitration while reserving all rights to (and without waiver of its rights with respect to) the matters raised in the Motion. As such, nothing in the Response section of this filing can or should be construed as an admission or in conflict with the basis provided below as to why the Petition should be dismissed in its entirety.

I. JURISDICTION

4. For the reasons stated below, the Commission should dismiss the Petition in its entirety. Sprint does not possess the status of "telecommunications carrier" and thus cannot assert rights under Section 251(b) for the interconnection arrangements it seeks when Sprint acts as an enabler/vendor for a third party, the only of which identified by Sprint being Time Warner Cable ("TWC").[1] *See* 47 U.S.C. §252(a)(1); *see also* Petition at 3-4.[2] Sprint has alleged no fact in its Petition to support its contention that it possesses the status of a "telecommunications carrier" when it complies with its private contractual obligations to TWC. Quite to the contrary, Sprint admits facts that demonstrate it is not a telecommunications carrier. Sprint admits that it has a private

---

[1] SENTCO notes that Sprint references "Time Warner Cable." SENTCO presumes that this reference is to Time Warner Cable Information Services, LLC d/b/a Time Warner Cable, an entity that the Commission has certified as a local exchange carrier in Application No. C-3228 on November 23, 2004.

[2] While SENTCO agreed to voluntary negotiations with Sprint, SENTCO did not agree to negotiate arrangements "without regard to the standards set forth in subsection[ ] (b) . . .of Section 251." 47 U.S.C. §252(a)(1). See Attachment A.

agreement with TWC which was individually negotiated with TWC. Moreover, Sprint admits that it will not be the ultimate provider of end user services to any retail business or residential customer physically located in SENTCO's Fall City exchange. Accordingly, the Commission should dismiss the Petition in its entirety because Sprint is not a telecommunications carrier.

5. Even if Sprint were a telecommunications carrier (a finding that is entirely at odds with Sprint's admissions), the Petition should still be dismissed. Sprint has not demonstrated nor even alleged any fact within the Petition that it will provide retail end user services to customers within the SENTCO's Falls City exchange. The agreement at issue (*see* Petition, Exhibit 2) is to establish a reciprocal compensation arrangement pursuant to Section 251(b)(5) of the Act between the parties for the exchange of specifically identified end user traffic. Section 251(b)(5) arrangements are limited to telecommunications carriers with networks that "originate" the local traffic subject to Section 251(b)(5). Sprint cannot assert any Section 251(b) rights in this proceeding because, as Sprint admits, only TWC's network will "originate" end user traffic in SENTCO's local exchange area and any switching directly serving the calling end user is provided by TWC. Accordingly, the Petition, on its face, is deficient. The time window for submitting an arbitration petition has closed and Sprint is now barred from making any new substantive allegations in this proceeding. Any effort by Sprint to amend its Petition at this late date would unalterably change the substance of the Petition, an action that falls outside of the Act's 135 to 160 day arbitration request window. *See* 47 U.S.C. §252(b).

6. Assuming, *arguendo,* that the Petition is not dismissed on either of the grounds noted above (and without waiver of its rights and position regarding the dismissal), the Commission's jurisdiction to consider the Petition filed by Sprint pursuant to the Act, to resolve disputed issues, and to approve an interconnection agreement between the parties would be found in 47 U.S.C. § 252(c).

II. BACKGROUND

7. SENTCO concurs with Sprint that Exhibit 2 attached to the Petition is a true and correct copy of the proposed draft Interconnection and Reciprocal Compensation Agreement (the "Agreement") between Sprint and SENTCO that reflects both the disputed and undisputed terms and conditions consistent with the parties' negotiations. SENTCO notes that the agreement was negotiated solely with respect to the situation where Sprint would be the competing provider for retail end user customers physically located within the SENTCO Falls City exchange. In the event that SENTCO identifies additional provisions on which the parties disagree, other than those identified in the Agreement, SENTCO reserves the right to bring such matters before the Commission and respectfully requests that the Commission also resolve those issues.

8. While Sprint has identified two issues in its Petition, the two stated issues are grounded on the common issue as to whether Sprint is entitled to include provisions in the Agreement to facilitate Sprint's business model in which Sprint provides a variety of private carrier transport and back office, vendor-like services to other competitive service providers (*see* Petition at 4), and specifically with regard to Sprint's private "business arrangement" with TWC. *Id.* at 3-4. As Sprint has admitted, TWC "provides

the 'last mile' network over hybrid fiber coaxial cable facilities, marketing and sales, end use billing, and customer service." *Id.*

9. The evidence introduced by Sprint in Commission Application No. C-3204 confirms that Sprint does not intend to provide local exchange service to end users in the SENTCO exchanges. In the Commission's Order entered in Application No. C-3204 on February 8, 2005, at page 2, the Commission found:

> Initially, Sprint proposes to provide transport, switching and interconnection for the origination and termination of local and long distance traffic. These services will be provided upon request of wholesale customers within the state of Nebraska. No deposits will be required. *Sprint intends to partner with cable companies who want to provide local and long distance service.* One such relationship exists with Time Warner Cable, whose CLEC application was granted on November 23, 2004. *Time Warner Cable will provide end user billing, marketing and sales, customer service and customer access. Sprint provides wholesale services that enable the Time Warner Cable retail service.* (emphasis added)

Subsequently, on page 4 of such Order the Commission further found:

> Sprint also testified that customer contact would ultimately be the responsibility of the carrier to whom Sprint provides its wholesale service.

10. SENTCO notes that this is the first occasion for the Commission to address the issues described above regarding a rural ILEC operating in the State of Nebraska. However, the identical issues described above have been presented by Sprint in other states and have been the subject of recent decisions. On May 26, 2005, the Iowa Utilities Board ("IUB") issued its Order in *Sprint Communications Company L.P. v. Ace Communications Group, et al.,* Docket No. ARB-05-2, and a true and correct copy of such Order is attached to this Response as Attachment B. In such Order at pages 17-18, the IUB held:

> The motions [to dismiss the petitions for arbitration] are granted with respect to the assertions that Sprint Communications Company, L.P., is not a

"telecommunications carrier" within the meaning of § 153(44) of the Act in the RLEC exchanges and therefore does not have the right to invoke the compulsory arbitration process under § 252 of the Act.

11. Also, the holding in the Proposed Order entered by the Administrative Law Judge in *Cambridge Telephone Company, et al. Petitions for Declaratory Relief,* Cases No. 05-259, *et seq.* (Ill. Comm. Comn. May 15, 2005) at page 12 is as follows:

> It is therefore ordered by the Illinois Commerce Commission that because Sprint Communications, L.P. d/b/a Sprint Communications Company L.P. is not a "telecommunications carrier" in the context of its relationship with MCC Telephony of Illinois, Inc., Petitioners have no obligation to negotiate with Sprint Communications, L.P. d/b/a Sprint Communications Company L.P., or any similarly situated entity, under subsections (a) and (b) of Section 251 of the federal Telecommunications Act.

A true and correct copy of the above-quoted Proposed Order is attached to this Response as Attachment C. SENTCO is in the process of compiling a list of all proceedings concerning the enabler issue.

III. MOTION TO DISMISS

12. The fundamental flaw in Sprint's legal position with regard to the enabler issue is Sprint's claim that Sprint is a "telecommunications carrier" as defined in Section 153(44) of the Act when it acts in its role as providing purported "wholesale" services that enable other carriers, such as Time Warner Cable, to provide retail services to end users.

13. While Sprint claims in the Petition that in its "enabler" role it is a telecommunications carrier that will be providing "telecommunications services" as defined in § 153(46) of the Act, it is clear (and Sprint admits) that in actuality TWC is the local exchange carrier that will be responsible for providing local exchange services to the public. As Sprint has stated, it is TWC that will be providing the "last mile" network

and "marketing and sales" and "end user billing" and "customer service." Petition at 4. Sprint's acknowledged role is that of an entity providing contract services to TWC. *See id.*

14. A necessary condition for an entity to assert rights under §§ 251 (a) or (b) of the Act is that it must be a "telecommunications carrier" under § 153(44) of the Act. Section 153(44) defines "telecommunications carrier" as "any provider of telecommunications services, except that such term does not include aggregators of telecommunications services (as defined in Section 226)." Section 153(46), in turn, defines "telecommunications service" as "the offering of telecommunications for a fee directly to the public, or to such classes of users as to be effectively available directly to the public, regardless of the facilities used."

15. Sprint does not propose to offer any telecommunications service to the public and would have no direct relationship with any end user whose traffic would be exchanged under the Agreement. Rather, Sprint has entered into a contract with TWC to provide certain services and such services are not available to the public in the SENTCO exchanges.

16. Relevant Federal Communications Commission ("FCC") and judicial precedents have interpreted the "telecommunications carrier" definition to include only those entities that "common carriers." Under the undisputed facts, Sprint is not holding itself out as a common carrier in the SENTCO Falls City exchange and thus, Sprint is not a "telecommunications carrier" in such exchanges for the purpose of invoking the arbitration procedures of § 252 of the Act. *See, Virgin Islands Telephone v. FCC,* 198 F.3d 921 (D.C.Cir. 1999) ("*VITELCO*") and *National Ass'n of Regulatory Util. Comm'rs*

v. FCC, 525 F.2d 630 (D.C. Cir. 1976) ("*NARUC I*"). Sprint, in its contract relationship with TWC, is not "holding oneself out to serve indiscriminately" (*NARUC-I,* 525 F.2d at 642), which the *VITELCO* court made clear is the "key determinant" (*VITELCO,* 198 F.3d at 927) of common carrier/telecommunications carrier status.

17. Since Sprint does not intend to offer its proposed services in the SENTCO Falls City exchanges to any party other than TWC pursuant to the individually-negotiated contract with TWC, Sprint is not holding itself out to serve all potential users indiscriminately. As such, Sprint is not a common carrier under *NARUC I,* and therefore is not a "telecommunications carrier" under § 153(46) as interpreted by the *Virgin Islands* Court and the FCC.

18. The decision of the Public Utilities Commission of Ohio in the case of *In the Matter of the Application and Petition in Accordance with Section II.A.2.b of the Local Service Guidelines Filed by: The Champaign Telephone Company, et al.,* Case No. 04-1494-TP-UNC, *et. seq.,* Findings and Order, Jan. 26, 2005, cited by Sprint in the Petition, improperly failed to consider the principles established by *NARUC I* and *Virgin Islands.* Such decision by the PUCO was appropriately criticized by the IUB and by the Illinois Administrative Law Judge in the decisions, copies of which are attached as Attachments B and C, respectively. While SENTCO is aware that the New York Public Service Commission has addressed the TWC/Sprint relationship, the relevant case law noted by Illinois and Iowa was not addressed in the decision. *See Order Resolving Arbitration Issues,* Cases 05-C-0170 and 05-C-0183, (the New York Public Service Commission, May 24, 2005).

19. Based on the facts as plead by Sprint, and those the Commission is well aware of based on its decision in Application No. C-3204, Sprint "third party business arrangements" (Petition at 6) are private, individually negotiated arrangements with telecommunications carriers such as TWC (*see* Application No. C-3228) to provide network arrangements on a private carrier basis or other vendor-like services such as retention of numbering resources, managing inter-carrier compensation and various directory listing and related services. To be sure, the record is void of any individually negotiated contract carrier offering or an agreement filed with the Commission for approval between Sprint and TWC.

20. This Commission must conclude that Sprint is a *non-telecommunications carrier* (*i.e.*, a private carrier or vendor) when Sprint provides its purported "wholesale" non-retail end user services to TWC. Accordingly, the Commission should dismiss the Petition, thereby avoiding further expenditure of resources by the Commission and the parties in this matter. That result, in turn, not only advances the public interest, but SENTCO respectfully submits that the dismissal of the Petition ensures proper application of the construct under which Congress sought to ensure that telecommunications carriers, *and only telecommunications carriers,* should be permitted to seek interconnection under Section 251 and compete for retail end user customers.

21. Even if the Commission were to look past the admissions of Sprint and applicable case law which supports the dismissal of the Petition for the reasons stated above, the Commission should still dismiss the Petition. Taken on its face, the Petition is devoid of any allegation that suggests that Sprint would serve retail end user customers physically located within SENTCO's exchange. Put another way, Sprint's Petition is

0532

solely addressing its need for an interconnection agreement ("ICA") to effect its private business/contractual arrangements with TWC. The issues raised by Sprint, however, relate solely to the parameters under which the parties would exchange traffic subject to the reciprocal compensation obligations of Section 251(b)(5) of the Act. Those obligations, however, apply only to the carriers operating the "originating" network.

22. Congress, in establishing the pricing standards for reciprocal compensation, stated clearly that "such terms and conditions provide for the mutual and reciprocal recovery by each carrier of costs associated with the transport and termination on each carrier's network *of calls that originate on the network facilities of the other carrier.*" 47 U.S.C. § 252(d)(2)(ii) (emphasis added). Sprint admits that some other "third party" owns the "last mile" over which the end user will "originate" a call. *See* Petition at 4. The "origination" of a call occurs *only* on the network of the ultimate provider of end user service. The FCC has confirmed this analysis.

> We define "transport," for purposes of section 251(b)(5), as the transmission of terminating traffic that is subject to section 251(b)(5) from the interconnection point between the two carriers to the terminating carrier's end office switch that *directly serves the called party (or equivalent facility provided by an non-incumbent carrier).*

In the Matter of Implementation of the Local Competition Provisions in the Telecommunications Act of 1996; Interconnection between Local Exchange Carriers and Commercial Radio Service Providers, First Report and Order, CC Docket Nos. 96-98 and 95-185, 11 FCC Rcd 15499 (1996) ("*FCC Interconnection Order*") at 16015 (¶1039) (emphasis added). As the middle man in a "third party business arrangement " (Petition at 6), Sprint *does not* "directly serve[ ] the called party." *FCC Interconnection Order* at

16015 (¶1039). The equivalent facility is "the 'last mile' network" operated by TWC. Petition at 4.

23. Accordingly, to allow Sprint to assert Section 251(b)(5) rights, Sprint would need to operate the originating network, which is not stated in the Petition. To now expand the Petition to include a suggestion that Sprint wants to utilize the ICA to provide retail end user services to compete directly with SENTCO, *i.e.*, that Sprint would be operating the "originating" network that "directly serves" the end user making a call, would materially modify the Petition. Such a substantive revision to the Petition is time barred by the Act since the amendment falls outside Congress' 135 to 160 time frame established for arbitration requests. See 47 U.S.C. §252(b). Thus, the Petition should be dismissed for this independent reason.

IV. RESPONSE TO ARBITRATION ISSUES RAISED BY SPRINT

24. Assuming, *arguendo,* that the Commission does not dismiss the Petition in its entirety for the reasons stated in Section III, *supra,* SENTCO without waiving any of its rights or positions stated above, hereby responds to the issues raised in Sprint's Petition.

25. Issue No. 1 presented by Sprint is:

> **Should the definition of "End User or End User Customer" include end users of a service provider for whom Sprint provides interconnection and other telecommunications services? (Section 1.6 and as applied elsewhere in the Agreement.)**

26. Sprint claims "the NPSC has already contemplated and endorsed Sprint's business arrangement with Time Warner in Sprint's CLEC Certification Order." While SENTCO disputes Sprint's characterization of the Commission's Order entered in Application No. C-3204 on February 8, 2005, and notes the obvious fact that the terms of

such Order speak for themselves, such claim is entirely irrelevant to the resolution of Issue No. 1. Also irrelevant is Sprint's recitation of other arrangements it has entered with telephone companies in other states. *See* Petition at 4. Telephone companies, if they wish, are free to negotiate arrangements outside of the Act. (*see* 47 U.S.C. §251(a)(1)) However, SENTCO has elected, as is its right, *not* to negotiate an arrangement outside of the Act with Sprint.[3] Finally, Sprint's reliance on an FCC decision regarding directory listing and call completion is incomplete. *See* Petition at 8. Sprint fails to acknowledge that the FCC went on to state that when a directory assistance ("DA") provider is designated by a CLEC or another carrier (such as the case here where Sprint has entered into a private, individually negotiated "third party business arrangement[ ]" with TWC (*id.* at 6)), the DA providers' rights are subject to the terms and conditions of the ICA that the CLEC or other carrier has with the LEC whose database is being accessed. *See Provision of Directory Listing Information under the Telecommunications Act of 1934, As Amended, First Report and Order,* 16 FCC Rcd. 2736, 2748 (¶27)(2001)

27. With this background and with respect to the issue Sprint frames above, the appropriate answer is "no." Reciprocal compensation is only applicable to those carriers where they are the originating network provider directly serving the retail end user making the calls. *See* Section III,¶¶12-23, *supra.*

28. Thus, SENTCO respectfully requests that the Commission reject Sprint's additional language and adopt SENTCO's proposed end user definition.

---

[3] Sprint's reference to an FCC statement regarding Unbundled Networks Elements ("UNEs") is misleading. UNEs are required to be offered by non-rural ILECs under Section 251(c), a section not applicable to SENTCO because it is a rural telephone company as defined under the Act see 47 U.S.C. §153(37) and 47 U.S.C. §251(f)(1)). Moreover, this proceeding does not address any Section 251 (c) issue.

29. Issue No. 2 presented by Sprint is:

Should the definition of "Reciprocal Compensation" include the transportation and termination on each carrier's network of all Local Traffic? (Section 1.21 and as applied elsewhere in the Agreement.)

30. In the Petition, Sprint's discussion of this Issue is essentially limited to a summary reiteration of the arguments advanced in support of Sprint's position concerning Issue No. 1. SENTCO submits that not only are such arguments equally unavailing concerning Issue No. 2, but also there are additional obvious flaws in Sprint's position regarding this Issue.

31. Consistent with Section 252(d)(2)(a) and the *FCC Interconnection Order* (¶1039), SENTCO's position is that the phrase "that originates on the network facilities of the other carrier" should be added to the language of Section 1.21 of the Agreement which, as proposed by Sprint reads:

> "Reciprocal Compensation" means an arrangement between two carriers in which each receives compensation from the other carrier for the transport and termination on each carrier's network of Local Traffic, as defined in Section 1.13 above.

For the reasons stated in Issue 1, the "Local Traffic" at issue must be limited to traffic that is originated by and terminated to end users who are customers of either Sprint or SENTCO (the parties to the Agreement), as opposed to end user customers of a non-party to the Agreement such as TWC.

32. Based upon Sprint's stated service intentions in the SENTCO Falls City exchange, no Sprint end user customers will originate any traffic on which reciprocal compensation will be owed, and will not terminate any traffic on which Sprint will be owed reciprocal compensation by SENTCO. The reason for this is simple – Sprint will have no end user customers in the SENTCO exchange. If and when it does have its own

end user customers originating and terminating traffic in the SENTCO exchanges, the terms of the Agreement worded as proposed by SENTCO, would apply.

33. SENTCO reiterates the points and arguments in support of its positions concerning Issue No. 1 as set forth in paragraphs 24 through 28, *supra,* with regard to Issue No. 2 as if fully set forth herein. Accordingly, SENTCO respectfully requests that the Commission, should it need to, resolve Issue No. 2 as proposed by SENTCO.

34. To the extent not admitted in the preceding paragraphs, SENTCO denies each and every of the allegations set forth in the Petition, except to the extent that any of such allegations constitute admissions against the interests of Sprint.

RELIEF REQUESTED

SENTCO respectfully requests that the Commission issue its Order herein:

(1) Dismissing Sprint's Petition for Arbitration for the reason that Sprint is not a "telecommunications carrier" within the meaning of § 153(44) of the Act in the SENTCO exchanges and therefore has no right to invoke the compulsory arbitration process under § 252 of the Act;

(2) Dismissing Sprint's Petition for Arbitration for the reason that Sprint has not alleged that it will be the originating network for end users directly served by it and thus it cannot sustain any Section 251(b)(5) and is likewise time barred from involving the compulsory arbitration process under § 252 of the Act;

(3) Assuming, *arguendo,* that the Petition is not dismissed in its entirety for the reasons stated, requiring the parties to enter into an interconnection agreement that includes all of the terms agreed to by the parties, but excludes any and all provisions that actually or purportedly would exclude end user customers of third parties that are non-

parties to the Agreement from the scope of the Agreement, resolving Issues No. 1 and 2 in favor of SENTCO, and requiring Sprint and SENTCO to file for approval, pursuant to Section 252(e) of the Act, the Agreement with terms and conditions that conform with the above-described resolution of the Issues; and

(4) Granting SENTCO such other and further relief as may be equitable and proper.

Dated this 17th day of June 2005.

Respectfully submitted,

SOUTHEAST NEBRASKA TELEPHONE COMPANY

By: _____

Paul M. Schudel, #13723
James A. Overcash, #18627
WOODS & AITKEN LLP
301 South 13th Street, Suite 500
Lincoln, Nebraska 68508
(402) 437-8500

and

Thomas J. Moorman, D.C. Bar No. 384790
KRASKIN, MOORMAN & COSSON, LLC
2120 L Street, N.W., Suite 520
Washington, D.C. 20037
(202) 296-8890
Its Attorneys

0538

CERTIFICATE OF SERVICE

The undersigned hereby certifies that a true and correct copy of the foregoing **Motion to Dismiss or, in the Alternative, Response of Southeast Nebraska Telephone Company to Petition for Arbitration** has been served via hand-delivery upon Gene Hand, Director of Telecommunications, and upon Shana Knutson, Staff Attorney, 300 The Atrium, 1200 N Street, Lincoln, NE 68508, and by United States Mail upon Sprint Communications Company L.P.'s attorney, Diane C. Browning, 6450 Sprint Parkway, Mailstop KSOPHN0212-2A511, Overland Park, KS 66251, on this 17th day of June, 2005.

James A. Overcash

0539

ALLEN L. OVERCASH
PAUL M. SCHUDEL
EDWARD H. TRICKER
WM. LEE MERRITT
JOSEPH H. BADAMI
KERRY L. KESTER
ROBERT B. EVNEN
JOEL D. HEUSINGER
TERRY C. DOUGHERTY
JENNIFER J. STRAND
CRAIG C. DIRRIM
BRUCE A. SMITH
JEFFERY T. PEETZ
KENT E. ENDACOTT
KRISTA L. KESTER
JAMES A. OVERCASH
NATHAN J. GURNSEY
KORY D. GEORGE
ANDREW B. KOSZEWSKI
TODD W. WEIDEMANN
DAVID J. MCCLURE

WOODS & AITKEN
L · L · P

LINCOLN OFFICE
SUITE 500
301 SOUTH 13TH STREET
LINCOLN, NEBRASKA 68508-2578
TELEPHONE 402-437-8500
FAX 402-437-8558

OMAHA OFFICE
SUITE 350
10250 REGENCY CIRCLE
OMAHA, NEBRASKA 68114-3754
TELEPHONE 402-898-7400
FAX 402-898-7401

WWW.WOODSAITKEN.COM

FILE Corr

January 12, 2005

Email: Pschudel@woodsaitken.com
Direct Dial: (402) 437-8509

Please Respond to Lincoln Office

VIA EMAIL AND U.S. MAIL

Monica M. Barone, Esq.
Mail Stop KSOPHN0212-2A203
6450 Sprint Parkway
Overland Park, Kansas 66251

Dear Monica:

On behalf of Southeast Nebraska Telephone Company ("SENTCO"), this letter responds to your January 5, 2005 correspondence written on behalf of Sprint Communications Company L.P. ("Sprint"). You may be correct that a call between us may have assisted efforts to resolve the confusion created by Sprint's various "stops and starts" that have occurred with respect to the nature of the interconnection that Sprint seeks from SENTCO. One constructive step that we can accomplish at this point is to assure that our respective files are complete with regard to prior communications between our clients on this subject. SENTCO received communications during 2004 from three Sprint representatives, Nicole E. Corsair, John Chuang and Vanessa J. Ruperto relating to interconnection matters. Several of such communications were in the form of emails. Because the attachments to your letter to me represent only a portion of such communications, I have attached copies of the remaining communications between Sprint and SENTCO that bear upon this matter of which I am aware. If you are aware of any other relevant communications, please feel free to share them with me.

From the outset, I want to make sure that you are aware of SENTCO's position regarding Sprint's communications concerning interconnection. In order to establish a clear understanding as to the nature of the interconnection sought by Sprint, SENTCO has consistently asked for information that would assist it in evaluating Sprint's request. The attached documentation confirms this fact. However, Sprint has consistently either declined to specify the interconnection arrangement it seeks from SENTCO or has modified the nature of such arrangement. Ms. Sickel's letter to John Chuang dated September 9, 2004 (a copy of which is attached to your January 5 letter), specifically stated that SENTCO "would be willing to discuss a voluntary schedule as a basis

Attachment A

for future discussions," assuming responses were provided to SENTCO's questions seeking additional information. Any inference in your letter that SENTCO is refusing to discuss interconnection matters with Sprint does not accurately portray the record of communications between the parties.

In any event, your January 5 letter still does not provide additional clarity to the unanswered question SENTCO has recently raised. Namely, what aspect of Section 251(c) does Sprint believe its request triggers? In fact, a reasonable reading of your January 5 letter creates additional questions.

For example, there is an inference in early paragraphs of your letter that Sprint's transmittal of the November 13 letter to the Nebraska Public Service Commission was an error, culminating in your explicit statement on page 2 (paragraph 2) that Sprint "is **not** seeking UNEs, resale or collocation. Sprint is not sure what else it can provide at this point." (emphasis in original). From these statements, one might conclude that Section 251(c) is not implicated at all in Sprint's request. On the other hand, your very next statement is that the "parties must sit down to discuss Sprint's proposal so that Sprint and SENTCO can jointly determine if Section 251(c) obligations are even implicated and thus, whether the Section 251(f)(1) rural exemption is even an issue."[1] Quite frankly, it is Sprint, *and not SENTCO*, that must determine what it seeks, and the implications that arise therefrom as relates to Section 251(c) and Section 251(f)(1).

Similarly, SENTCO does not know how to interpret your discussion of the Commission's policies and procedures established in the Order entered in Application No. C-3228 with respect to addressing requests for interconnection in which Sprint's purported "enabler" status is implicated. If Sprint's November 13 letter was transmitted to SENTCO to address Sprint's services to retail end user customers, then please say so. If not, then the procedures provided in the C-3228 Order appear to be relevant. To that end, it may simply be more efficient for both Sprint and SENTCO to seek the Commission's guidance on this aspect of your letter, particularly since SENTCO has notified the Commission previously that such direction was necessary. *See* attached copy of my letter to Mr. Hand dated December 23, 2004.

Rather than continue to belabor these points, however, SENTCO believes it would be constructive for the parties to participate in a meeting facilitated by one or more representatives of the Commission and/or its Staff. The purpose of such meeting would be solely to discuss the nature of the interconnection arrangement that Sprint seeks from SENTCO and to exchange information

---

[1] You mention later that "I am sure you are aware, a rural carrier is only relieved of its obligations under 251(c) of the Act (until the relevant Commission lifts the rural carrier's exemption)." Possibly a drafting error occurred in this aspect of your letter because I am not sure I fully understand your use of the term "until" in the context of your sentence. In any event, I can agree that the Act makes clear that a rural telephone company's exemption from the requirements established in Section 251(c) continues until the state commission removes the exemption pursuant to the procedures established in Section 251(f)(1).

that would ensure each party understands the scope of the request being made. The Commission's involvement will not only help us address the impact of the Commission's Order in Application No. C-3228 on Sprint's November 13 correspondence, but moreover such involvement should also facilitate achievement of Sprint's stated goal of ending "the apparent continued confusion" (an objective that SENTCO fully supports). As such, subject to identifying a mutually acceptable date for all parties, SENTCO agrees that this meeting should take place by the January 19 date you mention or as soon thereafter as possible.

In the spirit of ensuring clarity with respect to SENTCO's position, and based on your letter, SENTCO envisions that our discussion would address Section 251(b) arrangements that Sprint seeks from SENTCO as it relates to the services that Sprint will be providing to its retail end users. SENTCO's Section 251(a) offerings to other carriers are reflected in its exchange access tariffs. The discussion regarding the Commission's Order entered in Application No. C-3228 would address whether the Commission or its Staff believes that the procedures established in that decision apply. While SENTCO does not understand that Sprint has adopted a contrary position, SENTCO also wants to make clear that it does not intend to engage in discussions with respect to arrangements that are "without regard to the standards set forth in subsection[ ] (b) . . . of section 251." 47 U.S.C. §252(a)(1). To the extent that Sprint may seek to discuss any arrangement that is "without regard" to the established interconnection standards and controlling rules associated with Sections 251(b) of the Act, please let me know. Finally, each party would reserve its respective rights under Section 251(f)(1) of the Act in the event such rights are asserted at a later date

SENTCO looks forward to your response. SENTCO reaffirms its request that all correspondence regarding this matter be sent to me. If, in the future, SENTCO determines a different procedure should be used, I will let you know.

Very truly yours,

Paul M. Schudel

PMS|dh
Enclosures
cc: Mr. M. Gene Hand, Nebraska Public Service Commission (Via Hand Delivery, w/encls.)
Angela Melton, Esq., Nebraska Public Service Commission (Via Hand Delivery, w/encls.)
Elizabeth Sickel (via Email and US Mail, w/encls.)

STATE OF IOWA

DEPARTMENT OF COMMERCE

UTILITIES BOARD

IN RE ARBITRATION OF: SPRINT COMMUNICATIONS COMPANY L.P., Petitioning Party, vs. ACE COMMUNICATIONS GROUP, CLEAR LAKE INDEPENDENT TELEPHONE COMPANY, FARMERS MUTUAL COOPERATIVE TELEPHONE CO. OF SHELBY, FARMERS TELEPHONE COMPANY, FARMERS MUTUAL TELEPHONE COMPANY, GRAND RIVER MUTUAL TELEPHONE CORPORATION, HEART OF IOWA COMMUNICATIONS COOPERATIVE, HEARTLAND TELECOMMUNICATIONS COMPANY OF IOWA d/b/a HICKORYTECH, HUXLEY COMMUNICATIONS, IOWA TELECOMMUNICATIONS SERVICES, INC., d/b/a IOWA TELECOM f/k/a GTE MIDWEST, KALONA COOPERATIVE TELEPHONE, LA PORTE CITY TELEPHONE COMPANY, LEHIGH VALLEY COOPERATIVE TELEPHONE ASSOCIATION, LOST NATION-ELWOOD TELEPHONE COMPANY, MINBURN TELECOMMUNICATIONS, INC., ROCKWELL COOPERATIVE TELEPHONE ASSOCIATION, SHARON TELEPHONE, SHELL ROCK TELEPHONE COMPANY d/b/a BEVCOMM c/o BLUE EARTH VALLEY TELEPHONE COMPANY, SOUTH CENTRAL COMMUNICATIONS, INC., SOUTH SLOPE COOPERATIVE TELEPHONE COMPANY, SWISHER TELEPHONE COMPANY, VAN BUREN TELEPHONE COMPANY, INC., VENTURA TELEPHONE COMPANY, INC., VILLISCA FARMERS TELEPHONE COMPANY, WEBSTER CALHOUN COOPERATIVE TELEPHONE ASSOCIATION, WELLMAN COOPERATIVE TELEPHONE ASSOCIATION, and WEST LIBERTY TELEPHONE COMPANY d/b/a LIBERTY COMMUNICATIONS, Responding Parties.	DOCKET NO. ARB-05-2

ORDER GRANTING MOTIONS TO DISMISS

(Issued May 26, 2005)

Attachment B

PROCEDURAL HISTORY AND BACKGROUND

On March 31, 2005, Sprint Communications Company L.P. (Sprint) filed a petition with the Utilities Board (Board) requesting arbitration of certain terms and conditions of a proposed interconnection agreement between Sprint and several rural incumbent local exchange carriers,[1] hereinafter referred to as the RLECs. The petition was filed pursuant to § 252(b) of the Communications Act of 1934, as amended by the Telecommunications Act of 1996, Pub. L. No. 101-104, 110 Stat. 56 (1996) (hereinafter referred to as the "Act"). Although there are 27 individual interconnection agreements that underlie this arbitration petition, the unresolved issues are identical for each individual RLEC. Sprint filed one petition for arbitration and asked that the Board treat the filing as a consolidated petition for arbitration with respect to each RLEC identified and consider the issues in one docket. On April 12, 2005, the Board granted that request and identified the matter as Docket No. ARB-05-2.

On April 13, 2005, Heartland Telecommunications Company of Iowa, d/b/a HickoryTech (Heartland), filed a motion to dismiss Sprint's petition as not timely.

[1] Ace Communications Group, Clear Lake Independent Telephone Company, Farmers Mutual Cooperative Telephone Co. of Shelby, Farmers Telephone Company, Farmers Mutual Telephone Company, Grand River Mutual Telephone Corporation, Heart of Iowa Communications Cooperative, Heartland Telecommunications Company of Iowa d/b/a HickoryTech, Huxley Communications, Iowa Telecommunications Services, Inc. d/b/a Iowa Telecom f/k/a GTE Midwest, Kalona Cooperative Telephone, La Porte City Telephone Company, Lehigh Valley Cooperative Telephone Association, Lost Nation-Elwood Telephone Company, Minburn Telecommunications, Inc., Rockwell Cooperative Telephone Association, Sharon Telephone, Shell Rock Telephone Company d/b/a BEVCOMM c/o Blue Earth Valley Telephone Company, South Central Communications, Inc., South Slope Cooperative Communications Company, Swisher Telephone Company, Van Buren Telephone Company, Inc., Ventura Telephone Company, Inc., Villisca Farmers Telephone Company, Webster Calhoun Cooperative Telephone Association, Wellman Cooperative Telephone Association, and West Liberty Telephone Company d/b/a Liberty Communications.

Heartland alleges that Sprint's petition was filed on March 31, 2005, but that Sprint has admitted that the "window" for filing for arbitration under the act does not open until May 4, 2005. In support of this statement, Heartland attaches two letters it received from Sprint in February and March of 2005, in which Sprint indicates that the window for arbitration will open on May 4, 2005, and close on May 31, 2005.

On April 15, 2005, the RLEC Group[2] filed a motion to dismiss and a response to the petition. The RLEC Group moves to dismiss because, it argues, Sprint is not a competitive local exchange carrier, or CLEC, that is authorized to provide local exchange service in any of the exchanges served by the RLEC Group. The RLEC Group also asserts that the petition should be dismissed because Sprint is not a "telecommunications carrier" within the meaning of § 153(44) of the Act because Sprint does not provide, or intend to provide, local exchange service to end-users in any of the RLEC Group exchanges.

The RLEC Group also asserts that the Sprint petition is untimely and should therefore be dismissed. The RLEC Group points out that Sprint's original requests for negotiation stated that the date of the notices, October 20, 2004, "shall serve as the starting point for the one hundred thirty-five (135) day negotiation window under Section 252." Counting days from October 20, 2005, the RLEC Group alleges that the arbitration window closed March 29, 2005, so the petition missed the window.

Finally, the RLEC Group points to Sprint's letters of February 15 and March 23, 2005, in which Sprint represented the arbitration window as being from

[2] Being all of the RLECs except Iowa Telecommunications Services, Inc., d/b/a Iowa Telecom.

May 4 to May 31, 2005. The RLEC Group asserts its members have been prejudiced by the filing of the petition in advance of that window because "[t]his matter could have been resolved during the month of April with some time for contract discussions, if the arbitration window was open in accord with the Sprint letter." (RLEC Group motion to dismiss at page 7.)

Also on April 15, 2005, Iowa Telecommunications Services, Inc., d/b/a Iowa Telecom (Iowa Telecom), filed a motion to dismiss and response to the petition for arbitration. The Iowa Telecom motion is substantially similar to the RLEC Group motion.

On April 19, 2005, Sprint filed a response to the Heartland motion to dismiss, pointing out that § 252(b)(1) of the Act provides that either party to a proposed interconnection agreement may petition a state commission for arbitration during the period from the 135th to the 160th day, inclusive, after the date on which the incumbent local exchange carrier received the request for negotiation. Attached to Sprint's response is an overnight mail receipt showing that Heartland received Sprint's request for negotiations on October 22, 2004, so pursuant to statute the arbitration window was open from March 4, 2005, through March 31, 2005. Sprint admits that its letters of February 18 and March 23, 2005, inadvertently substituted the word "May" for "March" when reciting these dates, but asserts Heartland was not prejudiced by this error.

On April 26, 2005, Sprint filed a response to the motions to dismiss filed by Iowa Telecom and the RLEC Group. With regard to the timeliness issue, Sprint

makes the same response as it made to Heartland: The requests were received by the companies on October 22, 2005, so the last day to request arbitration was March 31, 2005, the date that Sprint filed its petition. As to the typographical errors in the letters of February 18 and March 23, 2005, Sprint asserts that the RLECs were not prejudiced by the error because they were not negotiating with Sprint at any time, so they cannot credibly claim that the matter might have been resolved by negotiations during the month of April.

As to the other issues raised by the RLEC Group and Iowa Telecom motions to dismiss, Sprint asserts that it is a telecommunications carrier offering telecommunications service under § 153(44) and § 153(46) of the Act because MCC Telephony of Iowa, Inc. (MCC), will be the "customer-facing" retail provider of local exchange services in the RLEC exchanges while Sprint will be providing interconnection and other telecommunications services to MCC. Sprint points out that § 153(46) of the Act defines "telecommunications services" as the "offering of telecommunications for a fee directly to the public, or to such class of users as to be effectively available directly to the public, regardless of the facilities used." Sprint argues that its proposed services fall within this definition.

Sprint also argues that its status as a certificated CLEC in any of the movants' exchanges is not dispositive of the issue of whether Sprint has a right to interconnect pursuant to §§ 251(a) and (b) of the Act. Sprint argues it is a local exchange carrier by virtue of providing "telephone exchange service" as defined in § 153(47) of the Act because Sprint will be providing local exchange service through its arrangements

with MCC and other providers. Thus, the end-users, or subscribers, will not subscribe directly with Sprint, but Sprint's switches, transmission equipment, and other facilities will be used by the subscribers to complete calls.

On April 29, 2005, the RLEC Group, Iowa Telecom, and Sprint all filed briefs in support of their positions regarding the motions to dismiss. The briefs expand on the respective positions of the parties, as described above, but for purposes of this order a separate summary of the briefs is not required. The cases and other authorities relied upon in the briefs will be discussed in the Board's analysis as relevant.

SUMMARY OF ARGUMENTS AND BOARD DISCUSSION

ISSUE ONE: Whether Sprint's petition is timely.

RLEC Position: In all the notices attached to Sprint's March 31, 2005, petition for arbitration, the date of the bona fide request was shown as October 20, 2004. The RLECs maintain that, based on the initial representations of Sprint as to the starting date of the 135-day negotiation window under Section 252, the window was open on March 4, 2005, and closed on March 29, 2005.

The RLECs also provide letters from Sprint representing that the arbitration window would open on May 4, 2005, and close on May 31, 2005. The RLECs state they relied upon the representation of the arbitration window made by Sprint in these letters. According to the RLECs, the issue is whether Sprint can represent that varying dates will apply, but be bound by none of them.

Sprint's Position: The Act clearly states that the arbitration window consists of the period from the 135th to the 160th day (inclusive) after the date on which an

incumbent local exchange carrier receives a request for negotiation. Sprint provides copies of overnight mail receipts for each of the 25 members of the RLEC Group indicating they received Sprint's request for interconnection on October 22, 2004. Sprint filed its petition on March 31, 2005, the 160th day of the window. Sprint acknowledges it erroneously quoted the arbitration window as May 4 through May 31, 2005, in two letters to the RLECs. Sprint states the error was inadvertent, and upon discovery of the error, Sprint contacted counsel for the RLECs to correct this error. Nonetheless, Sprint states the error does not relieve the RLECs of their own responsibility to keep track of the statutory arbitration window.

Board Discussion: The Board will deny the motions to dismiss based on the allegation that Sprint's petition was untimely filed with the Board. In this respect, the Act is clear. The window for requesting arbitration is to be calculated from the date the request for negotiations was received by the incumbent local exchange carrier. The RLECs received the requests on October 22, 2004, and Sprint's petition was therefore filed in a timely manner. Moreover, Sprint's unilateral[3] (and inadvertent) mis-statement of those dates cannot change the statute, at least in the absence of some showing of prejudice to the other parties. Here, the RLEC Group, Heartland, and Iowa Telecom have claimed prejudice, arguing that if the arbitration window had really been in May, they might have negotiated an interconnection agreement with

[3] The Board is aware that the parties to § 252 proceedings often, by agreement, designate a different date for the receipt of the request, and therefore extend the negotiating period beyond 160 days, but there is no provision for either party to do so unilaterally.

Sprint during April, but this argument assumes that the parties were negotiating in the first place. Instead, it appears that little or no negotiation took place between October of 2004 and March of 2005, making it reasonable to believe that there would have been no negotiations in April, either.

The motions to dismiss the petition based upon the date of filing are denied.

ISSUE TWO: Whether the RLECs have a duty to establish interconnection agreements with Sprint.

Iowa Telecom and RLEC Group Position: Sprint represents in its petition that it will be providing facilities-based competitive services, but it is clear that MCC is the local exchange carrier which will be responsible for providing local exchange services to the public. Sprint's role is that of a wholesaler providing contract services for MCC.

A necessary condition for an entity to assert rights under §§ 251(a), (b), and (c) of the Act is that it must be a "telecommunications carrier" pursuant to § 153(44) of the Act. Section 153(44) defines "telecommunications carrier" as "any provider of telecommunications services, except that such term does not include aggregators of telecommunications services (as defined in Section 226)." Section 153(46), in turn, defines "telecommunications service" as "the offering of telecommunications for a fee directly to the public, or to such classes of users as to be effectively available directly to the public, regardless of the facilities used." Because Sprint itself would offer no service to the public and would have no direct relationship with any end-user whose traffic would be exchanged under the proposed interconnection agreements, for the

purposes of this proceeding Sprint is not a telecommunications carrier and does not offer telecommunications service. Thus, the petition should be dismissed.

Even if Sprint were a "telecommunications carrier" under the Act, it would have no right to demand an interconnection agreement pursuant to § 251(b) of the Act, which is reserved only for local exchange and Commercial Mobile Wireless Service (CMRS) providers. Pursuant to § 153(26) a local exchange carrier is an entity "engaged in the provision of telephone exchange service or exchange access." Sprint's Iowa tariff defines its exchange area to include only the exchanges of Qwest Corporation. Authority to provide service in Qwest's exchanges as a CLEC does not give Sprint any right to insist on a local interconnection agreement with RLECs in other exchanges. Because Sprint is not authorized to provide exchange service beyond the exchanges of Qwest, the service Sprint proposes to offer does not qualify as telephone exchange service or exchange access service.

Sprint's Position: The motions to dismiss state that since Sprint is not a CLEC authorized to provide service in any of the exchanges of the RLECs, Sprint has no right to insist on a local interconnection agreement with the RLECs. Sprint argues that its status as a certificated CLEC in the RLEC exchanges is not determinative of interconnection rights under §§ 251(a) and (b) of the Act. Sprint's right to interconnection under § 251 is established by Sprint's status as a "telecommunications carrier" providing "telecommunications services" pursuant to §§ 153(44) and 153(46) of the Act. It is not necessary for Sprint to be a certificated

CLEC in any of the LEC's exchanges in order for it to be entitled to interconnection rights under § 251.

Federal law does not require CLEC certification as a pre-condition for interconnection. Instead, it allows for variations in how telecommunications services may be provided. This flexibility is demonstrated by the different requirements for CLEC certification in various states. For example, Iowa requires Board approval of a retail tariff before granting CLEC status. However, in other states, Sprint has received statewide CLEC status for the purpose of providing interconnection services to cable companies like the arrangement Sprint is proposing with MCC in Iowa. CLEC status is not a blanket requirement for interconnection under § 251 of the Act.

The RLECs allege that only local exchange and CMRS providers are eligible to assert interconnection rights under § 251(b). This is contrary to the FCC's ruling regarding the provision of directory listing information under the Act.[4] In that case, the FCC held that a directory assistance provider's provision of "call completion" service entitles the provider to nondiscriminatory directory assistance database access under § 251(b)(3), regardless of whether the provider is certified by the state as a CLEC.

In addition, even if it were true that only local exchange and CMRS providers are eligible to assert rights under § 251(b), Sprint is a local exchange carrier[5] by

[4] Provision of Directory Listing Information Under the Telecommunications Act of 1934, as Amended, CC-Docket No. 99-273, First Report and Order, 2001 FCC Lexis 473, para. 15-18 (rel. 1-23-01).
[5] Section 153(26) provides that the term "local exchange carrier" means any person that engages in the provision of telephone exchange service or exchange access.

virtue of providing "telephone exchange service" within the meaning of the Act. Sprint's provision of service to MCC will enable MCC customers to originate and terminate local telephone calls. This falls squarely within the definition of telephone exchange service under § 153(47).[6]

Because Sprint is providing "telephone exchange service" pursuant to § 251(b), Sprint is also entitled to local number portability parity pursuant to § 251(b)(2) and dialing parity pursuant to § 251(b)(3). Additionally, pursuant to § 251(b)(5) Sprint is entitled to reciprocal compensation arrangements for transport and termination of telecommunications traffic by nature of its status as a "telecommunications carrier."

Board Discussion: The Board will grant the motions to dismiss based on Sprint's status. The key language in § 153(46), providing that a telecommunications carrier must offer "telecommunications for a fee directly to the public, or to such classes of users as to be effectively available directly to the public," is not as clear as the statutory language relevant to the first issue, above.. However, as the parties have pointed out in their briefs, this statutory definition has been the subject of interpretation by the Federal Communications Commission (FCC) and the courts. These bodies have interpreted the definition to require that a "telecommunications

[6] Section 153(47) provides that the term "local exchange carrier" means A) service within a telephone exchange, or within a connected system of telephone exchanges within the same exchange area operated to furnish to subscribers intercommunicating service of the character ordinarily furnished by a single exchange, and which is covered by the exchange service charge, or (B) comparable service provided through a system of switches, transmission equipment, or other facilities (or combination thereof) by which a subscriber can originate and terminate a telecommunications service.

carrier" can be either a retail or wholesale provider, but it must be a common carrier. Based on those interpretations, Sprint is not a "telecommunications carrier" in these exchanges for purposes of invoking the negotiation and arbitration procedures of § 252 of the Act because it is not, in this context, holding itself out as a common carrier.

The most relevant case is Virgin Islands Telephone v. FCC, 198 F.3d 921 (D.C. Cir. 1999), in which the court reviewed an FCC order granting AT&T Submarine Systems, Inc. (AT&T-SSI), rights to land an undersea cable even though AT&T-SSI was not a common carrier. In reviewing the AT&T-SSI application, the FCC determined that AT&T-SSI was not a "telecommunications carrier" under the Act because it would not function as a common carrier. AT&T-SSI proposed to offer its services to retail telecommunications carriers and relied upon the retail service offerings by its wholesale customers in claiming it was, itself, a telecommunications carrier, much like Sprint is relying on the proposed retail service offerings of MCC to support Sprint's claim to be a telecommunications carrier. The FCC rejected AT&T-SSI's arguments, and the court affirmed.

In its own analysis of the Virgin Islands decision, Sprint points out that the FCC's order in that case observed that the Act's definition of "telecommunications service" includes wholesale services to other carriers. (Sprint brief at page 9.) In other words, the FCC's focus, and therefore the reviewing court's focus, was not on the question of whether AT&T-SSI was a retailer or a wholesale; instead, it was on the question of whether AT&T-SSI was a common carrier or a private carrier. Thus,

the FCC's order and the court's decision "minimize the distinction between 'directly to the public' and 'effectively available directly to the public'...." (Sprint brief at page 8.) The Board agrees that the FCC and the Virgin Islands Court did not adopt a wholesale/retail distinction in interpreting the language of the statute. However, the FCC's interpretation, affirmed by the court, distinguishes between common carriers and private carriers and determined that a "telecommunications carrier" under the Act must be a "common carrier." That term, in turn, is defined by a two-pronged test: First, whether the carrier holds itself out to serve all potential users indifferently and second, whether the carrier allows customers to transmit information of the customer's own design and choosing. United States Telecom Ass'n v. FCC, 295 F.3d 1326, 1329 (D.C. Cir. 2002) (hereinafter USTA), citing National Ass'n of Regulatory Util. Comm'rs v. FCC, 525 F.2d 630, 642 (D.C. Cir. 1976).

In this proceeding, it is clear that Sprint does not intend to offer its proposed service in the RLEC exchanges to any party other than its private business partners, pursuant to individually-negotiated contracts. At no point in this proceeding has Sprint asserted that it will make its proposed services available on a common carrier basis. Thus, Sprint cannot satisfy the first prong of the NARUC 1 test, is not a common carrier (in this respect), and therefore is not a "telecommunications carrier" under § 153(46) as interpreted by the Virgin Islands Court and the FCC.[7]

[7] The test for determining whether a carrier is a "common carrier" is analyzed in some detail in the USTA decision. The key question for purposes of this case appears to be whether in these RLEC exchanges Sprint will hold itself out indiscriminately to serve all within the class of potential customers. USTA, 295 F.3d at 1329-30, citing various FCC decisions. Again, there is nothing in Sprint's petition to demonstrate that it will serve all customers on the same terms and conditions; instead, it appears

The parties refer to a number of other decisions in support of their respective positions, but none of them are as directly relevant to this matter as the decisions summarized above. For example, the RLEC Group refers to the Board's recent order in Re: Level 3 Communications, LLC, Docket No. TF-05-31 (TCU-99-1), for the proposition that the Board distinguishes carriers that offer service to the public from carriers who limit service to business partners. (RLEC Group brief at 8.) However, that order was concerned only with Iowa Code § 476.29, which makes a clear distinction between retail and wholesale services; it is not directly relevant to interpretation of the federal statutes at issue here.

This distinction is also reflected in the Board's decision in Re: Intrado Communications, Inc., Docket No. TCU-02-1, "Order Denying Application For Certificate (Without Prejudice)" (issued March 15, 2002), in which the Board determined that certification pursuant to Iowa Code § 476.29 is not a prerequisite to being considered a telecommunications carrier under the Act. In Intrado, the carrier proposed to offer a wholesale 911 emergency call-related service to any local exchange carrier that wanted it. This was sufficient to qualify the company as a common carrier and therefore a telecommunications carrier under the Act. The fact that the carrier was not eligible for a § 476.29 certificate was irrelevant.

Sprint cites the Board to a decision of the Public Utilities Commission of Ohio, In the Matter of the Application and Petition in Accordance with Section II.A.2.b of the

---

Sprint intends to negotiate separately with each potential customer, to the extent it has customers other than MCC.

Local Service Guidelines Filed by: The Champaign Telephone Company, et al., Case No. 04-1494-TP-UNC *et seq.*, "Finding And Order" (issued January 26, 2005) and the associated "Order On Rehearing" issued April 13, 2005. In that case, which involved an ILEC assertion of rural exemption status under the Act, the Ohio commission concluded that MCI was a "telecommunications carrier" under the Act when it had made arrangements to provide services to Time Warner, which would then make those services available to the public. Sprint argues that it is in the same position in Iowa, as an "intermediate carrier."

The Ohio commission's decision appears to be based solely on the language of the Act, without reference to the FCC and court decisions interpreting the statute. In particular, the decision makes no mention of the D.C. Circuit's Virgin Islands decision and the FCC rulings reviewed therein. Thus, the Ohio decision never addresses the question of whether MCI is proposing to operate as a common carrier. For this reason, the Board finds the Champaign order to be of little help in this proceeding.

Moreover, the Board notes that in the Ohio proceedings, MCI represented to the commission that it would "submit order to Applicants on Time Warner's behalf...." This language implies an agency relationship between MCI and Time Warner that, on this record, does not exist between Sprint and MCC. That is, Sprint does not seek to negotiate and, if necessary, arbitrate an interconnection agreement on MCC's behalf; instead, it seeks an interconnection agreement in its own name, which it will then use

to handle traffic from customers of MCC and, potentially, other telecommunications carriers that do not have their own interconnection agreements with the RLECs.

This is a significant distinction between the Ohio decision and the case before the Board. It appears that if Sprint had sent the RLECs a request for negotiations on behalf of MCC, the RLECs would have been required to participate in the § 252 negotiation and arbitration process. By seeking an agreement in its own name, in contrast, Sprint removed these negotiations from the § 252 process. This decision may have had a legitimate business purpose from Sprint's point of view, but the difference may be more than a technicality to the RLECs; the compensation that may be owed by one party to an interconnection agreement to the other party can depend upon where the calls originated, what type of carrier they originated with, and other factors. If the RLECs have separate interconnection agreements with each telecommunications carrier providing service in their exchanges, they may have a better chance of correctly identifying and classifying the traffic they receive and therefore that the compensation they pay or receive is correct.

It is possible that this issue might have been resolved during negotiation and arbitration, if the parties had chosen to pursue that option. The Board believes the RLECs could have waived their objection to negotiating and arbitrating with Sprint in these circumstances, but the Act did not require them to do so.

The result of the RLECs' refusal to negotiate with Sprint is that MCC's entry as a competitor in the RLEC exchanges will be delayed while Sprint (or MCC) submits a new request and starts the process over. On its face, this result may appear to be

contrary to the public's interest in having a choice of telecommunications service providers as soon as possible. However, it would be even worse if the Board were to deny the motion to dismiss and invest time and resources in arbitrating an interconnection agreement between Sprint and the RLECs, only to be reversed in court because of a lack of jurisdiction under the Act.

Moreover, when the parties start over, they will be able to actually negotiate regarding the appropriate terms and conditions of their interconnection agreements. No such negotiations have taken place to date. The Board believes it will be beneficial if the negotiations process required by § 252(b)(5) is pursued before arbitration begins.

ORDERING CLAUSES

IT IS THEREFORE ORDERED:

1. The "Motion to Dismiss Petition for Arbitration as Not Timely" filed by Heartland Telecommunications Company of Iowa, d/b/a HickoryTech, on April 13, 2005, is denied.

2. The motions to dismiss filed by the RLEC Group and Iowa Telecommunications Services, Inc., d/b/a Iowa Telecom, on April 15, 2005, are granted in part and denied in part. The motions are denied with respect to the assertions that the petitions for arbitration filed in this docket on March 31, 2005, were not timely filed. The motions are granted with respect to the assertions that Sprint Communications Company, L.P., is not a "telecommunications carrier" within

the meaning of § 153(44) of the Act in the RLEC exchanges and therefore does not have the right to invoke the compulsory arbitration process under § 252 of the Act.

3. Docket No. ARB-05-2 is closed.

UTILITIES BOARD

/s/ John R. Norris

/s/ Diane Munns

ATTEST:

/s/ Judi K. Cooper
Executive Secretary

/s/ Elliott Smith

Dated at Des Moines, Iowa, this 26th day of May, 2005.

STATE OF ILLINOIS

ILLINOIS COMMERCE COMMISSION

Cambridge Telephone Company	:	
C-R Telephone Company	:	
El Paso Telephone Company	:	
Geneseo Telephone Company	:	05-0259
Henry County Telephone Company	:	05-0260
Mid Century Telephone Company	:	05-0261
Reynolds Telephone Company	:	05-0262
Metamora Telephone Company	:	05-0263
Harrisonville Telephone Company	:	05-0264
Marseilles Telephone Company	:	05-0265
Viola Home Telephone Company	:	05-0270
	:	05-0275
Petitions for Declaratory Relief and/or	:	05-0277
Suspension or Modification Relating	:	05-0298
to Certain Duties under Sections	:	
251(b) and (c) of the Federal	:	(Cons.)
Telecommunications Act, pursuant to	:	
Section 251(f)(2) of that Act; and for	:	
any other necessary or appropriate	:	
relief.	:	

PROPOSED ORDER

By the Commission:

I. INTRODUCTION

From April 15, 2005 through May 4, 2005, Cambridge Telephone Company, C-R Telephone Company, El Paso Telephone Company, Geneseo Telephone Company, Henry County Telephone Company, Mid Century Telephone Company, Reynolds Telephone Company, Metamora Telephone Company, Harrisonville Telephone Company, Marseilles Telephone Company, and Viola Home Telephone Company (collectively "Petitioners") each filed with the Illinois Commerce Commission ("Commission") a verified petition requesting extensive relief from certain obligations under the federal Telecommunications Act ("Federal Act"), 47 U.S.C. 151 et seq. Because the petitions are nearly identical, the dockets have been consolidated.

As an initial matter, Petitioners asks the Commission to promptly enter an interim order without hearing staying any obligation they have to negotiate reciprocal compensation or interconnection with Sprint Communications, L.P. d/b/a Sprint Communications Company L.P. ("Sprint") and staying any arbitration proceeding which may arise from Petitioners and Sprint's inability to agree on certain interconnection

Attachment C

matters until this proceeding has concluded. Thereafter, Petitioners seek a declaratory ruling by the Commission, pursuant to 83 Ill. Adm. Code 200.220, finding that they have no duty under Section 251(b)(2) and (5) of the Federal Act to negotiate reciprocal compensation or local number portability and no duty under Section 251(c) of the Federal Act to negotiate interconnection with an indirect transiting carrier or any carrier that does not intend to provide local exchange telecommunications service in their respective local serving areas. In response to an April 21, 2005 legal inquiry by the Administrative Law Judge ("ALJ"), Petitioners clarify the relief they seek by stating that if the Commission does not issue the initial declaratory ruling sought by Petitioners, the Commission should issue a declaratory ruling concluding that Petitioners are exempt from negotiating any terms of interconnection or reciprocal compensation by virtue of its rural exemption under Section 251(f)(1) of the Federal Act.

If the Commission does not enter either of the declaratory rulings sought by Petitioners, they seek an order, pursuant to Section 251(f)(2) of the Federal Act, suspending or modifying their obligation to negotiate reciprocal compensation or local number portability under Section 251(b)(2) and (5) with an indirect transiting carrier that does not intend to provide local exchange telecommunications service in their respective local serving areas and has no ability to unambiguously identify the traffic it would terminate as "local" to Petitioners. Also pursuant to Section 251(f)(2) of the Federal Act, Petitioners seek a suspension or modification of their obligation to negotiate interconnection under Section 251(c) with a carrier seeking to force them to establish and support a point of interconnection outside of their respective local serving areas. In the event that they are not able to obtain the desired suspensions or modifications under Section 251(f)(2), Petitioners ask that the Commission identify the terms and conditions, including timeframes, under which they may have a duty to negotiate with Sprint.

Only Sprint filed a petition to intervene, which was granted by the ALJ. Commission Staff ("Staff") participated as well. The aforementioned April 21, 2005 inquiry from the ALJ also specified the date by which Staff and any intervener should respond to the declaratory ruling request. A deadline was also established by which Petitioners should reply to any response from Staff and any intervener. Sprint offered a response to the ALJ's April 21, 2005 inquiry as well as a response to the merits of Petitioners' declaratory ruling requests. Staff, however, only responded to the ALJ's inquiry and specifically declined to offer any opinion on the substance or merits of the petitions. Petitioners each filed a reply to the responses of Staff and Sprint.

Although Petitioners seek an interim order staying any obligation to negotiate with Sprint, the Commission believes that it can sufficiently address the issues raised by Petitioners in a timely manner with a single order. In accordance with Section 200.220(h) of the Commission's rules, the Commission disposes of the requests for the declaratory rulings on the basis of the written submissions before it.

II. BACKGROUND

Petitioners are small facilities-based incumbent local exchange carriers ("LEC") providing local exchange services, as defined in Section 13-204 of the Public Utilities Act ("Act"), 220 ILCS 5/1-101 et seq., subject to the jurisdiction of the Commission. Cambridge Telephone Company provides service in the Cambridge and Osco exchanges. C-R Telephone Company serves the Cornell and Ransom exchanges. El Paso Telephone Company serves only the El Paso exchange. Geneseo Telephone Company provides service in the Geneseo and Green River exchanges. Henry County Telephone Company serves the Atkinson and Annawan exchanges. Mid Century Telephone Company serves the Ellisville, Altona, Williamsfield, Table Grove, Summum, Fairview, Smithfield, Maquon, Gilson, Victoria, Marietta, Bishop Hill, and Lafayette exchanges. Reynolds Telephone Company serves only the Reynolds exchange. Metamora Telephone Company provides service in the Metamora and Germantown Hills exchanges. Harrisonville Telephone Company serves the Columbia, Dupo Prairie Du Rocher, Red Bud, Renault, Valmeyer, and Waterloo exchanges. Marseilles Telephone Company serves only the Marseilles exchange while Viola Home Telephone Company serves only the Viola exchange. Petitioners each provide service to less than 2% of subscriber lines nationwide. Petitioners are each a "rural telephone company" within the meaning of Section 153(37) of the Federal Act and Section 51.5 of the rules of the Federal Communications Commission ("FCC"). As rural telephone companies, Petitioners each possess a rural exemption under Section 251(f)(1)(A) of the Federal Act from the requirements of Section 251(c) of the Federal Act.

Sprint is an interexchange telecommunications carrier authorized to provide interexchange services throughout Illinois. Sprint is authorized by the Commission to provide resold and facilities-based local exchange telecommunications services as well in those portions of Illinois served by Illinois Bell Telephone Company and Verizon North, Inc. and Verizon South, Inc. According to Sprint's petition to intervene, such local authority was granted in Docket Nos. 96-0141 and 96-0598, respectively. Pursuant to the Order entered in Docket No. 96-0261, Sprint states that it is also authorized to provide resold local exchange services in those portions of MSA-1 served by Central Telephone Company of Illinois ("Centel"). Sprint relates that it received authority to provide local exchange service in those portions of Illinois outside of MSA-1 served by Centel in Docket No. 97-0295. Sprint reports that the Centel exchanges have subsequently been sold to Illinois Bell Telephone Company and Gallatin River Communications L.L.C. Sprint currently is not authorized to provide local exchange services within any of the Petitioners' serving areas. On May 6, 2005, however, Sprint filed an application requesting authority to provide resold and facilities-based local and interexchange services throughout Illinois. Sprint's application is identified as Docket No. 05-0301.

As indicated above, Petitioners have initiated these proceedings to resolve certain disputes with Sprint. On September 7, 2004, Sprint sent a letter to each Petitioner seeking to begin negotiations for an interconnection agreement pursuant to Sections 251 and 252 of the Federal Act. Over the next few months, Petitioners and

Sprint exchanged correspondence intended to focus and clarify the interconnection request. Sprint does not seek to interconnect with Petitioners pursuant to Section 251(c) of the Federal Act. Rather, Sprint wishes to interconnect and exchange traffic pursuant to subsections (a) and (b) of Section 251.

Same case as one.

According to Sprint, it seeks interconnection with Petitioners to offer competitive alternatives in telecommunications services to consumers in rural Illinois through a business model in which Sprint provides telecommunications services to other competitive service providers seeking to offer local voice service. With regard to Illinois, Sprint has entered into a business arrangement with MCC Telephony of Illinois, Inc. ("MCC") to support its offering of local and long distance voice services.[1] Sprint states that the relationship enables MCC to enter the local and long distance voice market without having to "build" a complete telephone company. In effect, MCC has outsourced much of the network functionality, operations, and back-office systems to Sprint. Sprint relates that it has relationships utilizing this same market entry model with Wide Open West, Time Warner Cable, Wave Broadband, Blue Ridge Communications, and others not publicly announced serving almost 300,000 customers across over a dozen states including Illinois.

Under the arrangement between MCC and Sprint, MCC is responsible for marketing and sales, end-user billing, customer service, and the "last mile" portion of the network which includes the MCC hybrid fiber coax facilities, the same facilities it uses to provide video and broadband Internet access. Service is provided in MCC's name. Sprint provides the public switched telephone network ("PSTN") interconnection utilizing Sprint's switch (MCC does not own or provide its own switching), competitive LEC status, and the interconnection agreements it has or is negotiating with incumbent LECs. Sprint also uses existing numbers or acquires new numbers, provides all number administration functions including filing of number utilization reports with the North American Numbering Plan Administrator, and performs the porting function whether the port is from the incumbent LEC or a competitive LEC to Sprint or vice versa. Sprint is also responsible for all inter-carrier compensation, including exchange access and reciprocal compensation. Sprint provisions 9-1-1 circuits to the appropriate Public Safety Answering Points ("PSAP") through the incumbent LEC selective routers, performs 9-1-1 database administration, and negotiates contracts with PSAPs where necessary. Finally, Sprint places MCC directory listings in the incumbent LEC or third party directories.

In light of the relationship between Sprint and MCC, specifically the services provided by Sprint to MCC, Petitioners contend that it has no obligation to negotiate reciprocal compensation, local number portability, or interconnection with Sprint.

---

[1] On December 15, 2004, the Commission entered an Order in Docket No. 04-0601 authorizing MCC to provide resold and facilities-based local and interexchange telecommunications services throughout Illinois. MCC is an affiliate of Mediacom Communications Corporation, a cable television provider within parts of Petitioner's serving area.

Petitioners maintain this position regardless of its rural carrier exemption under Section 251(f)(1)(A).

III. SECTION 251(f)(1)(A) THRESHOLD INQUIRY

Despite Petitioners' insistence to the contrary, a threshold inquiry involving Section 251(f) exists that could resolve this matter, at least in part. As previously noted, Section 251(f)(1)(A) exempts Petitioners, as rural telephone companies, from the obligations imposed in Section 251(c).[2] Nevertheless, Petitioners seek a declaratory ruling that it need not negotiate interconnection as required by Section 251(c), or, in the alternative, a suspension under Section 251(f)(2) of the obligation to negotiate interconnection as required by Section 251(c). Although Petitioners seek the relief regarding Section 251(c) independent of the Section 251(f)(1)(A) exemption, the Commission is not inclined to expend limited resources answering questions that are moot. Because Petitioners possess an exemption from Section 251(c), the type of arrangement Sprint has with MCC and the services provided by Sprint to MCC are irrelevant as they relate to Section 251(c). Accordingly, the Commission declines to issue a declaratory ruling regarding the obligations established by Section 251(c), which is within its discretion to do under Section 200.220(a). Nor will the Commission consider a suspension of the Section 251(c) obligations under Section 251(f)(2) given the exemption Petitioners already possess. In any event, the Commission notes Sprint's claim that it is not seeking interconnection under Section 251(c).

The next step in the inquiry is to determine whether Petitioners' exemption from Section 251(c) also covers their obligations under Section 251(b). Section 251(c)(1) obligates all incumbent LECs to negotiate in good faith terms and conditions of agreements fulfilling the obligations established for all LECs (both incumbent and competitive) in Section 251(b). Petitioners argue that their duty to negotiate the obligations of Section 251(b) arise from Section 251(c). If Section 251(c) does not apply to them, Petitioners conclude that Section 251(b) can not either. Staff, however, contends that Petitioners overstate the reach of their exemption from Section 251(c). Section 251(b), according to Staff, establishes obligations of all LECs independent from any exemption of Section 251(c) for rural incumbent LECs. Because it seeks to interconnect under Section 251(a) and (b), Sprint maintains that Section 251(f)(1) provides no exemption for Petitioners. Consistent with the FCC's treatment of this issue, the Commission finds that an exemption from Section 251(c) does not encompass the obligations imposed in Section 251(b). Section 251(f)(1)(A) provides relief only from the requirements of Section 251(c).

In light of the limited scope of Section 251(f)(1)(A), Petitioners' declaratory ruling request regarding Section 251(b)(2) and (5) remains for the Commission's consideration. Whether Petitioners have any duty under Section 251(a) and (b) to provide number portability and establish reciprocal compensation arrangements for the

[2] The Commission also notes that it has not received a bona fide request seeking to lift any of the Petitioners' exemption pursuant to Section 251(f)(1)(B).

transport and termination of telecommunications under the circumstances described above is the focus of the remainder of this Order.

IV. PETITIONERS' DUTY TO NEGOTIATE[3]

A. Petitioners' Position

While Petitioners do not deny that Sprint is a telecommunications carrier that provides telecommunications services in various areas of Illinois, Petitioners do not believe that this fact means that Sprint is a telecommunications carrier for all purposes. Petitioners note Sprint's acknowledgement of the fact that the focus of both the state and federal definitions of telecommunications services is primarily upon the services being provided rather than the provider of those services. Petitioners point out that Section 51.703(a) of the FCC's rules provides that LECs must "establish reciprocal compensation arrangements for transport and termination of telecommunications traffic with any requesting *telecommunications carrier*." (emphasis added) Section 153(44) of the Federal Act defines "telecommunications carrier" as:

> any provider of telecommunications services, except that such term does not include aggregators of telecommunications services (as defined in section 226). A telecommunications carrier shall be treated as a common carrier under [the Federal Act] only to the extent that it is engaged in providing telecommunications services, except that the [FCC] shall determine whether the provision of fixed and mobile satellite service shall be treated as common carriage.

Section 153(46) of the Federal Act defines "telecommunications service" as "the offering of telecommunications for a fee directly to the public, or to such classes of users as to be effectively available directly to the public, regardless of the facilities used."

Petitioners apply the Federal Act's definitions to the service that Sprint intends to provide MCC and conclude that Sprint is not acting as a telecommunications carrier. Specifically, Petitioners state that Sprint clearly will not be providing the services over which it seeks negotiation "directly" to the public. Nor, Petitioners continue, can it be said that Sprint will be providing services "to such classes of users as to be effectively available directly to the public" when it provides services to MCC which will then provide services to the public. Petitioners acknowledge that the Public Utilities Commission of Ohio ("PUCO") recently issued a decision rejecting the arguments Petitioners now make. In the PUCO docket,[4] similarly situated small rural incumbent LECs sought exemptions under Section 251(f)(1) and (2) of the Federal Act when confronted with an arrangement between MCImetro Access Transmission Services, LCC, Intermedia

---

[3] As noted above, when given the opportunity, Staff declined to address the merits of Petitioners' declaratory ruling request.

[4] *In the Matter of the Application and Petition in Accordance With Section II.A.2.b. of the Local Guidelines Filed by: The Champaign Telephone Company* et al. 04-1494-TP-UNC et seq., Finding and Order, January 26, 2005; Order on Rehearing, April 13, 2005.

Communications, Inc., and Time Warner Cable Information Services (Ohio), LLC similar to the arrangement between Sprint and MCC. Petitioners contend that the PUCO is simply wrong.

In support of its view of the PUCO decision, Petitioners state that both the FCC and United States Court of Appeals for the District of Columbia Circuit have rejected the argument that a service can be interpreted as effectively available directly to the public by looking to how a private carriers' telecommunications carrier customers use that service. According to Petitioners, in *Virgin Islands Telephone Corp. v. FCC*, 198 F.3d 921 (1999), the D.C. Circuit affirmed the FCC's conclusion that the term "telecommunications carrier" under the Federal Act incorporates the preexisting definition of "common carrier" established by the earlier case of *National Association of Regulatory Commissioners v. FCC* ("*NARUC*"), 525 F.2d 630 (D.C. Cir. 1976). (*See Virgin Islands Telephone Corp.*, 198 F.3d at 925-26)

Under the *NARUC* test, Petitioners state that "common carrier" status turns on whether the carrier "undertakes to carry for all people indifferently." (*Id.* at 926 (citing *NARUC*, 525 F.2d at 642)) In *Virgin Islands Telephone*, the court reviewed an FCC finding that an AT&T affiliate called AT&T-SSI was not acting as a common carrier by making capacity on its submarine cables available to other telecommunications providers that would, in turn, make that capacity available through services provided to end-user customers. The FCC had concluded that a service will not be considered "available to the public" or "effectively available to a substantial portion of the public" if it is "provided only for internal use or only to a specified class of eligible users under the Commission's rules." The FCC also stated that "whether a service is effectively available directly to the public depends on the type, nature, and scope of users for whom the service is intended and whether it is available to 'a significantly restricted class of users." (*Virgin Islands Telephone*, 198 F.3d at 924) The FCC rejected the argument that AT&T-SSI would be making a service effectively available directly to the public because AT&T-SSI's *customers* would use the capacity to provide a service to the public, noting that "[s]uch an interpretation is contrary to the plain language of the [Federal Act] by focusing on the service offerings AT&T-SSI's customers may make rather than on what AT&T-SSI will offer." (*Id.*)

In reaffirming the *NARUC* test, Petitioners note that the FCC specifically rejected the inclusion of a "carrier's carrier" in the definition of telecommunications carrier and specifically rejected the suggestion that the Federal Act "introduce[d] a new concept whereby we must look to the customers' customers to determine the status of a carrier." (*Id.* at 926) According to the court, Petitioners continue, the key to common carrier status is "the characteristic of holding oneself out to serve indiscriminately." (*Id.* at 927) (quoting *NARUC*, 525 F.2d at 642) Petitioners state that the court approved the FCC's decision to contrast such common carrier/telecommunications carrier behavior to "private carrier" activity under which a carrier makes individualized decisions about whether and on what terms to serve done under contract between carriers. (*Virgin Islands Telephone Corp.*, 198 F.3d at 925)

Under this analysis, Petitioners argue that Sprint is clearly acting as a private carrier in its dealings with MCC. Petitioners add that it makes no difference whether Sprint is acting as a transiting carrier or a private switching and back office service provider. So long as Sprint is not providing service to end-users or making its service available indiscriminately to all takers, Petitioners aver that Sprint is providing private carrier or vendor services to MCC and is not providing service to the public. As a private carrier, Petitioners maintain that Sprint is not a telecommunications carrier and is not seeking to negotiate for the provision of telecommunications service in Petitioners' respective serving areas.

Petitioners also argue that Sprint's definition of telecommunications carrier does not comply with common sense. For example, even though Sprint seeks to negotiate reciprocal compensation, Petitioners assert that Sprint will originate no traffic on which reciprocal compensation will be owed and will terminate no traffic on which it will be owing. Any such traffic, Petitioners continue, would be MCC's and MCC should be primarily responsible. Similarly, while Sprint seeks an agreement on local number portability, the entity to which such numbers would be ported to and portable from would be MCC. Petitioners contend that MCC should be responsible for such obligations directly to it. The same is true, Petitioners add, with dialing parity. In all cases, Petitioners argue, the contractual rights that Sprint is seeking would be properly negotiated by MCC and the contractual obligations for which they will be negotiating should be obligations on MCC for which they should have rights enforceable against MCC. Petitioners aver that the overall design of subsections (b) and (c) of Section 251 is to establish contractual privity between the parties that have the reciprocal rights and obligations. Petitioners do not believe that it makes any sense to interpose a back office service provider into the middle of that relationship. If MCC intends to provide telecommunications services, Petitioners maintain that MCC should be the one seeking negotiations.

All good points.

Moreover, if taken to its extreme, Petitioners claim that Sprint's position would mean that every vendor whose services are incorporated into a telecommunications service is a "telecommunications carrier." This could not only allow every vendor in the industry to demand negotiations, Petitioners point out, it would also impose a number of regulatory burdens on vendors that have no ability to meet those burdens. Nor, according to Petitioners, does it make sense that a carrier that is certificated to provide telecommunications services somewhere (or even actually provides telecommunications services somewhere) is therefore entitled to negotiate agreements everywhere. In order for Section 251 to make practical sense, Petitioners contend that it must be limited to negotiations with carriers that have some plan to be a telecommunications carrier and provide telecommunications services within the serving area of the LEC with which they seek to negotiate. Petitioners insist that Sprint simply does not meet those threshold conditions, whether measured under the terms of the Federal Act as interpreted by the FCC and federal courts or measured by a simple common sense reading of the obligations of the Federal Act.

Because Sprint will not be acting as a telecommunications carrier providing telecommunications services within the meaning of the Federal Act, Petitioners maintain that Sprint is the wrong entity to be negotiating the reciprocal compensation and local number portability arrangement that Sprint is seeking. Petitioners characterize Sprint's claim to be a telecommunications carrier and its reliance on MCC's intent to provide broadband voice information services in competition with Petitioners as a shell game. They state that the only role Sprint truly proposes to play under the agreement it proposes to negotiate with them is as private vendor to MCC.

So that their position is clear, Petitioners expressly state that they have no objection to the "business arrangement" that they understand to exist between Sprint and MCC. If MCC, whether directly or through its affiliates, intends to provide telecommunications services and be a telecommunications carrier in Illinois and in their respective serving areas, Petitioners asserts that this entire issue would be avoided if, as the Federal Act contemplates, MCC initiated the negotiation process with them. Petitioners contend that the absence of the purported local service provider overshadows what services Sprint may or may not provide. In their opinion, there is no apparent legitimate reason not to impose on the purported service provider the obligation to initiate and conduct negotiations and be a party to the resulting agreement, no matter whether it intends to self-provision or rely on third parties such as Sprint.

B. Sprint's Position

Sprint maintains that Petitioners are obligated by the Federal Act to interconnect with it and provide number portability and establish reciprocal compensation arrangements despite the fact that MCC is the entity directly serving the end-user. Sprint relates that it has entered into agreements with telecommunications service providers that intend to compete with the Petitioners' local voice services. These agreements require Sprint to provide certain services, including but not limited to number acquisition and administration, telephone number assignment, including local routing numbers, port requests, switching, and transport of local calls, and exchange access to and from the PSTN, including calls to 9-1-1 for end-users.

Like Petitioners, Sprint too relies on the definition of "telecommunications service" in Section 153(46) of the Federal Act to support its position. Sprint emphasizes the latter part of the definition ("..., or to such class of users as to be effectively available directly to the public, ...") and notes the PUCO's recent decision relying on this portion of the definition.[5] As discussed above, the PUCO rejected arguments similar to those raised by Petitioners in a case involving services similar to those which Sprint intends to provide to MCC. The PUCO specifically found that MCI was a telecommunications carrier and that the rural incumbent LECs had a duty to interconnect with MCI. The PUCO also concluded that MCI was acting in a role no different than other telecommunications carriers whose network could interconnect with the rural incumbent LECs so that traffic is terminated to and from each network and across networks. Like MCI, Sprint contends that its proposed interconnection with

[5] See Footnote No. 4.

Petitioners places it in the same position as other intermediate carriers whose interconnections terminate traffic to and from each network and across networks. Because its services will be effectively available to the public (through MCC), Sprint maintains that it is a telecommunications carrier offering telecommunications services.

Because it is telecommunications carrier, Sprint argues further that Section 251(a) of the Federal Act establishes an independent basis for interconnection. Section 251(a) requires each telecommunications carrier to interconnect directly or indirectly with the facilities and equipment of other telecommunications carriers. Sprint reports that neither subsection (f)(1) nor (f)(2) of Section 251 provide Petitioners with an exemption from their obligation to allow for direct or indirect interconnection. Moreover, Sprint points out that it has not requested interconnection pursuant to Section 251(c). In this regard, Sprint is a facilities-based carrier that does not require access to Section 251(c) provisions such as unbundled network elements, collocation, and resale. Sprint states that it is much like a wireless carrier in that it owns all of its own facilities and, therefore, does not need to take advantage of the rights granted to telecommunications carriers under Section 251(c) to use an incumbent LEC's network to compete against the incumbent LEC.

Sprint adds that Section 251(a) does not specifically mention the types of traffic to be exchanged nor does it exclude certain types of traffic. In this regard, Sprint states that Congress has provided definitions of not only "telephone exchange service," but also "telephone toll service."[6] Congress, Sprint continues, could easily have excluded any one of these services or limited Section 251(a)'s applicability to any one of these services, but it did not. Sprint contends that Petitioners may not, therefore, impose a restriction on Sprint that is not contained in the statute. To allow Petitioners to do so, Sprint argues, would undermine one of the enduring tenants of statutory construction – that is – to give effect, if possible, to every clause and word of a statute. Accordingly, Sprint concludes that Petitioners must interconnect either directly or indirectly with it for the exchange of local traffic pursuant to Section 251(a).

Not only does the plain language of Section 251(a) require Petitioners to interconnect with Sprint independent of Section 251(c), Sprint observes that it appears the Commission has approved an agreement between Geneseo Telephone Company and a wireless carrier, Nextel Partners, that contains terms for both direct and indirect interconnection and reciprocal compensation without reference to Section 251(a) of the Federal Act.[7] Of particular interest to Sprint is the part of the agreement that requires the originating party to pay any transiting charges when the parties exchange traffic on an indirect basis.[8] Sprint states that this is exactly the type of arrangement Sprint seeks to enter with Petitioners. Sprint is adamant that Petitioners should not be permitted to

[6] 47 U.S.C. §§ 153(47) and 153(48).
[7] *See* Order entered on April 21, 2004 and Amendatory Order entered on May 26, 2004 in Docket No. 04-0120; *NPCR, Inc. d/b/a Nextel Partners, as agent for Nextel WIP License. Corp. and Nextel WIP Extension Corp. and Geneseo Telephone Company; Joint Petition for Approval of Interconnection Agreement between Geneseo Telephone Company and NPCR, Inc. pursuant to 47 U.S.C. § 252.*
[8] See *Id* at Section 4.5.

discriminate against it. Indeed, Sprint insists, any such discrimination would be antithetical to the FCC's policy pronouncement that "all telecommunications carriers that compete with each other should be treated alike regardless of the technology used..."[9] Both it and Nextel Partners, Sprint points out, are telecommunications carriers that are obligated to comply with and are entitled to all the rights and privileges that result from Section 251(a).

C. Commission Conclusion

Sprint and MCC's interest in competing in certain of the more rural exchanges in Illinois is significant in that it represents one of the first, if not the first, competitive landline ventures into the relevant exchanges. Unfortunately for Sprint, however, *Virgin Islands Telephone* compels the Commission to conclude that Sprint is not providing a telecommunications service, as that term is defined in Section 153(46) of the Federal Act. As noted by Petitioners, the D.C. Circuit Court concluded that making telecommunications "effectively available directly to the public" so as to constitute a telecommunications service can not be done through a third party that is the entity actually/directly serving the public. Because, in this situation, Sprint is not serving the public directly and instead is providing its services to MCC, which is the entity directly serving the public (albeit through the services procured from Sprint), the Commission finds itself bound by the *Virgin Islands Telephone* decision and concludes that Sprint is not providing a telecommunications service. Since Sprint is not providing a telecommunications service under the *Virgin Islands Telephone* decision, Sprint is not a telecommunications carrier with which Petitioners must negotiate local number portability and reciprocal compensation under subsections (a) and (b) of Section 251 of the Federal Act.

The Commission recognizes that its decision is contrary to that of the PUCO cited above. The Commission can not explain the PUCO's decision. The Commission notes, however, that neither the PUCO's January 26, 2005 Finding and Order nor its April 13, 2005 Order on Rehearing cite or discuss the *Virgin Islands Telephone* decision.

In coming to this conclusion, the Commission in no way wishes to discourage those who would like to offer competitive local exchange services to Illinois' more rural telephone customers. Nor should this statement or any other aspect of this Order, however, be construed as an indication as to how the Commission would rule on a future request for a suspension or modification pursuant to Section 251(f)(2) of the Federal Act. The Commission continues to urge all Illinois telecommunications carriers to cooperate in providing competitive telecommunications services to consumers.

---

[9] *Implementation of the Local Competition Provisions of the Telecommunications Act of 1996*, CC Docket Nos. 96-98, 95-185, First Report and Order, 11 FCC Rcd 15499, ¶ 993 (1996) (*Local Competition Order*) (subsequent history omitted).

V. FINDINGS AND ORDERING PARAGRAPHS

The Commission, having considered the entire record herein, is of the opinion and finds that:

(1) Petitioners provide local exchange telecommunications services as defined in Section 13-204 of the Act;

(2) the Commission has jurisdiction over the parties hereto and the subject matter hereof;

(3) the facts recited and conclusions reached in the prefatory portion of this Order are supported by the record and are hereby adopted as findings of fact and law;

(4) as rural telephone companies, Petitioners possess a rural exemption under Section 251(f)(1)(A) of the Federal Act from the requirements of Section 251(c) of the Federal Act;

(5) in light of Petitioners' exemption from the requirements of Section 251(c) of the Federal Act, the Commission need not rule on Petitioners' requests regarding its obligations under Section 251(c);

(6) given the manner in which Sprint proposes to serve MCC, Sprint is not a telecommunications carrier in this instance with which Petitioners must negotiate under subsections (a) and (b) of Section 251 of the Federal Act;

(7) in light of resolution of the issues, no ruling regarding Petitioners' requests under Section 251(f)(2) of the Federal Act is necessary; and

(8) all motions, petitions, objections, and other matters in this proceeding which remain unresolved should be disposed of consistent with the conclusions herein.

IT IS THEREFORE ORDERED by the Illinois Commerce Commission that because Sprint Communications, L.P. d/b/a Sprint Communications Company L.P. is not a "telecommunications carrier" in the context of its relationship with MCC Telephony of Illinois, Inc., Petitioners have no obligation to negotiate with Sprint Communications, L.P. d/b/a Sprint Communications Company L.P., or any similarly situated entity, under subsections (a) and (b) of Section 251 of the federal Telecommunications Act.

IT IS FURTHER ORDERED that all motions, petitions, objections, and other matters is this proceeding which remain unresolved are disposed of consistent with the conclusions herein.

IT IS FURTHER ORDERED that subject to the provisions of 83 Ill. Adm. Code 200.880, this Order is final; it is not subject to the Administrative Review Law.

DATED: May 13, 2005

Briefs on Exceptions must be received by May 19, 2005.
Briefs in Reply to Exceptions must be received by May 25, 2005.

Administrative Law Judge

RECEIVED
JUL 25 2005
NEBRASKA PUBLIC SERVICE COMMISSION

BEFORE THE NEBRASKA PUBLIC SERVICE COMMISSION

IN RE:	)	
SPRINT COMMUNICATIONS	)	
COMPANY L.P. PETITION FOR	)	**APPLICATION NO. C-3429**
ARBITRATION UNDER THE	)	
TELECOMMUNICATIONS ACT	)	

PRE-FILED DIRECT TESTIMONY OF ELIZABETH A. SICKEL

Q: Please state your name and business address for the record.

A: My name is Elizabeth A. Sickel. My business address is 110 West 17th Street, Falls City, Nebraska 68355.

Q: By whom are you employed, what is your position and what are your duties in such position?

A: I am employed by Southeast Nebraska Telephone Company, Inc. ("SENTCO" or the "Company"). I am Vice President and General Manager of the Company. I am in charge of the overall operations and day-to-day management of SENTCO and report directly to the President of the Company. I have been employed by SENTCO for the past four years. Prior to that, I was employed by a Certified Public Accounting firm and, as part of my responsibilities at the firm, I worked on the SENTCO account. Accordingly, I have been aware of the Company's operations for the last ten (10) years. I hold a Bachelor of Science degree in accounting from Peru State College in Peru, Nebraska, and am a licensed Certified Public Accountant. In the four years I have been employed at SENTCO, I have had numerous occasions to address both operational and contractual matters affecting the Company. Accordingly, I believe that I have a general understanding of the matters that must be addressed by SENTCO both with respect to regulatory issues and real world business issues confronting a small rural telephone company.

Exhibit
3
8-15-05

Q: On whose behalf are you testifying?

A: SENTCO.

Q: Have you previously testified before this Commission?

A: No.

Q: Please describe SENTCO's service area.

A: SENTCO is a small incumbent telephone company operating approximately 4,000 access lines in a predominately rural area of southeast Nebraska. Our service area is about 80 air miles from Lincoln, Nebraska. We serve two exchanges – the Falls City Exchange and the Tri City Exchange. Our Falls City Exchange serves the town it is named after, Falls City. Falls City has a population of approximately 4,000 people, and we operate approximately 3,000 access lines in the incorporated area of the town of Falls City. Our second exchange, which we refer to as the Tri City Exchange, is primarily comprised of three small communities – Shubert, Stella and Verdon. This Exchange has approximately 600 access lines. The remaining approximately 400 access lines are located in rural portions of our Falls City Exchange. Our entire certificated area is approximately 382 square miles. I also note that Time Warner Cable ("TWC") only operates within the town of Falls City. Other than typical light industry and/or commercial businesses, the primary economic base of the area served by the Falls City and the Tri City Exchanges is agricultural.

Q: Are you generally familiar with the network arrangements that are in place today between SENTCO and other telecommunications carriers?

A: Yes, I have a general working familiarity with the network we have in place. However, I do not have formal training or extensive experience relating to the technical aspects of our Company. Therefore, I rely on our in-house technicians and outside consultants and

consulting engineers for their insights and opinions whenever I need to address the business and financial issues associated with network deployment.

Q: Please generally describe those arrangements.

A: The SENTCO switch is a Nortel DMS 10, located in Falls City. Tri City is a remote end office off the Falls City switch. We have extended area service (EAS) between our Falls City exchange and Tri City exchange. We do not have any EAS arrangements with any other telephone company. Rather, we connect with ALLTEL Nebraska, Inc. ("ALLTEL"), the primary incumbent telephone company operating in the "South 402" LATA. Our Falls City end office switch is connected with ALLTEL via facilities that SENTCO owns up to a meet point with ALLTEL's facilities. The meet point with ALLTEL is located at our exchange boundary with ALLTEL. These meet point facilities in turn connect our end office switch to the ALLTEL tandem located in Lincoln. As a result of this arrangement, anyone using our services within the SENTCO certificated area that calls someone served by some other telephone company is required to make a long distance call and toll charges apply. SENTCO provides equal access to all interexchange service providers.

Q: How does SENTCO offer its telecommunications services?

A: We offer our services through tariffs filed either with the Nebraska Public Service Commission ("Commission") or the Federal Communications Commission ("FCC"). We have two tariffs on file at the Commission. The SENTCO local exchange tariff contains the rates, terms and conditions under which we provide our general local exchange service offerings. The second tariff filed with the Commission that applies to the Company was actually filed by the Nebraska Independent Telephone Association

("NITA"). The NITA tariff contains the terms and conditions that govern our provision of exchange access services that toll providers within the State of Nebraska use in connection with their respective offerings of long distance service. Although this tariff was filed by NITA, SENTCO is identified in such tariff as an issuing carrier, and the NITA tariff has a company-specific section that identifies our intrastate access rates. In addition, SENTCO is also an issuing carrier in a similar interstate exchange access tariff filed by the National Exchange Carrier Association, Inc.

Q: Are you familiar with the terms of the Interconnection Agreement ("ICA") that is at issue in this proceeding?

A: Yes I am.

Q: What issues remain to be addressed in this arbitration?

A: From my perspective, the only issue that remains is whether Sprint Communications Company L.P. ("Sprint") can utilize the ICA to provide its "enabler" services to a third party carrier or carriers in order to enable such carrier(s) to exchange traffic between its end users and those that SENTCO serves, as contrasted to such carrier negotiating the terms and conditions of an ICA directly with SENTCO. Based on our participation in the certification cases of both Sprint and TWC before the Commission, and the information that Sprint has provided in response to discovery requests we have issued in this case, it appears that the only third party that Sprint seeks to "enable" in the SENTCO service area is TWC.

Q: Setting aside the issue that you have identified as the subject of this arbitration, have Sprint and SENTCO resolved through negotiations all other terms and conditions of the ICA required for Sprint to provide competitive local exchange carrier services to its own retail end users in SENTCO's service area?

A: Yes that is certainly my understanding.

Q: Would you agree that the only question before the Commission in this arbitration is whether the terms and conditions of the ICA can be utilized for the benefit of a third party carrier that is not a party to such ICA?

A: Yes.

Q: If and when a third party carrier such as TWC requests negotiation of an interconnection agreement with SENTCO, will SENTCO engage in good faith negotiations with such requesting party?

A: Yes, assuming there is no issue raised by the request that would require SENTCO to seek Commission intervention such as if the request implicates rights SENTCO has under the 1996 Telecommunications Act. As an aside, I note that these specific types of issues were not raised by Sprint's request for negotiations. Based on our actions in proceeding with negotiations with Sprint, I think it is clear that SENTCO has demonstrated its willingness to engage in the type of discussions and negotiations regarding specific terms and conditions required for an ICA. At the same time, however, we clearly established, and Sprint acknowledged, that SENTCO is not interested in negotiating terms and conditions applicable to the third party business arrangements that Sprint has established with TWC. Rather, we took the position and continue to take the position that TWC should come to the table and request direct negotiations with SENTCO. That way, SENTCO will be able to identify the issues that we must take into account in any interconnection agreement with TWC to ensure that the business terms and conditions we believe to be required to protect SENTCO's interests are either agreed to or arbitrated by the Commission for inclusion in the interconnection agreement. That result, in turn, can only be ensured based on specific discussions with the entity with which we will be competing for end users.

Q: Are you familiar with the Petition for Arbitration filed by Sprint in this matter?

A: Yes.

Q: Have you had occasion to review the list of services that Sprint states on page 4 of that Petition that Sprint will provide to TWC?

A: Yes.

Q: Can we go through those services as they relate to the services SENTCO offers?

A: Yes.

Q: Does SENTCO provide transport services beyond SENTCO's boundary?

A: No. SENTCO owns no transport facilities beyond its boundary. Our network is wholly within our certificated service area.

Q: Does SENTCO provide Directory Assistance service to any third party carrier?

A: No, we do not.

Q: Does SENTCO provide any service through which SENTCO arranges to provide numbering resources to any third party carrier?

A: SENTCO provides number blocks to wireless carriers but those entities provide their own network-based services to their respective end users. All other numbering resources are used solely for our retail end user customers.

Q: Does SENTCO provide to any third party carrier numbering administration services?

A: No, we do not.

Q: Does SENTCO provide Local Number Portability?

A: No. SENTCO currently does not provide Local Number Portability ("LNP") based on the Commission's decisions entered in Applications No. C-3142 and C-3423 and the absence of any request for LNP from a competitive local exchange carrier. Moreover, LNP is not an issue in this proceeding since Sprint has not requested LNP from SENTCO.

Q: Does SENTCO provide any third party carrier access to emergency services (E911 or 911)?

A: We are fully E911 capable and offer access to this service to our retail end user customers. We do not provide E911 to any other carrier.

Q: Does SENTCO provide Operator Assistance service to any third party carrier?

A: No.

Q: Does SENTCO provide to any third party directory assistance call completion services?

A: No.

Q: Does SENTCO provide any third party carrier with assistance in obtaining telephone directory listings for that third party's end users?

A: No. Directory listings are provided only for our end user customers and we assist no other third party carrier in arranging for their end user directory listing information to be published in a telephone directory. In any event, directory listing service is not an issue in this proceeding because Sprint has not requested this type of arrangement from SENTCO.

Q: Are you aware of entities that provide some of the services about which you have been questioned?

A: Yes. I am aware that numbering resource administration services and LNP back office services are provided by consulting firms such as, for example, instances in which consultants prepare the necessary request for numbering resources and the necessary information to arrange for ports. I also am aware that directory assistance and operator services, along with associated call completion services are provided by third party carriers since SENTCO has entered into a contract with a third party to conduct certain of these functions on our behalf. I also am aware of the existence of private contracts for

transport services in those instances where a carrier requires some transport facilities for its network and, for example, where it is more economical to lease capacity from some entity that has the facilities in place.

Q: Does SENTCO offer any generally available telecommunications service pursuant to tariff for use by third party carriers as distinguished from end user customers?

A: Yes, but only through our interstate and intrastate access tariffs that I mentioned earlier.

Q: Does SENTCO provide any other telecommunications service pursuant to tariff for third party carriers in addition to exchange access?

A: No. We have no tariffs and have not entered into contracts that address the terms and conditions under which we would provide these telecommunications services to third party carriers.

Q: Is SENTCO opposed to a carrier entering private contracts with another entity to supplement that carrier's service and network capabilities?

A: No. Where companies require some type of network service or customer service or carrier service that the company cannot provide itself or where the company can contract with another entity for the function or service more economically, then private contracts for such services and functions are a commercially reasonable alternative. We are living proof of this fact since it is more economical for SENTCO to enter into such contracts such as that I noted previously. In the context of this proceeding, private contracts for the types of services that Sprint is going to provide to TWC are not uncommon and we do not suggest otherwise. If TWC wants to enter those types of private arrangements, TWC is free to do so. However, TWC must directly negotiate with us for terms and conditions under which it will interconnect and exchange traffic with SENTCO.

Q: Have you reviewed Sprint's responses to discovery issued by SENTCO in this proceeding?

A: Yes.

Q: Does Sprint admit that it has no tariffs in place with respect to the services it will provide to TWC?

A: Yes. I have attached that response to my testimony for the convenience of the Commission.

Q: Are you aware of any proceeding before the Commission in which Sprint has sought Commission approval of the agreement that Sprint has with TWC?

A: No. Based upon a review of orders issued by the Commission subsequent to the date of the Sprint-TWC Agreement, there is no record of such approval.

Q: You previously indicated that you reviewed the discovery responses provided by Sprint in this proceeding. Is that correct?

A: Yes.

Q: Based on those responses, are the end users that originate the traffic that Sprint would like to exchange with SENTCO under the ICA, Time Warner's end users or Sprint end users?

A: Based upon Sprint's discovery responses, and based upon the information provided by TWC at the public hearing held in connection with Application No. C-3228, which I attended in person, I think it is clear that the end users that originate the traffic that Sprint seeks to exchange with SENTCO under the ICA will be TWC's end users. Sprint has indicated that TWC will be the "customer-facing retail service provider" and Sprint's description of that relationship is that only TWC will have the end user relationship not Sprint.

Q: Does this conclude your direct testimony?

A: Yes.

RESPONSE TO DOCUMENT REQUEST NO. 2:

Subject to and without waiving Sprint's Objections, Sprint responds that after a diligent search and reasonable inquiry, it has not located any documents responsive to this Request.

DOCUMENT REQUEST NO. 3: Please produce copies of any contract or business agreement with Time Warner Cable and any other entity identified in response to Interrogatory No. 8 above in any way relating to a business arrangement to support the offering of local and long distance voice services in SENTCO's service area.

RESPONSE TO DOCUMENT REQUEST NO. 3:

Subject to and without waving Sprint's Objections, Sprint responds that it is producing a redacted copy of the agreement with Time Warner Cable in response to this Request, which is being produced as a Confidential Document pursuant to the terms and conditions of the Protective Order entered in this proceeding. Sprint has not identified any other agreements in response to Interrogatory No. 8. After a diligent search and reasonable inquiry, Sprint has not located any other documents responsive to this Request.

DOCUMENT REQUEST NO. 4: All documents not previously identified in any response to any discovery request known to you as containing, referring to, or relating to any facts relative to the matters at issue in this proceeding.

RESPONSE TO DOCUMENT REQUEST NO. 4:

Subject to and without waiving Sprint's Objections, Sprint responds that after a diligent search and reasonable inquiry, it has not located any documents responsive to this Request.

RESPONSES TO

REQUESTS FOR ADMISSIONS

REQUEST FOR ADMISSION NO. 1: Any end user customers located in SENTCO's local exchange service areas served or to be served through the business arrangement between Time Warner Cable and Sprint will be Time Warner Cable's end user customers and not Sprint's end user customers.

RESPONSE TO REQUEST FOR ADMISSION NO. 1:

Subject to, and without waving Sprint's Objections, Sprint responds as follows. To the extent the term "end user customers" means parties who receive billing and customer service functions directly from Time Warner Cable as the term "customer facing provider" is used in Sprint's responses to Interrogatory Nos. 1-2, Sprint responds as follows: Admit.

REQUEST FOR ADMISSION NO. 2: Time Warner Cable provides transport to its switch (or equivalent facility), which is then connected, to Sprint.

RESPONSE TO REQUEST FOR ADMISSION NO. 2:

Subject to, and without waving Sprint's Objections, Sprint responds as follows. Denied.

REQUEST FOR ADMISSION NO. 3: Sprint has not filed any tariff or contract with the Commission for approval that includes the terms and conditions for its provision of services to a Competing Service Provider.

RESPONSE TO REQUEST FOR ADMISSION NO. 3:

Subject to, and without waiving Sprint's Objections, Sprint responds as follows. Admit.

REQUEST FOR ADMISSION NO. 4: Each business arrangement with a Competing Service Provider is individually negotiated by Sprint.

RESPONSE TO REQUEST FOR ADMISSION NO. 4:

Subject to, and without waiving Sprint's Objections, Sprint responds as follows. After a reasonable inquiry, the information known or readily obtainable to Sprint is insufficient to permit Sprint to admit or deny this Request because there is only one agreement with a Competing Service Provider as that term is defined by SENTCO.

REQUEST FOR ADMISSION NO. 5: Each business arrangement with a Competing Service Provider is tailored to the specific relationship being contemplated, including (but not necessarily limited to) financial terms, terms commitments, and network capabilities and functions.

RESPONSE TO REQUEST FOR ADMISSION NO. 5:

Subject to, and without waiving Sprint's Objections, Sprint responds as follows. After a reasonable inquiry, the information known or readily obtainable to Sprint is insufficient to permit Sprint to admit or deny this Request because there is only one agreement with a Competing Service Provider as that term is defined by SENTCO.

REQUEST FOR ADMISSION NO. 6: The Commission has certificated Time Warner as a local exchange carrier.

RESPONSE TO REQUEST FOR ADMISSION NO. 6:

Pursuant to the Discovery Order, SENTCO has withdrawn this Request for Admission.

REQUEST FOR ADMISSION NO. 7: The only Competing Service Providers with which Sprint has entered business arrangements similar to that entered into with Time Warner are certificated local exchange carriers.

RESPONSE TO REQUEST FOR ADMISSION NO. 7:

Subject to, and without waiving Sprint's Objections, Sprint responds as follows. There is only one business arrangement with a Competing Service Provider as that term is defined by SENTCO, which is Time Warner Cable, and Sprint admits that Time Warner Cable has been certificated as a local exchange carrier by the Commission.

DATED: July 14, 2005.

SPRINT COMMUNICATIONS COMPANY L.P.

Diane C. Browning

Diane C. Browning

Attorney – Law and External Affairs
6450 Sprint Parkway
Mailstop KSOPHN0212-2A511
Overland Park, KS 66251
(913) 315-9284
(913) 523-0571

And

REED SMITH LLP
Darren S. Weingard
Raymond A. Cardozo
Two Embarcadero Center, Suite 2000
San Francisco, CA 94111
(415) 543-8700
(415) 391-8269

BEFORE THE NEBRASKA PUBLIC SERVICE COMMISSION

RECEIVED
JUL 25 2005
NEBRASKA PUBLIC SERVICE COMMISSION

IN RE:	)	
SPRINT COMMUNICATIONS	)	
COMPANY L.P. PETITION FOR	)	APPLICATION NO. C-3429
ARBITRATION UNDER THE	)	
TELECOMMUNICATIONS ACT	)	

SOUTHEAST NEBRASKA TELEPHONE COMPANY'S EXHIBIT DESIGNATIONS

Southeast Nebraska Telephone Company ("SENTCO") hereby identifies and designates the following exhibits in accordance with the Planning Conference Order entered herein by the Hearing Officer on June 28, 2005:

#	Description	Offered	Accepted
1	Petition for Arbitration, Application No. C-3429, May 23, 2005, filed by Sprint Communications Company L.P. ("Sprint")		
2	Motion to Dismiss or, in the Alternative, Response of Southeast Nebraska Telephone Company to Petition for Arbitration, Application No. C-3429, filed June 17, 2005 by Southeast Nebraska Telephone Company ("SENTCO")		
3	Direct Testimony of Elizabeth A. Sickel, Application C-3204, filed July 25, 2005, with attachment		
4	Correspondence from Paul Schudel to Monica Barone dated January 12, 2005		
5	Sprint's Amended Application for Statewide CLEC Authority, Application No. C-3204, filed with the Nebraska Public Service Commission and dated July 16, 2004		
6	Sprint's Responses to Intervenors' Data Requests, Application No. C-3204, dated September 21, 2004.		
7	Sprint's Confidential Responses to Intervenors' Data Requests, Application No. C-3204, dated September 21, 2004, including Supplements and including Wholesale Voice Services Agreement between Time Warner Cable Inc. and Sprint Communications Company, L.P. dated December 5, 2003		
8	Pre-filed Testimony of James R. Burt, Application No. C-3204, dated October 1, 2004		
9	Pre-filed Testimony of Dr. Brian K. Staihr, Application No. C-3204, dated October 1, 2004		
10	Transcript of hearing held on November 4, 2004, Application No. C-3204		
11	Post-Hearing Comments of Sprint, Application No. C-3204, dated January 3, 2005		
12	Application and Request of Time Warner Cable Information		

#	Description	Offered	Accepted
12	Application and Request of Time Warner Cable Information Services (Nebraska), LLC d/b/a Time Warner Cable ("Time Warner") for Statewide CLEC Authority, Application No. C-3228, filed with the Nebraska Public Service Commission, dated June 17, 2004, with attachments		
13	Time Warner's Responses and Objections to Data Requests of Commission Staff and Interveners, Application No. C-3228, dated September 1, 2004		
14	Pre-Filed Testimony of Julie Y. Patterson, Application No. C-3228, dated September 1, 2004		
15	Pre-Filed Testimony of Steven E. Watkins, Application No. C-3228, filed September 16, 2004		
16	Transcript of Hearing, Application No. C-3228, September 17, 2004		
17	Time Warner's Post-Hearing Brief, Application No. C-3228, dated October 7, 2004		
18	Sprint Communications Company, L.P. Tariffs filed with the Nebraska Public Service Commission		
19	Time Warner Cable Information Services, LLC d/b/a Time Warner Cable, Nebraska Tariffs filed with the Nebraska Public Service Commission		
20	Sprint Communications Company, L.P. Responses to Southeast Nebraska Telephone Company's First Set of Interrogatories, Requests to Produce Documents and Requests for Admissions dated July 14, 2005, with attachments		

DATED: July 25, 2005.

SOUTHEAST NEBRASKA TELEPHONE COMPANY

By: _____

Paul M. Schudel, No. 13723
James A. Overcash, No. 18627
WOODS & AITKEN LLP
301 South 13th St, Ste 500
Lincoln, NE 68508
(402) 437-8500

and

Thomas J. Moorman, D.C. Bar No. 384790
KRASKIN, MOORMAN & COSSON, LLC
2120 L Street, N.W., Suite 520
Washington, D.C. 20037
(202) 296-8890
Its Attorneys

CERTIFICATE OF SERVICE

I hereby certify that true and correct copies of the foregoing **SOUTHEAST NEBRASKA TELEPHONE COMPANY'S** were sent by First-Class U.S. Mail and electronic mail on July 25, 2005, to the following:

Diane C. Browning
6450 Sprint Parkway,
Mailstop KSOPHN0212-2A511
Overland Park, KS 66251

Shana Knutson
Nebraska Public Service Commission
300 The Atrium
1200 N Street
Lincoln, NE 68508

_____
Paul M. Schudel

ALLEN L. OVERCASH
PAUL M. SCHUDEL
EDWARD H. TRICKER
WM. LEE MERRITT
JOSEPH H. BADAMI
KERRY L. KESTER
ROBERT B. EVNEN
JOEL D. HEUSINGER
TERRY C. DOUGHERTY
JENNIFER J. STRAND
CRAIG C. DIRRIM
BRUCE A. SMITH
JEFFERY T. PEETZ
KENT E. ENDACOTT
KRISTA L. KESTER
JAMES A. OVERCASH
NATHAN J. GURNSEY
KORY D. GEORGE
ANDREW B. KOSZEWSKI
TODD W. WEIDEMANN
DAVID J. MCCLURE

WOODS & AITKEN L · L · P

LINCOLN OFFICE
SUITE 500
301 SOUTH 13TH STREET
LINCOLN, NEBRASKA 68508-2578
TELEPHONE 402-437-8500
FAX 402-437-8558

OMAHA OFFICE
SUITE 350
10250 REGENCY CIRCLE
OMAHA, NEBRASKA 68114-3754
TELEPHONE 402-898-7400
FAX 402-898-7401

WWW.WOODSAITKEN.COM

FILE COPY

January 12, 2005

Email: Pschudel@woodsaitken.com
Direct Dial: (402) 437-8509

Please Respond to Lincoln Office

VIA EMAIL AND U.S. MAIL

Monica M. Barone, Esq.
Mail Stop KSOPHN0212-2A203
6450 Sprint Parkway
Overland Park, Kansas 66251

Dear Monica:

On behalf of Southeast Nebraska Telephone Company ("SENTCO"), this letter responds to your January 5, 2005 correspondence written on behalf of Sprint Communications Company L.P. ("Sprint"). You may be correct that a call between us may have assisted efforts to resolve the confusion created by Sprint's various "stops and starts" that have occurred with respect to the nature of the interconnection that Sprint seeks from SENTCO. One constructive step that we can accomplish at this point is to assure that our respective files are complete with regard to prior communications between our clients on this subject. SENTCO received communications during 2004 from three Sprint representatives, Nicole E. Corsair, John Chuang and Vanessa J. Ruperto relating to interconnection matters. Several of such communications were in the form of emails. Because the attachments to your letter to me represent only a portion of such communications, I have attached copies of the remaining communications between Sprint and SENTCO that bear upon this matter of which I am aware. If you are aware of any other relevant communications, please feel free to share them with me.

From the outset, I want to make sure that you are aware of SENTCO's position regarding Sprint's communications concerning interconnection. In order to establish a clear understanding as to the nature of the interconnection sought by Sprint, SENTCO has consistently asked for information that would assist it in evaluating Sprint's request. The attached documentation confirms this fact. However, Sprint has consistently either declined to specify the interconnection arrangement it seeks from SENTCO or has modified the nature of such arrangement. Ms. Sickel's letter to John Chuang dated September 9, 2004 (a copy of which is attached to your January 5 letter), specifically stated that SENTCO "would be willing to discuss a voluntary schedule as a basis

Exhibit 4
Lm 8-18-05

for future discussions," assuming responses were provided to SENTCO's questions seeking additional information. Any inference in your letter that SENTCO is refusing to discuss interconnection matters with Sprint does not accurately portray the record of communications between the parties.

In any event, your January 5 letter still does not provide additional clarity to the unanswered question SENTCO has recently raised. Namely, what aspect of Section 251(c) does Sprint believe its request triggers? In fact, a reasonable reading of your January 5 letter creates additional questions.

For example, there is an inference in early paragraphs of your letter that Sprint's transmittal of the November 13 letter to the Nebraska Public Service Commission was an error, culminating in your explicit statement on page 2 (paragraph 2) that Sprint "is **not** seeking UNEs, resale or collocation. Sprint is not sure what else it can provide at this point." (emphasis in original). From these statements, one might conclude that Section 251(c) is not implicated at all in Sprint's request. On the other hand, your very next statement is that the "parties must sit down to discuss Sprint's proposal so that Sprint and SENTCO can jointly determine if Section 251(c) obligations are even implicated and thus, whether the Section 251(f)(1) rural exemption is even an issue."[1] Quite frankly, it is Sprint, *and not SENTCO*, that must determine what it seeks, and the implications that arise therefrom as relates to Section 251(c) and Section 251(f)(1).

Similarly, SENTCO does not know how to interpret your discussion of the Commission's policies and procedures established in the Order entered in Application No. C-3228 with respect to addressing requests for interconnection in which Sprint's purported "enabler" status is implicated. If Sprint's November 13 letter was transmitted to SENTCO to address Sprint's services to retail end user customers, then please say so. If not, then the procedures provided in the C-3228 Order appear to be relevant. To that end, it may simply be more efficient for both Sprint and SENTCO to seek the Commission's guidance on this aspect of your letter, particularly since SENTCO has notified the Commission previously that such direction was necessary. *See* attached copy of my letter to Mr. Hand dated December 23, 2004.

Rather than continue to belabor these points, however, SENTCO believes it would be constructive for the parties to participate in a meeting facilitated by one or more representatives of the Commission and/or its Staff. The purpose of such meeting would be solely to discuss the nature of the interconnection arrangement that Sprint seeks from SENTCO and to exchange information

---

[1] You mention later that "I am sure you are aware, a rural carrier is only relieved of its obligations under 251(c) of the Act (until the relevant Commission lifts the rural carrier's exemption)." Possibly a drafting error occurred in this aspect of your letter because I am not sure I fully understand your use of the term "until" in the context of your sentence. In any event, I can agree that the Act makes clear that a rural telephone company's exemption from the requirements established in Section 251(c) continues until the state commission removes the exemption pursuant to the procedures established in Section 251(f)(1).

that would ensure each party understands the scope of the request being made. The Commission's involvement will not only help us address the impact of the Commission's Order in Application No. C-3228 on Sprint's November 13 correspondence, but moreover such involvement should also facilitate achievement of Sprint's stated goal of ending "the apparent continued confusion" (an objective that SENTCO fully supports). As such, subject to identifying a mutually acceptable date for all parties, SENTCO agrees that this meeting should take place by the January 19 date you mention or as soon thereafter as possible.

In the spirit of ensuring clarity with respect to SENTCO's position, and based on your letter, SENTCO envisions that our discussion would address Section 251(b) arrangements that Sprint seeks from SENTCO as it relates to the services that Sprint will be providing to its retail end users. SENTCO's Section 251(a) offerings to other carriers are reflected in its exchange access tariffs. The discussion regarding the Commission's Order entered in Application No. C-3228 would address whether the Commission or its Staff believes that the procedures established in that decision apply. While SENTCO does not understand that Sprint has adopted a contrary position, SENTCO also wants to make clear that it does not intend to engage in discussions with respect to arrangements that are "without regard to the standards set forth in subsection[ ] (b) . . . of section 251." 47 U.S.C. §252(a)(1). To the extent that Sprint may seek to discuss any arrangement that is "without regard" to the established interconnection standards and controlling rules associated with Sections 251(b) of the Act, please let me know. Finally, each party would reserve its respective rights under Section 251(f)(1) of the Act in the event such rights are asserted at a later date

SENTCO looks forward to your response. SENTCO reaffirms its request that all correspondence regarding this matter be sent to me. If, in the future, SENTCO determines a different procedure should be used, I will let you know.

Very truly yours,

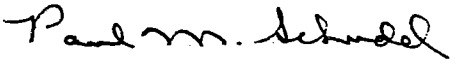

PMS|dh
Enclosures
cc: Mr. M. Gene Hand, Nebraska Public Service Commission (Via Hand Delivery, w/encls.)
Angela Melton, Esq., Nebraska Public Service Commission (Via Hand Delivery, w/encls.)
Elizabeth Sickel (via Email and US Mail, w/encls.)

bcc: Dwight Wininger (via Email, w/encls.)
Tom Moorman (via Email, w/encls.)

---- Original Message ----
From: Corsair, Nicole E [SBS]
To: esickel@sentco.net
Sent: Wednesday, March 10, 2004 11:00 AM
Subject: Traffic Termination Agreement with Sprint

Ms. Sickel,

You have been identified as the individual who negotiates agreements for Southeast Nebraska Telephone Company. Please find attached a Traffic Termination Agreement for your review and consideration. I would like to use this document to negotiate an agreement between Southeast Nebraska and Sprint. If you would like to suggest changes to the agreement, please do so in Word using the track changes function for negotiation purposes. Please contact me at the number below to schedule a time for negotiations or if you have any questions.

I would like to hear back from you by next Wednesday, March 17. Thank you for your time.

<<Mutual Traffic Exchange Agreement 021304.doc>>

Nicole E. Corsair

Sprint - Wholesale & Interconnection Management

Mailstop: KSOPHN0212-2A304

6450 Sprint Parkway

Overland Park, KS 66251

Voice: (913) 315-9664

Fax: (913) 315-0785

Email: Nicole.E.Corsair@mail.sprint.com

—— Original Message ——
From: Corsair, Nicole E [SBS]
To: Elizabeth Sickel - Southeast Nebraska Telephone
Sent: Monday, May 24, 2004 8:11 AM
Subject: FW: Agreement with Sprint

Ms. Sickel,

As your letter to me dated April 15, 2004, stated, Sprint did not previously have CLEC certification to operate in SENTCO's service area. Since that time, Sprint Communications Company L.P. has applied for statewide CLEC certification in Nebraska. You may view our pending application at the following Nebraska Public Service Commission Web address: http://www.psc.state.ne.us/home/NPSC/communication/CommPend.PDF.

Date Filed: 5/11/04
Application Number: C-3204
Applicant: Sprint Communications, LP
Staff Attorney: CP
Type: Expand CLEC

Now that Sprint has filed for expanded CLEC certification, we would like to request the commencement of negotiations. Please reply to this email to confirm receipt and let me know which agreement you would like to negotiate from (or if SENTCO would like to propose a template to begin with). As stated previously, we feel that a mutual traffic termination agreement is sufficient for our purposes, but we will be glad to negotiate an interconnection agreement if that is your preference.

Thank you for your time and consideration. I look forward to working with you.

Nicole Corsair
Sprint - Wholesale & Interconnection Management
Mailstop: KSOPHN0212-2A304
6450 Sprint Parkway
Overland Park, KS 66251

Voice: (913) 315-9664
Fax: (913) 315-0785
Email: Nicole.E.Corsair@mail.sprint.com

-----Original Message-----
From: Corsair, Nicole E [SBS]
Sent: Monday, April 12, 2004 11:34 AM
To: 'Elizabeth Sickel - Southeast Nebraska Telephone'
Subject: Agreement with Sprint

Ms. Sickel,

As promised, I have attached a template Interconnection Agreement. As I mentioned, Sprint only plans to exchange voice traffic with you, and I believe the Traffic Termination Agreement I sent previously is sufficient for our purposes, so I've attached it again if you would like to consider it. However, if you feel that a more sophisticated agreement is warranted, I am more than happy to negotiate the IA with you. Thank you for your consideration and I look forward to working with you.

Please reply to this email to confirm receipt and set a tentative timeline for review and negotiation.

Nicole E. Corsair
Sprint - Wholesale & Interconnection Management
Mailstop: KSOPHN0212-2A304
6450 Sprint Parkway
Overland Park, KS 66251
Voice: (913) 315-9664
Fax: (913) 315-0785
Email: Nicole.E.Corsair@mail.sprint.com

Sprint.

Nicole E. Corsair
Wholesale & Interconnection Mgmt.
KSOPHN0212-2A304
6450 Sprint Parkway
Overland Park, KS 66251
Voice: 913-315-9664
Nicole.E.Corsair@mail.sprint.com

JUN 2004
RECEIVED
WOODS, AITKEN

June 15, 2004

Ms. Elizabeth Sickel
Southeast Nebraska Telephone Company
110 W. 17th St.
Falls City, NE 68355

Dear Ms. Sickel,

Pursuant to my emails to you dated May 24, 2004, April 12, 2004 and March 10, 2004, Sprint Communications Company L.P. ("Sprint"), hereby formally states its intent to negotiate an agreement with Southeast Nebraska Telephone Company for the mutual exchange and termination of telecommunications traffic via an interconnection arrangement between the parties' networks, pursuant to §251 and §252 of the Telecommunications Act of 1996. The date of this notice shall serve as the starting point for the one hundred thirty-five (135) day negotiation window under §252 of the Act.

I will serve as Sprint's point of contact for the purpose of negotiating an agreement with Southeast Nebraska Telephone Company, including any related notices or communications. My direct phone number and e-mail address are listed on the letterhead above. Please acknowledge to me, via either e-mail or United States Postal Service mail, that you have received this correspondence.

Attached, please find an Interconnection Agreement for your review and consideration. Please contact me at your earliest convenience to begin negotiating this agreement. Thank you for your time and attention to this matter.

Sincerely,

Nicole E. Corsair

Nicole E. Corsair
Wholesale & Interconnection Mgmt.
(913) 315-9664

RECEIVED

JUN 16 2004

SOUTHEAST NEBRASKA
TELEPHONE COMPANY

---- Original Message ----
From: Corsair, Nicole E [SBS]
To: Elizabeth Sickel - Southeast Nebraska Telephone
Sent: Friday, July 23, 2004 12:53 PM
Subject: RE: SENTCO - network diagram & 10-digit dialing

Elizabeth,

Here it is again. It's in Microsoft PowerPoint.

Thanks!
Nicole

-----Original Message-----
From: Elizabeth Sickel - Southeast Nebraska Telephone [mailto:esickel@sentco.net]
Sent: Friday, July 23, 2004 12:40 PM
To: Corsair, Nicole E [SBS]
Subject: Re: SENTCO - network diagram & 10-digit dialing

Nicole,

Thank you for sending the network diagram. However, I am unable to open the document. Can you tell me what program it is in?

Thanks,

Elizabeth A. Sickel
Southeast Nebraska Telephone Company
110 West 17th Street
Falls City, NE 68355
402-245-4451
402-245-4770 (fax)

---- Original Message ----
From: Corsair, Nicole E [SBS]
To: Elizabeth Sickel - Southeast Nebraska Telephone
Cc: Feeney, Kathryn L [SBS] ; Cleveland, Lynda A [SBS]
Sent: Friday, July 23, 2004 8:47 AM
Subject: SENTCO - network diagram & 10-digit dialing

Elizabeth,

Please find attached a network diagram regarding the path of calls as you requested. Also, you had asked about 10-digit dialing and Legal has explained that SENTCO customers would not have to dial 10 digits to

reach Sprint customers unless SENTCO chooses to require them to do so.

If you have any questions, please contact Kathryn Feeney at (913) 315-9073 or Kathryn.L.Feeney@mail.sprint.com. She will be taking over or assigning this account as today is my last day with the Interconnection group.

Thank you,

Nicole

<<Simplified Architecture.ppt>>

Nicole Corsair

Sprint - Wholesale & Interconnection Management

Mailstop: KSOPHN0116-1B460

6450 Sprint Parkway

Overland Park, KS 66251

Voice: (913) 315-9664

Email: Nicole.E.Corsair@mail.sprint.com

----- Original Message -----
From: Chuang, John Y [SBS]
To: esickel@sentco.net
Sent: Wednesday, August 18, 2004 12:40 PM
Subject: Draft Interconnection Agreement

<<ICA_Template_Citizens.doc>>

Beth,

As discussed, here is a new template agreement that better describes how we would interconnect. This agreement is the same agreement we signed with Citizens and other rural ILECs in Nebraska and converted to a template for our purposes. Sprint is looking for interconnection and any related ancillary services.

In reviewing our files, and it appears that Nicole had sent you a letter dated June 15, 2003 in which Sprint formally requested negotiations. Nicole notes that the date of the request letter as the starting point for the negotiations clock under Section 252 of the Telecom Act. Although I don't anticipate that we will have any issues with the timeframe, I want to make sure that we are on the same page with regard to the clock. Please let me know if you disagree with June 15, 2003 as the start date of negotiations.

I would like to set up a meeting to discuss our next steps as soon as you have time to review the document. Please provide me an estimate on when SE Nebraska Telephone will have completed its review.

Please feel free to contact me if you have any questions. Thank you in advance for your attention to this matter.

John Chuang
(913) 315-9065
6450 Sprint Parkway
MS: KSOPHN0116-1B370
Overland Park, KS 66251

—— Original Message ——
From: Ruperto, Vanessa J [SBS]
To: Elizabeth Sickel - Southeast Nebraska Telephone
Sent: Monday, September 27, 2004 3:05 PM
Subject: RE: Southeast Nebraska Telephone Company

Elizabeth,

The purpose of my email is twofold. First, I wanted to let you know that our Network department is working on the drawings and we hope to have something to you soon.

Second, in your letter date September 9th you asked us to verify your assumption that our existing access/toll arrangement would not be altered. Are you referring to the location where we currently hand off traffic? Any clarification you can provide would help us better address your assumption.

Thank you,
Vanessa

-----Original Message-----
From: Elizabeth Sickel - Southeast Nebraska Telephone [mailto:esickel@sentco.net]
Sent: Thursday, September 16, 2004 9:09 AM

To: Chuang, John Y [SBS]
Cc: Ruperto, Vanessa J [SBS]
Subject: Re: Southeast Nebraska Telephone Company

John and Vanessa,

Thank you for the reply. I will await your written communication as indicated.

Beth

---- Original Message ----
From: Chuang, John Y [SBS]
To: Elizabeth Sickel - Southeast Nebraska Telephone
Cc: Ruperto, Vanessa J [SBS]
Sent: Tuesday, September 14, 2004 10:50 AM
Subject: RE: Southeast Nebraska Telephone Company

Beth,

We will be providing a written response to your letter and provide you the diagrams you have requested.

The purpose of my call was twofold. First, I wanted to get clarification from you on what SE Telephone's position is on interconnection. Based on our last conversation, it seemed that you were concerned about the financial responsibility of the parties for the facilities. If you can communicate what some of SE Telephone's concerns are, we can gather the necessary documentation and diagrams to address your concerns.

The second was to introduce Vanessa Ruperto as the person that will be working with you on this agreement going forward. My last day at Sprint is this Friday. Our apologies for the musical chairs but we've had some organizational and responsibility changes here. Vanessa is very capable and responsive and is committed to seeing this agreement through. Vanessa can be contacted at (913) 315-9768.

Please feel free to contact Vanessa or me if you have any questions or comments. Thanks.

John Chuang
(913) 315-9065
6450 Sprint Parkway
MS: KSOPHN0116-1B370
Overland Park, KS 66251

-----Original Message-----
From: Elizabeth Sickel - Southeast Nebraska Telephone [mailto:esickel@sentco.net]
Sent: Tuesday, September 14, 2004 9:02 AM
To: Chuang, John Y [SBS]
Subject: Southeast Nebraska Telephone Company

John,

Last week you requested that we schedule a call related to your August 18th

email. I faxed you a letter on September 9th in which I asked you for information that we required before we could address your August 18th email. I think that a written response to my September 9th letter would allow us to have a more productive conversation. Accordingly, I will look forward to receiving your written response.

Beth

Elizabeth A. Sickel
Southeast Nebraska Telephone Company
110 West 17th Street
Falls City, NE 68355
402-245-4451
402-245-4770 (fax)

ALLEN L. OVERCASH
PAUL M. SCHUDEL
EDWARD H. TRICKER
WM. LEE MERRITT
JOSEPH H. BADAMI
KERRY L. KESTER
ROBERT B. EVNEN
JOEL D. HEUSINGER
TERRY C. DOUGHERTY
JENNIFER J. STRAND
CRAIG C. DIRRIM
BRUCE A. SMITH
JEFFERY T. PEETZ
KENT E. ENDACOTT
KRISTA L. KESTER
JAMES A. OVERCASH
NATHAN J. GURNSEY
KORY D. GEORGE
ANDREW B. KOSZEWSKI
TODD W. WEIDEMANN
DAVID J. MCCLURE

WOODS & AITKEN
L · L · P

FILE COPY

LINCOLN OFFICE
SUITE 500
301 SOUTH 13TH STREET
LINCOLN, NEBRASKA 68508-2578
TELEPHONE 402-437-8500
FAX 402-437-8558

OMAHA OFFICE
SUITE 350
10250 REGENCY CIRCLE
OMAHA, NEBRASKA 68114-3754
TELEPHONE 402-898-7400
FAX 402-898-7401

WWW.WOODSAITKEN.COM
Please Respond to Lincoln Office

December 15, 2004

Email: PSchudel@woodsaitken.com
Direct Dial: (402) 437-8509

VIA HAND DELIVERY

Mr. M. Gene Hand
Director of Telecommunications
Nebraska Public Service Commission
300 The Atrium, 1200 N Street
Lincoln, NE 68508

Re: Application No. C-3228, Time Warner Cable Information Services, LLC, d/b/a Time Warner Cable, Nebraska, Stamford, Connecticut, for a Certificate of Authority to provide local and interexchange voice services within the state of Nebraska.

Dear Gene:

As you are aware, this Law Firm is legal counsel for Southeast Nebraska Telephone Company ("SENTCO") in the above-referenced matter. This letter is provided to you on behalf of SENTCO and to ensure compliance with the directives contained in the November 23, 2004 decision issued by the Nebraska Public Service Commission ("Commission") in the above-captioned matter (the "Order"). As you are aware, in the Order the Commission required Time Warner Cable Information Services, LLC, d/b/a Time Warner Cable, Nebraska ("Time Warner") to notify the Commission when it seeks interconnection from a "rural telephone company" (*see* Order at 6 and 10 (Ordering Clause No. 2)), a class of incumbent local exchange carrier defined in Section 153(37) of the Communications Act of 1934, as amended, and of which SENTCO is a member.

Prior to the issuance of the Commission's Order, SENTCO received a letter from Sprint Business Solutions ("SBS"), dated November 13, 2004, purporting to be a request for interconnection. *See* attached (without enclosures). Although no mention is made of Time Warner, the Commission is well aware that Sprint Communications Company L.P. ("Sprint") has filed Application No. C-3204 wherein Sprint seeks intrastate authority to act as an "enabler" for Time Warner's planned provision of local and interexchange telecommunications services to its end users within Nebraska, including local exchange areas served by SENTCO. In light of the timing of the SBS letter, and out of an abundance

of caution, SENTCO desires to ensure that the receipt of the SBS correspondence is not regarded as a trigger of the 30-day response period required of SENTCO. *See* Order at 6.

Because the attached letter was received by SENTCO prior to the Order being entered and does not mention Time Warner, and because to the best of SENTCO's knowledge, Time Warner has made *no* filing in response to the Commission's directives contained in the Order, SENTCO respectfully submits that it is not required to respond to the SBS letter under the Time Warner-specific procedures adopted in the Order. In the unlikely event that the Commission determines otherwise, SENTCO respectfully requests that any subsequent 30-day period begins to run from the date that the Commission notifies SENTCO of any such determination.

In the event you wish to confer with regard to the foregoing points, please contact me in order that a mutually convenient time for such conference may be scheduled.

Very truly yours,

Paul M. Schudel

PMS|dh
Enclosure
cc: Travis S. Tyler, Esq.
Shana Knutson, Esq.
Elizabeth Sickel

BEFORE THE NEBRASKA PUBLIC SERVICE COMMISSION\

In the Matter of Application of Sprint Communications Company L.P. for an Amendment to its Certificate of Public Convenience and Necessity to Provide Local Exchange Telecommunications Service in all Exchanges within the State of Nebraska in which Sprint is not Currently Certified to Provide Local Exchange Service	)))))))	**Application No. 3204**

JUL 2004
RECEIVED
WOODS. AITKEN

AMENDED APPLICATION

Sprint Communications Company L.P. ("Sprint") applies to the Nebraska Public Service Commission (Commission) for an Amendment to its Certificate of Public Convenience and Necessity to provide local exchange telecommunications services in all exchanges within the State of Nebraska in which Sprint is not currently certified. Granting Sprint's request is in the public interest in that Nebraska consumers will benefit from multiple competitive supply, increased choice and market sensitive prices. Sprint has previously demonstrated, through Applications to this Commission, that it has the legal authority, and sufficient technical, financial and managerial resources to provide local exchange services. This Application and its associated exhibits demonstrate that Sprint continues to possess the necessary legal authority and technical, financial and managerial resources to provide local exchange services. In support, Sprint provides the following verified information:

1. Sprint is a limited partnership consisting of one general and three limited partners, all of which are wholly-owned subsidiaries of Sprint Corporation. Sprint's headquarters are located at 6200 Sprint Parkway, Overland Park, Kansas 66251. Sprint Corporation's headquarters are located at 6200 Sprint Parkway, Overland Park, Kansas 66251.

Exhibit
5
8-10-05

2. This Commission has recognized in various proceedings the legal authority of Sprint and its predecessors to provide telecommunications services, including Application Nos. C-670 and C-552. Most recently the Commission, by order entered March 10, 1997 in Application No. C-1386, granted Sprint authority to provide local exchange service in the areas served by US West[1], GTE Midwest Incorporated, Citizens/Frontier) Aliant Communications, Inc.[2] and United Telephone Company of the West d/b/a Sprint (United). The Commission stated that Sprint must make further application to the Commission for authority to provide local exchange service outside these areas.

3. Pursuant to the Commission's direction in Application No. C-1386 and Neb. Rev. Stat. § 86-128, Sprint requests authority to provide local exchange and exchange access service in all exchanges within Nebraska in which Sprint is not currently certified and that its certificate of public convenience and necessity be amended accordingly.

4. Any inquiries regarding this Application and copies of all pleadings, correspondence, and orders in this matter should be delivered to:

Monica M. Barone
Mail Stop KSOPHN0212-2A203
6450 Sprint Parkway
Overland Park, Kansas 66251
Voice: (913) 315-9134
Fax: (913) 523-2728
monica.barone@mail.sprint.com

5. Neither Sprint nor any of its management has any interest in any entity that has had regulatory approval revoked or suspended in Nebraska or in any other state, nor are they involved in any pending proceeding to such effect.

[1] The legal entity is now Qwest.
[2] The legal entity is now Alltel.

0606

6. Sprint possesses substantial expertise in the provision of telecommunications services in Nebraska. Sprint also has extensive managerial, technical and operations experience in the provisioning, marketing and operation of telecommunications facilities and services in Nebraska. In this regard, this Commission previously determined that Sprint has sufficient financial, technical and managerial capabilities when it granted Sprint certificates to provide intrastate interLATA services, certain intraLATA services and local exchange services in the service territories of US West, GTE, Aliant and United. See Application Nos. C-552, C-670 and C-1386.

8. Sprint has available to it managerial, technical, and operational resources and expertise for the same purposes from its globally situated parent and affiliate companies. Sprint is the third largest long distance company. Sprint Corporation, through its local telecommunications division, currently provides local telephone service in eighteen (18) states. Accordingly, Sprint and its parent company, Sprint Corporation, are very experienced in providing dial tone services, access, 911, network maintenance and monitoring as well as with complying with all applicable state commission rules and regulations.

9. Sprint has sufficient financial resources to provide the proposed services, as evidenced by the attached Exhibit A, which is a copy of Sprint's 2003 Annual Report. This report contains the most recent financial statements for Sprint Corporation, the parent corporation of Sprint Communications Company L.P. It reflects financial statements and identifies shareholders having a beneficial interest in 5% or more of applicant's voting securities.

10. Sprint also provides with this Application Exhibit B which contains copies of Sprint's Annual Report for 2001 and 10-K for 2002.

11. Sprint has an excellent senior management team, backed by thousands of experienced employees, who are competent in telephony engineering, operations and marketing. Attached as Exhibit C are the names and biographies of Sprint's senior management team. In addition, Sprint has established a group within its external affairs department to provide assistance in support of Sprint's initiative in Nebraska.

12. Sprint's registered agent in Nebraska is:

Prentice-Hall Corporation System, Inc.
Suite 1900
233 South 13th Street
Lincoln, NE 68508

13. Sprint's customer complaint contact in Nebraska is:

Charles Simino
Regulatory Affairs Manager, Sprint
301 South 13th Street, Suite 401-H
Lincoln, Nebraska 68508-2532
Voice: 402-441-9335
Fax: 402-441-9338
Email: Charles.G.Simino@mail.sprint.com

14. Sprint currently transacts business in all 50 states. Sprint provides interLATA service in each of those states. Sprint is also authorized to provide local exchange services in 48 states and Puerto Rico.

15. Attached as Exhibit D is a copy of a letter of good standing from the State of Nebraska that demonstrates that Sprint is authorized to conduct business within the State of Nebraska. Sprint previously filed a copy of Sprint Corporation's Articles of Incorporation with the Commission. Should the Commission require an additional copy, Sprint will provide it expeditiously. 0608

16. Sprint has provided interLATA interexchange service in Nebraska since 1985, and intraLATA interexchange services in Nebraska since 1987. Sprint is also authorized to provide local exchange services as provided for by order of this

Commission in Application C-1386 entered March 10, 1997. Any formal complaints or other investigatory or enforcement proceedings involving the business operations of Sprint, its officers, directors or shareholders are on file with the Commission.

17. Initially, Sprint proposes to provide transport, switching and interconnection for the origination and termination of local and long distance traffic. These services will be provided upon request of wholesale customers within the state of Nebraska. No deposits will be required. Prior to providing local switched service, Sprint will make the appropriate filing with the Commission describing the terms and conditions under which it will provide such services, including any required advance payment and/or deposits. Should the Commission require a bond in the event Sprint requires advance payment and/or deposit, Sprint will comply.

18. Granting this Application is consistent with this Commission's previous determination to adopt the pro-competitive policies of the Telecommunications Act. Indeed, Nebraska consumers will benefit from the multiple competitive supply that will result from the services described in this Application. Further, approval of this Application will not adversely affect universal service in the service areas for which certification is granted. Moreover, Sprint acknowledges once again its obligation to aid in maintaining the goal of universal service local service, to the extent non-discriminatory, competitively neutral universal service funding mechanisms are established by the Commission, so that affordable basic local exchange service is available. In addition, Sprint will provide address based 911 and E911 service, and, when applicable, directory assistance and operator services. Further, the services Sprint provides will be compatible with telephone relay service.

0609

19. As noted above, this Commission has previously granted certificates to provide Sprint services other than local exchange services in Application Nos. C-552 and C-670. Exhibit E contains copies of the orders issued in those Applications granting Sprint the authority to provide interLATA and intraLATA services.

20. Sprint is familiar with the laws and regulations of the Commission governing local exchange telecommunications services in Nebraska and will provide service in accordance with all laws, rules and regulations to the extent they are not preempted by the Federal Act.

WHEREFORE, Sprint respectfully requests the Commission to enter an order granting Sprint authority to provide local exchange service in all exchanges within the state of Nebraska in which Sprint is not currently certified, and that Sprint's certificate of public convenience be amended accordingly.

Respectfully submitted this 16th day of July, 2004,

Respectfully submitted,

SPRINT

Monica M. Barone
Mail Stop KSOPHN0212-2A203
6450 Sprint Parkway
Overland Park, Kansas 66251
Voice: (913) 315-9134
Fax: (913) 523-2728
monica.barone@mail.sprint.com

0610

CERTIFICATE OF SERVICE

The undersigned does hereby certify that a copy of the above and foregoing document was served via U.S. Mail, postage prepaid, on this 16 day of July, 2004.

Paul M. Schudel
James A. Overcash
Woods & Aitken LLP
301 S. 13th Street, Suite 500
Lincoln, Nebraska 68508-2578

Timothy F. Clare
Troy S. Kirk
Rembolt, Ludtke & Berger, LLP
1201 Lincoln Mall, Suite 102
Lincoln, Nebraska 6850

Mary Yoshi

0611

VERIFICATION

STATE OF KANSAS)
) ss:
COUNTY OF JOHNSON)

Kenneth Schifman, being first duly sworn, says that he is a General Attorney representing Sprint Communications Company L.P. and is authorized to verify this Amended Application on behalf of Sprint, and further that the information contained in the above Amended Application is correct and accurate to the best of his information and belief.

Kenneth Schifman

Subscribed and sworn to before me this 16 day of July, 2004.

Mary Joshi
Notary Public

My Commission Expires: March 5, 2005

NOTARY PUBLIC – State of Kansas
MARY K. JOSHI
My Appt. Exp. 3-5-04

0612

BEFORE THE NEBRASKA PUBLIC SERVICE COMMISSION

In the Matter of Application of Sprint Communications Company L.P. for an Amendment to its Certificate of Public Convenience and Necessity to Provide Local Exchange Telecommunications Service in all Exchanges within the State of Nebraska in which Sprint is not Currently Certified to Provide Local Exchange Service	))))))	Application No. C-3204

SPRINT'S RESPONSES TO INTEVENORS' DATA REQUESTS

COMES NOW Sprint Communications Company L.P. (Hereinafter "Sprint") hereby submits its responses to the Intervenors' Data Requests.

Request No. 1: Please identify each and every person who provided responses in this discovery request.

Response No. 1: Jim Burt and Dr. Brian Staihr

Request No. 2: Please describe the emergency procedures Sprint would use in the event of a power loss at its customer premise, in the network between its customer premise and the central office, and at the Sprint central office. If your answer includes reliance on any third party, please identify such party, and the emergency procedures utilized by the third party.

Response No. 2:
(Jim Burt)

Sprint does not provide service at the customer premise and there is no central office. Sprint does employ a switch within its network that is maintained in the following manner.

Each Sprint switching site is protected by an UPS (uninterruptible power system) capable of maintaining a switch site until primary power is re-established. The first line of defense in the event of power loss is a bank of batteries that provide immediate support to equipment once power loss is detected. Each Sprint switch site has onsite generators capable of fully sustaining all power needs at the site. Once the generators are active, the battery banks are placed in an active standby mode at which point the generators continuously run until primary power is re-activated and proven to be stable.

Exhibit
6
Lr 8-10-05

Request No. 3: Please describe the manner in which Sprint intends to determine how remittances to the Nebraska Universal Service Fund (NUSF) will be calculated for packaged, bundled or promotional service offerings and describe the allocation method that Sprint will use to determine intrastate versus interstate telecommunications services.

Response No. 3:
(Jim Burt)

Not applicable.

Request No. 4: Please state whether Sprint intends to seek Federal Universal Service Fund support, Nebraska Universal Service Fund support or both in connection with its provision of competitive local exchange service for which authority is sought pursuant to Sprint's Amended Application.

Response No. 4:
(Dr. Brian Stairh)

At this point in time Sprint has no plans to seek support from either the Federal Universal Service Fund or the Nebraska Universal Service Fund for the services that will be provided once it has received CLEC certification.

Request No. 5: In paragraph 17 of the Amended Application, Sprint states: "Initially, Sprint proposes to provide transport, switching and interconnection for the origination and termination of local and long distance traffic. These services will be provided upon request of wholesale customers within the state of Nebraska." Are Time Warner Cable Information Services, LLC (or any affiliate thereof) (collectively "Time Warner") and/or USA Companies (or any affiliate thereof) (collectively "USA Companies") "wholesale customers" to whom such services will be provided? If so, please describe with particularity all network arrangements and facilities to be utilized in connection with the provision of such services to Time Warner and/or USA Companies, and please produce copies of any and all documents describing such network arrangements and facilities, or otherwise evidencing Sprint's relationship with Time Warner and/or USA Companies.

Response No. 5:

(Jim Burt)

Sprint is responding to this request as instructed by the Hearing Officer's order entered September 15, 2004.

Yes. Time Warner Cable and USA Companies are wholesale customers of Sprint in the state of Nebraska. Attached as Confidential Exhibit A to this response is a redacted

version of the wholesale agreement between Sprint and Time Warner that provides evidence of the relationship.

**** CONFIDENTIAL RESPONSE/TRADE SECRET:

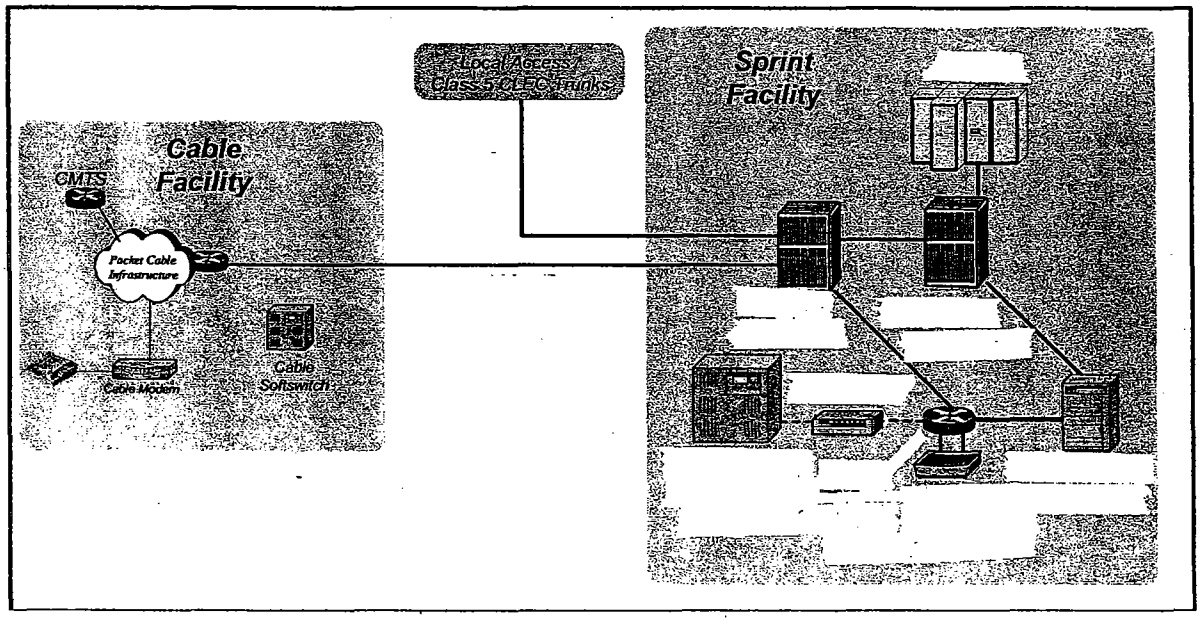

0615

Request No. 6: Further, in paragraph 17 of the Amended Application, Sprint states: "Prior to providing local switched service, Sprint will make the appropriate filing with the Commission describing the terms and conditions under which it will provide such services, including any required advance payment and/or deposits." Please explain whether Sprint has any current plans to provide retail telecommunications services within the geographic areas for which Sprint seeks certification pursuant to the Amended Application. If such plans exist, describe with particularity the exact nature of such plans, including but not limited to the specific incumbent local exchange carrier exchange area or areas in which retail telecommunications services are proposed to be offered, and please produce copies of any and all documents describing such plans.

Response No. 6:
(Jim Burt)

Sprint has no current plans to provide retail telecommunications services within the geographic areas for which Sprint seeks certification pursuant to the Amended Application. Sprint is seeking certification so that it can provide services on a wholesale basis to entities seeking to outsource functions necessary to provide voice services.

Request No. 7: In paragraph 18 of the Amended Application, Sprint states: "Indeed, Nebraska consumers will benefit from the multiple competitive supply that will result from the services described in this Application." Please fully and completely explain the "benefit" described in the above-quoted sentence, particularly in light of Sprint's declarations in paragraph 17 of the Amended Application that initially it only intends to provide "transport, switching and interconnection."

Response No. 7:
(Dr. Brian Staihr)

The "benefit" described in the above-quoted sentence is the increase in consumer and social welfare ("welfare" in the economic sense of well-being, as opposed to "charity") that derives from heterogeneous preferences being satisfied by multiple suppliers offering differentiated products that compete for the same demand in the same product space. This increase in social welfare is made possible through Sprint's function as enabler in the offering of competitive local exchange service through its provision of transport, switching, and interconnection.

Request No. 8: Do you acknowledge that all of the obligations imposed on local exchange carriers pursuant to 47 U.S.C. §251 apply to Sprint? If you do not so acknowledge, explain why not and specifically list the obligations that you contend do not apply to Sprint.

Response No. 8:
(Jim Burt)

Subject to Sprint's objection that this question is vague in that it does not define local exchange carrier, Sprint responds as follows: Sprint, the Applicant in this proceeding, is a competitive local exchange carrier ("CLEC") and accordingly is obligated to comply with all of the provisions of 47 U.S.C. §251 that apply to CLECs. Those sections that apply only to incumbent local exchange carriers do not apply to Sprint the CLEC.

Request No. 9: Please identify all facts that Sprint contends support its statement in paragraph 18 of the Amended Application that: "Granting this Application is consistent with this Commission's previous determination to adopt the pro-competitive policies of the Telecommunications Act."

Response No. 9:
(Dr. Brian Staihr)

In its Opinion and Finding dated March 10, 1997 in Application No. C-1386, this Commission stated the following:

> "This Commission finds that it should embrace and adopt the pro-competitive policies of the Federal Telecommunications Act of 1996. The Commission further finds there is a strong likelihood that certain benefits will flow from a competitive environment, such as improved efficiency in the provision of services; accelerated deployment of technological innovations; improved customer service; innovative services to meet customer needs; and choice of providers for consumers."

Sprint's function as an enabler in the offering of competitive local exchange service through its provision of transport, switching, and interconnection will help produce the very benefits described by the Commission above by helping to create, as mentioned above, additional choices of providers for customers.

Request No. 10: Please identify all facts that Sprint contends support its statement in paragraph 18 of the Amended Application that: "Further, approval of this Application will not adversely affect universal service in the service areas for which certification is granted."

Response No. 10:
(Dr. Brian Staihr)

Universal service is the condition of all customers having access to the public switched telephone network. Incumbent local telephone companies that have carrier-of-last resort status are obligated to provide this access to all customers within their serving territory. Granting Sprint's CLEC application will have no effect on any incumbent company's

obligation to provide access to the public switched network. Therefore granting Sprint's application will have no effect on universal service.

Request No. 11: Please fully explain how "Sprint will provide address based 911 and E911 service, and, when applicable, directory assistance and operator services" as stated in paragraph 18 of the Amended Application in relation to those geographic areas for which Sprint seeks certification in the Amended Application.

Response No. 11:
(Jim Burt)

Sprint will provide E911 for Time Warner Cable in the following manner:

CONFIDENTIAL/TRADE SECRET

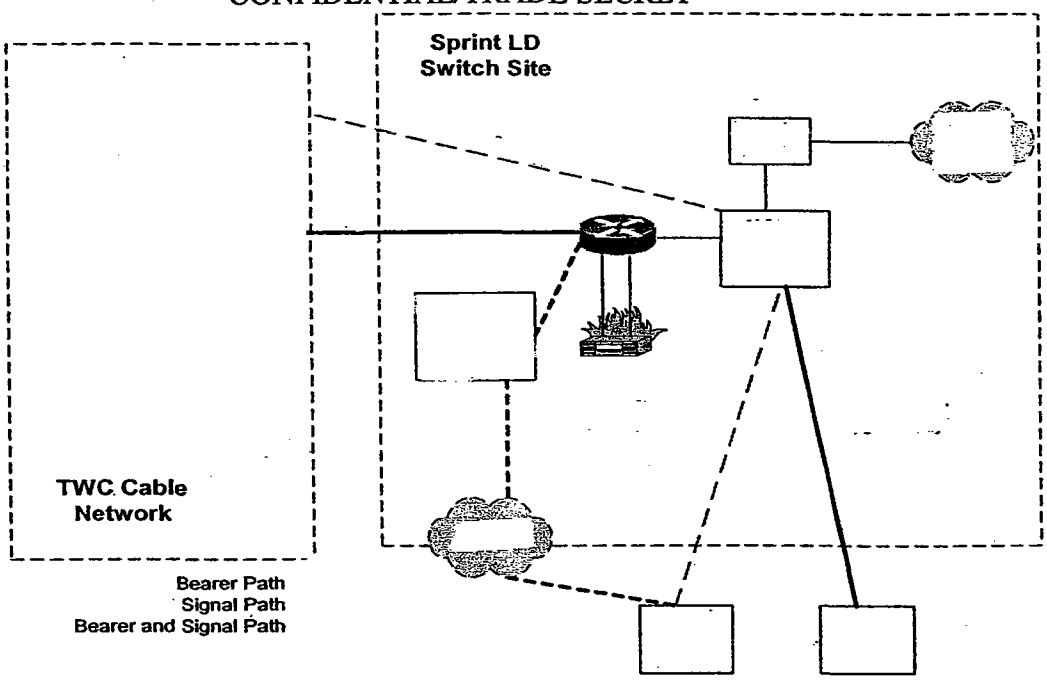

TWC E911 Call Flows
CONFIDENTIAL/TRADE SECRET

0618

CONFIDENTIAL/TRADE SECRET

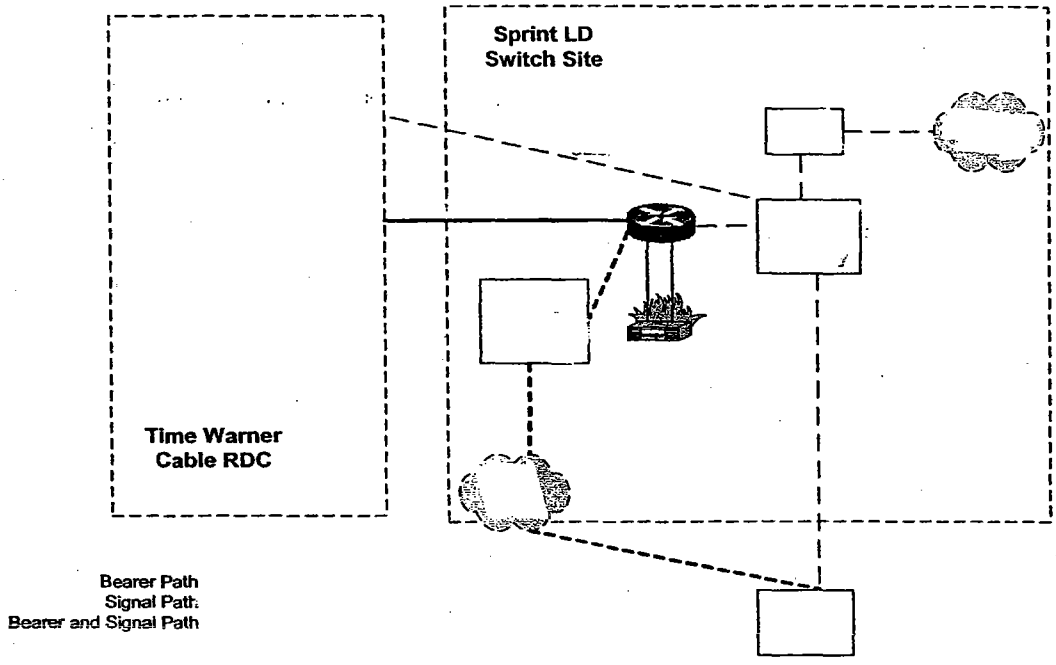

TWC OS/DA Call Flow
CONFIDENTIAL/TRADE SECRET

Request No. 12: In paragraph 20 of the Amended Application, Sprint states that it "is familiar with the laws and regulations of the Commission governing local exchange telecommunications services in Nebraska and will provide service in accordance with all laws, rules and regulations to the extent they are not preempted by the Federal Act." Identify any and all such laws or regulations that Sprint contends to be "preempted by the Federal Act."

Response No. 12:
(Jim Burt)

By making this statement, Sprint is not contending that any Nebraska law with respect to local exchange service is preempted. Sprint is merely reserving its right to the extent any Nebraska laws and regulations are preempted to respond accordingly. Sprint intends to comply with all applicable laws, rules and regulations.

0619

Request No. 13: Please state with specificity whether and how grant of Sprint's application will preserve and advance universal service; will protect the public safety and welfare; will ensure the continuous quality of telecommunications services within the territory for which Sprint seeks certification; and will safeguard the rights of consumers.

Response No. 13:
(Dr. Brian Staihr)

Granting Sprint's application will "preserve" universal service in that it will have no detrimental effect on universal service (see response to number 10 above). Granting Sprint's application will "advance" universal service in that it will enhance universal service by providing customers with choices they may not have had up to this time. In doing so, customers whose preferences may not have been met under the status quo may take advantage of alternative providers to satisfy those preferences, thereby receiving an increase in consumer welfare. Granting Sprint's application will protect the public safety and welfare by enabling the provision of inter-modal local exchange service which has the potential to provide a useful level of redundancy should problems occur with an incumbent's local network. Granting Sprint's application will ensure the continuous quality of telecommunications services through the mechanisms described in the quote from the Commission above, which stated that competition in the provision of local exchange service is likely to produce the following benefits: improved efficiency in the provision of services; accelerated deployment of technological innovations; improved customer service; and innovative services to meet customer needs. Lastly, granting Sprint's application will safeguard the rights of consumers by helping to move toward a market environment where consumers are not captive to monopoly providers and thereby at less risk of experiencing potential opportunistic behavior on the part of the monopoly provider.

Dated: September 21, 2004.

Respectfully submitted,

SPRINT

Monica M. Barone
Senior Attorney
Mail Stop KSOPHN0212-2A203
6450 Sprint Parkway
Overland Park, Kansas 66251
Voice: (913) 315-9134
Fax: (913) 523-2738
monica.barone@mail.sprint.com

CONFIDENTIAL EXHIBIT A

WHOLESALE AGREEMENT BETWEEN SPRINT AND TIME WARNER

BEFORE THE NEBRASKA PUBLIC SERVICE COMMISSION

In the Matter of Application of Sprint Communications Company L.P. for an Amendment to its Certificate of Public Convenience and Necessity to Provide Local Exchange Telecommunications Service in all Exchanges within the State of Nebraska in which Sprint is not Currently Certified to Provide Local Exchange Service	)	Application No. C-3204

TESTIMONY

OF

JAMES R. BURT

ON BEHALF OF

SPRINT

October 1, 2004

Exhibit
8
Sm 8-18-05

1 **Q.** Please state your name and address.

2

3 A. My name is James R. Burt. My business address is 6450 Sprint Parkway,

4 Overland Park, Kansas 66251.

5

6 **Q. By whom are you employed and in what capacity?**

7 A. I am employed as Director - Regulatory Policy for Sprint Corporation. I am

8 testifying in this proceeding on behalf of Sprint Communications Company L.P.

9 (Sprint).

10

11 **Q. Please provide your educational and work background.**

12 A. I received a Bachelor of Science degree in Electronics Engineering from the

13 University of South Dakota in 1980 and a Masters in Business Administration

14 from Rockhurst College in 1989.

15

16 I became Director – Regulatory Policy in February of 2001. I am responsible for

17 developing state and federal regulatory policy and legislative policy for Sprint

18 Corporation, including the coordination of regulatory and legislative policies

19 across the various Sprint business units and the advocacy of such policies before

20 regulatory and legislative bodies.

21

22 From 1997 to February of 2001, I was Director-Local Market Planning. I was

23 responsible for policy and regulatory position development and advocacy from a

24 CLEC perspective. In addition, I supported Interconnection Agreement

negotiations and had responsibility for various other regulatory issues pertaining to Sprint's CLEC efforts.

From 1996 to 1997, I was Local Market Director responsible for Sprint's Interconnection Agreement negotiations with BellSouth.

I was Director – Carrier Markets for Sprint's Local Telecom Division from 1994 to 1996. My responsibilities included inter-exchange carrier account management and management of one of Sprint's Inter-exchange Carrier service centers.

From 1991 to 1994, I was General Manager of United Telephone Long Distance, a long distance subsidiary of Sprint/United Telephone Company. I had Profit and Loss ("P&L"), marketing and operations responsibilities.

From 1989 to 1991, I held the position of Network Sales Manager responsible for sales of business data and network solutions within Sprint's Local Telecom Division.

From 1988 to 1989, I functioned as the Product Manager for data and network services also for Sprint's Local Telecom Division.

Prior to Sprint I worked for Ericsson Inc. for eight years with positions in both engineering and marketing.

1 **Q. Have you testified previously before state regulatory commissions?**

2 A. Yes. I have testified in Georgia, Louisiana, Pennsylvania, Maryland, Illinois and
3 Iowa and have supported the development of testimony in many other states.

4

5 **Q. What is the purpose of your testimony?**

6 A. The purpose of my testimony is to support Sprint's application to amend its
7 certificate of public convenience and necessity to provide local exchange
8 telecommunications service in all exchanges within the State of Nebraska in
9 which Sprint is not currently certified. My testimony will address Sprint's
10 financial, technical and managerial qualifications. Additionally, I will describe
11 the relationship between Sprint and Time Warner Cable Information Services,
12 LLC. Sprint witness, Dr. Brian Staihr, will address the public interest aspect of
13 Sprint's certification application.

14

15 **Q. Why is Sprint seeking to expand its certificate of public convenience and**
16 **necessity to include all exchanges within the State of Nebraska in which**
17 **Sprint is not currently certified?**

18 A. Sprint is seeking to amend its certificate of public convenience and necessity for
19 two reasons. First, to provide local interconnection, transport and switching
20 services in support of Time Warner Cable Information Services, LLC's (TWCIS)
21 local and long distance voice service market entry. In order to provide these
22 services, Sprint will be entering into local interconnection agreements with
23 Nebraska incumbent local exchange carriers (ILECs). Although the Code of

Federal Regulations says otherwise, some ILECs will refuse or are reluctant to negotiate an interconnection agreement if the requesting carrier is not certified.[1] Second, Sprint constantly evaluates local market entry alternatives and state-wide certification facilitates and shortens market entry intervals. The combination of dynamic market entry planning and the sometimes protracted certification proceedings suggests it's in Sprint's best interest to be certified on a state-wide basis.

Q. Why doesn't Sprint limit its certification amendment consistent with its commitment to TWCIS?

A. There are several reasons why it is necessary for Sprint to receive certification throughout the State of Nebraska. First, as stated above, Sprint is constantly evaluating local market entry alternatives and state-wide certification is most appealing and provides efficiencies to that ongoing effort. Second, since Sprint submitted its application to amend its certificate of public convenience and necessity on July 16, 2004 it has entered into an agreement with another cable company intending to provide service in Nebraska. Sprint is in various stages of negotiations with several cable companies and timely market entry is important to all of them, therefore, having state-wide certification is important to meeting this goal. Third, it is most efficient for all parties and the Nebraska Public Service Commission to address the issues relevant to Sprint's certification expansion one

[1] 47 CFR §51.301(4)

time rather than several times. Finally, Sprint is seeking the same authority previously granted to over 50 companies in the State of Nebraska.[2]

Q. Is state-wide certification the only thing Sprint needs to support its cable company commitments or potential Sprint plans?

A. No. Certification is only one of the requirements. There are other steps Sprint must take. Sprint must negotiate and possibly arbitrate interconnection agreements with ILECs. Each agreement must be approved by the Nebraska Commission before Sprint can actually provide service. Sprint must submit a bona fide request for interconnection with rural ILECs for which the Commission must determine whether the rural exemption created by the Federal Telecommunications Act of 1996 should be lifted.

Q. Should the rural exemption issue be considered as a part of this proceeding?

A. No. This proceeding should focus on Sprint's financial, managerial and technical qualifications as well as the public interest. This is consistent with previous Commission orders pertaining to state-wide certification.[3]

Q. Does Sprint have sufficient financial resources to provide the proposed services?

A. Yes. Sprint's most recent Form 10-K documents show combined revenue of over $26 Billion and operating income of almost $900 Million.[4]

---

[2] http://www.psc.state.ne.us/home/NPSC/communication/CLEC_list.htm

1

2 **Q. Does Sprint have sufficient technical and managerial competency to provide**

3 **the proposed services?**

4 A. Yes. Sprint is a global communications company and a leader in integrating long-

5 distance, local service, and wireless communications. Sprint is the nation's third–

6 largest provider of long distance services based on revenues, and operates a

7 nationwide, all-digital long distance networks using fiber optic and electronic

8 technology. Sprint currently serves approximately 7.9 million access lines within

9 its franchise territories in 18 states, and provides local service using its own

10 facilities, leased facilities or unbundled network elements provided by other

11 carriers in 36 states and the District of Columbia. Sprint is serving the cable

12 telephony market through arrangements with cable companies that resell Sprint

13 long distance service and use Sprint's back office systems and network assets in

14 support of their local telephone service provided over cable facilities. Sprint also

15 operates a 100% digital personal communications service, or PCS, wireless

16 network with licenses to provide service to the entire United States population,

17 including Puerto Rico and the U.S. Virgin Islands. The PCS Group, together with

18 third party affiliates, operates PCS systems in over 300 metropolitan markets,

19 including the 100 largest U.S. metropolitan areas. The PCS Group, combined

20 with our wholesale and affiliate partners, served more than 20 million customers

21 at the end of 2003.[5]

---

[3] Several examples are available on the Nebraska Public Service Commission web site. The most recent being Application No. C-3050 of Qwest Corporation granted May 4, 2004.
[4] Sprint Form 10-K for fiscal year ended December 31, 2003.
[5] Sprint Form 10-K for fiscal year ended December 31, 2003.

1 **Q. Are Sprint's managerial, financial and technical capabilities the same as**
2 **when Sprint was granted a certificate of public convenience and necessity on**
3 **March 10, 1997 in Application No C-1386?**
4 A. Yes, Sprint's managerial, financial and technical capabilities are essentially
5 equivalent, if not better, compared to what they were in 1997 when Sprint was
6 granted a certificate of public convenience and necessity to provide service.
7
8 **Q. Please describe the relationship between Sprint and TWCIS.**
9 A. Sprint leverages its vast network, managerial and technical capabilities in both the
10 retail and wholesale market segments. Wholesale service has always been a
11 significant segment to Sprint. This is represented by Sprint's success in both
12 wireline and wireless services. Sprint is now leveraging its wholesale expertise
13 and success to the cable segment. Virtually all cable companies want to provide
14 local and long distance service and Sprint has seen considerable success
15 partnering with the cable companies.
16
17 The relationship between Sprint and TWCIS is quite simple. TWCIS is the retail
18 provider of local and long distance. TWCIS will provide end-user billing,
19 marketing and sales. customer service and customer access. Sprint provides
20 wholesale services that enables the TWCIS retail service. These services include
21 PSTN interconnectivity, long distance service, operator and directory assistance
22 service, 911 connectivity and number administration.
23

1 **Q. Does the wholesale/retail relationship used by Sprint and its cable partners**
2 **create any problems relative to a business model where the same entity**
3 **provides the retail and the wholesale services described above?**
4 A. No, the wholesale/retail relationship described is effectively the same as a
5 business model where the same entity provides both the retail and wholesale
6 services. The retail/wholesale model Sprint and the cable companies are using
7 isolate all of the retail relationships and functions with the cable company. The
8 inter-carrier relationships and functions are provided by Sprint. This is important
9 because, for all practical purposes, the retail and inter-carrier relationships are
10 isolated from one another. By that I mean the retail relationship between a
11 service provider and an end user does not have visibility or interaction with the
12 functions that are performed between carriers. For example, when a cable
13 company is marketing or selling its service, providing customer service or end-
14 user billing, there is no visibility from the standpoint of the end-user to the inter-
15 carrier functions being performed such as interconnection, number porting, etc.
16 An example of where two different entities combine their efforts to provide an
17 end-user service is operator services. Until very recently, United Telephone
18 Company of the West provided retail operator services to its end-users through a
19 contractual relationship with another carrier that actually provides the operator
20 services. Furthermore, Sprint and TWCIS are operating under this
21 retail/wholesale model in numerous states today serving thousands of customers.

1 **Q. Please summarize your testimony.**

2 A. Sprint has demonstrated that it has the managerial, technical and financial
3 capabilities consistent with Commission requirements. In fact, they are
4 essentially the same as when this Commission granted Sprint's current certificate
5 of public convenience and necessity in 1997. Sprint's application is also
6 consistent with the public interest standard used by the Commission as
7 demonstrated by Dr. Brian Staihr. These four criteria have been used repeatedly
8 in determining whether an entity qualifies for and is granted a state-wide
9 certificate. Accordingly, Sprint requests the Commission to grant its request to
10 amend its certificate consistent with criteria used previously by the Commission.

11

12 **Q. Does that conclude your testimony?**

13 A. Yes.

STATE OF KANSAS)
)ss:
COUNTY OF JOHNSON)

I, James R. Burt, being first duly sworn state that I have prepared the foregoing written testimony on behalf of Sprint.

Jim Burt

James R. Burt

Subscribed and sworn to before me this 30th day of September, 2004.

Mary Joshi

Notary Public

My Commission Expires:

March 5, 2005

NOTARY PUBLIC – State of Kansas
MARY K. JOSHI
My Appt. Exp. 3-5-05

Exhibit
10
Lm 8-11-05

1 P R O C E E D I N G S

2 Morning Session -- November 4, 2004

3 COMR. LANDIS: We will go on the record. The
4 application in Docket C-3204 will come to order. I
5 am Frank Landis, and I will be the hearing examiner
6 this morning. Joining me on the bench, to my left,
7 is the Commission chairman, Commissioner Jerry Vap.
8 To my right is Commissioner Lowell Johnson. Our
9 court reporter is Susan Lamborn. At the counsel
10 table is our staff counsel who is handling this
11 particular docket, Angela Melton. On May 11, 2004,
12 Sprint filed an application to expand its CLEC
13 authority to all exchanges within Nebraska in which
14 it was not currently certificated. Notice of the
15 application was published in the Daily Record, Omaha,
16 Nebraska, on May 18, 2004. A copy of that notice
17 will become Exhibit 1.

18 (Commission Exhibit Number 1, having been
19 duly identified, was received in evidence. See Supp.
20 Volume) 0633

21 Petitions for formal intervention were filed
22 on June 9, 2004, on behalf of Benkelman Telephone
23 Company, Arapahoe Telephone Company, Cozad Telephone
24 Company, Curtis, Diller, Glenwood Telephone and
25 Membership Corporation, Keystone-Arthur Telephone

1 Company, Plainview, Wauneta, Hartman, and Mainstay
2 Telephone Companies and Mainstay Communications. A
3 petition for formal intervention was also filed on
4 behalf of Southeast Nebraska Telephone Company on
5 June 15, 2004. In response to a Motion to Dismiss
6 filed on June 29, 2004, Sprint filed an amended
7 application on July 19, 2004. A copy of the amended
8 application will be made Commission Exhibit Number 2.
9 (Commission Exhibit Number 2 was marked for
10 identification)
11 MR. SCHUDEL: May I interrupt just a moment?
12 There isn't any implication by that marking of
13 Exhibit 2 that is being received in evidence, is
14 there, because I have argument to make on that if
15 that is your intent. Marking is fine obviously.
16 COMR. LANDIS: It is being -- I guess this is
17 going to be offered by the Commission as Exhibit 2
18 but you can certainly question whether or not it will
19 be admitted. I am just noting now. We will just
20 mark it as Exhibit 2, and you can raise it, and you
21 will be making the offer. Okay? This matter was set
22 for hearing. We entered a prehearing conference
23 order on August 23, 2004. Copies of the order were
24 mailed to all parties on August 23, 2004. We will
25 make a copy of that order Exhibit 3 here. Any

1 objection to admitting a copy of the prehearing
2 conference order at this point? Okay. That will be
3 admitted into evidence here.
4 MR. SCHUDEL: Which exhibit was that?
5 COMR. LANDIS: That was Exhibit 3 and that
6 was the copy of the prehearing conference order.
7 (Commission Exhibit Number 3, having been
8 duly identified, was received in evidence. See Supp.
9 Volume)
10 At this time, then, we are going to take
11 appearances; first, on behalf of the applicant, and
12 then on behalf of the interveners and finally on
13 behalf of the staff. So, on behalf of the applicant.
14 MR. KISTLER: Commissioner, let the record
15 show the appearance of Bradford Kistler appearing on
16 behalf of the applicant, Sprint Communications
17 Company LLC. I am an attorney admitted to practice
18 before the Supreme Court of the state of Nebraska and
19 again representing the applicant, Sprint. Also, at
20 this time, I would like to introduce to the
21 Commission Monica Barone. Ms. Barone is an attorney
22 admitted to practice before the Supreme Courts of the
23 states of Florida and North Carolina in good
24 standing. I move her appearance for purposes of this
25 brief proceeding at this time.

1 COMR. LANDIS: Okay. That will be granted.
2 MS. BARONE: Good morning.
3 (Applicant Exhibits Number 4 and 5 were
4 marked for identification)
5 COMR. LANDIS: Good morning. Mr. Schudel?
6 MR. SCHUDEL: Mr. Commissioner, appearing on
7 behalf of Southeast Nebraska Telephone Company, my
8 name is Paul Schudel. With me is Jim Overcash. We
9 are members of the Woods and Aitken Law Firm. Our
10 address is Suite 500, 301 S. 13th Street, Lincoln,
11 Nebraska 68508.
12 COMR. LANDIS: Thank you, Mr. Schudel.
13 MR. FAHLESON: Mark Fahleson. With me today
14 is also Troy Kirk with the law firm of Rembolt
15 Luedtke, 1201 Lincoln Mall, Suite 102, Lincoln,
16 Nebraska 68508. Entering an appearance on behalf of
17 formal interveners, Arapahoe, Benkelman, Cozad,
18 Curtis, Diller, Glenwood, Hartman, Hopper, Keystone-
19 Arthur, Mainstay, Plainview and Wauneta Telephone
20 Companies.
21 COMR. LANDIS: Thank you, Mr. Fahleson.
22 MS. MELTON: Angela Melton on behalf of the
23 Commission staff. 0636
24 COMR. LANDIS: Ms. Melton, thank you. All
25 right. Well, let us take -- Mr. Schudel, you want to

1 be heard on Exhibit 2. Let us take that up first.
2 MR. SCHUDEL: All right. First of all, am I
3 to understand that the staff is offering that
4 exhibit?
5 COMR. LANDIS: Well, according to my -- this
6 is a Commission exhibit, and I assume from that, that
7 we are making the offer.
8 MS. MELTON: Yes, sir.
9 COMR. LANDIS: It is just like when we enter
10 the notices, a Daily Record notice. We do that as
11 part of our routine. We don't expect the parties to
12 do that.
13 MR. SCHUDEL: And, they aren't substantive
14 evidence, but, first of all, I would object to the
15 offer by the Commission staff or the Commission of
16 the application. Secondly, Ms. Barone has invoked
17 and the Commission in its order that was entered on
18 November 1 has approved the application of the rules
19 of evidence to this matter. That, in all due
20 respect, is going to change the tenure of this
21 application considerably. Several basis on which the
22 receipt of the application is objectionable. First
23 of all, the application has been purportedly verified
24 by an individual who is a member, according to the
25 verification, who is a general attorney representing

1 Sprint Communications named Kenneth Schiffman. Mr.
2 Schiffman has not been identified as a witness for
3 the proceeding this morning nor do I understand that
4 he has been designated as a witness. Therefore, any
5 contents of the application are clearly hearsay and
6 lack proper and sufficient foundation. I have no
7 opportunity to cross-examine Mr. Schiffman. In
8 addition to that, Exhibit A to the application
9 purposes to be the notice of the 2004 annual meeting
10 proxy statement and 2003 Form 10K of the parent
11 corporation to Sprint Corporation. Nothing in the
12 prefiled testimony of the two exhibits that was filed
13 on October 1 made any reference to this. They don't
14 sponsor this exhibit. Clearly, that also is hearsay.
15 It is without proper and sufficient foundation.
16 Exhibit B purports to be the Form 10K of Sprint
17 Corporation, not the applicant in this matter.
18 Similarly, there is no foundation laid for the
19 information including the financial information
20 contained in that exhibit. It constitutes hearsay
21 and is without proper and sufficient foundation.
22 Exhibit C purports to be a list of officers and their
23 resumes of Sprint Corporation. Similarly, there is
24 no proper and sufficient foundation. That
25 information is hearsay. Exhibit E purports to be

1 copies of two applications entered by this Commission
2 in 1986 for an entity called US Sprint Communications
3 Company pertaining to interexchange authorization.
4 The application C-497 does not even -- well, it named
5 GTE Sprint Communications Corporation. That was
6 entered in 1985. Applications that are respectively
7 16 and almost 20 years old have no bearing upon this
8 matter. They lack proper and sufficient foundation.
9 They are also irrelevant to this matter. On that
10 basis, on behalf of Southeast Nebraska, we would
11 object to the receipt of the application and all of
12 the exhibits that I have identified. One final
13 matter, in the prehearing conference order that has
14 been received in evidence as Exhibit 3, the parties
15 were directed, and Sprint is particularly directed to
16 serve all parties and file with the Commission all
17 prefiled testimony and exhibits on or before October
18 1. I have copies of Ms. Barone's letter to Mr.
19 Pollock dated October 1, 2004, and her e-mail to the
20 parties also dated October 1, 2004, which I would ask
21 to be marked as Exhibit 6. As we will be seeing from
22 those communications, there was no identification --
23 MS. BARONE: Commissioner Landis, do we have
24 copies so that I may review those, please?
25 COMR. LANDIS: He will in a moment. Just

1 going to get them marked. You say that would be
2 Exhibit 6? Okay.
3 (Intervener Exhibit Number 6 was marked for
4 identification)
5 MR. SCHUDEL: Exhibit 6 simply is offered to
6 demonstrate that Ms. Barone prefiled only two items
7 in this case that have been, I am told, marked as
8 Exhibits 4 and 5 respectively. The Burt prefiled
9 testimony and the Staihr testimony. As such, she
10 failed to comply with the terms of the prehearing
11 conference order with regard to identifying and
12 filing exhibits which was mandated which obviously,
13 Commissioner Landis, you will recall as well as
14 counsel for the Commission, and, Ms. Barone, was the
15 intent of the order you entered on August 23, 2004,
16 marked as Exhibit 3 in this matter.
17 MR. FAHLESON: On behalf of our formal
18 interveners, we have joined in the objection and I
19 would cite to the Commission Chalupa vs. Hartford
20 Fire Insurance Company, 217 Neb. 662. Again, in
21 order for these records -- many of these records to
22 overcome a hearsay objection, there are a number of
23 hoops that have to be jumped through among which
24 includes having the testimony of the custodian to
25 testify and certify that the documents are authentic.

1 That person I do not believe, based upon reading the
2 prefiled testimony, that person is not present here
3 today. We would object on hearsay, foundation, as
4 well as authenticity.
5 COMR. LANDIS: Do you want to be heard on
6 this, Angela?
7 MS. MELTON: No. I think it is more
8 appropriate for Ms. Barone.
9 COMR. LANDIS: All right. Do you want to be
10 heard, Ms. Barone?
11 MS. BARONE: Yes, Commissioner Landis. I
12 planned on putting our witness, Mr. Burt, who is
13 going to be able to authenticate these documents. We
14 will go through that foundation process when we put
15 him on.
16 COMR. LANDIS: With respect to the
17 application?
18 MS. BARONE: Yes. With regard to the
19 application, in terms of the prehearing order, all
20 parties were served with the application which is
21 what triggered this proceeding in the first place.
22 As you can tell, this is very thick, and I think it
23 would be harmless to -- harmless error to allow this
24 to be identified as an exhibit at this point. It was
25 not our intention to disregard the prehearing

1 officer's order in any regard. We have endeavored to
2 follow that order every step of the way.
3 MR. SCHUDEL: It is, in fact, prejudicial
4 error and it is clearly not in compliance with that
5 prehearing order which you have rigorously enforced
6 and other matters in which you made clear at the
7 prehearing conference that any exhibits and any
8 testimony to be offered in this matter had to be
9 premarked and prefiled and therefore she simply
10 didn't comply with that.
11 MS. BARONE: Commissioner Landis, if you will
12 recall, I had to point out counsel's error as well
13 when they identified all the exhibits that were the
14 subject of Sprint's Motion in Limine. They never
15 served Sprint with any of those exhibits. So, they,
16 too, did not follow every single point of the
17 prehearing officer's order.
18 COMR. LANDIS: Well, I am going to reserve on
19 admitting the amended application. I think we will
20 just go ahead and give -- go on with the hearing. We
21 will treat that -- if not before the conclusion of
22 the hearing in the order that we will eventually
23 enter, but it is noted. I am going to reserve. Let
24 us move ahead, then. So, you may call your first
25 witness.

1 MS. BARONE: Thank you, Commissioner Landis.
2 I will call Jim Burt.
3 (Ms. Burt was sworn in by Commissioner
4 Landis)
5 COMR. LANDIS: Very well, sir. If you will
6 be seated, state your name, and spell it for the
7 court reporter.
8 MR. BURT: My name is James R. Burt,
9 J-a-m-e-s B-u-r-t.
10

1 JAMES BURT

2 Testifies as follows on:

3 DIRECT EXAMINATION

4 By Ms. Barone:

5 Q Mr. Burt, again, would you state your full

6 name for the record?

7 A James R. Burt.

8 Q By whom are you employed and in what

9 capacity?

10 A I am employed by Sprint Corporation as

11 Director of Regulatory Policy.

12 Q Mr. Burt, I believe your testimony has been

13 pre-marked as Exhibit Number 4. Do you have any

14 corrections to your testimony?

15 A No, I don't.

16 Q If I were to ask you the questions contained

17 in the prefiled testimony today, would your answers

18 be the same?

19 A Yes, they would.

20 MS. BARONE: Commissioner Landis, I would ask

21 that Exhibit Number 4 be offered into evidence and

22 accepted at this time.

23 MR. SCHUDEL: I have several objections. I

24 prepared a memorandum without -- 0644

25 MS. BARONE: Commissioner Landis, may I

1 impose an objection at this time?

2 COMR. LANDIS: I am sorry. I didn't --

3 MS. BARONE: May I interpose an objection at

4 this time? It looks like we are going to have a long

5 hearing and I would like to go ahead and interpose an

6 objection right now.

7 COMR. LANDIS: Well, I think we have got -- I

8 think we have an objection pending. Let us hear

9 that, and then we will move to you.

10 MS. BARONE: Okay.

11 MR. SCHUDEL: I have endeavored to assist the

12 Commission in its evaluation of the testimony that is

13 being offered by making a list of those portions of

14 the testimony to which Southeast Nebraska objects.

15 The legal basis for the objection, again, I emphasize

16 that Ms. Barone chose to invoke the strict rules of

17 evidence. Southeast would have been perfectly

18 willing to go forward without that, but having

19 invoked them, it is not only my duty but it is

20 required to go ahead and subject this proffered

21 testimony to those rules. If I may first direct your

22 attention to Page 3, starting at Line 23 and

23 continuing on Page 4 --

24 MS. BARONE: May I interpose my objection

25 now?

1 COMR. LANDIS: No, I want to hear him, and
2 then you will be afforded an opportunity.
3 MR. SCHUDEL: Page 4, Line 2, Mr. Burt
4 purports to make citation to the federal regulations.
5 At that point, I will not read this because obviously
6 I do not wish to have it as part of the record. That
7 is the nature of my objection to these statements set
8 forth on those lines, lack proper and sufficient
9 foundation. They are speculative and they are
10 irrelevant to the matters at issue before this
11 Commission. I am certainly prepared to give you the
12 rules of evidence citations if you wish to support
13 each of those. Now, would you wish to have me pause
14 and you want to hear Ms. Barone's comments and others
15 comments?
16 COMR. LANDIS: I suspect the remainder of
17 these are similar to what you just argued here. Each
18 have different basis for your objections. Let us go
19 ahead --
20 MR. FAHLESON: If I can be brief, we would
21 join in the objection and add to it Pages 5 and 6,
22 references to Footnotes 2, 3, 4, 5 to the extent.
23 There are references to hearsay information for which
24 there is not proper foundation or authenticity.
25 MR. SCHUDEL: And, again, by pausing, I am

1 not suggesting that I have made my comments with
2 regard to the objections that followed the first, but
3 if you wish to take these seriatim, that is certainly
4 fine with me.
5 COMR. LANDIS: Let us hear from Ms. Barone at
6 this point.
7 MS. BARONE: Yes, Commissioner Landis. I
8 would just like to interpose one objection at this
9 time. When I looked at the petition for formal
10 intervention of Southeast Nebraska Telephone Company,
11 the intervention -- first of all, I note that they
12 did not protest or file a protest to Sprint's
13 application which is, under your rules, a waiver of
14 opposition to the application. However, as an
15 intervener under your rules, they have an opportunity
16 to cross-examine on those interests or on the
17 specific interests identified in the petition to
18 intervene. In the petition to intervene, Southeast
19 Nebraska Telephone states that it has an interest in
20 assuring that the application is complying with all
21 applicable laws, rules, and regulations. As you
22 recall, I believe that is in reference to the
23 original petition that was filed, and, of course,
24 Sprint did amend its application. That objection was
25 rendered moot. So, in terms of cross-examination or

1 the ability of SENTCO to participate in this
2 proceeding, I believe that it should be limited only
3 to those issues that deal with the applicability --
4 that the application is compliant with the
5 Commission's rules. In that way, we perhaps will
6 narrow the scope of this proceeding to only those
7 interests that have been specifically identified.
8 Thank you.
9 COMR. LANDIS: Do you want to be heard on Mr.
10 Schudel's objection to specific parts of the --
11 MS. BARONE: I will have to look at each of
12 these.
13 COMR. LANDIS: As will I. I am not able to
14 rule on this at this time without being given some
15 time to read the testimony. We are going to proceed.
16 Mr. Schudel is very specific in the areas of
17 testimony you have objection to, and the basis.
18 MR. SCHUDEL: I am, and let me just say as a
19 matter of practicality, if the hearing officer does
20 not rule on these, it will be virtually impossible to
21 conduct this cross-examination. For example, if you
22 were to sustain my objection, obviously I am not 0648
23 going to be interrogating this witness on any of the
24 portions that are not received. So, you put me in a
25 position of having no basis of knowing how to proceed

1 here. Again, it would have been our desire to go
2 forward in your normal, administrative fashion as you
3 have done always before, literally always before for
4 a CLEC application. Unfortunately, this puts you in
5 the position of needing to rule on these. Therefore,
6 we can be guided as to how we proceed with our
7 interrogation. That is why I endeavored to put this
8 list together so you wouldn't have to react to verbal
9 presentation so that you could go through this. I
10 don't know how to do it other than to take the time
11 to argue out each of these to ask you for a ruling.
12 Obviously, I can't force that, but I don't know how
13 else to run this hearing without that happening.
14 MS. BARONE: Commissioner Landis, a couple of
15 these items, in particular the footnote to the
16 Commission's web site and the orders contained
17 therein. That is merely a reference to the
18 Commission's orders of which the Commission can take
19 administrative notice. With regard to -- yes,
20 counsel has made specific objections but as I
21 understand it, under the rules of evidence in
22 Nebraska, you can make these statements, but then you
23 must given specific reasons why they lack foundation
24 and why they are hearsay. Then, I would need an
25 opportunity to respond to each one of those.

1 COMR. LANDIS: I will tell you how we are
2 going to handle this. We have got the objections
3 here. I am going to reserve on these. We are going
4 to take the testimony as if I denied your objections.
5 So, the ground rules are as if I denied it. Given
6 some time, our staff attorney and myself and my other
7 Commissioners will sit down and look at the evidence,
8 look at the objections. To the extent that we think
9 testimony should be excluded, Mr. Burt's testimony or
10 your other witness, we will go back and strike that,
11 take it out of the record. Then, what is left in the
12 record, we will then use on which we will base our
13 decision. But, for purposes of conducting the
14 hearing today and getting through our business, I
15 will reserve on this and you will ask questions, Mr.
16 Schudel, as if I have denied this. So, you make a
17 complete record, get everything in that you want to
18 get in -- I expect full cross-examination. At the
19 end of the day, then, we will look at the objection,
20 we will look at the testimony, and we will go through
21 and strike, but -- shouldn't be there.
22 MS. BARONE: Will I have an opportunity to
23 respond?
24 COMR. LANDIS: To what I have just announced
25 here --

1 MS. BARONE: To the striking or what the
2 Commission will propose to strike from the record or
3 do I need to do that now? Do I need to take a few
4 minutes and go and take a look at this to get my
5 objections on the record?
6 MR. SCHUDEL: I don't follow this taking a
7 few minutes. We walk in here and we start to present
8 our cases. If we were at District Court, there
9 wouldn't be taking a recess, give me a few minutes to
10 figure this thing out, and we will be back. This is
11 what she asked for. Now, this is what she needs to
12 live with.
13 COMR. LANDIS: Okay. We are going to proceed
14 on the basis that I have just announced. We are
15 going to go ahead. We are going to take this man's
16 testimony. You cross-examine as if I have denied the
17 motion, develop whatever information you feel you
18 need, and we are going to move ahead with our
19 business today.
20 MR. FAHLESON: I would just like to note a
21 continuing objection for the record for proceeding
22 that route. Again, I don't believe you can un-ring a
23 bell, so, once the information is in the record, I
24 believe that there is prejudice to the trier of fact,
25 and do not waive any rights with respect to the

1 objections by proceeding.

2 COMR. LANDIS: That is fine. I think that

3 needs to be in the record, and it is.

4 MR. SCHUDEL: I guess I just need to -- at

5 this point, since I had only verbalized one of these

6 objections. For the record, I would make the

7 objections to Mr. Burt's prefiled testimony as appear

8 on -- I don't know if you want this to be now an

9 exhibit or do you want me to verbalize what those

10 objections are for the record.

11 COMR. LANDIS: I think we will take it as an

12 exhibit. I want it in our hands at the end of the

13 day.

14 MR. KISTLER: The concern here is that

15 because these objections are made, at some point, Ms.

16 Barone needs the opportunity to respond specifically

17 to each objection so that you have her arguments in

18 mind as well as Mr. Schudel's arguments in mind when

19 you consider his objections. I don't know as she has

20 had that opportunity yet.

21 MS. MELTON: Commissioner Landis, may I make

22 a suggestion?

23 COMR. LANDIS: Sure.

24 MS. MELTON: That we go through this

25 testimony verbally and Mr. Schudel can make his

1 objections at the time that we reach those sections
2 so that Ms. Barone would have an opportunity to
3 respond as you would in a normal proceeding?
4 COMR. LANDIS: As the attorney handling the
5 case, that sounds fine. We will go -- you just take
6 him through the testimony, raise the objections, and
7 then we will either rule at that time and both
8 parties can be heard on it or we will reserve and
9 strike. I think that probably makes more sense than
10 taking everything and then sorting it out by
11 ourselves. It will take a little more time, but that
12 is fine. That is what we are here for today.
13 MS. BARONE: Thank you.
14 COMR. LANDIS: Now, does anybody want to be
15 heard on Ms. Melton's suggestion which I think makes
16 good sense? Just go ahead and ask the questions,
17 pose your objections. You be heard on them, and if I
18 am not inclined to rule at that time, we will take it
19 in, and if I decide at some point it should be
20 stricken, we will strike it. 0653
21 MR. SCHUDEL: To be clear, am I correct in
22 understanding that pursuant to the prehearing
23 conference order, that this witness' direct testimony
24 is confined to what has been marked as Exhibit 4 and
25 we are not allowing an extension of that beyond this

1 per Ms. Melton's suggested procedure?

2 MS. BARONE: I have not finished my direct on

3 that, so, I would suggest that if could wait to after

4 I finish my direct. We are going to be discussing

5 the application next, so, it is not confined to just

6 that.

7 MR. SCHUDEL: The point is what I said

8 earlier. Your prehearing conference order required

9 prefiled direct testimony. It doesn't say profile

10 part of it and when it comes time for the hearing,

11 you can supplement it. So, that is the nature of my

12 question. Are we starting down the road of, well,

13 here is what is prefiled, but now I have got another

14 question I thought of, so, I am going to ask that. I

15 object to that, and I am simply trying to get a clear

16 understanding with -- proceeding with Ms. Melton's

17 procedure which I don't object to, but that ought to

18 be confined to the four corners of this prefiled

19 testimony as well as Dr. Staihr's testimony.

20 MS. BARONE: May I finish? I am not sure I

21 understand the objection. Mr. Burt's testimony was

22 filed in support of the application which I am about

23 to ask him to -- I am going to lay the foundation for

24 that to be offered into evidence.

25 MR. SCHUDEL: We have a standing objection to

1 the application. That has been reserved on ruling.
2 There is no reason for that to be pursued at this
3 point. You reserved on that.
4 COMR. LANDIS: The reason we had the
5 prehearing conference and the reason I entered the
6 order that I did was so that everybody at the table
7 today would know what is at the table. I think since
8 inasmuch as this was what was prefiled, this is what
9 we are going to hear today, I don't think we need to
10 expand on what we have here because that is the
11 purpose of limiting and prefiling. It is not to have
12 something come up at the hearing unless it would be
13 rebuttal that we haven't already seen. So, with
14 that, we will limit to Mr. Burt's prefiled testimony.
15 In other words, what I am asking you to do is take
16 him through the testimony. When you reach a point
17 that there an objection, you pose your objection, you
18 answer the objection and it will be limited to this.
19 With respect to the application, we have reserved on
20 that, and we will decide whether or not that should
21 be admitted into evidence or not. 0655
22 MS. BARONE: At this point, I would like to
23 lay the foundation for that, for offering it as
24 Sprint's exhibit. His testimony is in support of the
25 application. I would like to do that at this time.

1 MR. SCHUDEL: That has been objected to and
2 you just ruled on it. She may like to do that but
3 you made a ruling.
4 MS. BARONE: But, counsel forgets that he
5 also did not pre-file all of the exhibits he said in
6 his response, and respond to Motion Limine or the
7 Motion in Limine was response to exhibits that he
8 identified and did not provide. Here, this is the
9 application, is what triggered this hearing. This is
10 what this hearing is about. Mr. Burt is now the
11 witness who has filed testimony in support of that
12 application and I am now going to lay the foundation
13 so that it can be our exhibit. It being our exhibit
14 is not prejudicial error. This has been available.
15 This is what this hearing is all about is this
16 application.
17 MR. SCHUDEL: If we were under administrative
18 law, that would be a correct analysis. That was
19 precisely my argument in response to the Motion in
20 Limine. That argument was overruled. You have
21 excluded my exhibits that I sought to offer on the
22 application of the strict rules. What is sauce for
23 the goose is sauce for the gander. She cannot
24 proceed under the rules of evidence. 0656
25 COMR. LANDIS: We are going to proceed and we

1 are going to proceed according to the prefiled
2 testimony. So, you just take him through this, then,
3 you pose your objections.
4 MS. BARONE: I would like to make an offer of
5 proof right now to get this on the record in case we
6 have to appeal.
7
8 By Ms. Barone:
9 Q Mr. Burt, you have before you Sprint's
10 application which has been previously marked as
11 Exhibit Number 2. Is this a true and correct copy of
12 the application that Sprint submitted in this matter?
13 A Yes, it is.
14 Q Have you reviewed the application?
15 A Yes.
16 Q Are the statements contained in the
17 application true and correct to the best of your
18 knowledge and belief?
19 A Yes, they are.
20 Q Has Sprint satisfactorily complied with all
21 the requirements for its application? Is that line
22 in Section 002.49 of Chapter 5 of the Nebraska Rules
23 and Regulations?

24 A Well --
25 MR. SCHUDEL: Again, I am not going to object

1 to any of this because it is an offer of proof. I
2 will state my objections at the close.
3 COMR. LANDIS: Okay.
4 MR. BURT: Yes.
5 MS. BARONE: Sprint offers at this point
6 Exhibit 2 into evidence.
7 MR. SCHUDEL: In the interest of not
8 prolonging these procedural issues, I would simply
9 restate for the record all of my objections to the
10 application and to this offer of proof that I earlier
11 stated as my objections to the application, Mr.
12 Hearing Officer.
13 COMR. LANDIS: Okay. We are going to move
14 ahead here. Your objection is noted. You have got
15 your offer of proof in the record. Now, let us go
16 ahead and take us through the testimony.
17
18 By Ms. Barone:
19 Q Mr. Burt, do you have a summary of your
20 testimony?
21 A Yes, I do.
22 MS. BARONE: Would you offer that at this
23 time --
24 MR. SCHUDEL: Objection. This is not a
25 summary. This is to go through page by page his

1 prefiled.

2 COMR. LANDIS: I think we are going to need

3 to do that in order for the objections to be made and

4 for you to be heard on the objections. It is as much

5 for your benefit, Ms. Barone, as anyone else's so

6 that you can be heard on the objections, and get that

7 in the record.

8

9 By Ms. Barone:

10 Q Please state your name and address. We are

11 going to go through your testimony, page by page.

12 A James R. Burt. My address is 6450 Sprint

13 Parkway, Overland Park, Kansas 66251.

14 Q By whom are you employed and in what

15 capacity?

16 A I am employed as Director, Regulatory Policy

17 for Sprint Corporation. I am testifying in this

18 proceeding on behalf of Sprint Communications Company

19 LP, Sprint.

20 Q Please provide your educational and work

21 background.

22 A I received a Bachelor of Science Degree in

23 electronic engineering from the University of South

24 Dakota in 1980 and a Master's in Business 0659

25 Administration from Rockhurst College in 1989. I

1 became Director of Regulatory Policy in February of
2 2001. I am responsible for developing state and
3 federal regulatory policy and legislative policy for
4 Sprint Corporation, including the coordination of
5 regulatory and legislative policies across the
6 various Sprint business units, and the advocacy of
7 such policies before regulatory and legislative
8 bodies. From 1997 to February of 2001, I was the
9 Director of Local Market Planning. I was responsible
10 for policy and regulatory position development,
11 advocacy from a CLEC perspective. In addition, I
12 supported interconnection agreement negotiations and
13 had the responsibility for various other regulatory
14 issues pertaining to Sprint's CLEC efforts. From
15 1996 to 1997, I was Local Market Director responsible
16 for Sprint's interconnection agreement negotiations
17 with BellSouth. I was Director, Carrier Markets, for
18 Sprint's Local Telecom Division from 1994 to 1996.
19 My responsibilities include interexchange carrier
20 account management and management of one of Sprint's
21 interexchange carrier service centers. From 1991 to
22 1994, I was General Manager of United Telephone Long
23 Distance, a long distance subsidiary of Sprint 0660
24 /United Telephone Company. I had profit and loss
25 marketing and operations responsibility. From 1989

1 to 1991, I held the position of Network Sales Manager
2 responsible for sales of business data and network
3 solutions within Sprint's Local Telecom Division.
4 From 1988 to 1989, I functioned as the Product
5 Manager for data and network services also for
6 Sprint's Local Telecom Division. Prior to Sprint, I
7 worked for Ericsson, Inc., for eight years with
8 positions in both engineering and marketing.
9 Q Have you testified previously before state
10 regulatory commissions?
11 A Yes. I have testified in Georgia,
12 Louisiana, Pennsylvania, Maryland, Illinois, and
13 Iowa, and have supported the development of testimony
14 in many other states.
15 Q What is the purpose of your testimony?
16 A The purpose of my testimony is to support
17 Sprint's application to amend its certificate of
18 public convenience and necessity to provide local
19 exchange telecommunications services in all exchanges
20 within the state of Nebraska in which Sprint is not
21 currently certified. My testimony will address
22 Sprint's financial, technical, and managerial 0661
23 qualifications. Additionally, I will describe the
24 relationship between Sprint and Time Warner Cable
25 Information Services, LLC. Sprint witness, Dr. Brian

1 Staihr, will address the public interest aspects of
2 Sprint's certification application.
3 Q Why is Sprint seeking to expand its
4 certificate of public convenience and necessity to
5 include all exchanges within the state of Nebraska in
6 which Sprint is not currently certified?
7 A Sprint is seeking to amend its certificate
8 of public convenience and necessity for two reasons.
9 First, to provide local interconnection transport and
10 switching services in support of Time Warner Cable
11 Information Services LLC's local and long distance
12 voice service market entry. In order to provide
13 these services, Sprint will be entering into local
14 interconnection agreements with Nebraska incumbent
15 local exchange carriers.
16 MR. SCHUDEL: I would interpose my first
17 objection. My objection, to restate it, is that this
18 testimony in the next sentence continuing from Page
19 3, Line 23, through Page 4, Line 2, lacks proper and
20 sufficient foundation under Rule 602 which provides
21 that a witness may not testify to a matter unless
22 evidence is introduced sufficient to support the
23 finding that he had personal knowledge of the matter.
24 It is speculative in that it purports to explain that
25 some ILECs will refuse, meaning a future event which

1 hasn't occurred and which he can't know will occur.
2 It is speculative and it is irrelevant to the point
3 that he just stated before governed the Commission's
4 consideration of this application.
5 MR. FAHLESON: We join in the objection and
6 add a hearsay objection as well referenced to --
7 regulations not in evidence constitutes hearsay.
8 MS. BARONE: In response, in Mr. Burt's
9 capacity, if you ask him on cross-examination whether
10 he has actual knowledge or not, then, I am sure you
11 will find that he does. I think I can hear that also
12 on direct and he is testifying that he does have
13 knowledge of this; therefore, it is not -- he has
14 laid a foundation. In terms of -- this is up to --
15 so, therefore, it is not irrelevant. He is
16 testifying on behalf of Sprint and he does have
17 knowledge of this based on his testimony. In terms
18 of -- are we up to 4.2 here? With regard to the Code
19 of Federal Regulations, again, that is -- the Code of
20 Federal Regulations is something that this Commission
21 can take administrative notice of. Therefore, it is
22 not improper to keep the testimony. 0663
23 COMR. LANDIS: Your objection is noted, your
24 response is noted, it is in the record. Go ahead
25 with your testimony. Again, we are going to reserve

1 on this, and will decide and strike at the
2 appropriate time.
3 MR. BURT: Although the Code of Federal
4 Regulations says otherwise, some ILECs will refuse or
5 are reluctant to negotiate an interconnection
6 agreement if the requesting carrier is not certified.
7 Second, Sprint constantly evaluates local market
8 entry alternatives and statewide certification
9 facilitates and shortens market entry intervals. The
10 combination of dynamic market entry planning and the
11 sometimes protracted certification proceedings it's
12 in Sprint's best interest to be certified on a
13 statewide basis.
14 Q Why doesn't Sprint limit is certification
15 amendment consistent with its commitment to Time
16 Warner Cable?
17 A There are several reasons why it is
18 necessary for Sprint to receive certification
19 throughout the state of Nebraska. First, as stated
20 above, Sprint is constantly evaluating local market
21 entry alternatives and statewide certification is
22 most appealing and provides efficiencies to that
23 ongoing effort. Second, since Sprint submitted its
24 application to amend its certificate of public
25 convenience and necessity on July 16, 2004, it has

1 entered into an agreement with another cable company
2 intending to provide service in Nebraska. Sprint is
3 in various stages of negotiations with several cable
4 companies and timely market entry is important to all
5 of them, therefore, having statewide certification is
6 important to meeting this goal. Third, it is most
7 efficient for all parties and the Nebraska Public
8 Service Commission to address the issues relevant to
9 Sprint's certification expansion one time rather than
10 several times. Finally, Sprint is seeking --
11 MR. SCHUDEL: At this time, I would note an
12 objection for the record with respect to the
13 reference. There is a reference in a footnote or
14 there is going to be a reference to previous actions
15 of this Commission. Contrary to what Ms. Barone
16 says, the Nebraska Supreme Court, as of late, has
17 strongly discouraged the use of administrative or
18 judicial notice and has clearly indicated that those
19 exhibits or items would be made an exhibit. So, we
20 would object to any reference to any orders or past
21 actions of the Commission.
22 COMR. LANDIS: Give me the lines, Mr.
23 Schudel, that you are objecting to, so --
24 MR. SCHUDEL: Yes. It is Lines 1 and 2 on
25 Page 5, and the footnote, too.

1 COMR. LANDIS: Okay.

2 MR. SCHUDEL: And, as you will note in my

3 list that I distributed earlier, I also object to

4 that. It lacks proper and sufficient foundation.

5 None of the supposed 50 applications to which he

6 apparently makes reference are before this

7 Commission, and therefore in addition, it is hearsay.

8 COMR. LANDIS: Ms. Barone?

9 MS. BARONE: And, reviewing the courts

10 decisions in this state, this Commission is well

11 within its bounds to take official or take

12 administrative notice of its previous orders. This

13 Commission has done so in this case already with

14 regard to orders in the state of Nebraska and another

15 state as well.

16 MR. SCHUDEL: Let me just say that that is

17 simply not true. This Commission may not take

18 administrative notice when the strict rules of

19 evidence are applied. At 84-914(1) provides what

20 administrative notice is, and I argued that and it is

21 briefed in my memorandum that you heard on the Motion

22 in Limine. If we are now going to be under the

23 strict rules, the judicial notice rule, which is

24 found in 27-201 of the Nebraska Statutes, is the

25 controlling section and Ms. Barone's argument fails

1 under that standard.

2 MS. BARONE: That is not correct. The

3 Commission can continue to take judicial notice or

4 administrative notice in this proceeding.

5 COMR. LANDIS: Okay, fine. We had an

6 objection lodged, response to it. Let us go on with

7 the testimony. It is noted and we will decide

8 whether it is a good objection or not at a later

9 time. Go ahead.

10 MR. BURT: Finally, Sprint is seeking the

11 same authority previously granted to over 50

12 companies in the state of Nebraska.

13

14 By Ms. Barone:

15 Q Is statewide certification the only thing

16 Sprint needs to support is cable company commitments

17 or potential Sprint plans?

18 A No. Certification is only one of the

19 requirements. There are other steps Sprint must

20 take. Sprint must negotiate and possibly arbitrate

21 interconnection agreements with ILECs. Each

22 agreement must be approved by the Nebraska Commission

23 before Sprint can actually provide service. Sprint

24 must submit a bonafide request for interconnection

25 with rural ILECs for which the Commission must

1 determine whether the rural exemption created by the
2 Federal Telecommunications Act of 1996 should be
3 lifted.
4 Q Should the rural exemption issue be
5 considered as a part of this proceeding?
6 A No. This proceeding should focus on
7 Sprint's financial, managerial and technical
8 qualifications as well as the public interest. This
9 is consistent with previous Commissions orders
10 pertaining to statewide certification.
11 Q Does Sprint have sufficient financial
12 resources to provide the proposed services?
13 A Yes. Sprint's most recent Form 10-K
14 documents --
15 MR. FAHLESON: I will object on hearsay
16 basis as well as foundation and authenticity. There
17 is simply no basis referring to documents which this
18 individual has no foundation or basis to testify
19 about.
20 MR. SCHUDEL: I would join in that objection.
21 COMR. LANDIS: It would be Line 21?
22 MR. FAHLESON: And, the footnote, and 22 as
23 well.
24 MR. SCHUDEL: I would join in that objection.
25 MS. BARONE: Mr. Burt has testified that has

1 has reviewed the documents earlier, and, at this
2 point, has reviewed the application. We have offered
3 that and I would like to note for the record that
4 this is an exception to the hearsay rule. Mr. Burt
5 has read the application. He has reviewed it.
6 801(4)(b) states that a document is not hearsay if
7 the witness manifested adoption or belief in its
8 truth. Also, these are official pursuant to Rule
9 902(4) that are on file. The 10K documents are on
10 file.
11 MR. FAHLESON: I would note for the record
12 those are not certified copies which are being
13 offered or being testified to. That is required in
14 any court of law.
15 COMR. LANDIS: Anything else that you want to
16 add?
17 MS. BARONE: Again, I would just say that it
18 is self-authentification under Rule 902(4).
19 MR. SCHUDEL: I would just simply state that
20 on further review, I am confident that the Commission
21 will see that 801(4)(b) is inapplicable and these are
22 not self-authenticating.
23 COMR. LANDIS: Let us go ahead and proceed
24 with the testimony.
25 MR. BURT: Sprint'S most recent Form 10K

1 document shows combined revenues of over $26 billion
2 and operating income of almost $900 million.
3
4 By Ms. Barone:
5 Q Does Sprint have sufficient technical and
6 managerial competency to provide the proposed
7 services?
8 A Yes. Sprint is a global communications
9 company and a leader in integrating long-distance,
10 local service, and wireless communications. Sprint
11 is the nation's third largest provider of long
12 distance services based on revenues and operates a
13 nationwide, all digital long distance networks using
14 fiber optic and electronic technology. Sprint
15 currently serves approximately 7.9 million access
16 lines within its franchise territories in 18 states,
17 and provides local service using its own facilities,
18 leased facilities or unbundled network elements
19 provided by other carriers in 36 states and the
20 District of Columbia. Sprint is serving the cable
21 telephony market through arrangements with cable
22 companies that resell Sprint long distance service
23 and use Sprint's back office systems and network
24 assets in support of their local telephone service
25 provided over cable facilities. Spring also operates

1 a 100% digital personal communications service, or
2 PCS, wireless network with licenses to provide
3 service to the entire United States population,
4 including Puerto Rico and the US Virgin Islands. The
5 PCS Group, together with third party affiliates,
6 operates PCS systems in over 300 metropolitan
7 markets, including the --
8 MR. SCHUDEL: I am just going to object to
9 Footnote 5 when we get to that point.
10 MR. FAHLESON: I will object to Lines 19
11 through 21, especially Footnote 5, which is hearsay
12 reference to a 10K for which there is insufficient
13 foundation on its authenticity. Just note it for the
14 record.
15 MS. BARONE: We authenticated it through Mr.
16 Burt earlier.
17 COMR. LANDIS: Okay. Go ahead with the
18 testimony.
19 MR. BURT: The PCS Group, together with
20 third party affiliates, operates PCS systems in
21 over 300 metropolitan markets, including the 100
22 largest US metropolitan areas. The PCS Group, 0671
23 combined with our wholesale and affiliate partners,
24 serves more than 20 million customers at the end of
25 2003.

1 By Ms. Barone:

2 Q Are Sprint's managerial, financial and

3 technical capabilities the same as when Sprint was

4 granted a certificate of public convenience and

5 necessity on March 10, 1997, in application Number C-

6 1386?

7 A Yes.

8 MR. SCHUDEL: I am going to object -- a

9 further objection here because -- insert a further

10 objection here simply because this witness already

11 testified that at this time, he was not involved with

12 this -- a position that would be aware of these

13 capabilities in 1997. I think he lacks the knowledge

14 and therefore this lacks proper and sufficient

15 foundation.

16 MS. BARONE: Commissioner Landis, Mr. Burt is

17 an executive for Sprint. He does have knowledge of

18 the operations of Sprint and what has occurred

19 previously.

20 COMR. LANDIS: The objection is on the record

21 and the response is on the record. We will go ahead

22 with the testimony.

23 MR. BURT: Yes. Spring's managerial,

24 financial and technical capabilities are essentially

25 equivalent, if not better, compared to what they were

1 in 1997 when Sprint was granted a certificate of
2 public convenience and necessity to provide service.
3
4 By Ms. Barone:
5 Q Please describe the relationship between
6 Sprint and TWCIS:
7 A Sprint leverages its vast network,
8 managerial and technical capabilities in both the
9 retail and wholesale market segments. Whole service
10 has always been a significant segment to Sprint.
11 This is represented by Sprint's success in both
12 wireline and wireless services. Sprint is now
13 leveraging its wholesale expertise and success to the
14 cable segment. Virtually all cable companies want to
15 provide local and long distance service and Sprint
16 has seen considerable success partnering with the
17 cable companies. The relationship between Sprint and
18 Time Warner Cable Information Services is quite
19 simple. Time Warner Cable is the retail provider of
20 local and long distance. Time Warner Cable will
21 provide end user billing, marketing and sales,
22 customer service and customer access. Sprint
23 provides wholesale services that enables the Time
24 Warner Cable retail service. These services include
25 Public Switched Telephone Network interconnectivity,

1 long distance service, operator and directory
2 assistance service, 911 connectivity and number
3 administration.
4 Q Does the wholesale/retail relationship used
5 by Sprint and its cable partners create any problems
6 relative to a business model where the same entity
7 provides the retail and the wholesale services
8 described above?
9 A No --
10 MR. SCHUDEL: I would interpose the next
11 objection listed on the material that I distributed.
12 The answer lacks proper and sufficient foundation
13 under Rule 602. It is speculative and it also
14 constitutes hearsay.
15 MR. FAHLESON: We would join in that
16 objection.
17 MR. SCHUDEL: And, that is an objection to
18 Lines 4 through 21 on Page 8.
19 MS. BARONE: Mr. Burt, again, is an executive
20 of Sprint who has first hand knowledge of these types
21 of relationships and has knowledge with regard to the
22 retail/wholesale model at issue being discussed
23 between Sprint and its cable partners.
24 COMR. LANDIS: Okay. The objection again is
25 on the record, and the response. So, we will go

1 ahead with the testimony.

2 MR. BURT: No, the wholesale relationship

3 described is effectively the same as a business model

4 where the same entity provides both the retail and

5 wholesale services. The retain/wholesale model

6 Sprint and the cable companies are using isolate all

7 of the retail relationships and functions with the

8 cable company. The inter-carrier relationships and

9 functions are provided by Sprint. This is important

10 because for all practical purposes, the retail and

11 inter-carrier relationships are isolated from one

12 another. By that I mean the retail relationship

13 between a service provider and an end user does not

14 have visibility or interaction with the functions

15 that are performed between carriers. For example,

16 when a cable company is marketing or selling its

17 service, providing customer service or end-user

18 billing, there is no visibility from the standpoint

19 of the end-user to the inter-carrier functions being

20 performed such as interconnection, number porting,

21 etc. An example of where two different entities

22 combine their efforts to provide an end-user service

23 is operator services. Until very recently, United

24 Telephone Company of the West provided retail 0675

25 operator services to its end-users through a

1 contractual relationship with another carrier that
2 actually provides the operator services.
3 Furthermore, Sprint and Time Warner Cable are
4 operating under this retail/wholesale model in
5 numerous states today serving thousands of customers.
6 Q Please summarize your testimony.
7 A Sprint --
8 MR. SCHUDEL: At this time, I would interpose
9 further objections as to the sentence beginning on
10 Line 5 on Page 9 continuing through Line 7. I object
11 to that as an improper legal conclusion. It lacks
12 proper and sufficient foundation, essentially is
13 attributing to Dr. Staihr a particular legal finding
14 that is for this Commission to make. I might add
15 that the law of Nebraska is even if this witness were
16 qualified as an expert which he has not been, the law
17 is that expert testimony concerning a question of law
18 is generally not admissible as based on the case of
19 High Stand vs. High Stand, 267 Neb. 300. I also
20 object to that particular sentence as hearsay, and
21 with regard to the sentence beginning also at Line 7
22 and continuing through Line 9, the statements
23 contained therein, lack proper and sufficient
24 foundation under Rule 602. They constitute hearsay
25 and again constitute an improper and legal conclusion

1 which should not be admitted based upon the reasoning
2 that I just offered.
3 MR. FAHLESON: We would join in that
4 objection and just note that the purpose of a witness
5 is to provide factual evidence to the finder of fact.
6 It is your decision to decide what the law is. It is
7 improper to receive testimony regarding what the law
8 should be.
9 MS. BARONE: There is no -- Mr. Burt has not
10 claimed that he is an attorney, but it is certainly
11 permissible for him to state his opinion. With
12 regard to the lack of foundation, again, with regard
13 to qualifications, Mr. Burt is an executive with
14 Sprint. He has reviewed the application that is
15 before this Commission, and is well qualified to
16 testify on that.
17 COMR. LANDIS: You have been heard. I think
18 you are currently on Line 2 in your answer if I am
19 not mistaken.
20 MR. BURT: Sprint has demonstrated that it
21 has the managerial, technical and financial 0677
22 capabilities consistent with Commission requirements.
23 In fact, they are essentially the same as when this
24 Commission granted Sprint's current certificate of
25 public convenience and necessity in 1997. Sprint's

1 application is also consistent with the public
2 interest standard used by the Commission as
3 demonstrated by Dr. Brian Staihr. These four
4 criteria have been used repeatedly in determining
5 whether an entity qualifies for and is granted a
6 statewide certificate. Accordingly, Sprint requests
7 to grant its request to amend its certificate
8 consistent with criteria used previously by the
9 Commission.
10 Q Does that conclude your testimony?
11 A Yes.
12 COMR. LANDIS: We will move to cross-
13 examination. Then, I think I already explained that
14 cross should be handled as if the objections to the
15 testimony were overruled.
16 MR. SCHUDEL: If I may, just before I start
17 my cross, then, given that ground rule, if you will,
18 is Ms. Barone going to be afforded redirect
19 examination and if so, is she going to be allowed to
20 redirect into the areas where objections have been
21 interposed? Because at that point, that allows her
22 the opportunity effectively to indirectly circumvent
23 the objections that are on the table.
24 COMR. LANDIS: We expect the cross-
25 examination to come -- to be relevant and to deal

1 directly with the direct testimony. We don't expect
2 any redirect to expand upon the direct testimony or
3 the cross. I assume the cross will be limited --
4 MR. SCHUDEL: I agree with that. I simply --
5 within the scope of the area now that I have to face
6 for cross are all of these reserved rulings. My
7 question is, if you can give me any guidance, do I
8 just state some sort of reservation at the beginning
9 of all of those objections and proceed because I
10 don't want to be regarded as waiving those objections
11 by interrogating him because I don't know at this
12 point whether I should or shouldn't interrogate.
13 Furthermore, as I asked before, then, will Ms. Barone
14 be allowed to come back into those areas that have
15 been objected to and redirect on those?
16 MS. MELTON: May I suggest we take a brief
17 recess and just maybe decide how this is going to
18 proceed so that we avoid maybe some of the
19 complexities that are coming up right now?
20 COMR. LANDIS: Probably a good idea. Let us
21 take 10 minutes here. Angela, why don't you and Mr.
22 Schudel and Mr. Fahleson, all of us get together in
23 the law library and talk about this? Is that what
24 you want to do or do you want to just get me aside?
25 MS. MELTON: If you would like to step aside

1 and maybe consider some of the objections and you
2 might be able to rule on some of them immediately and
3 resolve some of the complexities that are going to be
4 come up if we reserve them. Either way you want to
5 do it.
6 COMR. LANDIS: We are not going to step
7 aside. We want it on the record.
8 MS. MELTON: I am just saying that if you
9 want to consider the objections, take a recess,
10 consider some of the objections and come back and
11 rule on them or we could step aside, take a recess,
12 and discuss how this is going to proceed as agreed.
13 COMR. LANDIS: Let us talk about how it is
14 going to proceed as a group. I am hesitant to start
15 making rulings without an opportunity to look at the
16 law and be guided by that, when I start making
17 rulings. So, let us take a 10 minute recess. The
18 rest of the attorneys gather, Angela and myself in
19 the law library, and see if there is a way we can
20 figure out how this can move forward in an orderly
21 fashion. Get everything on the record that people
22 feel needs to be on, get all the objections in that
23 think they need to be -- things that need to be
24 objected to, and responses. Okay. Let us adjourn to
25 the law library.

1 (Off the record)

2 COMR. LANDIS: Back on the record. We have
3 just met with staff counsel and attorneys for all the
4 parties that are here present today. We are going to
5 take an hour lunch break. While everyone is having
6 lunch, the staff attorneys and myself will sit down.
7 We have got the objections that have been lodged. We
8 are going to rule on those objections before going
9 into cross-examination. We are going to rule on the
10 admissibility of the amended application. We will
11 announce those when everyone gets back at 12:30.
12 Then, we will move from there to cross-examination.
13 Does that reflect everybody's understanding of where
14 we are in this matter? So, at this point, we will
15 take an hour lunch break and we will reconvene at
16 12:30.
17
18 (Whereupon, at or about 11:30 a.m., November
19 4, 2004, said hearing was recessed until 12:30 p.m.,
20 November 4, 2004)
21

1 Afternoon Session -- November 4, 2004

2 COMR. LANDIS: Back on the record. I am

3 going to deal with the objections posed on Mr. Burt's

4 prefiled testimony. With respect to the objection on

5 the application, the objection is overruled and the

6 application will be admitted. I think that is

7 Exhibit 3.

8 (Commission Exhibit Number 3 was received in

9 evidence. See Supp. Volume)

10 With respect to the objection on Mr. Burt's

11 testimony, Page 3, Line 23, and Page 4, Line 2, the

12 objection to that testimony is overruled including

13 the objection by Mr. Fahleson to the footnote. With

14 respect to the testimony found on Page 5, Lines 1 and

15 2, and the footnote, the objection there is also

16 overruled. With respect to the testimony found on

17 Page 5, Line 21, Lines 1 and 2, I have covered that.

18 I believe I have -- this is also Page 5, Lines 21 and

19 22, the objection is overruled. We have an objection

20 on the testimony found on Page 6, Lines 18 through

21 21, and the footnote -- Footnote Number 5, that

22 objection is also overruled. With respect to the

23 testimony on Page 7, Lines 1 through 6, that

24 objection is overruled. With respect to the

25 testimony found on Page 8, Lines 4 through 21, the

1 objection there is sustained. With respect to the
2 testimony found on Page 9, Lines 5 through 7, and
3 Lines 7 through 9, the objection there is sustained.
4 So, we will now move to cross, if you are ready, Mr.
5 Schudel. Do you want a moment or two to go through
6 this testimony?
7 MR. SCHUDEL: I will be ready here in one
8 second.
9
10 CROSS-EXAMINATION
11 By Mr. Schudel:
12 Q Good afternoon, Mr. Burt.
13 A Good afternoon.
14 Q I would like to start by referring your
15 attention to Page 1 of your prefiled testimony, Lines
16 7 through 9. I just want to clarify. You state that
17 you are an employee of Sprint Corporation but you are
18 testifying on behalf of the applicant. If I can now
19 ask you to flip forward to Page 6 of your testimony.
20 My question is when you use Sprint, the name Sprint,
21 in the context of Page 6, are you referring to Sprint
22 Corporation or the applicant?
23 A All inclusive, both, Sprint Corporation as
24 well as the applicant.
25 Q Well, is this applicant, quote, a global

1 communications company and a leader in integrating
2 long distance, etc? I mean, all I need is a
3 clarification.
4 A Yes, it is.
5 Q So, this applicant has operations worldwide?
6 A Yes, to the best of my understanding, yes.
7 Sprint Communications Company Limited, yes.
8 Q Is that line of business interexchange?
9 A That is a part of it, yes.
10 Q And, is it wireless?
11 A From a legal perspective, although I am not
12 an attorney, the wireless company is a separate legal
13 entity from Sprint Communications Company LP.
14 Q And, is another line of business local
15 exchange service of the applicant?
16 A Yes.
17 MR. SCHUDEL: Mr. Hearing Officer, I need to
18 have a couple of exhibits marked, if I may. For
19 everyone's information, Exhibit 7 that has been
20 marked by the reporter is a copy of Sprint's
21 confidential responses to interveners data request.
22 All parties were served with those and the original,
23 I believe, was submitted to the Commission, so, I did
24 not make copies. I don't think that is necessary.
25 The Exhibit 8 is the confidential agreement between

1 Sprint and Time Warner. Again, that has been shared
2 with those parties have signed off on the
3 confidentiality agreement in connection with the
4 hearing officer's protective order. At this time, I
5 guess I would start with this. I don't find that on
6 the --
7 (Intervener Exhibits Number 7 and 8 were
8 marked for identification)
9 MS. BARONE: May I just note something for
10 the record based on just the exhibit numbers? Now, I
11 didn't get a copy of those prior to the hearing. I
12 assume that I have the right ones, but I just want to
13 note that for the record.
14 COMR. LANDIS: Fine, go ahead, Mr. Schudel.
15 MR. SCHUDEL: On the confidential responses
16 to intervener's data request, contrary to Rule 33(a)
17 of the Nebraska discovery rules, they were not
18 verified. I guess I would ask Ms. Barone's
19 assistance whether I can ask this witness to verify
20 or whether you want to state for the record that
21 these are verified as true and correct responses?
22 How do you wish to handle that? 0685
23 MS. BARONE: For those questions that Mr.
24 Burt responded to, certainly, you can ask him that
25 question.

1 By Mr. Schudel:
2 Q Mr. Burt, if you would refer to what has
3 been marked as Exhibit 7, which I gave you in a
4 manila envelope, can you identify that document for
5 the record?
6 A Yes. This is Sprint's confidential
7 responses to intervener's data request.
8 Q Have you had occasion to read this document
9 prior to today's hearing?
10 A Yes.
11 Q In fact, are you one of the two individuals
12 listed as having prepared the responses?
13 A Yes, I am.
14 Q Can you state for the record since these
15 were not verified, can you state for the record and
16 verify that the answers provided to which your name
17 is associated are true and correct?
18 A Yes.

19 MR. SCHUDEL: I would offer the following
20 response. I am not offering the entirety of Exhibit
21 7. I am offering the responses to Response Number 2
22 which Mr. Burt has listed as responding to, Response
23 Number 3, again Mr. Burt listed. Response Number 5,
24 Mr. Burt listed, Response Number 6, Mr. Burt listed,
25 and Response Number 8, again Mr. Burt listed. I

1 would make that limited offer of Exhibit 7 at this
2 time. I might add that in the Motion in Limine, Ms.
3 Barone wrote, quote, Sprint does not object to
4 designating items as exhibits that have been produced
5 in response to discovery requests in this proceeding.
6 COMR. LANDIS: I am aware of that. Thank
7 you. I am waiting to see if she has any --
8 MS. BARONE: No, I did not object to
9 designating as exhibits. I reserve the right to
10 object to admitting this as an exhibit.
11 COMR. LANDIS: Well, I think the offer is
12 being made right now. I am treating it as an offer.
13 MR. SCHUDEL: That is exactly what it is.
14 COMR. LANDIS: So, if you have an objection,
15 now is the time to pose it.
16 MS. BARONE: No objection.
17 COMR. LANDIS: Very well. With respect to
18 Exhibit 7, Responses 2, 3, 5, 6 and 8, those
19 responses will be admitted into evidence in this
20 matter.
21 (Intervener Exhibit Number 7 was received in
22 evidence. See Supp. Volume)
23 MS. BARONE: I would just ask. Do you intend
24 to offer the other responses as well?
25 MR. SCHUDEL: I haven't yet determined that.

1 MS. BARONE: Okay.

2

3 By Mr. Schudel:

4 Q Mr. Burt, if you would kindly make reference

5 to the other exhibit that I gave you, marked as

6 Exhibit 8. Let me say first, I am going to refrain

7 from asking anything concerning the contents. I

8 would say don't give us any of the contents because

9 we understand this is confidential, but my question

10 for you, since again, it was attached to what you

11 have already identified as Exhibit 7, can you

12 identify that as a true and correct copy of the

13 wholesale voice services agreement between Time

14 Warner Cable, Inc., and Sprint Communications Company

15 LP?

16 A It appears to be.

17 MR. SCHUDEL: And, in fact, I can represent

18 to you that that document and the container it came

19 in are precisely what I received from Ms. Barone.

20 So, as far as I know, it is a correct copy. I would

21 offer Exhibit 8.

22 MS. BARONE: That is fine.

23 COMR. LANDIS: Exhibit 8 will be admitted

24 into evidence.

25 MR. SCHUDEL: Thank you.

1 (Intervener Exhibit Number 8 was received in
2 evidence. See Supp. Volume)
3
4 By Mr. Schudel:
5 Q If you will refer back now to Data Request
6 Number 8, your response thereto, Sprint describes
7 itself in that response which is attributed to you as
8 a, quote, competitive local exchange carrier.
9 Correct?
10 A Yes.
11 Q If certificated by this Commission, will
12 Sprint, in its capacity as an enabler, which you also
13 used that term in your direct testimony, will Sprint
14 in its capacity as an enabler provide
15 telecommunications services within any local calling
16 area for which expanded CLEC authority is being
17 requested in this case?
18 A Sprint will abide by all the appropriate
19 rules and regulations that apply to it.
20 Q That is not my question. Let me repeat it.
21 If certificated by this Commission, will Sprint, in
22 its capacity as an enabler, provide
23 telecommunications service within any local calling
24 area for which expanded CLEC authority is sought?
25 A Well --

1 MS. BARONE: Objection. Can you define
2 telecommunications service?
3 COMR. LANDIS: I, for one, did not hear the
4 objection. I don't see any reason why he can't
5 respond to it.
6 MS. BARONE: Go ahead.
7 MR. BURT: We intend to provide the services
8 that we have outlined here for two purposes. One is
9 in support of the cable contracts that we have in
10 place in the state of Nebraska as well as if we
11 choose to enter into any other retail services on
12 behalf of Sprint.
13 MR. SCHUDEL: I would move to strike the
14 answer as not responsive and I will re-ask the
15 question.
16 COMR. LANDIS: Ask the question again.
17 MR. SCHUDEL: May I have a ruling on my
18 request to strike?
19 COMR. LANDIS: It will be stricken, and let
20 us ask the question again. Let us attempt to be
21 responsive. If you don't know the answer, say I
22 don't know.
23 MR. BURT: I am trying to answer the
24 question.
25 COMR. LANDIS: Sure. We appreciate that. Go

1 ahead with your question.

2

3 By Mr. Schudel:

4 Q If certificated by the Commission, will

5 Sprint, in its capacity as an enabler, as you have

6 described your company, provide telecommunications

7 service within any local calling area for which

8 expanded CLEC authority is requested? It is a yes or

9 no question.

10 A Well, I guess I -- that is the part I am

11 struggling with because we are seeking statewide

12 certification. As an enabler, we currently have

13 contracts that do not include all of the ILEC

14 territories within the state of Nebraska in which we

15 are not certified. So, I can't say that I am going

16 to provide service outside of where I currently have

17 a contract.

18 Q Didn't my question start, if certificated by

19 the Commission? Assuming that your application is

20 granted, maybe that helps, assuming that this 0691

21 application is granted, will Sprint, in its capacity

22 as an enabler, provide telecommunications service

23 within any local calling area for which your expanded

24 CLEC authority is being sought in this application?

25 A We will provide those services as an enabler

1 where we have a contract with the cable companies to
2 provide those services.
3 Q What services?
4 A The services that we have contracted with
5 any particular cable company to provide.
6 Q Will those services be telecommunications
7 services?
8 A Yes.
9 Q Will Sprint service offerings as an enabler
10 in the expanded area that you propose in this
11 application be made available only to cable companies
12 described in your prefiled testimony?
13 A May I -- that would require me to speculate
14 somewhat as to what we might do in the future if some
15 other entity agrees to the same terms and conditions
16 that the cable company has agreed to. I think that
17 we would provide those services there as well or to
18 them as well.
19 Q Will your services be available only to
20 cable companies?
21 A It --
22 MS. BARONE: Objection. Calls for
23 speculation.
24 COMR. LANDIS: Answer the question, if you
25 know, if you have the answer.

1 MR. BURT: Fine. I think I did answer the
2 question. If another entity is willing to enter into
3 an agreement as we have with the cable company, yes,
4 we will provide that service.
5 COMR. LANDIS: Okay.
6
7 By Mr. Schudel:
8 Q Is the agreement to which you just
9 referenced that which we marked as Exhibit 8 which is
10 before you?
11 A Yes.
12 Q As an enabler, to use your term, will Sprint
13 offer telecommunications for a fee to the general
14 public?
15 A As an enabler -- I want to make sure I
16 understand what you -- when I say enabler, that is
17 describing the wholesale relationship we have with
18 the cable company. In that instance, we are not
19 providing a service to an end user. The cable
20 company provides the service.
21 Q Are the terms on which Sprint will act as an
22 enabler for Time Warner set out in Exhibit 8?
23 A I think generally, yes.
24 Q Is there any other document besides that to
25 your knowledge that sets out the terms if it -- if

there is something else?

A The legal terms or operating terms? What kind of terms are you referring to?

Q I would say legal.

A These are the legal terms. This is the contract between the two parties.

Q If certificated by this Commission in this application, does Sprint intend to file a tariff with the Commission?

A For these wholesale services? No.

Q So, would it then follow that the wholesale voice services agreement, Exhibit 8, will not be filed as a tariff with this Commission?

A If the Commission determines that it is necessary for Sprint to file a wholesale tariff, we will abide by that, yes.

Q Do you intend to, short of that requirement?

A We are not aware of any need to file a tariff for these wholesale services.

Q Has either this wholesale voice service agreement or one of similar content been filed by Sprint as a tariff with any regulatory body in any other jurisdiction?

A Not to my knowledge.

MR. SCHUDEL: If I may, I am going to make

1 the offer here and then hand it to the witness. I
2 have just distributed a copy of Rule of Telecom
3 Procedure 2.21, and I would like to question this
4 witness with regard to this rule. I would need to
5 offer it into evidence. I would ask that you take
6 administrative and/or judicial notice of this rule.
7 COMR. LANDIS: We will take notice of it.
8 (Intervener Exhibit Number 9 was marked for
9 identification)
10
11 By Mr. Schudel:
12 Q Mr. Burt, I have handed to you what has been
13 marked as Exhibit 9 by the reporter. That is, I will
14 represent to you, a copy of Rule 002.21 of the Rules
15 of Commission Procedure -- excuse me, of the
16 Telecommunications Rules of this Commission. This
17 has to do with tariffs. My question to you, feel
18 free to take a moment to look through that, is
19 whether, as an enabler, Sprint intends to file a
20 tariff in conformity with that rule if this
21 application is granted?
0695
22 A If --
23 MS. BARONE: Objection. This calls for a
24 legal conclusion. It calls for Mr. Burt to determine
25 if that is what is necessary as an enabler.

1 COMR. LANDIS: I want you to answer the
2 question if you know the answer. Your objection is
3 overruled.
4 MR. BURT: Given the limited amount of time
5 that I have had to look at this and no legal
6 interpretation, this appears to be tariff
7 requirements for access lines service to the public
8 which my layman's interpretation would mean a retail
9 service offered to the general public.
10
11 By Mr. Schudel:
12 Q And, that is not what you seek authority for
13 in this matter, is it?
14 A Well, actually it is. If you recall, our
15 application is to serve two purposes. It is to allow
16 us to provide the wholesale services that we are
17 under contract with for Time Warner Cable and one
18 other cable company. Then, it is also -- let me
19 finish. It is also --
20 Q I would like to have you look at Exhibit
21 Number 7, your response, your sworn response, to
22 Question 6. That is the smaller document that you
23 have before you, Page 4.
24 A I have it.
25 Q It states, quote, Sprint has no current

1 plans to provide retail telecommunications services
2 within the geographic areas for which Sprint seeks
3 certification pursuant to the amended application,
4 end of quote. Isn't that your testimony -- your
5 sworn statement in this exhibit?
6 A Yes, that is it. May I finish now --
7 COMR. LANDIS: Yes. I want you to complete
8 your response to Mr. Schudel's question.
9 MR. BURT: Like I was saying, Sprint is
10 seeking certification for two reasons. One is so
11 that we are able to comply and fulfill our
12 obligations under our contract with the cable
13 company. That is one reason. The other reason is so
14 that we are certified throughout the state in the
15 event that we have plans to provide other retail
16 services as a CLEC. If indeed we do provide retail
17 services and those required tariffs, we will file
18 tariffs per the Commission's rules.
19 0697
20 By Mr. Schudel:
21 Q Look at Page 4 of your prepared testimony.
22 In response to the question there about why doesn't
23 Sprint limit its certification, then, consistent with
24 the commitment to TWCIS, you continue to give a
25 response as to the intentions. Looking at Line 17

1 and following, you state, quote, Sprint is in various
2 stages of negotiations with several cable companies
3 and timely market entry is important to all of them.
4 Therefore, having statewide certification is
5 important to meeting this goal. At no point in your
6 prepared direct testimony, do you speak to retail
7 service, do you, sir? Everything you have to say
8 there is about wholesale service.
9 A No, I disagree. If you go to Line 12, Page
10 4, Sprint is constantly evaluating local market entry
11 alternatives and statewide certification as most
12 appealing and provides efficiency to that ongoing
13 effort.
14 Q And, you continue to put that in context
15 with the remainder of that answer as speaking to
16 wholesale services, don't you?
17 A No, I am not. I am saying that we have
18 multiple reasons for seeking statewide certification
19 that has been granted to over 50 other CLECs in the
20 state of Nebraska. One of those is to provide
21 wholesale services. The other is to provide retail
22 services.

23 Q As an enabler, will Sprint provide
24 intrastate telecommunications services for a fee to
25 the general public in Southeast Nebraska Telephone

1 Company's service area?
2 A Again, as an enabler, you mean as a
3 wholesale provider at the time --
4 Q It is your term --
5 A -- as -- let me finish, please. As a
6 wholesale provider to Time Warner Cable in Southeast
7 Nebraska, Sprint will not be providing a retail
8 service there at this time. Sprint may have plans in
9 the future to provide retail services in that area,
10 but initially, our intent is to enable Time Warner
11 Cable to provide services in Southeast Nebraska
12 territory.
13 Q You acknowledge, do you not, that any end
14 user served in the enabler relationship, again your
15 term, your definition, with Time Warner are
16 exclusively Time Warner's customers, don't you?
17 A Yes.
18 Q Would that also be true for any other cable
19 company for which you act as an enabler?
20 A I can't speculate on how we might enter into
21 agreements in the future. The current contract that
22 we have, the cable company, is the exclusive retail
23 provider, yes. The customers are theirs.
24 Q Just to clarify, Sprint does not seek a
25 permit as a contract carrier in this application,

1 does it?

2 A I am not familiar with what that means,

3 contract carrier.

4 MR. SCHUDEL: Okay. Mr. Landis, I have a

5 series of questions that relate to Exhibit 8. I

6 don't think that I could ask those without

7 referencing the contents of that exhibit. I think we

8 need to clear the room until we complete that line of

9 questioning.

10 COMR. LANDIS: Okay. It is a confidential

11 exhibit. You are all excused, and we will get back

12 to you when you can come back in the hearing room.

13 The rest of you are asked to leave the area.

14 MR. SCHUDEL: For example, Ms. -- has signed

15 the protective order, so, I am trusting that anyone

16 in the room in addition to counsel who signed that

17 are entitled to stay.

18 COMR. LANDIS: Who has not signed it? Do we

19 have anybody left who has not signed it other than

20 Commission staff? Okay. So, other than that, we

21 have staff attorneys and attorneys that represent the

22 parties. Go ahead.

23 0700

24 By Mr. Schudel:

25 Q Referring if you will, please, to Exhibit 8,

1 the current Time Warner agreement. First of all, you
2 have acknowledged that you have read and are familiar
3 with this document. Correct?
4 A Yes. I have been through the document. I
5 am very familiar with it.
6 Q You refer to Section 9.4 and 9.5. Do you
7 acknowledge that pursuant to at least those sections
8 of the agreement that Time Warner exclusively
9 reserves to itself all customer contacts, functions?
10 MS. BARONE: Just a moment, please. I have
11 to note that 9.4 was not submitted in response to
12 this request. It does not appear --
13 MR. SCHUDEL: I don't understand.
14 COMR. LANDIS: I don't either.
15 MS. BARONE: It is not in here. We didn't
16 submit that in response to the request.
17 MR. SCHUDEL: Then, we have got a discrepancy
18 because I am working from the document that was
19 produced in response to your order, Commissioner, in
20 C-3228. I expected to be provided exactly the same
21 thing and I will be the first to admit that I have
22 not compared these two, but we obviously have a
23 discrepancy then. This document that I have before
24 me is what was represented in the Time Warner case to
25 be this exact same agreement.

1 MS. BARONE: Yes, and in this case, I
2 objected to the entering of this, and then objected
3 to a number of provisions of this, but to the extent
4 that we were going to offer it to provide evidence of
5 the relationship between Sprint and Time Warner, we
6 did not object. We objected to providing any highly
7 proprietary information or confidential. As I
8 understand it, there was no objection to that.
9 Counsel for the other side wanted to understand how
10 the relationship was going to work between Time
11 Warner and Sprint, and that was the purpose of
12 providing this. So, not every section was provided
13 in response to the discovery request. I only
14 provided what I thought counsel was looking for which
15 was the evidence of the relationship and how that
16 relationship was going to work.
17 MR. SCHUDEL: But that certainly was not my
18 understanding. Having been down this road once, it
19 was my understanding and indeed I think a reasonable
20 one that what would be provided was exactly what was
21 provided by the other counterparts of this agreement.
22 To the extent that there was a deviation, I frankly
23 have no alternative but to ask that the copy that is
24 in the Time Warner case be used in this instance
25 because that has already been approved for

1 production.

2 COMR. LANDIS: We are going to work off of

3 the information that is here. I think the reasonable

4 expectation when you asked for this agreement is that

5 you get the agreement, and that you don't decide what

6 sections are going to be included and not included.

7 MS. BARONE: In my response, Mr. Landis, I

8 understand, and in my response, in the letter

9 attached to it, we did note that we redacted all

10 highly confidential and privileged information. So,

11 I don't think there is any --

12 MR. SCHUDEL: And, the redactions were of --

13 in the same ilk in Time Warner, were the pricing

14 information. We agreed to that, and you ruled on it

15 on that basis. I didn't expect that the sections

16 would be redacted and therefore I didn't lay the one

17 beside the other. I took in good faith that it would

18 be the same.

19 COMR. LANDIS: Well, I want as complete a

20 record as we can get in front of this Commission. We

21 are going to work from this document. If there is

22 some misunderstanding, I don't think you are 0703

23 prejudiced about using this information. In fact,

24 that is the agreement as I understand it. We are

25 going to go ahead with that, and that, I assume, does

1 not include pricing information.

2 MS. BARONE: Do we have extra copies we can

3 work from?

4 COMR. LANDIS: Why don't we take a 10 minute

5 -- do you know what sections you are going to be

6 referring to -- we are going to go off the record for

7 10 minutes.

8 (Off the record)

9 COMR. LANDIS: Back on the record.

10 MR. SCHUDEL: I will try and restate the

11 question. I am sure you have lost it by now.

12

13 By Mr. Schudel:

14 Q We were referring to Sections 9.4 and 9.5 of

15 Exhibit 8, which I think we have now established are

16 before you. My question was do you acknowledge that

17 pursuant to at least those provisions of the

18 agreement that Time Warner has reserved to itself all

19 customer contact functions?

20 A Yes.

21 Q And, do you also acknowledge that all of the

22 customers of Time Warner may, in the future, serve in

23 Nebraska under this arrangement will be Time Warner's

24 customers and not Sprint's customers?

25 A As it relates to the service as defined

1 here, telephony service, yes. Services under this
2 agreement, yes.
3 Q Please refer to Section 25.2 of the
4 agreement which is on Page 39. I am looking at
5 Section 25.2. It is correct, is it not, that the
6 agreement provides that Time Warner and Sprint are
7 independent contractors and that neither party may
8 act as the agent of the other?
9 A Yes, that is correct.
10 Q On that basis, any interconnection
11 relationship that Sprint may seek to establish with,
12 quote, interconnecting providers, close quote, as
13 that is defined on Schedule 1, Page 1, of the
14 agreement will be directly with Sprint rather than
15 with Time Warner. Isn't that right?
16 A Yes, that is the intent.
17 Q So, Sprint does not intend to act as Time
18 Warner's agent to negotiate or arbitrate any
19 interconnection agreement with any ILECs. Correct?
20 A This contract says that Sprint will enter
21 into -- that Sprint company will enter into the
22 agreement, yes.
23 Q Directly, not as an agent per se.
24 A Not as an agent, yes. It doesn't say
25 whether or not in the future, Sprint could possibly

1 act as an agent for Time Warner Cable if it were
2 determined that they need to enter into a contract.
3 Q That would require, would it not, an
4 amendment in the clause 25.2 we just referred to?
5 A I --
6 MS. BARONE: Objection. Calls for a legal
7 conclusion.
8 COMR. LANDIS: I want an answer to this.
9 Answer the question if you can.
10 MR. BURT: I don't know if this would prevent
11 Sprint from acting as an agent, no.
12
13 By Mr. Schudel:
14 Q In giving that answer, did you read the
15 second sentence of 25.2?
16 A Well --
17 MS. BARONE: I would just note for the record
18 that the agent -- that the contract speaks for
19 itself.
0706
20 COMR. LANDIS: It is noted.
21 MR. BURT: I am not an attorney, but I think
22 what Sentence 2 is suggesting is that neither party
23 can enter into an agreement on behalf of the other
24 party. So, if Sprint enters into an agreement, your
25 example, an interconnection agreement, that is

1 Sprint's agreement. We couldn't enter into an
2 agreement on behalf of Time Warner Cable.
3 MR. SCHUDEL: Thank you. In your testimony
4 at Page 7, Lines 13 through 15, specifically at Line
5 15, you used the term, partnering. I just wanted to
6 clarify that.
7 COMR. LANDIS: I thought we sustained your
8 objection on that, Mr. Schudel.
9 MR. SCHUDEL: I didn't have that marked down.
10 If that is the case, then, I --
11 COMR. LANDIS: Well, subject to check.
12 Angela? I show on Lines 3 through 19 as being
13 excluded --
14 MS. MELTON: No. I think that is on Page 8.
15 COMR. LANDIS: Okay, thank you. I stand
16 corrected.
17 MR. SCHUDEL: If you want to reconsider that?
18 COMR. LANDIS: No. I apologize. I marked
19 the wrong -- go ahead.
20
21 By Mr. Schudel: 0707
22 Q All right. Referring to Page 7, Line 15,
23 you used the term, partnering. This use of the term,
24 partnering does not -- is not intended to connote a
25 legal partnership, is it?

1 A Correct.
2 Q And, that also isn't suggesting that Sprint
3 will be Time Warner's agent, is it?
4 A As it relates to end user customers or
5 interconnection agreements?
6 Q Interconnection agreements.
7 A No, that is not the intent of this, no.
8 Q Would it be fair to say that that was a
9 colloquialism that you used in your testimony?
10 A Yes.
11 Q Back to the agreement, and looking at
12 Section 10.8 on Page 22. The agreement provides in
13 Section 10.8 that Sprint is responsible for
14 settlement and administration of inter-carrier
15 compensation. Correct?
16 A Correct.
17 Q And, again, this is not as Sprint acting as
18 Time Warner or any other cable company's agent, is
19 it?
20 A That is correct.
21 Q This means that Sprint intends to seek
22 interconnection agreements with ILECs in areas
23 covered by this application. Is that the correct
24 understanding?
25 A Yes.

1 Q But the interconnection agreements that
2 would be entered into would be in the context of the
3 provision of telecommunication services to end users
4 by the cable companies. Isn't that a true statement?
5 A Or any other Sprint retail services that we
6 may decide to deploy, yes.
7 Q Yes, but just confine yourself for a moment
8 to my question, and then I understand you have got
9 another side you want to bring up. I am trying to
10 here be very clear and precise that in 10.8, the
11 interconnection agreements would be in the context of
12 the provision of telecommunication services by cable
13 companies with which Sprint is a, quote, partner, to
14 use your term. Correct?
15 A Sprint would enter into these
16 interconnection agreements for -- this is more
17 inclusive than local interconnection. This also
18 includes access charges as well, for the enablement
19 of the cable companies. So, for the local
20 interconnection aspect of that, for example, with
21 ALLTEL here in Lincoln, Sprint has an interconnection
22 agreement with ALLTEL. Sprint is responsible for
23 paying all reciprocal compensation for traffic
24 terminated to ALLTEL end users. Likewise, that
25 contract calls for ALLTEL paying Sprint for that

1 local traffic usage.

2 Q And, in that instance, that payment to

3 Sprint is for usage by Time Warner customers, isn't

4 it?

5 A In that instance, yes.

6 Q And, that would be true in Southeast

7 Nebraska Telephone Company's instance, too, in the

8 same context. Right?

9 A Yes.

10 Q Are you able to describe for the Commission

11 the nature of the interconnection arrangement that

12 Sprint would seek from ILECs in connection with this

13 enabler activities?

14 A I --

15 MS. BARONE: I will just note an objection,

16 and then you can answer. This proceeding is about

17 certification not about interconnection.

18 MR. SCHUDEL: But he expressly opened this in

19 his direct testimony. So, I think I am entitled to

20 pursue it.

21 COMR. LANDIS: You are. Answer the question.

22 You may want to restate the question.

23 0710

24 By Mr. Schudel:

25 Q Do you recall my question?

1 A Go ahead and restate it.
2 Q What is the nature, if you know, of the
3 interconnection arrangements that Sprint would seek
4 from an ILEC in connection with its enabler
5 activities in the context of this expanded
6 certification that you are seeking?
7 A I don't want to be a stickler, but by
8 arrangements, can you help me define arrangements?
9 We will -- let me just try and answer the question.
10 Q All right.
11 A We will enter into interconnection
12 agreements. We already have one with ALLTEL. We
13 will submit a bona fide request with, using your
14 example, Southeast Nebraska, to enter into
15 interconnection contract negotiations. I don't know
16 what the outcome of those negotiations will be.
17 Q But what will you be requesting? What is
18 the nature of the interconnection that you will be
19 requesting?
20 A What is the nature? The nature is going to
21 be a statement of terms and conditions for the
22 exchange of local traffic between Sprint and
23 Southeast Nebraska.
24 Q Will you be seeking unbundled network
25 elements?

1 A No.
2 Q Will you be seeking only reciprocal
3 compensation?
4 A Typically, those interconnection agreements
5 only address reciprocal compensation, yes.
6 Q You have used the ALLTEL example. Is that
7 the scope of the ALLTEL agreement to which you are
8 referring?
9 A ALLTEL is possibly broader than that. It
10 may include unbundled network elements and other
11 requirements, but, at this point in time, we don't
12 see the need for unbundled network elements with
13 Southeast Nebraska.
14 Q As an aside, do you know whether the
15 existing agreement with ALLTEL that you have brought
16 up allows it to be used for the benefit of third
17 parties, such as Time Warner? Is it only for use
18 directly by Sprint?
19 A There are no restrictions to my knowledge.
20 ALLTEL understands the relationship between Sprint
21 and Time Warner Cable. To my knowledge, they have
22 never expressed a concern with that relationship in
23 the use of that contract.
24 Q In the submission of a bona fide request,
25 which I believe you have testified that your company

1 may well do, for the purposes of enabling you to
2 provide enabler services, does Sprint take the
3 position that it would be a telecommunications
4 carrier as defined in the 1996 Act?
5 A Sprint itself? Yes.
6 Q What is the basis for that?
7 A Sprint is holding itself out as a common
8 carrier. We are providing both exchange access
9 services as well as services to Time Warner Cable
10 that we think falls within that definition.
11 Q To whom are you providing exchange access
12 in that context that you were just describing?
13 A To Time Warner Cable end users, to Time
14 Warner Cable, depending on who you see that customer
15 being to AT&T, to MCI, anybody else who terminates a
16 long distance call to a Time Warner Cable subscriber.
17 Q Section 10.16 of the agreement, if you can
18 refer to that on Page 23 and 24. Addresses rural
19 exemptions, does it not?
20 A Yes.
21 Q And, in fact, you addressed rural exemptions
22 at Page 5, Line 4 through 17, of your direct
23 testimony, didn't you?
24 A I addressed it someplace. I will take your
25 word for that.

1 Q This Section 10.16 of the agreement provides
2 that Sprint will make efforts, quote, to negotiate
3 interconnection and other necessary agreements with
4 any ILEC that provides services to TWC homes past,
5 end of quote. In this regard, will Sprint request to
6 negotiate interconnection arrangements with ILECs
7 pursuant to Section 251(c) of the Act?
8 A Yes. We discussed this a little bit before,
9 limiting C to the interconnection terms and
10 conditions.
11 Q As I said, you have discussed on Page 5 of
12 your testimony, the rural exemption, under the 1996
13 Act. Could you please specifically identify which
14 aspect of the rural exemption provided in Section
15 251(f) of the Act to which you refer at Lines 10
16 through 12 on Page 5?
17 A 251(f)(1) actually what I -- let me just
18 check. (Pause) 251(f)(1).
19 Q So, just to be clear, is it Sprint's
20 position that when it seeks an interconnection
21 arrangement with a rural ILEC, that it will comply
22 with Section 251(f)(1)(b) of the Act by giving notice
23 of the BFR to this Commission?

24 A Yes.
25 Q And, thereafter, will it be the intention of

1 Sprint, if we ever reach that point, to participate
2 in an inquiry to determine whether the exemption
3 under 251(f)(1)(a) should be terminated?
4 A Yes.
5 Q Let me check. I may be able to avoid any
6 more references to the agreement. We may be able to
7 bring people back.
8 A Okay.
9 COMR. LANDIS: Let me know when you are
10 moving off of that area.
11 MR. SCHUDEL: I think I am, but just in the
12 interest of, what shall I say, trying not to have
13 people shuffling back and forth. Maybe Mark should
14 be given the opportunity if he has questions --
15 COMR. LANDIS: Mark, and then I am wondering
16 whether we should give Monica some redirect at that
17 time just so we clean the decks before we get
18 everybody back.
19 MR. FAHLESON: Just a couple of questions,
20 and ask those -- I have a couple -- I have like eight
21 questions -- so, if we can get those out of the way
22 and then give it to Monica if that is okay.
23 COMR. LANDIS: Okay, let us do that.
24 MR. FAHLESON: Sir, I just have a few
25 questions.

1 CROSS-EXAMINATION

2 By Mr. Fahleson:

3 Q In reference in your testimony, it is really

4 clear that there is currently an agreement between

5 Sprint and Time Warner. Is that correct?

6 A That is correct.

7 Q Okay, and that has been introduced into

8 evidence as Exhibit 8. What other Nebraska cable

9 companies or cable companies operating in Nebraska

10 are you currently negotiating with?

11 A The --

12 MS. BARONE: Objection. That is proprietary

13 business information. It goes to what our

14 negotiations -- what other negotiations are going on

15 right now. It is outside the scope of this

16 proceeding.

17 COMR. LANDIS: Oh, I think it is within the

18 scope of the proceeding. I am just wondering if you

19 don't want it submitted under seal or something. Let

20 me ask, Ms. Melton.

21 MS. MELTON: We are currently at a

22 confidential portion of the record anyway, and this

23 portion of the record will be confidential and

24 treated under the protective order.

25 MR. SCHUDEL: I didn't expressly say that,

1 but that was my intention that we would, you know,
2 designate this portion as confidential.
3 MS. BARONE: It concerns me if we go into
4 business plans and we may even have prohibitions in
5 revealing that information which I don't have access
6 here. Other attorneys negotiate those agreements,
7 and there may be prohibitions in terms of what they
8 can reveal right now because that is sensitive and
9 proprietary business relationships. I think we are
10 going beyond the scope of what is necessary for
11 certification. We are going into what are Sprint's
12 business plans in the future, and that is way beyond
13 the scope of this proceeding.
14 MR. FAHLESON: I respectfully disagree. My
15 follow-up question is going to be dealing with the
16 arrangements, whether those arrangements are going to
17 be similar to what they are doing with Time Warner.
18 It is going -- if they call it a certain model,
19 whether it is going to be under a different model or
20 the same model. I think we have the right to know
21 whether that is going to be a different model
22 throughout the rest of the state of Nebraska or the
23 same model. 0717
24 COMR. LANDIS: Can't you ask that question
25 without knowing specifically what companies are

1 currently involved? I mean, your interests is --
2 treated the same, I think.
3 MR. FAHLESON: Okay.
4 COMR. LANDIS: I think you can get what you
5 want without knowing specifically what company is
6 being involved here --
7 MR. FAHLESON: Okay.
8
9 By Mr. Fahleson:
10 Q In Exhibit 7, in response to Question Number
11 5 in a non-confidential response, you at least
12 identified the USA companies as a company you are
13 currently negotiating with. Is that correct?
14 A We actually have a contract with USA
15 companies.
16 Q For what parts of Nebraska does that cover?
17 A I can't name the exchanges, but it is
18 around Central City.
19 Q Does that contract -- is it on the same
20 model or principles of the Time Warner agreement?
21 A There is one difference.
22 Q What is that?
23 A Let me try to explain -- this may take a
24 couple of minutes. We have two models right now that
25 we are pursuing with the cable companies. One model

1 is like the Time Warner Cable model in which Time
2 Warner Cable has some of their own switching
3 functionality. They actually have a switch of their
4 own. The other model is where the cable company has
5 no switching functionality whatsoever of their own.
6 It is done entirely by Sprint. The contract with USA
7 companies is one in which Sprint has all of the
8 switching functionality. In the context of what we
9 have been discussing as far as interconnection,
10 inter-carrier compensation, etc, they are
11 fundamentally the same.
12 Q And, regardless of which model you use in
13 the state of Nebraska, Sprint's relationship with the
14 end user customers is the same, correct, meaning no
15 relationship?
16 A As I stated, for our current contracts, yes.
17 I don't want to speculate as to what might happen in
18 the future, but our current contracts, yes.
19 Q So, with respect to the USA companies
20 contract, your contact or relationship with the end
21 user customer is the equivalent of that under the
22 Time Warner contract.
0719
23 A Yes.
24 Q Both in the prefiled testimony and
25 elsewhere, you and Sprint's other witness have used

1 the term enabler. Would you agree with me that your
2 use of the term enabler is synonymous with wholesale
3 telecom or telecommunications service provider?
4 A Enabler probably goes broader than that.
5 Getting into the definitions of telecommunications
6 services, etc., there are other functions that we
7 perform for the cable companies that probably are not
8 considered telecommunications services.
9 Q Does your use of the term, enabler, involve
10 any provisioning of the service directly to an end
11 user customer?
12 A When you mean provisioning, are we involved
13 in the provisioning of the service?
14 Q Direct contact with the customer.
15 A No direct contact with the customer, no.
16 Q You would agree with me that at least under
17 your Time Warner agreement, Sprint has no obligations
18 with respect to customer service to the end user
19 customer. Correct?
20 A Time Warner Cable is the customer's point of
21 contact for customer service issues.
22 Q So, your answer would be that --
23 A We don't have contact with the customer for
24 customer service purposes, correct.
25 Q Time Warner, under this model, is ultimately

1 responsible for customer service to the end user
2 customer. Correct?
3 A Correct. I might just add again for
4 clarification, they have that ultimate
5 responsibility. There are obviously some of the
6 services that we provide that they would rely on in
7 providing that service, that customer service.
8 Q Right. But, again --
9 A They have customer contact.
10 MR. FAHLESON: I have no further questions.
11 COMR. LANDIS: All right. I think we -- if
12 you want to redirect this testimony with respect to
13 the confidentiality, let us do it now. Is that
14 agreeable to you?
15 MS. BARONE: That is fine.
16
17 REDIRECT EXAMINATION
18 By Ms. Barone:
19 Q I was just going to ask you one question.
20 It is really not confidential. The response probably
21 won't be confidential, but you have been asked
22 several times regarding the agreements. Whether the
23 agreements between cable partners are going to be the
24 same. Isn't that really going to depend on the
25 individual company and the relationship with that

1 company?

2 A Yes.

3 MS. BARONE: That is all I have.

4 COMR. LANDIS: We will go off the record for

5 a minute.

6 (Off the record)

7 COMR. LANDIS: Back on the record. Mr.

8 Schudel is handling cross-examination at this point.

9 MR. SCHUDEL: Mr. Burt, I have a few

10 questions with regard to the amended application. I

11 might say in pursuing those, obviously, we have an

12 objection which the Commissioner overruled. I am

13 pursuing these without waiving our position earlier

14 stated.

15 COMR. LANDIS: Understood.

16

17 RECROSS-EXAMINATION

18 By Mr. Schudel: 0722

19 Q If you wish to refer to the amended

20 application, which is Exhibit 2, Paragraph 17, on

21 Page 5, therein Sprint states, quote, prior to

22 providing local switched service, Sprint will make

23 the appropriate filing with the Commission describing

24 the terms and conditions under which it will provide

25 such services including any required advance payments

1 and/or deposits, end of quote. In this statement,
2 what is meant by, quote, appropriate filing?
3 A Well, I am going to generally say that -- I
4 can't quote the specific rules, but anything that
5 this Commission requires that we file, we are willing
6 to file. If you have a specific example, I would be
7 glad to address that.
8 Q I can't give you an example on the context
9 of what your own application is. I am just trying to
10 understand what was meant by this.
11 A We will comply fully with the rules.
12 Q To your understanding, does that mean a
13 tariff?
14 A If Sprint is providing a retail service that
15 requires a tariff, then, yes, we would provide a
16 tariff.
17 Q Currently, today, does Sprint intend to make
18 any filing with the Commission describing its service
19 offerings in connection with its enabler activities?
20 A A --
21 MS. BARONE: Asked and answered earlier.
22 COMR. LANDIS: Answer the question.
23 MR. BURT: Ask it again, please.
24 0723
25 By Mr. Schudel:

1 Q Currently, as of today, does Sprint intend
2 to make any filing with the Commission describing its
3 service offerings in connection with its enabler
4 activities?
5 A What type of filing?
6 Q Any.
7 A I am not aware of any that are required. If
8 any are requested, we will comply.
9 Q In your testimony on Page 4, Lines 3 through
10 7, which we talked about before in some degree, you
11 state that Sprint evaluates market entry alternatives
12 and that statewide certification shortens market
13 entry intervals. You specifically state that, quote,
14 it is in Sprint's best interest to be certified on a
15 statewide basis, end of quote. Isn't that correct
16 that that is what you stated?
17 A That is what I stated, yes.
18 Q Can you identify for me in Commission Rule
19 002.49 which is why we are here today governing CLEC
20 certification where the best interests of the
21 applicant are required to be considered by this
22 Commission?
23 A I am going to make an assumption that it is
24 not there. What Sprint is seeking is the same
25 statewide certification that has already been granted

1 to 50 or so other companies.

2 MR. SCHUDEL: You have answered my -- excuse

3 me. I would like to move that stricken after he

4 answered my question.

5 COMR. LANDIS: It will be stricken.

6

7 By Mr. Schudel:

8 Q As you continue your testimony on Page 4,

9 Line 11 through Page 5, Line 1, aren't you

10 effectively stating to the Commissioners that it is

11 more convenient than not to Sprint to have statewide

12 certification at this time so that you can enter into

13 other enabler transactions with other cable

14 companies?

15 A What were the line numbers again?

16 Q Four eleven through five one.

17 A No. Again, I think we covered this before,

18 but on Line 12, I am talking about a retail service.

19 MR. SCHUDEL: Let me allow you to just

20 answer my question.

21 COMR. LANDIS: Let him answer the question

22 and then --

23 MR. SCHUDEL: Well, it was a yes or no

24 question, and he did. So, I would ask that the

25 answer after his answer no be stricken.

1 COMR. LANDIS: We are going to leave his
2 answer in as it currently stands.
3
4 By Mr. Schudel:
5 Q At Lines 17 through 20 on Page 4, you
6 describe that Sprint is in various stages of
7 negotiations, and that timely market entry is
8 important. You state, quote, therefore, having
9 statewide certification is important to meet this
10 goal. Isn't that correct?
11 A I state that, yes.
12 Q Now, you just were about to tell me about
13 these other 50 applications. So, let us go there.
14 Page 5, Lines 1 and 2. You claim that Sprint only
15 seeks, quote, the same authority previously granted
16 to over 50 companies in the state of Nebraska, end of
17 quote. Can you name for me even one certificated
18 CLEC that sought certification in Nebraska for
19 wholesale provision of services to other carriers?
20 A Yes.
21 Q Who would that be? 0726
22 A A company by the name of Intrado.
23 Q And, you have the certification number of
24 the application to which you refer.
25 A C-2647.

1 Q In the existing certification granted by
2 this Commission, Sprint in C-1386, it is correct,
3 isn't it, that your company was not granted wholesale
4 enabler certification? Isn't that true?
5 A My understanding that that was a certificate
6 of public convenience and necessity.
7 Q Okay.
8 A Whatever that entails.
9 (Intervener Exhibit Number 10 was marked for
10 identification)
11
12 By Mr. Schudel:
13 Q Handing to you what has been marked as
14 Exhibit 10, which is identified as the order entered
15 by this Commission in C-1386, do you recognize that
16 document?
17 A Yes. I have not read it completely, but
18 that is what this document is.
19 Q So, in conjunction with your statement on
20 Page 5, Lines 1 and 2, that your company was seeking
21 the same authority granted to over 50 other
22 companies, you didn't even read your own company's
23 prior grant of certification. Is that your
24 testimony?
25 A Like I said, I recognize it as a document

1 that you stated. I will be happy to address anything
2 included in the document.
3 (Intervener Exhibits 11 and 12 were marked
4 for identification)
5
6 By Mr. Schudel:
7 Q Handing you what has been marked as
8 Exhibits 11 and 12, Exhibit 11 is a copy of the
9 Commission's order in the certification of AT&T as a
10 CLEC. Did you have occasion to review that order
11 before testifying today?
12 A I have looked at one AT&T order. I don't
13 know if there is more than one.
14 Q Do you remember reviewing that order before
15 today?
16 A Let me just -- I have looked at part of this
17 order, yes, C-1298.
18 Q And, if you will refer to Exhibit 12, which
19 is the MCI CLEC order, did you have occasion to
20 review that order?
21 A I have not reviewed the MCI order.
22 MR. SCHUDEL: I don't believe I made an offer
23 but I would offer Exhibits 10, 11, and 12 at this
24 time.
25 MS. BARONE: Are you offering them for

1 administrative notice or as evidence in this case?
2 If you are offering them as evidence, I will move to
3 or I would object to these being offered as evidence
4 in this case. It is all for the truth of the matter
5 contained in these documents.
6 MR. SCHUDEL: Whether it is by judicial
7 notice or by this witness' testimony at least as to
8 10 and 11 which he said he read at least in part, the
9 offer stands.
10 COMR. LANDIS: We are going to admit Exhibits
11 10, 11, and 12. That was raised in your direct
12 testimony -- rebuttal -- relevance here, and we are
13 going to go ahead and admit those exhibits.
14 (Intervener Exhibits Number 10, 11 and 12
15 were received in evidence. See Supp. Volume)
16
17 By Mr. Schudel:
18 Q Referring back to your testimony, Page 7,
19 Lines 9 through 11, you state that, quote, wholesale
20 service has always been a significant segment to
21 Sprint, end of quote. Has the applicant in this
22 proceeding, this legal entity that is applying today,
23 provided any wholesale local exchange services in
24 Nebraska prior to today?
25 A I, subject to check, I would say that Sprint

1 Communications Company LP has provided wholesale
2 services in Nebraska.
3 Q To whom?
4 A I can't identify -- I just want to clarify
5 my response. Wholesale services that I am talking
6 about here go beyond the scope of the wholesale
7 services that I am talking about with Time Warner
8 Cable or USA companies.
9 Q For example, interexchange service or
10 wireless service?
11 A Interexchange -- yes.
12 Q That is why I specifically asked the
13 question as I did because I assumed that, but, I
14 guess my question, my follow-up to your believe that
15 the answer was yes, would those then have been
16 offered -- those wholesale local exchange services
17 have been offered in the previously certificated
18 service area under C-1386, which would be Qwest,
19 ALLTEL, United, now Citizens --
20 A Well, if it is wireless, it would be where
21 we are licensed. We are not certified to provide
22 wireless. If it is --
23 Q But my question was local exchange services.
24 I was trying to get us back on that track.
25 A We -- well, let us be clear. To this point

1 in time, we have not provided wholesale services that
2 we are trying to provide for the cable companies at
3 this point in time.
4 Q That was my first question. Thank you. At
5 Page 7, Lines 19 through 22, you generally describe
6 the services that Sprint proposes to provide to Time
7 Warner as an enabler. Correct?
8 A Generally, yes.
9 Q Without those services, Time Warner cannot
10 provide the service that it proposed in Application
11 C-3228. Isn't that correct?
12 A I --
13 MS. BARONE: Objection. Calling for a
14 question regarding what Time Warner can or cannot do.
15 This proceeding is about what Sprint is providing.
16 COMR. LANDIS: That is overruled. Answer the
17 question.
18 MR. BURT: If Time Warner Cable doesn't get
19 the aspects of the service that Sprint provides from
20 Sprint, they would have to do it themselves or they
21 would have to get it from some other entity.
22
0730
23 By Mr. Schudel:
24 Q Unless they did that, they couldn't provide
25 the service they propose in C-3228. Isn't that

1 correct?

2 A I would say that the basis of --

3 MR. SCHUDEL: Excuse me. I am asking a yes

4 or no --

5 COMR. LANDIS: Let us ask the question one

6 more time, and then be as responsive as you can.

7 MR. BURT: I am trying to.

8 COMR. LANDIS: Let us keep this on a civil

9 level here.

10

11 By Mr. Schudel:

12 Q Without these services that you describe at

13 Page 7, Lines 19 through 22, of your direct

14 testimony, and as you stated, unless Time Warner

15 obtained those from a third source or somehow

16 provided them themselves, Time Warner could not

17 provide the services to the end users that it

18 proposes in its application. Isn't that correct?

19 A Time Warner Cable is relying upon Sprint to

20 enable them to provide their local and long distance

21 voice service.

22 MR. SCHUDEL: I have no further cross.

23 COMR. LANDIS: Mr. Fahleson?

24 MR. FAHLESON: No further cross.

25 COMR. LANDIS: All right. Ms. Barone, any

1 redirect?

2 FURTHER REDIRECT EXAMINATION

3 By Ms. Barone:

4 Q On that last line of questioning, when you

5 were asked whether Time Warner could provide services

6 without the services Sprint is going to provide, you

7 don't know one way or the other whether they could or

8 not, do you?

9 A Not really.

10 Q They could go to another carrier and get

11 that. Correct?

12 A They could go to another carrier.

13 Q And, you don't know if they have all of the

14 mechanisms in place to provide those services or not,

15 do you?

16 A No, I don't.

17 Q You don't work for Time Warner, do you?

18 A No, I don't.

19 Q You work for Sprint. Correct?

20 A That is correct.

21 Q And, the application before us today is

22 Sprint's application for statewide certification.

23 Correct?

24 A That is correct.

25 Q Are you aware that Qwest Corporation has

1 statewide certification in Nebraska?

2 A Yes, I am.

3 MR. SCHUDEL: I object, and move that answer

4 be stricken. It clearly goes beyond the scope of

5 anything I asked on cross.

6 COMR. LANDIS: I think this Qwest authority

7 probably is beyond the scope of the --

8 MS. BARONE: You asked about statewide

9 certification, and he brought in several and he asked

10 about --

11 MR. SCHUDEL: I never brought up Qwest once.

12 MS. BARONE: But you asked for statewide

13 certification which opens the door for statewide

14 certification.

15 COMR. LANDIS: I will sustain the objection.

16

17 By Ms. Barone:

18 Q Now, Mr. Burt, just finally, the reason

19 Sprint is seeking statewide certification is twofold.

20 One is to provide -- to be able to provide retail

21 services in the future, and also support the

22 wholesale product that you described today. Correct?

23 A If --

24 MR. SCHUDEL: I am going to object to that

25 question because as has already been stated -- shown

1 both in the answers to the data request and the
2 prefiled testimony, that is not his testimony. This
3 whole concept of retail service is an after the fact
4 situation that was never mentioned, never mentioned,
5 in this testimony.
6 MS. BARONE: It is all in his testimony. You
7 are --
8 MR. SCHUDEL: Point me to the line, please.
9 MS. BARONE: We talked about it. He
10 testified on cross-examination regarding the retail
11 services on what it meant on Page 4 at Lines 12
12 through 14. He testified to that.
13 COMR. LANDIS: Line what?
14 MS. SCHUDEL: Twelve through 14, Mr.
15 Commissioner, and there is absolutely no mention
16 whatsoever of retail service there, none.
17 MS. BARONE: I think we are going -- he has
18 answered that question and we will leave it at that.
19 Local market entry alternatives.
20 COMR. LANDIS: I am going to sustain the
21 objection. We had your testimony. Any other
22 questions? Redirect?
23 MS. BARONE: No, thank you.
24 COMR. LANDIS: Okay. Ms. Melton, do you have
25 any questions from the staff?

1 MS. MELTON: Just a few.

2

3 INTERROGATION

4 By Ms. Melton:

5 Q Has Sprint made any bona fide requests

6 for interconnection to date?

7 A To rural companies?

8 Q To rural companies.

9 A There has been some correspondence between

10 Sprint and Southeast Nebraska. The latest

11 correspondence was from Southeast to Sprint. They

12 claim that that -- what Sprint requested was not a

13 bona fide request, and that they didn't see a need to

14 enter into negotiations until we are certified or are

15 seeking certification. We intend to submit that bona

16 fide request I am going to say within the next

17 several days.

18 Q Do you intend to file with the Commission

19 any agreement entered into with rural or other

20 carriers with respect to handling local traffic?

21 A The interconnect -- yes. We would submit

22 those interconnection agreements for approval by the

23 Commission, yes. 0735

24 Q I believe it was your testimony that you do

25 not believe that the rural exemption is an

1 appropriate issue to be raised at this time, during
2 this proceeding.
3 A I would agree with that. It is not
4 appropriate at this time.
5 Q When would you anticipate that rural
6 exemption issue being --
7 A Per the Telecom Act, once we submit the
8 bona fide request to the rural company. Then, it is
9 incumbent upon them to try to invoke their rural
10 exemption status which would result in a proceeding
11 before this Commission.
12 Q Are there any agreements that you would
13 anticipate entering into with rural carriers that
14 would not be brought before this Commission -- would
15 not be filed with the Commission?
16 A I can't think of any off of the top of my
17 head. No, I can't think of any.
18 Q Does Sprint intend to provide any IP
19 services itself in the area for which you are seeking
20 certification for, IP --
21 A Oh, Voice over IP? We have no current plans
22 to do so. 0736
23 Q And, does Sprint intend to collect and remit
24 to Universal Service charges to the Commission?
25 A It is federal or state?

1 Q The state.

2 A The state. It is my understanding that the

3 state fees are based on retail revenues. So, to the

4 extent Sprint would have retail revenues, then, yes,

5 we would.

6 MS. MELTON: That is all I have.

7 COMR. LANDIS: Do you have any clean-up

8 questions after the staff?

9 MS. BARONE: No.

10 COMR. LANDIS: All right. Commissioner

11 Johnson, do you have any questions of this witness?

12 COMR. L. JOHNSON: No.

13 COMR. LANDIS: I have no questions. You are

14 excused, Mr. Burt. Thank you for your testimony

15 today and your patience. It has been a long day for

16 you.

17 (Witness is excused)

18 MR. BURT: Thank you.

19 COMR. LANDIS: Let us take about a six minute

20 break here.

21 (Off the record)

22 COMR. LANDIS: Back on the record. I think

23 there was some questions in your mind about what was

24 admitted and what was not. With respect to Exhibit

25 4, which was the prefiled testimony of Mr. Burt,

1 well, we are admitting everything in his testimony
2 that we haven't previously on the record sustained an
3 objection to. Is that sufficient for your purposes?
4 (Applicant Exhibit Number 4 was received in
5 evidence. See Supp. Volume)
6 In other words, there was several lines of
7 pages and lines that we did not sustain the
8 objection. There were several that we overruled the
9 objection to. So, it is only what -- we are only
10 admitting those objections that we overruled. I
11 think that states what we have done here. Are there
12 any objection to Exhibit 6? That will be admitted
13 into evidence. Do you want to be heard on Exhibit 9?
14 (Intervener Exhibit Number 6 was received in
15 evidence. See Supp. Volume)
16 MS. BARONE: I would just make sure that --
17 can we take official notice of all the Commission's
18 Rules? That way, we don't have to go through this
19 process.
20 MR. SCHUDEL: That is all right with me.
21 When you say all the rules, are you talking about the
22 telecom rules or which rules?
23 MS. BARONE: The procedures as well as the
24 telecommunications rules.
25 MR. SCHUDEL: Okay.

1 COMR. LANDIS: That is judicial notice of all
2 of the Commission rules of procedure and rules
3 dealing with telecom. Anything else you show that
4 has not been -- yes, we are accepting Exhibit 9.
5 (Intervener Exhibit Number 9 was received in
6 evidence. See Supp. Volume)
7 MS. BARONE: May I ask one question? Is the
8 prehearing order identified as an exhibit?
9 COMR. LANDIS: I think we made that Exhibit
10 3, didn't we? I think we put that in because it is
11 notice of the hearing we are having today, yes.
12 MS. BARONE: Thank you.
13 COMR. LANDIS: That is in the record, in the
14 evidence. Okay. Does that take care of everything,
15 Exhibit 1 through 12? Okay.
16 (Dr. Staihr was sworn in by Commissioner
17 Landis)
18 COMR. LANDIS: Very well, sir. Will you
19 state and spell your name for the court reporter?
20 DR. STAIHR: My name is Brian K. Staihr,
21 B-r-i-a-n K. S-t-a-i-h-r.
22 (Applicant Exhibit Number 5 was marked for
23 identification)
24

1 DR. BRIAN K. STAIHR
2 Testifies as follows on:
3 DIRECT EXAMINATION
4 By Ms. Barone:
5 Q Dr. Staihr, by whom are you employed, and in
6 what capacity?
7 A I am employed by Sprint Corporation and I am
8 Senior Regulatory Economist.
9 Q Do you have a copy of your prefiled
10 testimony that has been previously marked as Exhibit
11 5?
12 A Yes, I do.
13 Q Do you have any corrections to your
14 testimony?
15 A I have just one correction. A little one on
16 Page 9. It is on Line 8. The word that is currently
17 on the page is inefficiency. The word it should be
18 is efficiency.
19 Q With that correction, if I were to ask you
20 the questions contained in your prefiled testimony
21 today, would your answers be the same?
22 A Yes, they would.
23 MS. BARONE: Commissioner Landis, I would ask
24 that Dr. Staihr's Exhibit 3 be admitted into evidence
25 at this time.

1 MR. SCHUDEL: And, I will follow the same
2 procedure as before. I would object, and I don't
3 know that we have an alternative other than the
4 recommendation of Angela. I would be happy to
5 distribute, as I did before, my list of objections if
6 you wish to proceed in that way.
7 COMR. LANDIS: Okay. We will go off the
8 record for just a minute and we will talk about how
9 we want to handle this.
10 (Off the record)
11 COMR. LANDIS: Back on the record. So, that
12 it is clear in the record, what we have before us is
13 Dr. Staihr's prefiled testimony. At this point, we
14 are going to admit into evidence all of his prefiled
15 testimony excepting those portions which we have
16 objections to and which may or may not be sustained.
17 So, those are the only parts of this evidence that is
18 in question at this point. Then, we will go through
19 and we will take the language that is in question.
20 The language will be read by the witness and then Mr.
21 Schudel or Mr. Fahleson will pose their objections.
22 Ms. Barone can answer that. We are going to rule on
23 it and then move to the next portion of his testimony
24 that Mr. Schudel finds objectionable. Is that -- are
25 we all in agreement on that? Ms. Melton, do you

1 think that -- rather than taking another break and
2 going and listening to -- so, back on the record, and
3 so, let us go first. I think we ought to put Mr.
4 Schudel's list of objections by page and line in the
5 record.
6 MS. BARONE: I thought we were going to do
7 that -- after I ask the question, he reads the
8 answers, then, this --
9 COMR. LANDIS: Okay, whatever. I just want
10 it clear at some point exactly what we are talking
11 about here. Let us go ahead with the first one,
12 which is Page 4, Line 6 through Line 18.
13
14 By Ms. Barone:
15 Q The question, Dr. Staihr, is when
16 considering Sprint's application, what should the
17 Commission look for as general guiding principles?
18 A Following the passage of the 1996 Telecom
19 Act, this Commission --
20 MR. FAHLESON: I just wanted to -- my
21 objection for the record at this time. I object to
22 the extent that Dr. Staihr is going to testify about
23 legal conclusions, legal matters, which represent
24 hearsay which are not properly before this
25 Commission. So, that any reference to what this

1 Commission decided or previous FCC orders or ruling.
2 MR. SCHUDEL: Just so I don't interrupt him
3 all the time, I am going to put my objection at the
4 close of his testimony, you know, the portion, and
5 move to strike, so, that way, we can get them into
6 the record.
7 COMR. LANDIS: Okay. All right, go ahead.
8 DR. STAIHR: Following the passage of the
9 1996 Telecom Act, this Commission in 1997 stated its
10 intentions to embrace and adopt the pro-competitive
11 policies of the Federal Telecommunications Act of
12 1996 because of the strong likelihood that benefits
13 would flow from a competitive environment. These
14 pro-competitive policies were succinctly stated by
15 the FCC in its First Report and Order in DD Docket
16 96-98, the Local Competition Order, when the FCC
17 affirmed that, in implementing the Act, its goal was
18 not only to remove impediments to competition, but to
19 affirmatively promote effective competition rather
20 than perpetuate a system of shielding telephone
21 companies from competition and protecting them
22 against competitive entry. As the Commission
23 considers Sprint's application, it should be guided
24 by the FCC's acknowledgment that the regulation of
25 telecommunications has undergone, in the FCC's words,

1 a fundamental change since the 1996 Act.

2 MR. SCHUDEL: At this point, then, I would

3 interpose my objection to Lines 6 through 18 that Dr.

4 Staihr has just read. I would state that objection

5 on the irrelevancy of the testimony. Also, upon the

6 recitation of legal authorities. Obviously, this

7 reads like a legal brief. The controlling Nebraska

8 law is that, as I cited this morning, in the case of

9 Heistand vs. Heistand, 267 Neb. 300, expert testimony

10 concerning a question of law is generally not

11 admissible. Furthermore, in the case of Schafersman

12 vs. Agland Co--op, 262 Neb. 215, which is the case in

13 which our Nebraska Supreme Court adopted the so-

14 called Daubert Standard which is a well known

15 standard under Federal Rule of Evidence and State

16 Rule of Evidence 702 whereby the use of expert

17 testimony is to be judged and limited. The court

18 said following under the standard of helpfulness

19 required by Nebraska Evidentiary Rule 702, the court

20 may exclude an expert's opinion which is nothing more

21 than an expression of how the trier of facts should

22 decide a case or what result should be reached on any

23 issue to be resolved by the trier of fact.

24 Certainly, by reading from these -- the former

25 opinion of this Commission as well as the FCC First

1 Report and Order as it is disposed in the footnotes,
2 as Mr. Fahleson pointed out, this is nothing more
3 than a recitation of legal authority.
4 MR. FAHLESON: We would join in that
5 objection.
6 MS. BARONE: As Dr. Staihr's testimony
7 reveals, he is in the policy group within Sprint and
8 he works with and reviews the Telecommunications Act
9 and rules and orders of Commissions throughout the
10 country which enables him to make policy decisions
11 for Sprint. He is merely citing an opinion of this
12 Commission, and the opinions of the FCC upon which
13 this Commission can take judicial notice, and also
14 upon which Dr. Staihr can make a policy or assert his
15 policy decisions. Therefore, this is not improper.
16 He is not drawing a legal conclusion. He is making a
17 policy statement based on the policies enumerated in
18 the FCC's order as well as the Commission's order. I
19 will ask that you take judicial notice of those
20 orders.
21 MR. SCHUDEL: Now, she is making another
22 offer. I don't know if she intended to offer the
23 First Report and Order. If she is, I will speak to
24 that, but I think that is a separate issue.

25 COMR. LANDIS: Okay. I think in this case,

1 you are an expert in the area of economics, a PhD in
2 economics. I think this is -- this testimony here
3 really goes to legal matters more than matters
4 dealing with economics. I think in light of that, we
5 are going to sustain the objection to your testimony
6 found on Page 4 and on Lines 6 through 18 ending with
7 the 1996 Act. We will strike that testimony. Now,
8 where do we move from there?
9 MR. SCHUDEL: The next objection was to the
10 following sentence, if Dr. Staihr wants to read that.
11 DR. STAIHR: While it is understandable that
12 an incumbent local telephone provider might prefer
13 not to have the local market open to competition,
14 such a market environment is clearly contrary to the
15 pro-competitive policies this Commission referred to
16 in 1997.
17 MR. SCHUDEL: My objection as shown in the
18 sheet that I handed out is that that testimony which
19 focuses on what an incumbent local telephone provider
20 unnamed as to specifically who might prefer lacks
21 proper and sufficient foundation. It is speculative
22 because this witness, as he has already testified,
23 works for Sprint, not for, quote, an other incumbent
24 local and telephone company provider. It is improper
25 legal conclusion which should not be accepted for the

1 reasons I earlier stated with reference to the cases
2 I cited.
3 MS. BARONE: Still, again, these are --
4 although Dr. Staihr is an economist and he works in
5 the Regulatory Policy Group, he is not defined
6 specifically as an economist. He advises the
7 corporation on policy issues based on decisions of
8 the FCC and Commissions in his job. Based on his
9 experience in the industry, he is able to make these
10 statements. That is why he has been proffered here
11 today.
12 COMR. LANDIS: Okay. With respect to the
13 objection on Dr. Staihr's testimony found on Lines 18
14 to 21, I am going to overrule the objection. That is
15 basically dealing with market, the marketplace, and
16 that is what we expect a Phd in economics to
17 understand. Page 5, Lines 2 through 5.
18 DR. STAIHR: Has this Commission identified
19 the benefits of such competition? Yes. The benefits
20 of such competition that this Commission cited in the
21 1997 Opinion and Finding include, but are not limited
22 to, improved efficiency, accelerated deployment of
23 innovations, improved customer service, and
24 additional choices for consumers.
25 MR. SCHUDEL: And, the objections on my sheet

1 or recitation of legal authority, the entirety of the
2 sentence he just read is premised upon the C-1386
3 decision which, as an aside, is in the record. So,
4 to the extent that it is any help to the Commission,
5 this testimony is not needed. It is duplicative.
6 MS. BARONE: I don't see a reason to strike
7 it if it is merely citing to something that is
8 already in the record. It takes it out of context
9 and it takes his testimony out of context. I would
10 ask that it remain in.
11 MR. FAHLESON: We will join Mr. Schudel's
12 objection. I will also note that had Dr. Staihr said
13 it is my opinion as an economist that the benefits of
14 competition are quite -- he didn't do that. What he
15 said was he was quoting hearsay testimony or orders
16 of this Commission. It was insufficient foundation
17 for that.
18 MS. BARONE: He is merely citing the
19 authority of the Commission.
20 COMR. LANDIS: Again, I think this is
21 testimony that deals with economics and the
22 marketplace and competition. We are going to let
23 that, and, as a matter of fact, that order, as Mr.
24 Schudel points out, is part of the record today. So,
25 we are going to overrule the objection, the language

1 found on Page 5, Lines 2 through 5. So, we will --
2 ending with the phrase, choices for consumers. The
3 next language and questions found on Page 11, Lines
4 11 through 14.
5 DR. STEIHR: To the extent that the
6 Commission has granted CLEC applications for over 50
7 other carriers upon demonstration of sufficient
8 financial resources, sufficient technical competency
9 and sufficient managerial resources, it is in the
10 public interest that the Commission should do so for
11 Sprint.
12 MR. SCHUDEL: And, I object to that testimony
13 and move to strike it on the basis that it lacks
14 proper and sufficient foundation. Other than the
15 orders that were offered and received previously,
16 none of these 50 so-called precedential orders are
17 included in the record. This assumes facts not in
18 evidence concerning those, and it is hearsay as
19 relates to these supposed 50 applications and that
20 there can be adduced from those 50 applications that
21 Sprint's application is in the public interest.
22 There is no precedent tie whatsoever there.
23 MR. FAHLESON: We join in that objection.
24 MS. BARONE: This has already been admitted
25 into the record. Therefore, there is no need to

1 strike this at this time. Dr. Staihr certainly can
2 reference those other applications and counsel for
3 the interveners can make its legal arguments in its
4 brief.
5 MR. SCHUDEL: And, I might just add, because
6 you made the ruling in Mr. Burt's case, this is being
7 offered for an entirely different purpose. He is
8 tying it to public interest, and Mr. Burt didn't even
9 testify on public interest. So, my objection stands.
10 It is not proper under these circumstances that I
11 described before.
12 COMR. LANDIS: Okay. I am going to sustain
13 the objection here. I am not sure this has anything
14 to do with economics. The determination of public
15 interest is something this Commission is going to
16 have to determine. In any event, the objection is
17 sustained and the -- Mr. Staihr's testimony found on
18 Page 11, Lines 11 through 14, will be stricken from
19 the record. Now, let us move to the same page to
20 Lines 16 through 23.
21 DR. STAIHR: Second, because this Commission
22 is charged with promoting diversity in the supply of
23 telecommunications services by the Nebraska
24 Legislature, we must assume that the Commission's
25 decision to embrace and adopt the pro-competitive

1 policies of the 1996 Act is consistent with this
2 legislative mandate and therefore in the public
3 interest. Because those policies go beyond merely
4 allowing competition to promoting competition, and
5 because granting Sprint's certificate will enable the
6 provision of competitive local telephone service in
7 Nebraska, granting Sprint's application is in the
8 public interest.
9 MR. SCHUDEL: And, I object to that and move
10 that those lines be stricken based upon the lack of
11 proper and sufficient foundation. He is quoting from
12 or referencing to the legislative policies of this
13 state. Again, that is legal, and that is not
14 economic. He suggests that there is a necessary tie
15 between legislative policy and the Commission's
16 decision, unnamed decision, by the way, so, there
17 isn't any foundation laid for what he is referring
18 to. It is speculative testimony.
19 MR. FAHLESON: Join in the objection and note
20 perhaps the word being focused on is we must assume.
21 So, what he is asking is an assumption based upon
22 some Commission decision which is his legal
23 interpretation, but there is insufficient foundation
24 for it.

25 MS. BARONE: And, as counsel for interveners

1 noted earlier, Dr. Staihr is an economist and he is
2 testifying on the public interest. He need not --
3 and, he is also a policy witness in this case.
4 Therefore, he need not be restricted to just theories
5 of economics. He certainly can cite to legislation
6 in his opinion with regard to whether this
7 application is in the public interest.
8 MR. SCHUDEL: I might just add under the test
9 of the Daubert case which the Supreme Court adopted,
10 another quote is probably relevant here. Quote, and
11 this is from the Schafersman decision, when an
12 expert's opinion on a disputed issue is a conclusion
13 which may be deduced equally as well by the trier of
14 fact with sufficient evidence on the issue, the
15 expert's opinion is superfluous and does not assist
16 the trier in the understanding of the evidence or
17 determining the factual issue. Public interest is
18 for this Commission to determine and not Dr. Staihr
19 to determine.

20 COMR. LANDIS: Superfluous -- well,
21 superfluous isn't the same thing as objectionable.
22 It is just gratuitous. It is more something -- as I
23 understand what you just read to me --
24 MR. SCHUDEL: In the context of Daubert, and
25 had we had a Daubert hearing here, if it is

1 superfluous, it would be excluded.

2 COMR. LANDIS: I don't have that in front of

3 me.

4 MS. BARONE: Again, the witness is testifying

5 to his opinion, and the policy based on Nebraska

6 legislation. That is not superfluous. That is an

7 opinion based on the law. Although, he is not a

8 lawyer, he is a lay person who has made policy

9 recommendations to Sprint in his capacity or in his

10 position at Sprint. Therefore, he may review the

11 laws of the state of Nebraska in forming his opinion.

12 COMR. LANDIS: I think in this case, I am

13 going to sustain the objection based on the fact that

14 it is based on foundation. You talk about the

15 Legislature has said and the policies are referred

16 to. I don't think there is adequate foundation to

17 admit that language and therefore I am going to

18 sustain the objection with respect to Dr. Staihr's

19 testimony found on Page 11, Line 16 and concluding on

20 Line 23. Finally -- I guess we have two more. Page

21 12, Lines 1 through 6. 0753

22 DR. STAIHR: Third, because as the Commission

23 has pointed out, competition helps bring about, one,

24 increased customer choice, two, innovation, three,

25 efficiency, and, four, improved customer service.

1 Sprint's role in enabling the provision of
2 competitive local telephone service will help to
3 bring about those very things. Therefore, granting
4 Sprint's application is in the public interest.
5 MR. SCHUDEL: To try and be a bit conserving
6 of our time, everything that has been advanced by Mr.
7 Fahleson and myself with regard to the prior Page 11,
8 Line 16 through 23, I believe is equally applicable.
9 We object to this, and would ask that it be stricken.
10 MR. FAHLESON: Join in that objection.
11 MS. BARONE: Dr. Staihr is an economist and
12 he is certainly qualified to testify regarding
13 increased customer choice innovation basically and
14 improve customer service. If you are objecting to
15 therefore granting Sprint's application is in the
16 public interest, that is the ultimate conclusion.
17 Yes, the Commission will rule on that. Certainly,
18 Dr. Staihr can testify as to whether these items are
19 in the public interest.
20 COMR. LANDIS: With respect to the objection
21 to Dr. Staihr's testimony, Page 12, Lines 1 through
22 6, I am overruling the objection. That testimony
23 will remain in the record and be admitted into
24 evidence here. Finally, we have Page 12, Line 8
25 through 14.

1 DR. STAIHR: Fourth, granting Sprint's
2 application is in the public interest because it will
3 safeguard the rights of consumers by helping to move
4 toward a robust market environment where consumers
5 are not captive to monopoly providers. It will
6 preserve and advance universal service by enabling
7 the offering of additional services from additional
8 providers to additional customers. It will help to
9 ensure the provision of quality telecommunications
10 service at just, reasonable and affordable rates.
11 MR. SCHUDEL: And, we object to that
12 testimony as noted on our list. That testimony lacks
13 proper and sufficient foundation. It is clearly not
14 only a legal conclusion, but it is a legal conclusion
15 on the ultimate decisions and findings that this
16 Commission has to make. His words in Line 9, Page
17 12, safeguards the rights of consumers are absolutely
18 the same words as used in Rule 002.49(b)(1)(b). His
19 words, preserve and advance universal service which
20 are also absolutely conclusiary, you won't find any
21 factual evidence offered by him before this statement
22 are the words of Rule 002.49(b)(1)(a). The words
23 ensure the provision of quality telecommunications
24 services are again the conclusion that this
25 Commission has to evaluate under 002.49(b)(1)(c). It

1 is speculative and it is not proper testimony even
2 for an economic expert.
3 MR. FAHLESON: I would join in that
4 objection.
5 MS. BARONE: With regard to Lines 8 through
6 9, he is explaining why or he is providing the
7 economic reasons for safeguarding the rights of
8 consumers. He says, by helping to move toward a
9 robust market. Therefore, although he is citing the
10 rule, he is explaining why granting Sprint's
11 application will safeguard the rights of consumers,
12 preserving and advancing of universal service by
13 enabling the offering of additional services. Again,
14 he is explaining why. By granting it, he -- will
15 help ensure the provision of quality
16 telecommunications services. You can't look at this
17 in a vacuum. You have to look at this in total. So,
18 therefore, I think that -- he may have cited two
19 rules, but then he explained why -- he explains how
20 those rules are being or factually how those rules
21 are being meant.
22 MR. FAHLESON: Giving someone a Phd doesn't
23 give them the authority to make this Commission's
24 decision for them.
25 MS. BARONE: And, he is not making the

1 authority. He is stating the reasons why the
2 Commission should find that this is in the public
3 interest.
4 COMR. LANDIS: Okay. Well, with respect to
5 his testimony found on Page 4 (sic), Lines 8 through
6 14, we are going to overrule the objections. He
7 reaches certain conclusions in his testimony. It
8 appears to me that he reached those based on economic
9 principles, robust market, monopoly providers and
10 what have you, so, we are going to leave that
11 testimony in the record. I think with that, we need
12 to go ahead and start on your direct testimony. Are
13 you -- I guess that is right. You have concluded.
14 You have offered this?
15 MS. BARONE: I would like to offer it into
16 evidence. I think I did offer it earlier.
17 MR. KISTLER: My recollection is you accepted
18 it subject to --
19 COMR. LANDIS: Subject to the -- so, you are
20 done with direct. We are now in cross. Mr. Schudel
21 and Mr. Fahleson have raised their objections. Thank
22 you for pointing that out. So, we are now starting
23 cross-examination of Dr. Staihr. You are under oath,
24 Dr. Staihr.
25 DR. STAIHR: Okay.

1 CROSS-EXAMINATION

2 By Mr. Schudel:

3 Q Dr. Staihr, you stated the purpose of your

4 testimony is to explain why the grant of this

5 application is in the public interest. That is the

6 primary thrust of your testimony, isn't it?

7 A Yes, sir, it is.

8 Q And, you are familiar with Commission Rule

9 249(b)(1) and that it sets forth the factors which

10 minimally are to be considered by the Commission in

11 determining the public interest?

12 A Yes, I am familiar with it, and that it is

13 not an exclusive list and that they could also

14 consider other things.

15 MR. SCHUDEL: For I hope ease of reference

16 in the record, I have made a copy of a portion of

17 2.49. I would just ask your guidance since we have

18 now -- I didn't anticipate that the whole rules would

19 be judicially noticed. Would it be helpful to mark

20 this or do you want to dispose of that?

21 COMR. LANDIS: You want to distribute these

22 now?

23 MR. SCHUDEL: This is simply a portion of

24 2.49.

25 COMR. LANDIS: Sure.

1 MR. SCHUDEL: And, now, that we have received
2 them all, do you have a copy of the rule with you,
3 sir?
4 DR. STAIHR: I have a copy, yes. It is about
5 three pages long. I don't know if it is the whole
6 thing.
7 COMR. LANDIS: I am not sure what your
8 question is, Mr. Schudel.
9
10 By Mr. Schudel:
11 Q Do you have Rule 004.29? Is that what you
12 have?
13 A Yes.
14 Q Then, I won't trouble you with this copy.
15 On Page 3, Line 21 through 4, Line 2, you state,
16 quote, Sprint will initially serve as an enabler in
17 the provision of local exchange service by providing
18 transport, switching and interconnection to wholesale
19 customers to be used in the origination and
20 termination of local and long distance traffic, end
21 of quote. Do you agree with Mr. Burt's
22 characterization that was previously provided that an
23 enabler is essentially a synonym for wholesaler?
24 A Yes, I agree with that.
25 Q Do you have any factual information

1 concerning the business plans of Sprint with regard
2 to providing services or was that limited to being
3 within the scope of Mr. Burt's testimony?
4 A That was pretty much Mr. Burt's testimony.
5 Q Moving to Page 5, Lines 2 through 7, you
6 state there that Sprint's function as an enabler will
7 create the benefits you identify. My question for
8 you is isn't it correct that none of the claimed
9 benefits from Sprint acting as enabler will be
10 created absent the partnering, to use an earlier
11 term, relationship with cable companies as Mr. Burt
12 testified to?
13 A Your statement was incorrect. I believe
14 you said that I stated we would create, I believe
15 that was your word. That word isn't on the page.
16 Q Substitute help produce. I will restate
17 that. Is it correct that none of the claimed
18 benefits acting as an enabler will be helped to be
19 produced absent a partnering relationship with cable
20 companies as stated by Mr. Burt?
21 A Well --
22 MS. BARONE: Can you restate the question?
23
24 By Mr. Schudel:
25 Q Is it correct that none of the claimed

1 benefits from Sprint acting as an enabler will be, to
2 use your term, helped to be produced absent a
3 partnering relationship with cable companies as has
4 been described by Mr. Burt?
5 A No, that is not true, because these are the
6 benefits of competition in any form.
7 Q But your testimony that I am referring to is
8 in the context of Sprint acting as an enabler, is it
9 not?
10 A My testimony is that line says what the
11 benefits of competition are in any form.
12 Q Your statement is Sprint's function, Line
13 5, Sprint's function as an enabler in the provision
14 of basic local services will help produce these
15 benefits for consumers in Nebraska.
16 A Yes.
17 Q You are testifying that your context there
18 is not as an enabler?
19 A That sentence, it is.
20 Q That is what I was referring to.
21 A Oh, I am sorry. I thought you were talking
22 about the benefits.
23 Q The words, help produce, are in that Line 6.
24 So, do you agree with the question that I asked
25 before, then?

1 A I --

2 MS. BARONE: Asked and answered.

3 MR. SCHUDEL: It wasn't asked and answered.

4 He had another question in mind.

5 COMR. LANDIS: That is right. Ask the

6 question and you give the answer. Let us move on.

7 Let him ask the question, and then we will get to

8 your answer.

9

10 By Mr. Schudel:

11 Q We focus now on Page 5, Lines 5 through 7.

12 A Yes, sir.

13 Q All right. In that context, is it correct

14 that none of the claimed benefits from Sprint acting

15 as an enabler will help to be produced absent a

16 partnering relationship with the cable companies as

17 described by Mr. Burt?

18 A That is true.

19 Q So, standing alone, Sprint's proposed

20 enabler services do not benefit consumers, do they,

21 standing alone?

22 A I don't understand the concept of stand

23 alone enabling. Enabling assumes another party.

24 Q Isn't it also correct that without Sprint,

25 enabler services or cable companies such as Time

1 Warner lacks the capability to provide the services
2 to --
3 MS. BARONE: Objection, leading.
4 MR. SCHUDEL: What do you mean? I am
5 entitled to lead on cross. I didn't even get my
6 question completed.
7 COMR. LANDIS: Well, now --
8 MS. BARONE: I am sorry. I had another
9 objection in mind.
10 COMR. LANDIS: Ask the question, and then you
11 may pose your objection.
12
13 By Mr. Schudel:
14 Q Isn't it correct that without Sprint's
15 enabler services, a cable company, such as Time
16 Warner lacks the capability to provide the service to
17 consumers that it proposes?
18 A No, because they could get those services
19 from another company.
20 Q The point being they have to have services
21 from someone else, some third party.
22 A Or produce them themselves.
23 Q Page 6, Lines 16 through 19, you state your
24 opinion concerning the connection between customer
25 preference and public interest. The customer to

1 which you refer in these lines and the response that
2 you continue on Pages 7 and 8 of your prefiled
3 testimony is a member of the general public. Is that
4 not correct?
5 A That is correct. It is the end user.
6 (Intervener Exhibit Number 13 was marked for
7 identification)
8 Q I have given you a copy marked as Exhibit
9 13 of the application of Intrado Communications,
10 Inc., and the order entered by the Commission in
11 Application C-2647. Do you have occasion to look at
12 either the application or the order that has been
13 marked as Exhibit 13 in connection with preparing
14 your testimony?
15 A Not at all.
16 MR. SCHUDEL: At this point, since the
17 witness has not seen these, I will ask the Commission
18 to take judicial notice of these records which were
19 brought up by Mr. Burt in his testimony.
20 COMR. LANDIS: Do you want to be heard on
21 that?
22 MS. BARONE: I believe the Commission has
23 already taken judicial notice of all --
24 COMR. LANDIS: Of our rules. I don't know if
25 we have done anything with previous orders.

1 MS. BARONE: Then, I would ask that the
2 Commission take judicial notice of all of the orders
3 that it has granted or where it has granted statewide
4 certification in the state of Nebraska.
5 MR. SCHUDEL: I obviously have to object to
6 that. This will be part of her direct case. We went
7 through all of that this morning. She did not pre-
8 identify those. This was brought out in the course
9 of my cross-examination, and, in the interest of
10 having a complete record, so that the Commission can
11 refer to what Mr. Burt was referring to, I am making
12 this offer.
13 COMR. LANDIS: I think --
14 MS. BARONE: I am not sure that every exhibit
15 identified today has been pre-identified. I don't
16 think there is any prejudice to this.
17 COMR. LANDIS: No, and this hasn't been pre-
18 identified. On the other hand, it was your witness
19 that brought it up and used it, I think, in support
20 of whatever point he was trying to make at the time.
21 I think just to make the record complete, I don't
22 know that anybody is prejudiced by admitting that,
23 and we will.
24 (Intervener Exhibit Number 13 was received
25 in evidence. See Supp. Volume)

1 But we are not going to take all of our orders
2 specifically referred to by your witness. We will
3 put it in the record. You testified that you have
4 not read it. So, we don't need to have any more
5 questions on that. So, we are going to let that come
6 into the record. That will be, by the way, Exhibit
7 13. That is the Intrado.
8 MS. BARONE: Commissioner Landis, could I
9 just note for the record. Mr. Burt -- that was
10 elicited on cross-examination in terms of the
11 Intrado. He did not specify that specifically in his
12 testimony.
13 MR. SCHUDEL: He testified on cross that was
14 one of the 50 that he referred to. I asked him
15 whether there was any of the 50 that referred to
16 wholesale, and he identified Intrado. That was the
17 context.
18 MS. BARONE: In interest of fairness, I would
19 ask that all of the orders would be noticed.
20 COMR. LANDIS: Well, I am going to -- I am
21 not going to put all 50 applications -- in fact, I
22 think our rule on testimony here where I --
23 MS. BARONE: I am not asking that they be
24 admitted, sir. I am asking that they be judicially
25 noted. That is all.

1 COMR. LANDIS: We will take judicial notice.
2 In fact, we will admit into evidence the order on
3 Intrado. I will reserve on that other issue on
4 whether we will take judicial notice of all these
5 other orders. But I will do that at the end of the
6 day, and we can deal with that in whatever order we
7 ultimately make here. So, with that, then, we are
8 off this particular order, questions of this witness.
9 So, we are moving on.
10
11 By Mr. Schudel:
12 Q Dr. Staihr, you mentioned you had a copy of
13 Rule 2.49(b), and if you could make reference to
14 that, I have some questions with regard to that. If
15 you will refer to Rule 002.49(b)(1)(a). Do you see
16 in the rule that that references preserving and
17 advancing universal service? Is that what it says?
18 A Speaking as a non-lawyer, yes, sir.
19 Q I just want to be sure we are on the same
20 page.
21 A Right.
22 Q Do you claim that there are any unserved
23 consumers in the area of Nebraska for which Sprint
24 seeks certification that will receive
25 telecommunication service only if this application is

1 granted?

2 A No, I don't make that claim at all.

3 Q Will Sprint bill, collect, and remit any

4 NUSF charges to the Nebraska Universal Service Fund

5 in connection with its enabler services that are

6 proposed?

7 A Sprint will enable the billing, collecting,

8 and remitting of USF contributions.

9 Q So, the answer to my question is Sprint will

10 not itself.

11 A Sprint will not perform that function, but

12 as you yourself indicated that it would not be done

13 without --

14 COMR. LANDIS: I think it has been adequately

15 answered. Thank you, Dr. Staihr.

16

17 By Mr. Schudel:

18 Q Now, if you could refer to Rule

19 2.49(b)(1)(b).

20 A Yes.

21 Q And, that rule, still on the same page,

22 refers to protecting the public safety and welfare.

23 Correct?

24 A Correct.

25 Q Isn't it true that any consumer that would

1 subscribe to your partner, Time Warner's proposed
2 service, would lose that service if a power outage
3 occurred?
4 A I really don't know the answer to that.
5 Q Now, let us look at 2.49(b)(1)(c), and that
6 speaks in terms of, quote, insuring continuous
7 quality of telecommunication service in the proposed
8 service area. Do you see that?
9 A Yes, I do.
10 Q Have you reviewed the Nebraska Public
11 Service Commission Quality of Service Rule found in
12 2.02 through 2.13 of its rules?
13 A No, I have not.
14 Q So, you are unable to testify whether your
15 employers application before the Commission today
16 would satisfy those rules. Is that correct?
17 A I have not reviewed those, so, the answer is
18 correct.
19 Q Now, let us look at Rule 2.49(b)(1)(d). It
20 speaks to the safeguarding the rights of consumers.
21 Correct?
22 A Yes, it does.
23 Q Again, since Sprint will not have retail
24 customers as an enabler, will it have to rely solely
25 on the market practices of its partners in connection

1 with safeguarding consumer rights?

2 A It is the provision of competition that

3 safeguards consumers rights.

4 Q With regard to any customer relations, and

5 the rights of consumers who might, for example, have

6 a complaint concerning the enabled service that Time

7 Warner and Sprint are speaking to, would it be your

8 testimony that Sprint will have to rely upon Time

9 Warner with regard to the handling of any consumer

10 complaints?

11 A Not necessarily because I believe there are

12 certain services such as 911 where Sprint actually is

13 performing more of a function with regard to the

14 service. So, to the extent that something would go

15 wrong, it would be our role to fix it and therefore

16 address the rights of consumers if you are talking

17 about complaints. Would we be interfaced? No.

18 Would we be the ones fixing the problem? In some

19 cases, yes.

20 Q So, you have got the back room operation.

21 Is that a fair statement?

22 A Yes, we would make it right.

23 Q You don't disagree with the testimony given

24 by Mr. Burt that I asked him with regard to the

25 agreement concerning who has the customer interface,

1 do you?

2 A No, I don't disagree with that.

3 Q In connection with the customer choice that

4 you promote on Page 12 of your prefiled testimony,

5 isn't it correct that the only customers that would

6 be provided a choice would be those whose homes are

7 passed by the cable facilities of your partners?

8 A Initially, that is my understanding, yes.

9 Q Are you here to testify that there are any

10 plans by Time Warner or any of those other partners

11 to extend their facilities into, for example, rural

12 areas, a farm community?

13 A It --

14 MS. BARONE: Objection. Dr. Staihr cannot

15 testify on behalf of Time Warner.

16 MR. SCHUDEL: If he doesn't know, he can say

17 that.

18 COMR. LANDIS: He can say he doesn't know if

19 he doesn't.

20 DR. STAIHR: I don't know about Time Warner.

21 I do know that the possibility of Sprint offering

22 retail service as a result of this application is a

23 possibility.

24 MR. SCHUDEL: But that wasn't my question.

25 So, I would move to have that stricken.

1 COMR. LANDIS: We will strike that. Be a
2 little more responsive. I think the answer to your
3 question was he doesn't know.
4 MR. SCHUDEL: I think you are right. I have
5 no further cross for this witness.
6 COMR. LANDIS: Mr. Fahleson?
7
8 CROSS-EXAMINATION
9 By Mr. Fahleson:
10 Q I will be brief. Just to clarify, Dr.
11 Staihr, you are not a lawyer. Correct?
12 A No, sir.
13 Q Don't have a law degree?
14 A No, sir.
15 Q Still focusing on Rules 002.49(b),
16 Sub-paragraphs 1(a)(b)(c)(d). Again, you would agree
17 with me that one of the requirements of this rule
18 with respect to an application to provide competitive
19 local exchange telecommunications services is that
20 the application showed that it can, for example,
21 ensure the continuous quality of telecommunication
22 services. Correct?
23 A That is what the rule says, yes.
24 Q In this situation, your application -- the
25 consumers that we are talking about are actually the

1 end user customers of the cable company that you are
2 partnering with. Correct?
3 A Yes. Those end users that would be enjoying
4 the continuous quality of service.
5 Q Is Sprint prepared under oath in today's
6 hearing prepared to guarantee that Time Warner will
7 always provide quality telecommunications services to
8 its end user customers that are enabled by Sprint?
9 A I certainly can't speak for Time Warner.
10 Q I am asking you to speak on behalf of
11 Sprint. Are you prepared to guarantee the service
12 that Time Warner is going to provide to these
13 customers?
14 A I --
15 MS. BARONE: Objection. The witness cannot
16 sit here and guarantee what services Time Warner is
17 going to provide.
18 MR. FAHLESON: I think Ms. Barone just made
19 my point.
20 MS. BARONE: The word guarantee is a term of
21 art and he can't sit here and be asked to testify as
22 to whether he can guarantee or not. I did not mean
23 that in the context that you took it. I am not
24 testifying here. He cannot make a statement with
25 regard to Time Warner's services.

1 By Mr. Fahleson:

2 Q To be accurate, Dr. Staihr, Sprint is not
3 prepared at this point in this hearing to guarantee
4 either from a legal perspective or non-legal
5 perspective the services that Time Warner will
6 provide to its end user customers. Correct?

7 A Well --

8 MS. BARONE: I object. There is a -- the
9 purpose of this proceeding is to determine whether
10 Sprint should receive certification. The agreements
11 between Time Warner, the wholesale arrangement
12 between Time Warner and Sprint are not at issue. To
13 the extent there are any service quality issues
14 between Time Warner and Sprint, those are not at
15 issue in this proceeding. It is not relevant to this
16 proceeding.

17 COMR. LANDIS: I don't know how you answered
18 the question Mr. Fahleson asked. Answer it if you
19 can. I am going to go ahead and permit the question,
20 and allow Dr. Staihr to answer it if you can. If you
21 are prepared to guarantee either legally or
22 otherwise.

23 DR. STAIHR: I don't think I can answer the
24 question. 0774

25 MR. SCHUDEL: I would like to ask then that

1 you reconsider your ruling on Page 12, Lines 12
2 through 14, where he said, quote, it will help to
3 ensure -- ensure and guarantee are synonymous in my
4 vocabulary. It will help to ensure the provision of
5 quality telecommunications services.
6 MS. BARONE: I object --
7 COMR. LANDIS: That was not what was asked.
8 MR. SCHUDEL: He just denied that he has any
9 knowledge to answer that.
10 COMR. LANDIS: That is not what was asked.
11 He asked about guarantees at this point.
12 MR. FAHLESON: Again, I think Ms. Barone made
13 my point. Let me move on to my next question.
14
15 By Mr. Fahleson:
16 Q Looking at 002.49(b)(1)(b), you would agree
17 with me that one of the requirements that your
18 application must establish is that you safeguard the
19 rights of consumers. Is that correct?
20 A No. The rights of consumers are
21 safeguarded.
22 Q Actually, it says directly from the
23 regulations, safeguarding the rights of consumers.
24 A It doesn't say -- it says that the rights
25 of consumers will be safeguarded.

1 Q Do you have Rule 002.49(b)(1)(d) in front of
2 you?
3 A Yes.
4 Q Would you agree with me that it says public
5 interest shall include but not be limited to, and it
6 goes down and says, safeguarding the rights of
7 consumers. Correct?
8 A I believe your question said you.
9 Q In any event, you would agree with me that
10 002.49(b)(1)(d) states verbatim, safeguarding the
11 rights of consumers.
12 A Yes, it does.
13 Q Okay. If I understand your testimony
14 correctly, the way in which your application or
15 Sprint's application does this because it will help
16 us move toward a robust market environment. Is that
17 correct?
18 A It is correct.
19 Q You have offered no other evidence, no other
20 testimony in the record to help this Public Service
21 Commission establish that this application will be
22 safeguarding the rights of consumers. Correct?
23 A No. There were some DR's that were
24 provided that answered that same question.
25 Q DR's?

1 A Date Requests.
2 Q But your testimony, you have not testified
3 to anything other than it will help us move towards
4 competition and your believe and your testimony, that
5 is what is going to safeguard the rights of
6 consumers?
7 A It is my DR that talks about that as well.
8 I don't know if that constitutes my testimony.
9 Q No, it doesn't actually.
10 A Okay.
11 Q So, as long as it is competition, by God, it
12 has got to be good for consumers. Right?
13 A According to the first and second welfare
14 theorem of economics, yes, sir.
15 Q Again, you can't -- same line of questions.
16 With respect to Rule 002.49(B)(1(b), again, public
17 interest shall include protecting the public safety
18 and welfare. Correct?
19 A Yes.
20 Q And, the public we are talking about in that
21 situation is the end user customer. Correct?
22 A Correct.
23 Q But, again, Sprint will not have any
24 relationship with the end user customer when it comes
25 to this enabling relationship it has with the cable

1 company. Correct?

2 A No. As I mentioned before, with regard to

3 services like E911, what Sprint does will be directly

4 affecting the service the customer receives.

5 Q But, you would agree with me that that is a

6 very small portion of the service offering which is

7 at issue in the contract between Time Warner and

8 Sprint. Correct?

9 A I would agree that it is a large part of

10 public safety.

11 Q But you would agree that that is a small

12 part of the contract. Correct?

13 A I would agree that it is one part. If you

14 need it, I don't know that I would agree that it is

15 small.

16 MR. FAHLESON: I have no further questions.

17 COMR. LANDIS: Okay. Ms. Melton, do you have

18 any questions of this witness before we go to

19 redirect?

20 MS. MELTON: No.

21 COMR. LANDIS: Ms. Barone, are you ready for

22 redirect? Do you want a minute or two to --

23 MS. BARONE: Yes, I think we are ready here.

24

25 REDIRECT EXAMINATION

1 By Ms. Barone:
2 Q First, I would like to refer back to Exhibit
3 7 that was previously identified and admitted into
4 evidence, Sprint's confidential responses to
5 interveners data request. Dr. Staihr, do you have a
6 copy of that?
7 A I believe I do, yes.
8 Q Are you the same Dr. Staihr that responded
9 to Question Number 4?
10 A Yes.
11 Q Also, Number 7?
12 A Yes.
13 Q Also, Number 9?
14 A Yes.
15 Q Also, Number 10?
16 A Yes.
17 Q I believe that is all there that you
18 responded to.
19 A And, 13.
20 Q And, 13.
21 A Yes.
22 Q Dr. Staihr, if I were to ask you these
23 questions today, would your answers be the same?
24 A I --
25 MR. SCHUDEL: There are no questions asked,

1 and she is going to try and obviously put this in
2 evidence. These were answered on December 21 which
3 is about 10 days before her date under the pre-trial
4 order for designated exhibits and testimony. She did
5 not designate these as exhibits or testimony and she
6 can't now bring them forward for all the reasons we
7 discussed this morning.
8 MS. BARONE: Mr. Landis identified this
9 exhibit to be marked as an exhibit. He did not
10 designate specific responses when he --
11 MR. SCHUDEL: Oh, but I did, and I offered
12 only a portion of it.
13 MS. BARONE: No, you did not identify it.
14 MR. SCHUDEL: I absolutely did.
15 MS. BARONE: Pursuant to the prehearing
16 order, you did not identify only specific questions
17 in your exhibit list in response to the prehearing
18 order. You simply identified Sprint's confidential
19 responses to the data request. I would ask that all
20 of responses be moved into evidence. It has already
21 been --
22 COMR. LANDIS: I am going to reserve on that.
23 Do you want to be heard? Fine. 0780
24 MR. SCHUDEL: Well, let me just say that
25 there is nothing in this prehearing as compared to

1 some prehearing orders in federal or state district
2 court that says that there shall be encompassed in
3 the identification or the offer of exhibits all of
4 the adverse parties materials, not present. Each of
5 us had to independently identify and the bottom line
6 is that I did not offer this. It was me who
7 designated this in my October 15 filing with you. At
8 this point, she has no basis under the prehearing
9 order to bootstrap off of my identification of it.
10 MR. FAHLESON: I believe Mr. Schudel is using
11 apart for impeachment which is usually is not the
12 type of exhibit that is listed before or any pre-
13 trial disclosure. Unless Ms. Barone is going to
14 impeach her own witness, it would be impermissible
15 for her to use it for that purpose.
16 COMR. LANDIS: Okay. Well, again, I am going
17 to reserve on this. You have made an offer --
18 MS. BARONE: Yes, I have.
19 COMR. LANDIS: -- of the data request. Is
20 that what you have offered?
21 MS. BARONE: The responses to the data
22 request, yes.
23 COMR. LANDIS: Okay. I am going to reserve
24 on that. We will treat that in our order ultimately.
25 So, do you have any other questions --

1 MS. BARONE: Yes, I do.

2 COMR. LANDIS: -- that don't pertain to the

3 data request?

4 MS. BARONE: Yes.

5

6 By Ms. Barone:

7 Q Earlier you were asked, Dr. Staihr, about

8 002.49(b)(1)(c) regarding continuous quality of

9 telecommunications service. To the extent that

10 quality of service rules apply to Sprint, Sprint will

11 comply with those rules. Is that correct?

12 A Absolutely, to the extent they apply, yes.

13 Q And, also, isn't it correct that in the

14 contract between Time Warner and Sprint that the

15 contract requires Time Warner to follow all

16 applicable rules?

17 A That is my understanding, yes.

18 Q What normal applicable rules include the

19 rule we just cited, 002.49(b)(c)(c) and other any

20 applicable rules?

21 A The -- 0782

22 MR. SCHUDEL: Objection. Speculative. He

23 didn't even testify on the agreement nor did -- when

24 I asked him whether he had any information about

25 that, he said that was Mr. Burt's bailiff. He didn't

1 go into that.

2 MS. BARONE: He didn't go into it, but he is

3 aware of the contract --

4 MR. SCHUDEL: Beyond the scope of cross-

5 examination.

6 COMR. LANDIS: I think that is a fair

7 objection. We will sustain the objection.

8 MS. BARONE: It is not beyond because of the

9 quality of service. You asked him regarding Time

10 Warner-Sprint --

11 MR. SCHUDEL: My objection stands.

12 COMR. LANDIS: Anything further on redirect?

13 MS. BARONE: No. That is all I have. Thank

14 you. At this time, I would like to make an offer of

15 proof on the Exhibit Number 7 that has been

16 identified previously.

17

18 By Ms. Barone:

19 Q Just go through and ask you, Dr. Staihr, if

20 these are your answers to the questions here.

21 Request Number 4.

22 A Yes. 0783

23 Q This answer is true and correct to the best

24 of your knowledge and belief.

25 A Yes, it is.

1 MR. SCHUDEL: This is all as an offer of
2 proof, if I heard you right?
3 MS. BARONE: Yes, it is, in the event that
4 the objection is sustained.
5
6 By Ms. Barone:
7 Q Request Number 7. Is your answer true and
8 correct to the best of your knowledge and belief?
9 A Yes, it is.
10 Q Request Number 9. If you answered this
11 question, and is it true and correct to the best of
12 your knowledge and belief?
13 A Yes, I did, and yes, it is.
14 Q And, Request Number 10. That was 9 and this
15 is 10.
16 A Yes.
17 Q You also -- and, this is your answer and it
18 is true and correct to the best of your knowledge and
19 belief?
20 A Yes, it is.
21 Q And, then, Request Number 13, is this your
22 response and is it true and correct to the best of
23 your knowledge and belief?
24 A Yes, it is.
25 MS. BARONE: Thank you.

1 MR. SCHUDEL: And, we renew our objection.
2 MR. FAHLESON: We join in that.
3 MR. SCHUDEL: I said, we renew our objections
4 to those, and, at this point, we would have no
5 opportunity to cross.
6 COMR. LANDIS: And, you made an offer of
7 proof. I don't know that that is a sufficient offer.
8 It has been a long time since I have been in a
9 courtroom. So, anything further? Let me ask the
10 staff first. Ms. Melton? We have had direct, cross,
11 redirect. Commissioner Johnson, do you have any
12 questions of Dr. Staihr?
13 COMR. L. JOHNSON: No.
14 COMR. LANDIS: Dr. Staihr, we thank you for
15 your testimony today. We appreciate your help. You
16 are excused.
17 DR. STAIHR: Thank you.
18 (Witness is excused)
19 COMR. LANDIS: Before we adjourn, I think in
20 the prehearing conference, we talked about post-
21 hearing --

22 MR. SCHUDEL: If I may, under your ruling on
23 the Motion in Limine, you afforded me the right to
24 offer the South Carolina and the Maine orders. You
25 also made a statement with regard to taking judicial

1 notice. Obviously, I don't have a witness to offer,
2 but I would at least like to put that part of my case
3 in which I think you gave me leave to do.
4 COMR. LANDIS: I don't have the order in
5 front of me, but I think to the extent that I said
6 you could put it in, you --
7 MS. MELTON: We didn't exclude them, but we
8 didn't say we were admitting them either, so, I think
9 you can make that decision.
10 MR. SCHUDEL: I will have these marked and
11 offered, then. Before I do that, let me just read
12 from the order this one sentence. This is on Page 3
13 of the order on the Motion in Limine dated November
14 1. The Commission will take administrative notice of
15 the fact that Time Warner has filed an application
16 for CLEC authority at C-3228. I assume you will take
17 that judicial notice.
18 (Intervener Exhibits Number 14 and 15 were
19 marked for identification)
20 MR. KISTLER: Is that all one exhibit?
21 MR. SCHUDEL: No.
22 MR. KISTLER: I show the Intrado Exhibit as
23 Number 13.

24 MS. BARONE: I would note my objection that
25 neither of these orders are relevant to Sprint's

1 application, and would ask that they be stricken from
2 the record.
3 COMR. LANDIS: Well, on that, I want to go
4 back and take another look at my order. I am going
5 to reserve on them. I think we did it, but
6 conference again, I am just trying to recall. We
7 specifically excluded certain items and then we might
8 be a little vague on what was -- I am going to
9 reserve on that Intrado. There has been an offer of
10 Intrado. I don't show that as being admitted -- it
11 was admitted. So, for the record here, we have two
12 exhibits that have been offered, Mark offered, and I
13 have reserved. I will make that decision by tomorrow
14 and let the parties know to the extent you want to
15 use that in post-hearing comments. I will get back
16 to you on that. Anything else we need to clean up
17 before we talk about post-hearing comments?
18 MR. SCHUDEL: I guess I would ask the
19 question. On these matters where you have reserved
20 ruling, your comments have been we will address that
21 in our final order, given the fact that we will be
22 briefing or whatever before that. I assume you will
23 issue some sort of a ruling so we know where we stand
24 on that?

25 COMR. LANDIS: Yes, and I am trying to recall

now.

MS. MELTON: You reserved on --

COMR. LANDIS: We ruled on the application.

MS. MELTON: You reserved on taking notice of the 50 states, the 50 CLECs, the orders regarding the -- we have reserved on ruling on the offer of the remaining data requests not previously entered, and you reserved on these final two exhibits.

COMR. LANDIS: Okay. And, you made an offer of proof on the data requests.

MS. BARONE: Yes.

MR. SCHUDEL: I think that you ruled on the 50. I think you made a ruling on that, but I may be mistaken. I thought you said that the answer was, no, those would not be received.

COMR. LANDIS: On the --

MR. SCHUDEL: On the 50.

MS. MELTON: The 50 CLEC orders. I may have just written it down when you first said it.

COMR. LANDIS: Well, I think I did. I think I did say that we were not going to put the 50 in. We were going to put in Intrado. That was specifically referred to by Mr. Burt. But that will be my ruling on that. We are not going to put the 50 in the record here. Tell me what else was dangling

1 at the end of the day.

2 MS. MELTON: Data requests, the remaining

3 data requests.

4 COMR. LANDIS: You made an offer of proof.

5 MS. BARONE: And, requested that they be

6 admitted into evidence.

7 MS. MELTON: And, then, the two remaining

8 exhibits, the cases from --

9 COMR. LANDIS: You make a good point. I will

10 make a call on this and we will let the parties know

11 by e-mail whether or not the data requests will be

12 admitted and whether or not the two orders from Maine

13 and South Dakota will be admitted. Anything else we

14 need to talk about?

15 MR. SCHUDEL: I guess I just raise the

16 question of -- we did specify in the prehearing order

17 10 days after the transcript is available for -- to

18 the post-hearing filing. I don't know if all counsel

19 are still committed to that. I know things are going

20 to be busy coming up. I don't know that 10 days is

21 magic. For my part, if it could be lengthened, short

22 but reasonable additional period, it would be

23 convenient, but I just thought I would raise that.

24 MS. BARONE: We would like to stick with the

25 schedule, please.

1 COMR. LANDIS: Okay. I think we will --
2 obviously he would like a little bit more time. You
3 are the applicant and I think we will defer to your
4 wishes here. We will make it 10 days. Mr. Overcash,
5 you will have to weigh in some of those comments. We
6 will need to sit down and prioritize what is on the
7 plate for the transcript. So, we don't have a date
8 on that. We will prioritize pending matters that
9 need a transcript and try to prioritize them. Okay.
10 Finally, we will have post-hearing comments filed 10
11 days from the day that the transcript is prepared.
12 Those will be working days. We won't include
13 weekends, business days. Anything else that you can
14 think of, Ms. Melton?
15 MS. MELTON: No.
16 COMR. LANDIS: With that, we are adjourned.
17
18 ((Whereupon, at or about 3:30 p.m., November
19 4, 2004, said hearing was closed)
20
21
22
23
24
25

BEFORE THE NEBRASKA PUBLIC SERVICE COMMISSION

In the Matter of the Application of Time Warner Cable Information Services (Nebraska), LLC d/b/a Time Warner Cable for a Certificate of Authority to Provide Local and Interexchange Voice Services within the State of Nebraska	)	Application No. _____

APPLICATION AND REQUEST FOR AUTHORITY

Dated: June 17, 2004

I. INTRODUCTION

Application is hereby made to the Nebraska Public Service Commission (the "Commission") for a certificate authorizing Time Warner Cable Information Services (Nebraska), LLC, d/b/a Time Warner Cable ("TWCIS" or "Applicant") to operate as a certificated provider of local and interexchange voice services. TWCIS seeks to provide facilities-based competitive local and long distance Internet Protocol ("IP") voice services to customers in the State of Nebraska that have access to the cable facilities of Time Warner Cable in the Nebraska communities of Lincoln, Fremont, Columbus, York, Nebraska City, Seward, Crete, Fairbury, Falls City, Tecumseh, David City, Auburn, Pawnee City, Humboldt, Denton, and Table Rock. This Application is made pursuant to Nebraska Revised Statutes §§ 86-128 and 86-129 (2002 Cum Supp), and Title 291, Article 5 §§ 002.49 and 003.12A of the Nebraska Public Service Commission Telecommunications Rules and Regulations.

Exhibit
12
L.8-18-05

II. RESERVATION OF RIGHTS

In recognition of the currently unsettled nature of the issues surrounding the appropriate regulatory treatment of IP-based voice services such as those proposed by TWCIS in this Application, TWCIS expressly reserves any and all substantive or procedural rights under federal or state law, including any and all rights regarding the authority of the Commission and other state bodies to regulate TWCIS' IP-based services. In submitting this Application and the other materials included in this filing, TWCIS does not waive any rights; neither the act of filing this submission nor any of the contents of this submission should be construed as a concession or agreement by TWCIS that the services at issue in this Application constitute telecommunications services, local exchange services, common carrier offerings, or services that are otherwise subject to federal or state regulation, nor that the entity or entities providing them constitute telecommunications carriers, telecommunications providers, local exchange carriers, interexchange carriers, common carriers, or other regulated entities.

Nonetheless, TWCIS has determined to apply for a certificate to provide local and long distance voice services, subject to the reservation of rights set forth above. Upon grant of this Application, TWCIS intends to comply with the applicable rules and regulations governing local and long distance telecommunications service in the State of Nebraska.

III. PETITION FOR CERTIFICATE TO OPERATE AS A PROVIDER OF LOCAL AND INTEREXCHANGE VOICE SERVICES.

TWCIS respectfully requests a certificate of authority to operate as a provider of local and interexchange voice services pursuant to Nebraska Revised Statutes §§ 86-128 and 86-129 (2002 Cum Supp), and Title 291, Article 5 §§ 002.49 and 003.12A of the Nebraska Public Service Commission Telecommunications Rules and Regulations. Upon approval of this

Application by the Commission, TWCIS intends to provide facilities-based local and interexchange Internet Protocol ("IP") voice service targeted to the residential market.

A. TWCIS' Provision of Competitive Local and Interexchange Voice Services Within its Proposed Service Territory Is Fully Consistent With The Public Interest.

Granting TWCIS' Application will serve the public interest. TWCIS' service will be the first competitive local residential service generally available in its service area that does not depend on any ILEC facilities in order to reach its customers. For many of its customers, TWCIS will be the first CLEC to offer residential voice service over facilities other than the ILEC's local loop. In addition to advancing universal service by offering alternative facilities-based services, TWCIS will contribute to the federal and state Universal Service Funds in accordance with applicable law. In addition, as discussed further below, TWCIS' IP voice services will fully comply with all requirements applicable to telecommunications services, including all applicable E911 obligations, CALEA, Universal Service, and Telephone Relay Service requirements. The proposed services will also provide customers with access to directory assistance, operator assistance, and directory listings.

Significantly, TWCIS' IP voice services will be carried over TWCIS' proprietary IP network and will not travel over the public Internet, which provides TWCIS with sufficient control to ensure that its services meet or exceed the applicable technical standards for service quality. In addition, all appropriate intercarrier compensation will be paid on calls originating from TWCIS' network, and all jurisdictional determinations and payments in this regard will be made in accordance with existing compensation regimes. TWCIS will also remit, if appropriate, all taxes and fees applicable to traditional telephone services. Finally, Time Warner Cable has

an established history of offering high-quality communications products to Nebraska customers and will continue to serve consumer interests through TWCIS' offering of IP voice services.

B. TWCIS has Sufficient Financial Resources to Provide Competitive Local and Interexchange Service in its Proposed Service Area.

TWCIS is a limited liability company owned by Time Warner Cable Inc. and Time Warner Entertainment-Advance/Newhouse Partnership. The ultimate corporate parent of each of these entities is Time Warner Inc. As a subsidiary of Time Warner Cable Inc., Time Warner Entertainment-Advance/Newhouse Partnership and, ultimately, Time Warner Inc., TWCIS has access to the financing and capital necessary to offer the services and conduct the other operations described in this Application. The substantial financial resources of Time Warner Inc. are discussed briefly below and in greater detail in the attached Time Warner Inc. SEC Annual Report 10K filings, attached hereto as **Exhibit H**. In addition, **Exhibit I**, attached hereto, demonstrates Time Warner Cable Inc's financial commitment to the Nebraska telephone operations of the Applicant.

C. TWCIS has Sufficient Technical Competency to Provide Competitive Local and Interexchange Service in its Proposed Service Area.

The Applicant will rely on the individuals identified in **Exhibit G**, attached hereto, for technical and managerial support in providing services in Nebraska. In addition, the Applicant will hire additional technicians and managers as may be necessary to provide top-quality services in Nebraska. As the Applicant is a sister company of Time Warner Cable, the Applicant will be able to draw on the managerial and technical expertise of Time Warner Cable's operations in Nebraska. At present, Time Warner Cable has nearly 300 employees in Nebraska. The Applicant's services will be marketed by Time Warner Cable, and customer service will be provided by Time Warner Cable.

D. TWCIS has Sufficient Local and National Managerial Resources to Provide Competitive Local and Interexchange Service in its Proposed Service Area.

Through arrangements with its affiliate Time Warner Cable, TWCIS will have sufficient managerial and technical capability to ensure that TWCIS can provide the services for which it seeks certification. The management teams at Time Warner Cable, based in Stamford, Connecticut and Lincoln, Nebraska include individuals with extensive experience in successfully developing and operating communications businesses, including local telephone businesses. Moreover, Time Warner Cable possesses the internal managerial resources to support its Nebraska operations. Certain persons that are part of the management teams at Time Warner Cable will also be officers of TWCIS. Their expertise in telecommunications makes the Time Warner Cable management team well-qualified to construct and operate facilities on behalf of TWCIS. In addition, the officers and management of Time Warner Cable also have the technical expertise, developed through designing, constructing, and operating telecommunications networks, to provide the proposed services. Further information regarding these management resources is briefly described below and is set forth in greater detail at **Exhibit G**, attached hereto.

E. This Application Provides All of the Information Required by Commission Rules.

In support of TWCIS' request for certification to provide local and interexchange voice services, TWCIS submits the following information responsive to the requirements of Title 291, Chapter 5, §§ 002.49C and 003.12A of the Nebraska Public Service Commission Telecommunications Rules and Regulations:

1. **Applicant's Form of Organization (§ 002.49C1; §§ 003.12A1-A5).** TWCIS is a limited liability company organized under the laws of the State of Delaware. Attached hereto as **Exhibit A** are a) a true and correct copy of the Applicant's Delaware Certificate of Formation, b) a true and correct copy of Applicant's Certificate of Authority to transact business in the state of Nebraska, and c) a copy of Applicant's Operating Agreement. Delaware does not require Articles of Organization for limited liability companies.

2. **Applicant's Contact Information (§ 002.49C2; § 003.12.A6).** The Applicant's name, address, and telephone numbers are as follows:

Name:	Time Warner Cable Information Services (Nebraska), LLC
Nebraska office:	5400 S. 16th Street Lincoln, Nebraska 68516-1278 Telephone: (402) 421-0300
Connecticut office: (principal place of business)	290 Harbor Drive Stamford, CT 06902 Telephone: (203) 328-0600

A complete listing of the names, business addresses, and telephone numbers of each of the officers and members of TWCIS is attached hereto as **Exhibit B**.

3. **Applicant's Members (§ 002.49C3; § 003.12A7).** The members of TWCIS are Time Warner Cable Inc. and Time Warner Entertainment-Advance/Newhouse Partnership. The names and business addresses of each of these members, as well as a chart setting forth the corporate structure of TWCIS, is attached hereto has **Exhibit C**.

4. **Operations in Other States (§ 002.49C4; § 003.12A8).** TWCIS is a newly formed entity that, at the present time, seeks to transact business solely within the state of Nebraska.

5. **Certifications in Other States (§ 002.49C5; § 003.12A9).** TWCIS is a newly formed entity that has not applied for certification or a permit to provide telecommunications services in any other state. TWCIS' ultimate corporate parent, Time Warner Inc., holds several additional subsidiaries and affiliates that are engaged in the business of offering IP voice services similar to those provided herein throughout the country. A description of the states in which those sister subsidiaries have applied for and/or received certification, including the date of each pending application and the disposition of each application, is attached hereto as **Exhibit D**.

6. **Prior Complaints (§ 002.49C6; § 003.12A10).** No officer, director, member or shareholder having five percent or more of applicant's voting securities nor any of Applicant's business operations have been involved in a formal complaint or other investigatory or enforcement proceeding.

7. **Service Description (§ 002.49C7; § 003.12A11).** TWCIS intends to provide facilities-based local and interexchange Internet Protocol ("IP") voice service targeted to the residential market. It proposes to offer local and interexchange IP voice service in the areas in which its cable television affiliates own and operate cable systems and offer cable television and high speed cable modem Internet services, to the extent it has the facilities and technical capability to serve those areas. Initially, the service will be offered only to customers who subscribe to Time Warner Cable's high-speed, cable modem data service. This service will be offered on a bundled, flat-rate basis and will allow local and long distance calling in addition to operator services, directory assistance, white page directory listings, enhanced 911 services, outbound 800 toll free calling, local number portability, and access to telephone relay services. TWCIS' customers will be able to call and be called by any other IP voice service subscriber of TWCIS. TWCIS' customers will also have access to the public switched telephone network

("PSTN") and thus will be able to call and be called by all other parties connected to the PSTN. Applicant will bill for the Digital Phone monthly package in advance, although additional charges for international calling and Directory Assistance and Operator Services will be billed in arrears. Applicant does not plan to collect deposits. A further description of these services is attached hereto as **Exhibit E**.

8. **Service Area (§ 002.49C8; § 003.12A12).** Attached hereto as **Exhibit F** is a map depicting the proposed service area for which TWCIS is seeking to offer local and long distance services pursuant to this Application. This service area includes all or portions of the exchange areas for the following Nebraska communities: Lincoln, Fremont, Columbus, York, Nebraska City, Seward, Crete, Fairbury, Falls City, Tecumseh, David City, Auburn, Pawnee City, Humboldt, Denton, and Table Rock. TWCIS' ability to provide service within these communities will be limited to areas where Time Warner Cable has necessary technical ability and cable system facilities.

9. **Technical Competency (§ 002.49C9; § 003.12A14).** Personnel and management of TWCIS have extensive experience in all customer service and equipment maintenance matters and will provide TWCIS with the support necessary to handle customer requests for service, service repairs, moves and adds or changes and to insure compliance with the Commission's quality requirements and standards. As set forth above, TWCIS will have local technical and operations staff with substantial local experience and expertise in providing quality customer service. Further information regarding the management and technical support capabilities of TWCIS, including biographical sketches of the core management and technical team, is attached hereto as **Exhibit G.**

10. **Financial Statements (§ 002.49C10; § 003.12A15).** TWCIS is a newly formed entity for which financial statements are not available. The three most recent SEC Forms 10-K for Time Warner Inc., formerly known as AOL Time Warner Inc., the ultimate parent of TWCIS, are attached hereto as **Exhibit H**. This financial data adheres to GAAP and demonstrates that Time Warner Inc. has positive capitalization of $56,038,000,000 and positive working capital of $3,040,000,000.

As a subsidiary of Time Warner Inc. and Time Warner Cable Inc., TWCIS has access to the financing and capital necessary to offer the services and conduct the other operations described in this Application. Specifically, attached hereto as **Exhibit I** is a commitment letter demonstrating Time Warner Cable Inc.'s financial commitment to TWCIS as it enters the local and long distance telephone business in Nebraska.

11. **Annual Report (§ 002.49C11; § 003.12A16).** TWCIS is a newly formed entity for which an annual report is not available. A copy of the three most recent SEC Annual Report 10K filings for Time Warner Inc., formerly known as AOL Time Warner Inc., the closest corporate parent to TWCIS for which such an annual report is prepared in the regular course of business, is attached hereto as **Exhibit H**.

12. **Applicant's Contact for Application Communications (§ 002.49C12; § 003.12A18).** All communications regarding this Application should be directed to the following:

Travis S. Tyler (#21101)
Fraser, Stryker, Meusey, Olson, Boyer & Bloch, P.C.
500 Energy Plaza
409 S. 17th Street
Omaha, NE 68102
(402) 978-5233
fax: (402) 341-8290

and

Julie Y. Patterson
Time Warner Cable
290 Harbor Drive
Stamford, CT 06902
(203) 328-0600
fax: (203) 328-4042

13. **Resident Agent and Customer Complaint Contact (§ 002.49C13; § 003.12A19).** The name and address of Applicant's resident agent is as follows:

Time Warner Cable
Attention: Dick Cassidy
5400 S. 16th Street
Lincoln, NE 68516-1278
(402) 421-0300
fax: (402) 421-0305

Customer complaints will be handled locally by personnel dedicated to IP voice service located at Time Warner Cable's operations in Lincoln, Nebraska. Applicant's contacts for customer complaints are as follows:

Dick Cassidy
Vice President, Operations
Digital Phone
Time Warner Cable
5400 S. 16th Street
Lincoln, NE 68516-1278
(402) 421-0300
fax: (402) 421-0305

and

Julie Y. Patterson
Time Warner Cable
290 Harbor Drive
Stamford, CT 06902
(203) 328-0671
fax: (203) 328-4042
julie.patterson@twcable.com

14. **Other Nebraska Certificates (§ 002.49C14).** Applicant does not hold any certificates or permits in the state of Nebraska to provide telecommunications services other than local exchange services.

15. **Method of Service (§ 002.49C15).** TWCIS' services will be deployed using Time Warner Cable's existing cable system infrastructure (augmented by customer premises equipment and headend equipment), regional IP-switching facilities, and the facilities and services of third party network providers. TWCIS intends to provide local and interexchange voice services via Internet Protocol technology. Using this technology, voice signals are digitized into data packets and routed over private, managed Internet protocol networks. Calls destined for the Public Switched Telephone Network, including calls to 911, Operator Services, and Directory Assistance, are routed by Applicant's softswitch device to a media gateway device, which serves to convert the digitized voice packets into traditional, circuit-switched format, permitting termination of the call over the PSTN. TWCIS' softswitch will be located in Kansas City, Missouri, and the media gateway device will be located in Lincoln, Nebraska.

16. **Directory and Operator Assistance (§ 002.49C16).** Applicant's service will include directory assistance and operator assistance services. These services will be provided through a business relationship with a third party provider. A description of that relationship and the provision of directory assistance and operator assistance services pursuant thereto, is attached hereto as **Exhibit J.**

17. **911 Services (§ 002.49C17).** TWCIS will provide enhanced emergency 911 services in compliance with all applicable state and federal requirements. A summary of TWCIS' plan for providing E911 services is attached hereto as **Exhibit K.**

18. **Telephone Relay Service (§ 002.49C18).** TWCIS will provide Telephone Relay Service in compliance with all applicable state and federal requirements. A summary of TWCIS' plan for providing Telephone Relay Service is attached hereto as **Exhibit L.**

19. **Compliance with Laws (§ 002.49C19).** Subject to its reservation of rights set forth in this Application, Applicant agrees that it will adhere to all state laws and all Commission policies rules and orders.

20. **Sample Tariff (§ 002.49C20).** A sample tariff setting forth TWCIS' proposed services to be offered is attached hereto as **Exhibit M.** TWCIS expects to file a final tariff for approval by the Commission in the coming weeks.

21. **Applicant's Communications Network (§ 003.12A13).** TWCIS' services will be deployed using Time Warner Cable's existing cable system infrastructure (augmented by customer premises equipment and headend equipment), regional IP-switching facilities, and the facilities and services of third party network providers. Time Warner Cable's network consists of hybrid fiber-coaxial 750 Mhz cable facilities, with fiber optic facilities deployed throughout Time Warner Cable's service area. Time Warner Cable owns and operates these facilities and recently completed its fiber optic upgrade to these facilities, investing more than $50 million in its Nebraska network. The Time Warner Cable network also supports two-way cable television services and high-speed cable modem Internet services. Time Warner Cable conducts extensive monitoring of its network in providing these services, as well as regular and continual maintenance of its cable plant on a daily basis.

22. **Investment Schedule (§ 003.12A17).** As indicated above, Applicant's financial resources will be derived from entities that have achieved profitability and hold substantial assets and revenues in related lines of business; therefore, a break-even analysis is not applicable.

IV. CONCLUSION

The information contained in the Application and in the exhibits fully describes the Applicant's business and its ability to provide end-users and customers in Nebraska with a viable and economical alternative telecommunications service. By this Application and exhibits, the Applicant demonstrates that it has the resources and ability to provide its services for the benefit of the public.

WHEREFORE, the Applicant requests that the Nebraska Public Service Commission enter an order granting a certificate authorizing the Applicant to provide local and interexchange telephone services pursuant to Nebraska Revised Statutes §§ 86-128 and 86-129 (2002 Cum Supp), and Title 291, Article 5 §§ 002.49 and 003.12A of the Nebraska Public Service Commission Telecommunications Rules and Regulations

Respectfully submitted,

By: _____

Travis S. Tyler (#21101)
Fraser, Stryker, Meusey, Olson, Boyer & Bloch, P.C.
500 Energy Plaza
409 S. 17th Street
Omaha, Nebraska 68102
(402) 978-5233
fax: (402) 341-8290

EXHIBIT A

CERTIFICATE OF FORMATION, CERTIFICATE OF AUTHORITY TO DO BUSINESS, AND OPERATING AGREEMENT

[See Attached]

EXHIBIT B

LIST OF MEMBERS AND OFFICERS OF TWCIS

Members of TWCIS

Time Warner Cable Inc.
290 Harbor Drive
Stamford, CT 06902
(203) 328-0600

Time Warner Entertainment/Advance-Newhouse Partnership
290 Harbor Drive
Stamford, CT 06902
(203) 328-0600

Officers of TWCIS

Carl Rossetti, President
290 Harbor Drive
Stamford, CT 06902
(203) 328-0600

Elizabeth Scarborough, President, Nebraska Group
5400 S. 16th Street
Lincoln, NE 68516
(402) 421-0300

Gerald Campbell, Senior Vice President
290 Harbor Drive
Stamford, CT 06902
(203) 328-0600

Gail Allaman, Vice President, Tax
7910 Crescent Executive Drive
Charlotte, NC 28217
(704) 731-3000

Curtis Kriner, Treasurer
7910 Crescent Executive Drive
Charlotte, NC 28217
(704) 731-3000

Julie Patterson, Secretary
290 Harbor Drive
Stamford, CT 06902
(203) 328-0600

David Christman, Assistant Secretary
290 Harbor Drive
Stamford, CT 06902
(203) 328-0600

Warren McDonald, Assistant Treasurer
7910 Crescent Executive Drive
Charlotte, NC 28217
(704) 731-3000

EXHIBIT C

MEMBERS AND CORPORATE ORGANIZATION CHART

Members of TWCIS:

Time Warner Cable Inc.
290 Harbor Drive
Stamford CT 06902
(203) 328-0600

Time Warner Entertainment-Advance/Newhouse Partnership
290 Harbor Drive
Stamford, CT 06902
(203) 328-0600

Organization Chart

[Provided on the next page]

Time Warner Cable Information Services (Nebraska), LLC

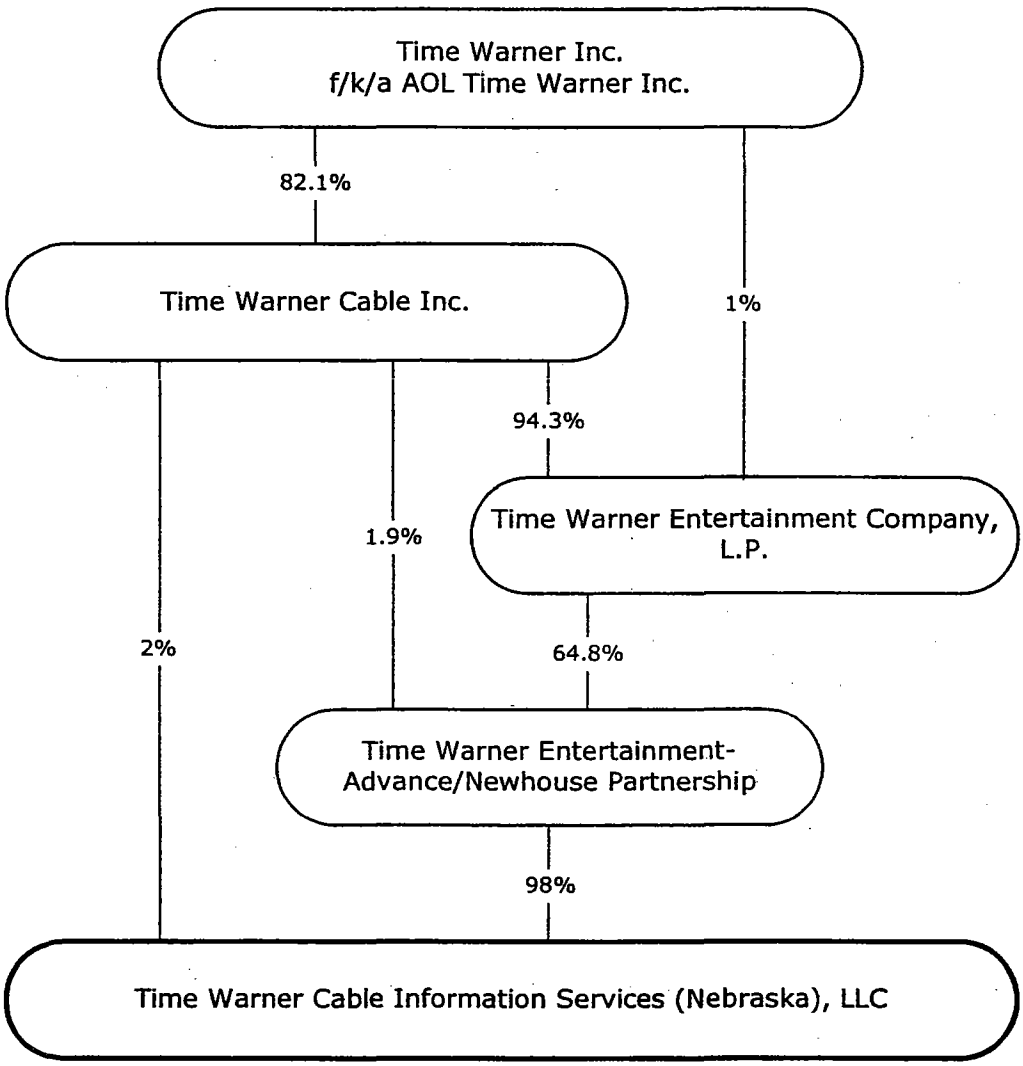

W356067.01

EXHIBIT D

DESCRIPTION OF THE STATES IN WHICH SISTER SUBSIDIARIES HAVE APPLIED FOR AND/OR RECEIVED CERTIFICATION, INCLUDING THE DATE OF EACH PENDING APPLICATION AND THE DISPOSITION OF EACH APPLICATION

On February 11, 2003, Applicant's affiliate, Time Warner Cable Information Services (Maine), LLC, was certificated by the Maine Public Utilities Commission to provide local and long distance IP voice services in Maine.

On July 24, 2003, Applicant's affiliate, Time Warner Cable Information Services (North Carolina), LLC, was certificated by the North Carolina Utilities Commission to provide local and long distance IP voice services in North Carolina.

On December 17, 2003, Applicant's affiliate, Time Warner Cable Information Services (Ohio), LLC, was authorized by the Public Utility Commission of Ohio to provide local and long distance IP voice services in Ohio.

On January 21, 2004, Applicant's affiliate, Time Warner Cable Information Services (Texas), L.P., was certificated by the Texas Public Utility Commission to provide local and long distance IP voice services in Texas.

On February 3, 2004, Applicant's affiliate, Time Warner Cable Information Services (Kansas), LLC, as certificated by the Kansas Corporation Commission to provide local and long distance IP voice services in Kansas.

On March 12, 2004, Applicant's affiliate, Time Warner Cable Information Services (Missouri), LLC, was certificated by Public Service Commission of Missouri to provide local and long distance IP voice services in Missouri.

On March 16, 2004, Applicant's affiliate, Time Warner Cable Information Services (California), LLC, was certificated by the California Public Utilities Commission to provide local and long distance IP voice services in California.

On May 24, 2004, Applicant's affiliate, Time Warner Cable Information Services (South Carolina), LLC, was certificated by the South Carolina Public Service Commission to provide local and long distance IP voice services in South Carolina.

On June 4, 2004, Applicant's affiliate, Time Warner Cable Information Services (Minnesota), LLC, was certificated by the Minnesota Public Utilities Commission to provide local and long distance IP voice services in Minnesota.

In 1993, Applicant's affiliate, Time Warner Cable ResCom of New York, LLC, was certificated by the New York Public Service Commission to provide local and long distance telecommunications services in New York.

On April 15, 2004, Applicant's affiliate, Time Warner Cable Information Services (Wisconsin), LLC, filed an application before the Wisconsin Public Service Commission to provide local and long distance IP voice services in Wisconsin.

On May 20, 2004, Applicant's affiliate, Time Warner Cable Information Services (New Hampshire), LLC, filed an application with the New Hampshire Public Utilities Commission to provide local and long distance IP voice services in New Hampshire.

On June 2, 2004, Applicant's affiliate, Time Warner Cable Information Services (Hawaii), LLC, filed an application before the Hawaii Public Utilities Commission to provide local and long distance IP voice services in Hawaii.

In addition, to the extent that such relationship is relevant to the Application, Time Warner Inc. indirectly owns an aggregate equity interest of approximately 44% of the stock of Time Warner Telecom Inc., which is the parent company of numerous telecommunications subsidiaries throughout the nation. Time Warner Inc. is the parent company of Time Warner Cable Inc. and Time Warner Entertainment-Advanced/Newhouse Partnership ("TWE/AN"), the two members of the Applicant. However, Time Warner Inc.'s nominees to the Board of Directors of Time Warner Telecom are limited to less than a majority by the terms of a stockholder agreement. Time Warner Telecom is a separately-managed public company whose stock is traded through NASDAQ and its financial results are not consolidated with those of Time Warner Inc.

Neither TWCIS nor its corporate affiliates have been denied requested authority to provide telecommunications services in any state.

EXHIBIT E

DESCRIPTION OF SERVICES

Applicant's affiliate, Time Warner Cable, currently provides cable television and high-speed cable modem (data) services to customers in the proposed service areas. Upon certification by the Commission, Applicant will initiate an Internet Protocol ("IP") voice service ("IP Voice Service") offering directed to Time Warner Cable residential customers only. Parties subscribing to Time Warner Cable cable television service, cable modem service, or both services will be eligible to become customers of Applicant's IP Voice Service.

The Applicant intends to provide facilities-based local and interexchange Internet protocol ("IP") voice service targeted to the residential market. Initially, the service will be offered only to customers who subscribe to Time Warner Cable's high-speed cable modem data service. Applicant's customers will be able to call and be called by any other IP voice service subscriber of Applicant. IP voice service subscribers will also have access to the public switched telephone network ("PSTN") and thus will be able to call and be called by all other parties connected to the PSTN. The service will be offered on a flat-rate basis and will allow standard local and long distance calling in addition to operator services; directory assistance; Enhanced 911 services; outbound 800 toll free calling; directory listings; access to the Telecommunications Relay Service; and local number portability. Applicant's IP Voice Service customers will be able to place and receive calls to and from any point on the Public Switched Network. Applicant's rate plan will feature a flat monthly payment which will entitle the Customer to unlimited local and long distance calling throughout the United States. Calls to international locations and to Operator Services and Directory Assistance will be billed for an additional charge at competitive rates. In addition, voicemail will be available to customers for an additional, optional charge.

Applicant's proposed services will utilize VoIP technology and will be provided pursuant to the PacketCable standard, which was developed by CableLabs, a research organization serving the cable television industry. PacketCable is a specification that provides a series of protocols and standards defining the delivery of voice service over the upgraded, digital, high-speed cable network. The Applicant's IP voice services will originate from a voice-enabled cable modem at the customer's premise and travel, in packet form, over the same path currently used to provide Time Warner Cable cable modem service. At the Time Warner Cable headend, the voice and data packets will travel to a cable modem termination system ("CMTS"), at which point the data packets will travel to the Internet and the voice packets will travel to Applicant's softswitch device, which will control the call set-up and signaling. The softswitch device will determine whether the telephone call being made by Applicant's subscriber is directed to another subscriber of the Applicant (i.e., an "on-net" call) or to a person served on the Public Switched Telephone Network ("PSTN") by a traditional LEC (i.e., an "off-net" call). If the call is an on-net call, then the voice packets will be directed by the softswitch device to another cable modem termination system ("CMTS") on Applicant's network and be terminated to another voice-enable cable modem. If the call is an off-net call, then the softswitch device will route the call to a Media Gateway Device, which will convert the IP voice packets to traditional TDM format and direct the call to the PSTN for termination.

TWCIS does not currently intend to provide its IP voice service in Nebraska through an interconnection agreement with any incumbent LEC. Rather, TWCIS has entered into a business relationship with a competitive LEC partner in order to provide access to enhanced 911 services, operator services and directory assistance, and termination to the PSTN. In the case of calls destined to customers who are not TWCIS customers, then TWCIS softswitch device will route the call to a Media Gateway Device, which will convert the IP voice packets to traditional TDM format, and then direct the call to TWCIS' competitive LEC partner, whose local switch will direct the call to either local interconnection trunks, in the case of local traffic, or interexchange trunks, in the case of interexchange traffic. TWCIS' competitive LEC partner will also carry all of TWCIS' interexchange traffic.

All appropriate intercarrier compensation will be paid on calls terminating to the PSTN in accordance with existing compensation regimes, and the jurisdiction of each call (i.e., whether it is a local, intrastate toll, or interstate toll call) made by a Time Warner Cable customer will be determined based upon the called and calling party numbers and not on the location that the call begins to traverse the PSTN. In addition, telephone numbers assigned to customers will be assigned in accordance with existing rate center and area code boundaries and, to the extent applicable, in accordance with pooling guidelines.

EXHIBIT F

MAP OF PROPOSED SERVICE AREA

[See Attached]

EXHIBIT G

FURTHER INFORMATION REGARDING THE MANAGEMENT AND TECHNICAL SUPPORT CAPABILITIES OF TWCIS

The Applicant will rely on the individuals identified in the following bios for technical and managerial support in providing services in Nebraska as described in this Application. Through arrangements with its affiliate Time Warner Cable, TWCIS will have sufficient managerial and technical capability to ensure that TWCIS can provide the services for which it seeks certification. The management teams at Time Warner Cable, based in Stamford, Connecticut and Lincoln, Nebraska, include individuals with extensive experience in successfully developing and operating communications businesses, including local telephone businesses. Moreover, Time Warner Cable possesses the internal managerial resources to support its Nebraska operations. Certain persons that are part of the management teams at Time Warner Cable will also be officers of TWCIS. Their expertise in telecommunications makes the Time Warner Cable management team well-qualified to construct and operate facilities on behalf of TWCIS. In addition, the officers and management of Time Warner Cable also have the technical expertise, developed through designing, constructing, and operating telecommunications networks, to provide the proposed services. Specific technical experience of officers and management of TWCIS can be found below.

Biographical Sketches of TWCIS Management

Carl Rossetti, President

Carl Rossetti is President of TWCIS (Nebraska) and Executive Vice President of Time Warner Cable, a position he has held since 1998. Mr. Rossetti joined Time Warner Cable in 1976 and has held numerous management positions, including Division President of Time Warner Cable's New England Division in Portland, Maine and interim CEO of Road Runner, the high-speed online service delivered through cable modems and over the cable television infrastructure. In this position, Mr. Rossetti was responsible for overall strategic planning to grow the business and maintain Road Runner's commitment to providing premier high-speed access service. Mr. Rossetti has also served as Time Warner Cable's Senior Vice President of Corporate Development, where he managed and oversaw all of the company's international investments, negotiated non-cable and vendor agreements including acquisitions, mergers and disposition of assets. Additionally, Mr. Rossetti served as Interim CEO of Time Warner Telecom, where he helped initiate Time Warner Cable's efforts to branch into the competitive local exchange business.

Elizabeth Scarborough, President, Nebraska Group

Elizabeth Scarborough, President of the Nebraska Division of Time Warner Cable, has been with Time Warner Cable since 1981, holding a variety of marketing and management positions in a

number of Time Warner Cable locations in Florida, Louisiana and Georgia. Ms. Scarborough came to Nebraska in 1996, moving from a similar role in Time Warner Cable's Savannah, Georgia system. The Nebraska Division includes 22 political subdivisions throughout Eastern Nebraska, with the largest system in Lincoln. Ms. Scarborough and her staff of almost 300 are responsible for all video, high speed data, and Digital Phone deployments for these locations. Ms. Scarborough holds an ABJ in Publication Management and MBA from the University of Georgia.

Gerald D. Campbell, Senior Vice President

Gerald Campbell is currently Time Warner Cable's Senior Vice President, Voice, responsible for developing the company's IP voice business. Mr. Campbell brings to Time Warner nearly 30 years of experience in the cable and telephone industries. Mr. Campbell spent nearly ten years with Comcast Communications in senior management roles and developed and built the company's voice business in the United Kingdom. Prior to joining Comcast, Mr. Campbell held executive positions with Cablevision of Boston and Warner Communications.

Sam Howe, Senior Vice President

Sam Howe is Senior Vice President of Marketing for Voice Services at Time Warner Cable. He is responsible for the development, roll out and management of all marketing initiatives for Time Warner Cable's IP based voice service called Digital Phone. Prior to joining Time Warner Cable, Mr. Howe operated his own company, Howe Strategic, where he provided marketing, planning and business development consultation to companies in the media industry. Mr. Howe's telephone experience was acquired in the United Kingdom from 1993-1998, where he spent three years as Senior Vice President of TeleWest plc, a leading telecommunications company providing cable television, telephone and ISP services. Prior to that Howe spent two years as Group Director of marketing at SBS Cablecomms, Inc. a 50/50 partnership between Cox Communications Inc. and Southwestern Bell Inc. Mr. Howe began his career working in the cable industry and eventually spent nine years at Cox Communications, Inc. where he held various positions in finance and marketing. Mr. Howe holds a B.A. from Bowdoin College in Brunswick, Maine and a MBA from the Kellogg Graduate School of Management at Northwestern University.

Dick Cassidy, Vice President, Operations-Lincoln, Nebraska Division

Dick Cassidy is the Vice President of Operations for the Nebraska Division of Time Warner Cable. Mr. Cassidy has been with Time Warner since 2000, holding various operations and management positions. Mr. Cassidy came to Nebraska in 2000 from a management position in Denver with Verio, a large shared data web hosting company, which is a division of NTT (Nippon Telephone and Telegraph). Dick holds a BS degree in Education from Colorado State University and an MBA from the University of Colorado.

Liliane Zreik, Vice President—Engineering

Liliane Zreik started her career with NYNEX Corp (now Verizon), where she became responsible for developing and introducing new telephone services leveraging advanced technologies such as automatic speech recognition and intelligent networking. She was a key member of the team responsible for implementing LNP and 3rd party access for NYNEX. Ms. Zreik initiated and drove the solutions marketing effort for Sonus Networks, a softswitch vendor, and was a key executive for BB2W, a startup company that deployed 802.11-based wireless high speed access. Ms. Zreik also led implementations of new technologies in call centers. In addition to her extensive technical experience, Ms. Zreik was a high yield bond analyst covering cable and technology for an investment firm. Ms. Zreik holds an MBA from Harvard University, a Master in Electrical Engineering from Cornell University, and a BSEE from Syracuse University.

Julie Patterson, Secretary

Julie Patterson is Assistant General Counsel for Time Warner Cable in Stamford, Connecticut. After practicing communications law in private practice, Ms. Patterson served as an Attorney Advisor in the Common Carrier Bureau of the Federal Communications Commission, where she worked on issues relating to local telephone competition, the deployment of broadband services, Bell Operating Company section 271 applications, and communications and media mergers. Ms. Patterson has a B.A. degree from the University of Pennsylvania and a J.D. degree from the College of William and Mary.

EXHIBIT H

**SEC 10K ANNUAL REPORTS OF TIME WARNER INC.
(F/K/A AOL TIME WARNER INC.)
FOR 2001, 2002 AND 2003**

[See Attached]

EXHIBIT I

FINANCIAL COMMITMENT LETTER

[See Attached]

EXHIBIT J

DESCRIPTION OF DIRECTORY ASSISTANCE AND OPERATOR SERVICES

Through its relationship with a third party competitive LEC, TWCIS will provide its customers with complete local, intrastate, and national Directory Assistance and Operator Services, each of which will be branded as Time Warner Cable services. As discussed herein, call destined for "off-net" locations on the PSTN will be converted from Internet Protocol format into traditional, circuit switched format and then routed to their final PSTN destination for termination. All Directory Assistance and Operator Service calls will, therefore, be converted from Internet Protocol format into traditional circuit switched format by TWCIS' Media Gateway Device and be routed and delivered to TWCIS' competitive LEC partner, which will provide the TWCIS-branded Directory Assistance and Operator Services.

EXHIBIT K

SUMMARY OF E911 SERVICES

As described herein, Applicant's proposed services will utilize VoIP technology and will be provided pursuant to the PacketCable standard, which was developed by CableLabs, a research organization serving the cable television industry. PacketCable is a specification that provides a series of protocols and standards defining the delivery of voice service over the upgraded, digital, high-speed cable network. The Applicant's IP voice services will originate from a voice-enabled cable modem at the customer's premise and travel, in packet form, over the same path currently used to provide Time Warner Cable cable modem service. At the Time Warner Cable headend, the voice and data packets will travel to a cable modem termination system ("CMTS"), at which point the data packets will travel to the Internet and the voice packets will travel to Applicant's softswitch device, which will control the call set-up and signaling. The softswitch device will determine whether the telephone call being made by Applicant's subscriber is directed to another subscriber of the Applicant (i.e., an "on-net" call) or to a person served on the Public Switched Telephone Network ("PSTN") by a traditional LEC (i.e., an "off-net" call). If the call is an on-net call, then the voice packets will be directed by the softswitch device to another cable modem termination system ("CMTS") on Applicant's network and be terminated to another voice-enable cable modem. If the call is an off-net call, then the softswitch device will route the call to a Media Gateway Device, which will convert the IP voice packets to traditional TDM format and direct the call to the PSTN for termination.

In connection with 9-1-1 services, TWCIS will route all 9-1-1 calls from the Media Gateway Device to the appropriate Public Safety Answering Point "PSAP." In doing so, TWCIS will pass not only the Automatic Number Information associated with the call, but also the Automatic Location Information associated with the call, making the 9-1-1 services provided fully enhanced. Location information will be based upon the subscriber's service address. When customers are provisioned on the proposed TWCIS service, TWCIS will utilize the Master Street Address Guide ("MSAG") to confirm that valid addresses are available for 9-1-1 calls made by TWCIS customers; update the MSAG and 9-1-1 databases for TWCIS customers; and submit necessary corrections to inaccurate subscriber information. In routing 9-1-1 calls to the appropriate PSAP, TWCIS will work with a competitive LEC partner whose local switch will direct the call to 9-1-1 tandem switch and/or PSAPs for completion of 9-1-1 calls in each particular service area.

EXHIBIT L

SUMMARY OF TELEPHONE RELAY SERVICE PLAN

Through its relationship with a third party competitive LEC, TWCIS will provide its customers with complete access to Telecommunications Relay Service/7-1-1 services. As discussed herein, call destined for "off-net" locations on the PSTN will be converted from Internet Protocol format into traditional, circuit switched format and then routed to their final PSTN destination for termination. All 7-1-1 dialed calls will, therefore, be converted from Internet Protocol format into traditional circuit switched format by TWCIS' Media Gateway Device; delivered to TWCIS' competitive LEC partner; and then be routed by TWCIS' competitive LEC partner to the appropriate 7-1-1 center. All connectivity to 7-1-1 centers will be managed by TWCIS' competitive LEC partner. In addition, T-T-Y devices will be interoperable with the Digital Phone service.

EXHIBIT M

SAMPLE TARIFF SETTING FORTH TWCIS' PROPOSED SERVICES TO BE OFFERED

[See Attached]

BEFORE THE MINNESOTA PUBLIC UTILITIES COMMISSION

LeRoy Koppendrayer	Chair
Ken Nickolai	Commissioner
Gregory Scott	Commissioner
Marshall Johnson	Commissioner
Phyllis Reha	Commissioner

Todd G. Hartman
Robins, Kaplan, Miller & Ciresi, LLP
2800 LaSalle Plaza
800 LaSalle Avenue
Minneapolis, MN 55402-2015

SERVICE DATE: MAY -4 2004

DOCKET NO. P-6365/NA-04-332

In the Matter of the Application of Time Warner Cable Information Services (Minnesota), LLC d/b/a Time Warner Cable for a Certificate of Authority to Provide Facilities Based Local Exchange and Interexchange Services

The above entitled matter has been considered by the Commission and the following disposition made:

Approved the application for a conditional certificate of authority to provide interexchange service on a statewide basis and facilities based local exchange services in the following communities as reflected on the service area maps included with the February 27, 2004 filing: the communities of Bloomington, Eden Prairie, Edina, Fridley, Hopkins, Minneapolis, Minnetonka, Richfield, St. Louis Park, and Shakopee which are currently served by Qwest Corporation; the communities of Carver and Chaska which are currently served by Sprint Minnesota; the community of Jordan which is currently served by Frontier Communications of Minnesota; the community of Madelia which is currently served by Christianson Communications; the communities of Waverly and Montrose which are currently served by Lakedale Telephone Company; the community of New Ulm which is currently served by New Ulm Telephone; and the community of New Prague which is currently served by Eckles Telephone Company;

Granted a variance under Minn. Rules pt. 7829.3200 to the notification requirements in Minn. Rules pt. 7812.0200, subpt. 6;

Conditions to receive operational authority for interexchange service:

1. **Commission approval of a long distance tariff;**

12

Conditions to receive operational authority for facilities based local exchange services:

2. **Commission approval of 911 plan**
3. **Commission approval of a local tariff**

The applicant may not provide local services until all conditions listed above have been fulfilled.

This decision is issued by the Commission's consent calendar subcommittee, under a delegation of authority granted under Minn. Stat. § 216A.03, subd. 8 (a). Unless a party, a participant, or a Commissioner files an objection to this decision within ten days of receiving it, it will become the Order of the full Commission under Minn. Stat. § 216A.03, subd. 8 (b).

The Commission agrees with and adopts the recommendations of the Department of Commerce which are attached and hereby incorporated in the Order.

BY ORDER OF THE COMMISSION

Burl W. Haar
Executive Secretary

(S E A L)

This document can be made available in alternative formats (i.e., large print or audio tape) by calling (651) 297-4596 (voice) or 1-800-627-3529 (TTY relay service).

MINNESOTA
DEPARTMENT OF
COMMERCE

85 7th Place East, Suite 500
St. Paul, Minnesota 55101-2198
651.296.4026 FAX 651.297.1959 TTY 651.297.3067

RECEIVED
APR 21 2004
MN PUBLIC UTILITIES COMMISSION

April 19, 2004

Burl W. Haar
Executive Secretary
Minnesota Public Utilities Commission
121 7th Place East, Suite 350
St. Paul, Minnesota 55101-2147

RE: In the Matter of the Application of Time Warner Cable Information Services (Minnesota), LLC d/b/a Time Warner Cable for a Certificate of Authority to Provide Local Exchange and Interexchange Services
Docket No. P6365/NA-04-332

Dear Dr. Haar:

Applications for certificates of authority may be approved without hearing under Minn. Stat. § 216A.03, subd. 7. The Public Utilities Commission's (Commission's) Order designating certain applications for certificates of authority as being subject to a standing order was issued on August 25, 2000 in Docket No. P999/CI-00-634. The use of a standing order is to apply to filings submitted on or after September 1, 2000.

As required by the Commission's August 25, 2000 Order, the Department of Commerce (Department) has reviewed and analyzed the current filing. Attached is the Department's checklist for processing applications for certificates of authority. The checklist reflects the Department's analysis of the issues relating to the requirements of Minnesota law and the Commission's rules.

The application for certification was filed on: February 27, 2004

The name of the applicant: Time Warner Cable Information Services (Minnesota), LLC d/b/a Time Warner Cable

The application requested the following type of certification: Certificate of Authority to provide Facilities Based Local Exchange and Interexchange Services

The application for certification was filed by:

Todd G. Hartman
Robins, Kaplan, Miller & Ciresi, LLP
2800 LaSalle Plaza
800 LaSalle Avenue
Minneapolis, Minnesota 55402-2015

0825

Recommended Action: Approve of the application for an Conditional Certificate of Authority to provide Interexchange Service on a statewide basis and Facilities Based Local Exchange Services in the following communities as reflected on the service area maps included with the February 27, 2004 filing: the communities of Bloomington, Eden Prairie, Edina, Fridley, Hopkins, Minneapolis, Minnetonka, Richfield, St. Louis Park, and Shakopee which are currently served by Qwest Corporation; the communities of Carver and Chaska which are currently served by Sprint Minnesota; the community of Jordan which is currently served by Frontier Communications of Minnesota; the community of Madelia which is currently served by Christianson Communications; the communities of Waverly and Montrose which is currently served by Lakedale Telephone Company, the community of New Ulm which is currently served by New Ulm Telecom; and the community of New Prague which is currently served by Eckles Telephone Company. Grant a variance under Minn. Rules pt. 7829.3200 to the notification requirements in Minn. Rules pt. 7812.0200, subpt. 6.

The Department does not believe that an interconnection is required pursuant to Minn. Rules pt. 7812.0200, subd. 3A, because the applicant will not interconnect directly with the local exchange carrier.

Conditions to Receive Operational Authority for Interexchange Service:

1. Commission approval of a long distance tariff

Conditions to Receive Operational Authority for Facilities Based Local Exchange Services:

2. Commission approval of 911 plan
3. Commission approval of a local tariff

The applicant may not provide local services until all conditions listed above have been fulfilled.

The Department's analysis finds that the Application for Certification complies with the Commission's requirements as indicated on the attached checklists. The Department is submitting this memorandum recommending that the Commission approve the Application for Certification either at a Commission hearing or by way of the standing order process approved by the Commission on August 25, 2000.

Sincerely,

DIANE DIETZ
Rate Analyst
Telecommunications

DD/ja
Attachment

Company: Time Warner Cable Information Services (Minnesota), LLC d/b/a Time Warner Cable
Docket No.: P6365/NA-04-332

CHECKLIST FOR PROCESSING APPLICATIONS FOR CERTIFICATES OF AUTHORITY

I. TYPE OF CERTIFICATION REQUESTED BY APPLICANT

✓ A. Facilities-based local exchange company (Note, Minn. Rules pt. 7812.0200, subpt. 2 states that a certificate to provide facilities–based local exchange service authorizes the provision of all forms of local service, interexchange service, and local niche service in Minnesota)
- ✓ i. Conditional certificate of authority
- ___ ii. Operational certificate of authority (not subject to standing Order)

___ B. Resale of local exchange service
- ___ i. Conditional certificate of authority
- ___ ii. Operational certificate of authority

___ C. Long Distance Service
- ___ i. Conditional certificate of authority
- ___ ii. Operational certificate of authority

___ D. Local Niche Service
- ___ i. Conditional certificate of authority
- ___ ii. Operational certificate of authority

II. GEOGRAPHIC AREA OF CERTIFICATION

___ A. Facilities-based local exchange company
- ___ a. Exchanges served by Citizens Telecommunications of Minnesota Inc.
  - ___ statewide
  - ___ other (specify exchanges) _____
- ✓ b. Exchanges served by Qwest Corporation Bloomington, Eden Prairie, Edina, Fridley, Hopkins, Minneapolis
  - ___ statewide
  - ✓ other (specify ~~exchanges~~ communities) Minnetonka, Richfield, St. Louis Park, Shakopee
- ✓ c. Exchanges served by Sprint Minnesota
  - ___ statewide
  - ✓ other (specify ~~exchanges~~ communities) Carver, Chaska
- ✓ d. Exchanges served by Frontier Communications of Minnesota
  - ___ statewide
  - ✓ other (specify exchanges) Jordan
- ✓ e. Exchanges served by the following incumbent local exchange companies: Christianson Communications, Lakedale Telephone Company, Eckles Telephone Co.
  - ___ statewide
  - ✓ other (specify ~~exchanges~~ communities) Madelia, Montrose, Waverly, New Prague

___ B. Resale of local exchange service
- ___ a. Exchanges served by Citizens Telecommunications of Minnesota Inc.
  - ___ statewide
  - ___ other (specify exchanges) _____
- ___ b. Exchanges served by Qwest Corporation

Company:
Docket No.: P 6365/ NA-04-332

_____ statewide
_____ other (specify exchanges) _____

____c. Exchanges served by Sprint Minnesota
_____ statewide
_____ other (specify exchanges) _____

____d. Exchanges served by Frontier Communications of Minnesota
_____ statewide
_____ other (specify exchanges) _____

____e. Exchanges served by the following incumbent local exchange companies:
_____
_____
_____ statewide
_____ other (specify exchanges) _____

✓ C. Long Distance Service
✓ i. Statewide
____ii. Other (specify)

____D. Local Niche Service
____i. Statewide
____ii. Other (specify)

III. APPLICATION REQUIREMENTS OF THE APPLICANT

Minn. Stat. §237.16, subd. 1(b) and §237.74 , subd. 12 mandate that companies obtain a certificate of authority prior to offering regulated telecommunications services in Minnesota. A conditional certificate of authority is permitted under Minn. Rules pts. 7812.0300, subpt. 4 and 7812.0350, subpt. 4 when the submission and Commission approval of tariffs and interconnection agreements is a prerequisite for providing the services identified in the applicable petition for certification. The requirements for certification for providers of facilities-based local exchange service, resellers of local exchange service, long distance service, and local niche services are listed in Minn. Rules pt. 7812.0300, 7812.0350, 7812.0400, and 7812.0500 respectively.

Minn. Rules pt. 7812.0300, subpt. 2 (parts A through N) describe the application requirements and the decision criteria for granting a certificate of authority. Companies applying for certification to provide long distance, local niche, or resale of local service must meet A to L of the filing requirements, except for the information, relevant to facilities–based local exchange service providers, which is identified in Minn. Rules pt. 7812.0300, subpt. 2, items G and K. The application requirements of Minn. Rules pt. 7812.0300, subpt. 2 (A through N) are as follows:

✓ A. Company has the managerial, technical and financial ability, required under Minnesota law, to provide telecommunications services in Minnesota.

✓ B. All applications must include the applicant's full legal name and address, including the address of the applicant's place of business; if a corporation, the names, addresses, telephone numbers, and business experience of its officers; if a partnership or limited liability partnership, the names, addresses, telephone numbers, and business experience of persons authorized to bind the partnership; or, if a limited liability company, the names, addresses, and telephone numbers of its managers;

Company:
Docket No.: P6365/NA- 04-332

✓ C. All applications must include a description of the applicant's organizational structure, including documentation identifying the petitioner's legal status, for example, sole proprietorship, partnership, limited liability partnership, company, limited liability company, corporation, and so forth; a copy of its articles of incorporation; and, a list of shareholders, partners, or members owning ten percent or more of the interest in the business;

✓ D. All applications must include a list of the applicant's affiliates, subsidiaries, and parent organizations, if any;

✓ E. All applications must include a description of the nature of the applicant's business, including a list of the services it provides;

✓ F. All applications must include a description of the applicant's business history, including: (1) the date the business was first organized, the dates of subsequent reorganizations, and the date the applicant started providing telephone or other telecommunications services; and (2) the applicant's experience providing telephone company services or telecommunications services in Minnesota and other jurisdictions, including the types of services provided, the dates and nature of state or federal authorization to provide those services, the length of time it has provided those services, and pending or completed criminal, civil, or administrative action taken against the applicant by a state or federal authority, including any settlements, in connection with the applicant's provision of telephone company services or telecommunications services;

✓ G. All applications must include a financial statement of the applicant, for the most recent fiscal year and the financial statement must consist of a balance sheet, an income statement, notes to the financial statement, and, if available, an annual report;
✓ (i) Positive equity (required for facilities-based authority)
✓ (ii) Company has the financial capacity necessary for the proposed undertaking

✓ H. Applications for facilities-based authority must include a list and description of the types of services the applicant seeks authority to offer: (1) including the classes of customers the applicant intends to serve; (2) indicating the extent to which it intends to provide service through use of its own facilities, the purchase of unbundled network elements, or resale; (3) identifying the types of services it seeks authority to provide by reference to the general nature of the service, for example, voice, custom calling, signaling, information, data, and video; and (4) listing the technology that will be used to deliver the service, for example, fiber-optic cable, digital switches, or radio;

___ I. All applications must include a proposed price list or tariff setting forth the rates, terms, and conditions of each service offering, unless the applicant is seeking a conditional certificate under subpart 4 and has not yet developed the information listed in this item;
___ (i) Tariff checklist is satisfactory

✓ J. Applications for authority to provide local exchange service must include a service area map providing the information required under part 7810.0500, subpart 2, and narrative description of the area for which the applicant is seeking certification, except that if the applicant does not have the necessary agreements or tariffs to serve the entire area for which certification is sought, a map providing the information required under part 7810.0500, subpart 2, and a narrative delineating specifically those areas in which the applicant is currently prepared to provide service. Note also that applications for authority to provide local niche service must include a narrative description of the area for which the applicant is seeking certification;

Company:
Docket No.: P6365/NA-04-332

✓ K. All applications must include the date by which the applicant expects to offer local service to the entire service area for which the applicant is seeking certification, including the applicant's estimated timetable for providing at least some of its services through use of its own network facilities;

✓ L. Applications for facilities-based authority must include a description of the applicant's policies, personnel, and equipment or arrangements for customer service and equipment maintenance, including information demonstrating the applicant's ability to respond to customer complaints and inquiries promptly and to perform maintenance necessary to ensure compliance with the quality requirements set forth in the Commission's rules;

✓ M. All applications must include a copy of the applicant's certificate to conduct business from the Minnesota Secretary of State;

✓ N. An application for facilities-based authority must include a description of the applicant's facilities and the location or proposed location of those facilities; and

✓ O. Other information needed to demonstrate that the applicant has the managerial, technical, and financial ability to provide the services it intends to offer consistent with the requirements of this chapter and applicable law including the following:

✓ i. All applicants must have a toll-free number required pursuant to Minn. Rules pt. 7812.0300, subpt. 3(G).

____ Toll free number has been called.

✓ 1 Toll-free number is operational. 507-642-3114 for Madelia 507-354-4191 for New Ulm

___ 2. Toll-free number is not operational. Explain: 612-522-2000 for Metro Area

✓ Company states that toll free number will appear on customer bills.

✓ ii. All applications must include a description of the extent to which the applicant has had any civil, criminal, or administrative action against it in connection with the applicant's provision of telecommunications services.

✓ iii. All applications for authority to provide local service must be served on the Department, the OAG-RUD, the Department of Administration, persons certified to provide telecommunications service within the petitioner's designated service area, and the city clerk, or other official authorized to receive service or notice on behalf of the municipality, of all municipalities within the petitioner's designated service area in compliance with Minn. Rules pt. 7812.0200, subpt. 6.

____ iv. Applicants requesting authority to provide local exchange service must file a 911 plan that complies with the requirements of Minn. Rules pt. 7812.0550.

____ 911 checklist is satisfactory

✓ v. Applicants requesting authority to provide local exchange service must agree to offer the following services to all customers pursuant to Minn. Rules pt. 7812.0600 (basic service requirements):

✓ single party voice-grade service and touch-tone capability;

✓ 911 or enhanced 911 access;

✓ 1 + intraLATA and interLATA presubscription and code-specific equal access to interexchange carriers subscribing to its switched access service;

✓ access to directory assistance, directory listings, and operator services;

✓ toll and information service-blocking capability without recurring monthly charges as provided in the Commission's ORDER REGARDING LOCAL DISCONNECTION AND TOLL BLOCKING CHARGES, Docket No.

Company:
Docket No.: P6365/NA-04-332

P999/CI-96-38 (June 4, 1996), and its ORDER GRANTING TIME EXTENSIONS AND CLARIFYING ONE PORTION OF PREVIOUS ORDER, Docket No. P999/CI-96-38 (September 16, 1996);

✓ one white pages directory per year for each local calling area, which may include more than one local calling area, except where an offer is made and explicitly refused by the customer;

✓ a white pages and directory assistance listing, or, upon customer request, a private listing that allows the customer to have an unlisted or unpublished telephone number;

✓ call-tracing capability according to chapter 7813;

✓ tariff language on blocking capability according to the Commission's ORDER ESTABLISHING CONDITIONS FOR THE PROVISION OF CUSTOMER LOCAL AREA SIGNALING SERVICES, Docket No. P999/CI-92-992 (June 17, 1993) and its ORDER AFTER RECONSIDERATION, Docket No. P999/CI-92-992 (December 3, 1993); and

✓ telecommunications relay service capability or access necessary to comply with state and federal regulations.

✓ A Separate flat rate service offering. At a minimum, each local service provider (LSP) shall offer the services identified in Minn. Rules pt. 7812.0600, subpt. 1 as a separate tariff or price list offering on a flat rate basis. An LSP may also offer basic local service on a measured rate basis or in combination with other services. An LSP may impose separate charges for the services set forth in subpart 1 only to the extent permitted by applicable laws, rules, and Commission Orders.

✓ Service area obligations: A LSP shall provide its local services on a nondiscriminatory basis, consistent with its certificate under part 7812.0300 or 7812.0350, to all customers who request service and whose premises fall within the carrier's service area boundaries or, for an interim period, to all requesting customers whose premises fall within the operational areas of the local service provider's service area under part 7812.0300, subpart 4, or 7812.0350, subpart 4. The obligation to provide resale services does not extend beyond the service capability of the underlying carrier whose service is being resold. The obligation to provide facilities-based services does not require an LSP that is not an eligible telecommunications carrier (ETC) to build out its facilities to customers not abutting its facilities or to serve a customer if the local service provider cannot reasonably obtain access to the point of demarcation on the customer's premises.

✓ Service disconnection. An LSP may disconnect a customer's basic local service as allowed under parts 7810.1800 to 7810.2000, except that it shall not disconnect basic local service for nonpayment of toll or information service charges or any service other than basic local service.

✓ A competitive local exchange carrier shall offer each end user at least one flat rate calling area that matches the flat rate calling area offered that customer by the local exchange carrier under Minn. Rules pt. 7812.0900, subpt. 1, including any applicable extended area service (pursuant to Minn. Rules pt. 7812.0800, subpt. 1).

✓ Minn. Rules pt. 7812.1000 requires that a notice of customer rights be sent to subscribers. At the time service is initiated, at least annually thereafter, and upon customer request, a local service provider (LSP) shall provide

Company:
Docket No.: P6365/NA-04-332

customers with a summary, in plain language, of the rights and obligations of customers as provided in items A to D as follows: (A) The notice must describe the complaint procedures available through the LSP and the Commission, and must indicate that the customer can contact the Commission if dissatisfied with the local service provider's resolution of the customer's complaint. The notice must specify the current address and the local and toll-free telephone numbers of the Commission's Consumer Affairs office. (B) The notice must describe the customer's rights regarding the payment of bills, disconnection of service, privacy, deposits, low-income assistance, hearing-impaired programs, and blocking options. (C) The notice must summarize the Commission's service quality standards and the remedies available to customers for failure to meet those standards. (D) The notice must specify the price and service options as required by Minnesota Statutes, section 237.66.

___ Other issues (specify) _____

IV. RECOMMENDATION OF THE DEPARTMENT

✓ A. Find that applicant possesses the managerial, technical, and financial abilities required under Minnesota law to provide telecommunications services.

✓ B. Grant a conditional certification of authority to provide the following services:

✓ i. Facilities-based local exchange company

___ a. Exchanges served by Citizens Telecommunications of Minnesota Inc.
___ statewide
___ other (specify exchanges) _____

✓ b. Exchanges served by Qwest Corporation
___ statewide
✓ other (specify exchanges) Bloomington, Eden Prairie, Edina, Fridley, Hopkins, Minneapolis, Minnetonka, Richfield, St. Louis Park, ~~Shakopee~~

✓ c. Exchanges served by Sprint Minnesota
___ statewide
✓ other (specify exchanges) Carver, Chaska

✓ d. Exchanges served by Frontier Communications of Minnesota
___ statewide
✓ other (specify exchanges) Jordan

___ e. Exchanges served by the following incumbent local exchange companies:
Christianson Communications, Lakedale, and New Prague Telecom
___ statewide
✓ other (specify exchanges) Madelia, New Ulm, New Prague

___ ii. Resale of local exchange service

___ a. Exchanges served by Citizens Telecommunications of Minnesota Inc.
___ statewide

Company:
Docket No.: P6365/NA-04-332

_____ other (specify exchanges) _____

____b. Exchanges served by Qwest Corporation
_____ statewide
_____ other (specify exchanges) _____

____c. Exchanges served by Sprint Minnesota
_____ statewide
_____ other (specify exchanges) _____

____d. Exchanges served by Frontier Communications of Minnesota
_____ statewide
_____ other (specify exchanges) _____

____e. Exchanges served by the following incumbent local exchange companies:
_____
_____
_____ statewide
_____ other (specify exchanges) _____

✓ iii. Long Distance Service
✓ a. Statewide
____b. Other (specify)

____iv. Local Niche Service
____a. Statewide
____b. Other (specify)

____C. Grant an operational certificate of authority to provide the following services:

____i. Facilities-based local exchange company (not subject to standing Order)
____a. Exchanges served by Citizens Telecommunications of Minnesota Inc.
_____ statewide
_____ other (specify exchanges) _____

____b. Exchanges served by Qwest Corporation
_____ statewide
_____ other (specify exchanges) _____

____c. Exchanges served by Sprint Minnesota
_____ statewide
_____ other (specify exchanges) _____

____d. Exchanges served by Frontier Communications of Minnesota
_____ statewide
_____ other (specify exchanges) _____

____e. Exchanges served by the following incumbent local exchange companies:
_____
_____
_____ statewide
_____ other (specify exchanges) _____

____ii. Resale of local exchange service
____a. Exchanges served by Citizens Telecommunications of Minnesota Inc.
_____ statewide
_____ other (specify exchanges) _____

____b. Exchanges served by Qwest Corporation

Company:
Docket No.: P6365/NA-04-332

____ii. Resale of local exchange service

____a. Exchanges served by Citizens Telecommunications of Minnesota Inc.

_____ statewide

_____ other (specify exchanges) _____

____b. Exchanges served by Qwest Corporation

_____ statewide

_____ other (specify exchanges) _____

____c. Exchanges served by Sprint Minnesota

_____ statewide

_____ other (specify exchanges) _____

____d. Exchanges served by Frontier Communications of Minnesota

_____ statewide

_____ other (specify exchanges) _____

____e. Exchanges served by the following incumbent local exchange companies:

_____

_____

_____ statewide

_____ other (specify exchanges) _____

____iii. Long Distance Service

____ a. Statewide

____ b. Other (specify)

____iv. Local Niche Service

____a. Statewide

____b. Other (specify)

____D. Require the applicant to fulfill the following conditions for approval of operational certification:

✓1. Filing of tariff

____2. Filing of interconnection agreement

✓3. Filing of 911 plan

____4. Filing of certificate from Minnesota Secretary of State

____5. Filing of service area map

____6. Filing of narrative description of service area

____7. Filing of toll-free number

____8. Filing of the following information: _____

_____

____9. Filing containing the following tariff revisions: _____

_____

_____

_____

BEFORE THE NEBRASKA PUBLIC SERVICE COMMISSION

In the Matter of the Application of Time Warner Cable Information Services, LLC d/b/a Time Warner Cable, Nebraska for a Certificate of Authority to Provide Local and Interexchange Voice Services within the State of Nebraska.	)	Application No. C-3228 Applicant Time Warner's Responses and Objections to the Data Requests of Commission Staff and Interveners

COMES NOW the Applicant Time Warner Cable Information Services, LLC d/b/a Time Warner Cable ("Time Warner"), and submits the following Responses and Objections to the Data Requests of Commission Staff and Interveners:

Pursuant to Paragraph 12 of the "Definitions and Instructions" section of the Commission Staff and Interveners Data Requests to Applicant, Time Warner states that the persons answering each Data Request set forth below are Travis S. Tyler and Julie Y. Patterson. Further, pursuant to Paragraph 12 of the "Definitions and Instructions" section of the Commission Staff and Interveners Data Requests to Applicant, Time Warner states that Julie Y. Patterson is prepared to testify concerning the matters contained in each response set forth below.

Request No. 1: Please state the name, job position, address and telephone number of each and every person who provided responses in this discovery request.

Response No. 1:

Julie Y. Patterson
Vice President and Chief Counsel, Telephony
Time Warner Cable Inc.
290 Harbor Drive
Stamford, CT 06902
(203) 328-0671

Travis S. Tyler
Attorney for Applicant
Fraser, Stryker, Meusey, Olson, Boyer & Bloch, P.C.

Exhibit
13
Lu 8-18-05

500 Energy Plaza
400 S. 17th Street
Omaha, NE 68102
(402) 978-5233

Request No. 2: Please describe in detail the engineering standards Time Warner is going to use to design and monitor its network for local and interexchange services in the State of Nebraska.

Response No. 2:

Time Warner will provide service utilizing voice over Internet Protocol ("VoIP") technology. Customers will have the functionality and appearance of conventional telephone service, including enhanced 9-1-1 emergency service access. Time Warner will convert analog voice signals to digital data that will be sent over the Time Warner data network as digital data signals. Time Warner's switches will identify voice traffic and route it to Time Warner's partner, Sprint Communications Corporation ("Sprint"), which will convert the digital traffic back to analog voice signals then route them through Sprint's switches to the public switched telephone network ("PSTN") for delivery as local, long distance, or 9-1-1 calls. Accordingly, the network utilized to provide the proposed services will, in part, be that operated and maintained by Sprint.

The Time Warner network consists of 750 Mhz hybrid fiber-coaxial cable facilities. The network and associated equipment used to provide the proposed services have been engineered in accordance with DOCSIS® (Data Over Cable Service Interface Specification), which was developed by CableLabs and which defines interface requirements for cable modems involved in high-speed data distribution over cable television system networks. The DOCSIS specifications have been formally approved by national, regional, and international standards development organizations such as the Society for Cable Telecommunications Engineers (SCTE), the European Telecommunications Standards Institute (ETSI), and the International Telecommunications Union (ITU).

In addition, the Time Warner network and associated equipment used to provide the proposed services have been engineered in accordance with PacketCable, which is a CableLabs-led initiative that has developed interoperable

interface specifications for delivering VoIP based services over two-way cable plant. Built on top of the DOCSIS high-speed data infrastructure, PacketCable networks use Internet protocol (IP) technology to provide the proposed voice services.

Additional information regarding PacketCable networks can be found at http://www.packetcable.com/downloads/SCTE02_VOIP_Services.pdf

Request No. 3: Please describe the emergency procedures Time Warner would use in the event of a power loss at the customer premise, network between customer premise and the head office, and at the Time Warner head office. If your answer includes reliance on the underlying carrier, please identify the underlying carrier, the emergency procedures of the underlying carrier and state whether the underlying carrier has a route redundant network.

Response No. 3:

Time Warner discloses to customers that Digital Phone does not include an in-home back-up power source and that, as is the case with electric powered cordless phones, should there be a power outage, the proposed services will not be available. However, Time Warner's cable facilities, nodes, and headend facilities are all equipped with back up power (generally four (4) hours), as well as diesel-powered generators to provide power in the event of emergencies.

Request No. 4: Please describe the manner in which Time Warner intends to determine how remittances to the Nebraska Universal Service Fund (NUSF) will be calculated for packaged, bundled or promotional service offerings and describe the allocation method that Time Warner will use to determine intrastate versus interstate telecommunications services.

Response No. 4:

Time Warner intends to remit contributions to the Nebraska Universal Service Fund (NUSF) based on an allocation of its bundled intrastate/interstate service offering that Time Warner will propose to the Nebraska Public Service Commission for its approval. To that end, Time Warner intends to propose to the Nebraska Public Service

Commission that its NUSF remittances be based on the allocation adopted by the Federal Communications Commission for bundled wireless services, namely that 28.5% of Time Warner's bundled service offering be allocated as interstate revenue and 71.5% of Time Warner's bundled service offering be allocated as intrastate revenue.

Request No. 5: Please describe in detail the relationship between Time Warner and the underlying local exchange carrier referred to in Exhibit J and your "competitive LEC partner" identified in Exhibit E to the Application and produce copies of any and all documents evidencing such relationship.

Response No. 5:

Time Warner will be working with Sprint Communications Corporation ("Sprint") in order to provide the proposed services. When calls made to and by end users not served by Time Warner must traverse the public switched telephone network ("PSTN"), Time Warner completes those calls through its relationship with Sprint. Through that relationship, Sprint provides to Time Warner a variety of services relating to the provisioning of the proposed services to customers; the termination of IP voice traffic to the PSTN; the delivery of Enhanced 911 service; Operator Services and Directory assistance; assistance with local number portability; carriage of long distance traffic; administration of intercarrier compensation; administration of numbering resources; and directory listings.

Time Warner objects to the foregoing request, inasmuch as it seeks production of "any and all documents" evidencing Time Warner's "relationship" with Sprint; such a request is overly broad, unduly burdensome, and not reasonably calculated to lead to the discovery of information relevant to Time Warner's Application. Further, such a request would require the disclosure of information considered privileged and confidential by both Time Warner and Sprint.

Request No. 6: Please explain the source of Time Warner's numbering resources and, if such resources will be received from the underlying local exchange carriers' switch, please identify the local exchange carriers and switch locations.

Response No. 6:

Time Warner will obtain numbering resources through Sprint Communications Corporation. Sprint Communications Corporation's switch is located in Omaha, Nebraska.

Request No. 7: Page 3 of the Application states that "all appropriate intercarrier compensation will be paid on calls originating from Time Warner's network, and all jurisdictional determinations and payments in this regard will be made in accordance with existing compensation regimes." Please complete the following chart concerning the payment of intercarrier compensation and the actual method for routing calls to and from Time Warner customers:

Calling Party Customer and Location	**Terminating Party Customer and Location**	**Compensation Paid by Who to Whom (including estimated rate)**	**Description of Physical connection of Networks. Include at least: a) Physical location of planned Point of Interconnection ("POI"); b) Party Responsible for transporting call to POI; and c) Planned rate of compensation.**
Time Warner Lincoln, NE	Time Warner Nebraska City, NE	No Compensation Due	Time Warner's network will be used for the transport of the entire call
Time Warner Lincoln, NE	Other LEC Lincoln, NE	Compensation paid by Sprint Communications Corporation ("Sprint") to Other LEC in accordance with the applicable interconnection agreement	a) POI between Sprint and Other LEC in accordance with the applicable interconnection agreement; b) Sprint; c) compensation paid by Sprint to Other LEC in accordance with the applicable interconnection agreement

Calling Party Customer and Location	**Terminating Party Customer and Location**	**Compensation Paid by Who to Whom (including estimated rate)**	**Description of Physical connection of Networks. Include at least: a) Physical location of planned Point of Interconnection ("POI"); b) Party Responsible for transporting call to POI; and c) Planned rate of compensation.**
Other LEC Lincoln, NE	Time Warner Lincoln, NE	Compensation paid by Other LEC to Sprint in accordance with the applicable interconnection agreement	a) POI between Sprint and Other LEC in accordance with the applicable interconnection agreement; b) Other LEC; c) compensation paid by Other LEC to Sprint in accordance with the applicable interconnection agreement
Time Warner Falls City, NE	Other LEC Falls City, NE	Compensation paid by Sprint to Other LEC in accordance with the applicable interconnection agreement	a) POI between Sprint and Other LEC in accordance with the applicable interconnection agreement; b) Sprint; c) compensation paid by Sprint to Other LEC in accordance with the applicable interconnection agreement

Calling Party Customer and Location	**Terminating Party Customer and Location**	**Compensation Paid by Who to Whom (including estimated rate)**	**Description of Physical connection of Networks. Include at least: a) Physical location of planned Point of Interconnection ("POI"); b) Party Responsible for transporting call to POI; and c) Planned rate of compensation.**
Other LEC Falls City, NE	Time Warner Falls City, NE	Compensation paid by Other LEC to Sprint in accordance with the applicable interconnection agreement	a) POI between Sprint and Other LEC in accordance with the applicable interconnection agreement; b) Other LEC; c) compensation paid by Other LEC to Sprint in accordance with the applicable interconnection agreement
Time Warner Lincoln, NE	Other LEC Imperial, NE	Compensation paid by Sprint to Other LEC in accordance with the applicable interconnection agreement	a) POI between Sprint and Other LEC in accordance with the applicable interconnection agreement; b) Sprint; c) compensation paid by Sprint to Other LEC in accordance with the applicable interconnection agreement

Calling Party Customer and Location	**Terminating Party Customer and Location**	**Compensation Paid by Who to Whom (including estimated rate)**	**Description of Physical connection of Networks. Include at least: a) Physical location of planned Point of Interconnection ("POI"); b) Party Responsible for transporting call to POI; and c) Planned rate of compensation.**
Other LEC Imperial, NE	Time Warner Lincoln, NE	Compensation paid by Other LEC to Sprint in accordance with the applicable interconnection agreement	a) POI between Sprint and Other LEC in accordance with the applicable interconnection agreement; b) Other LEC; c) compensation paid by Other LEC to Sprint in accordance with the applicable interconnection agreement
Time Warner Customer Using Internet Access Point in Des Moines, IA	Other LEC customer in Lincoln, NE	Time Warner does not provide service to customers in Des Moines, IA, and, accordingly, calls cannot be made by any Time Warner customer in Des Moines, IA.	Not Applicable

Calling Party Customer and Location	Terminating Party Customer and Location	Compensation Paid by Who to Whom (including estimated rate)	Description of Physical connection of Networks. Include at least: a) Physical location of planned Point of Interconnection ("POI"); b) Party Responsible for transporting call to POI; and c) Planned rate of compensation.
Other LEC customer in Lincoln, NE	Time Warner Customer Using Internet Access Point in Des Moines, IA	Time Warner does not provide service to customers in Des Moines, IA, and, accordingly, calls cannot be made to any Time Warner customer in Des Moines, IA.	Not Applicable

Request No. 8: Do you acknowledge that all of the obligations imposed on local exchange carriers pursuant to 47 U.S.C. §251 apply to Time Warner? If you do not so acknowledge, explain why not and specifically list the obligations that you contend do not apply to Time Warner.

Response No. 8:

As stated in Section II of the Application, Time Warner does not acknowledge or agree that its VoIP services constitute telecommunications services or local exchange services or that entities providing such services are local exchange carriers subject to the provisions of 47 U.S.C. § 251. However, until the Federal Communications Commission or the Nebraska Public Service Commission provides clarification on the regulatory treatment of VoIP services, Time Warner intends to abide by all of the obligations imposed on local exchange carriers pursuant to 47 U.S.C. §251 and all other applicable rules and regulations

governing local and long distance telecommunications service in the State of Nebraska.

Request No. 9: On page 2 of the Application, Time Warner states that it "intends to comply with the applicable rules and regulations governing local and long distance telecommunications service in the State of Nebraska." Additionally on page 12 of the Application, Time Warner states that "[s]ubject to its reservation of rights set forth in this Application, Applicant agrees that it will adhere to all state laws and all Commission policies and rules and orders." With relation to telecommunications services, please identify all state laws and all Commission policies, rules, and orders with which Time Warner will not unqualifiably comply.

Response No. 9:

See the Response to Request No. 8 above.

Request No. 10: If the Commission denies the Application filed by Time Warner, what are Time Warner's intentions regarding provision of the services set forth in the Application?

Response No. 10: Time Warner objects to the foregoing Data Request because the same is not reasonably calculated to lead to the discovery of data or information relevant to the subject Application.

Request No. 11: On page 3 of the Application, Time Warner states that it "will contribute to the federal and state Universal Service Funds in accordance with applicable law." Additionally, the Application states that "TWCIS' IP voice services will fully comply with all requirements applicable to telecommunications services including all applicable E911 obligations, CALEA, Universal Service, and Telephone Relay Service requirements." Please state, for each of the following, how Time Warner plans to calculate the amount upon which surcharges and taxes will be paid by Time Warner. For example, is this amount calculated based upon the total amount billed to a Time Warner customer or is the amount calculated based upon the percentage of calls that are transmitted to the Public Switched Telephone Network?

Types of Taxes and Surcharges

Relay Surcharge
911 Service
Nebraska Universal Service
Federal Tax
State Tax
City Tax
City Occupation Tax
Federal Universal Service

Response No. 11:

Time Warner objects to the foregoing request as vague, overly broad, and unduly burdensome.

Without waiving said objection, Time Warner states that for each of the above-listed Taxes and Sur-charges, Time Warner will remit the appropriate taxes and fees based upon the entire monthly charge for the proposed services and will not limit such calculation to the percentage of calls transmitted to the Public Switched Telephone Network.

Request No. 12: The news media has reported the potential for VOIP "spam," whereby telemarketers could send messages to thousands of VOIP consumers at once. Is VOIP "spam" technically possible and if VOIP "spam" is possible what steps has Time Warner taken to prevent such from occurring to their customers?

Response No. 12:

Time Warner objects to the foregoing request because the same is vague and is not reasonably calculated to lead to the discovery of data or information relevant to the subject Application.

Without waiving said objection, Time Warner states that it will provide the proposed services utilizing voice over Internet Protocol ("VoIP") technology, its own managed IP network, and, where necessary, the Public Switched Telephone Network. Calls will not traverse the public "Internet" and will remain on either Time Warner's network or the Public Switched Telephone Network. In the case of the proposed services, because Time Warner controls its provision of services and its network, it would not be possible for telemarketers to send messages to multiple Time Warner customers at once.

Request No. 13: Is the technology used by Time Warner portable? For example, can a customer use its Time Warner "phone" from more than one internet access point?

Response No. 13:

The proposed services are not provided through any Internet access point. The proposed services are not portable and can be accessed only at a subscriber's service address.

Request No. 14: How does Time Warner determine the situs of a customer?

Response No.14:

Time Warner provides the proposed services to residential subscribers, who can access the services with any telephone in their home. The subscriber's situs is his or her residential address.

Request No. 15: What communications services does Time Warner plan on providing in Nebraska, other than VoIP?

Response No. 15: Time Warner objects to the foregoing Data Request because the same is not reasonably calculated to lead to the discovery of data or information relevant to the subject Application.

Without waiving said objection, Time Warner states that it currently does not have any plans for the provision of communications services other than VoIP in Nebraska.

Request No. 16: Please provide a copy of every order granting a Time Warner or any affiliate CLEC authority within the last three years.

Response No. 16:

See attached orders granting Time Warner such authority in the following states: Texas (TW001-TW007); California (TW008-TW026); North Carolina (TW027-TW035); South Carolina (TW036-TW060); Minnesota (TW061-TW062); Wisconsin (TW063-TW079); Ohio (TW080-TW084); New Hampshire (TW085-TW088); Missouri (TW089-TW0102); Maine (TW0103-TW0109); and Kansas (TW0110-TW0129).

Dated: September 1, 2004.

TIME WARNER CABLE INFORMATION SERVICES (NEBRASKA), LLC

Applicant.

BY: _____

Travis S. Tyler (#21101)
Fraser, Stryker, Meusey, Olson, Boyer & Bloch, P.C.
500 Energy Plaza
409 S. 17th Street
Omaha, Nebraska 68102
(402) 978-5233
fax: (402) 341-8290

CERTIFICATE OF SERVICE

The undersigned hereby certifies that a true and correct copy of the foregoing was served upon the following by electronic mail and United States regular mail, postage prepaid, on this 1st day of September, 2004:

Shanice L. Knutson
Communications Department
Nebraska Public Service Comm.
301 South 13th St, Ste 500
300 The Atrium Building
1200 N Street
Lincoln, NE 68508
(402) 471-3101
sknutson@mail.state.ne.us

James A. Overcash
Woods & Aitken, LLP
Lincoln, NE 68508
(402) 437-8500
jovercash@woodsaitken.com

Jack L. Shultz
Harding, Shultz & Downs
800 Lincoln Square
121 South 13th Street
P.O. Box 82028
Lincoln, NE 68501-2028
(402) 434-3000
jshultz@hsdlegal.com

Mark A. Fahleson
Rembolt Ludtke LLP
1201 Lincoln Mall,#102
Lincoln, NE 68508
(402) 475-5100
mfahleson@remlud.com

0847

Jill Vinjamuri Gettman
Kutak Rock LLP
The Omaha Building
1650 Farnam Street
Omaha, NE 68102
(402) 231-8790
jill.gettman@kutakrock.com

Travis S. Tyler

361959

BEFORE THE NEBRASKA PUBLIC SERVICE COMMISSION

In the Matter of the Application of Time Warner Cable Information Services, LLC d/b/a Time Warner Cable, Nebraska for a Certificate of Authority to Provide Local and Interexchange Voice Services within the State of Nebraska.	))))))))	Application No. C-3228 Applicant Time Warner's Supplemental Responses and Objections to the Data Requests of Commission Staff and Interveners

COMES NOW the Applicant Time Warner Cable Information Services, LLC d/b/a Time Warner Cable ("Time Warner"), and submits the following Supplemental Responses and Objections to the Data Requests of Commission Staff and Interveners:

Request No. 6: Please explain the source of Time Warner's numbering resources and, if such resources will be received from the underlying local exchange carriers' switch, please identify the local exchange carriers and switch locations.

Response No. 6:

Time Warner will obtain numbering resources through Sprint Communications Corporation. Sprint Communications Corporation's switch is located in Kansas City, Kansas.

Dated: September 2, 2004.

TIME WARNER CABLE INFORMATION SERVICES (NEBRASKA), LLC

Applicant.

BY: _____

Travis S. Tyler (#21101)
Fraser, Stryker, Meusey, Olson, Boyer & Bloch, P.C.
500 Energy Plaza
409 S. 17th Street
Omaha, Nebraska 68102
(402) 978-5233
fax: (402) 341-8290

SEP 2004
RECEIVED
WOODS, AITKEN

CERTIFICATE OF SERVICE

The undersigned hereby certifies that a true and correct copy of the foregoing was served upon the following by electronic mail and United States regular mail, postage prepaid, on this 2nd day of September, 2004:

Shanice L. Knutson
Communications Department
Nebraska Public Service Comm.
301 South 13th St, Ste 500
300 The Atrium Building
1200 N Street
Lincoln, NE 68508
(402) 471-3101
sknutson@mail.state.ne.us

James A. Overcash
Woods & Aitken, LLP
Lincoln, NE 68508
(402) 437-8500
jovercash@woodsaitken.com

Jack L. Shultz
Harding, Shultz & Downs
800 Lincoln Square
121 South 13th Street
P.O. Box 82028
Lincoln, NE 68501-2028
(402) 434-3000
jshultz@hsdlegal.com

Mark A. Fahleson
Rembolt Ludtke LLP
1201 Lincoln Mall,#102
Lincoln, NE 68508
(402) 475-5100
mfahleson@remlud.com

Jill Vinjamuri Gettman
Kutak Rock LLP
The Omaha Building
1650 Farnam Street
Omaha, NE 68102
(402) 231-8790
jill.gettman@kutakrock.com

Travis S. Tyler

362157